D-116735

REVISIONS				
ZONE	REV	DESCRIPTION	DATE	APPROVED

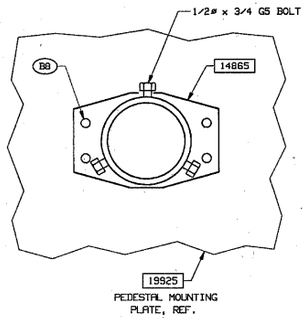

SECTION C-C
3"=1'-0"

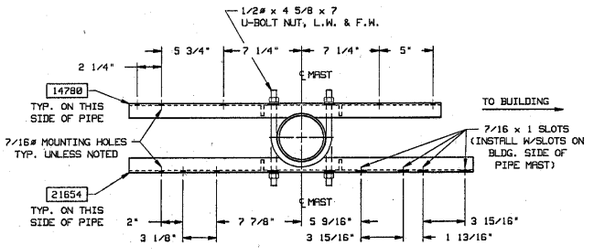

SECTION F-F
USE FOR 10M, 20M AND 30M TOWERS
2"=1'-0"

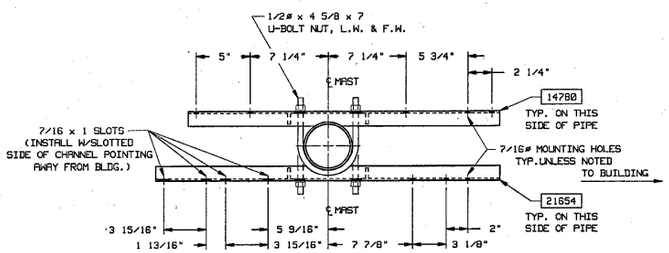

SECTION F-F
USE FOR 15M AND 25M TOWERS
2"=1'-0"

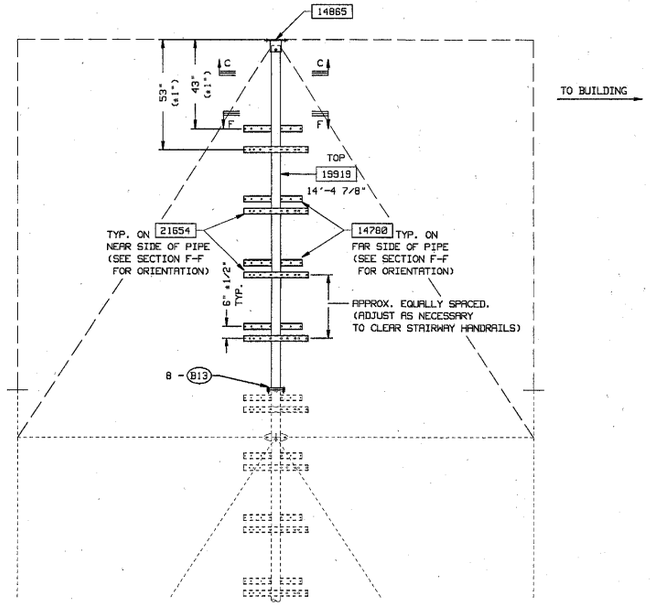

ELEVATION
3/8"=1'-0"

PARTS LIST			PART NO.: 33-WG-MAST-TOP	
MARK	DESCRIPTION	LENGTH	WEIGHT	REQ'D
14780	C 3 x 4.1 WELDMENT	2'-5"	10#	4
14865	PIPE 5 9/16 O.D. x 0.375 WALL WELDMENT	6"	16#	1
19919	PIPE 4 1/2 O.D. x 0.237 WALL WELDMENT	14'-4 7/8"	144#	1
21654	C 3 x 4.1 WELDMENT	2'-8"	11#	4

HARDWARE LIST	PART NO.: 33-WG-MAST-TOP-HDW	
SYM.	REQ'D	DESCRIPTION
B8	4	5/8# x 2 A325 BOLT, NUT & L.W.
B13	8	5/8# x 3 1/4 A325 BOLT, NUT & L.W.
—	3	1/2# x 3/4 G5 BOLT
—	8	1/2# x 4 5/8 x 7 U-BOLT ASS'Y

TOTAL GALVANIZED WEIGHT = 250#

MODULE PART NO.: 33-WG-MAST-TOP-KIT
IDENTIFICATION CODE: WHITE TRIANGLE-2 10M-30M TOWERS

NEXT ASSY.	USED ON
	D-116714
	D-116715
	D-116716
	D-116717
	D-116718

APPLICATION

UNLESS OTHERWISE STATED DIMENSIONS ARE IN INCHES
TOLERANCES ON
FRACTIONS ± 1/16 DECIMALS .XX± — .XXX± — ANGLES ± 30'

CONTRACT NO. RA1330-02-CN-0015
MICROFLECT SALES ORDER 15970-02
DRAWN BY PDC DATE 21JAN03
CHECKED BY SM DATE 13FEB03
REVIEWED BY DATE

valmont MICROFLECT
3575 25th STREET S.E.
SALEM, OREGON 97302
PHONE: 503-363-9267
FAX: 503-316-2040

W/G MAST TOP SECTION
NEXRAD WSR-88D RADAR TOWER
NOAA/NATIONAL WEATHER SERVICE

SIZE D FSCM NO. 29189 DWG NO. D-116735 REV —
SCALE —— SHEET 1 OF 1