ZONE	REV	DESCRIPTION	DATE	APPROVED
		REVISIONS		

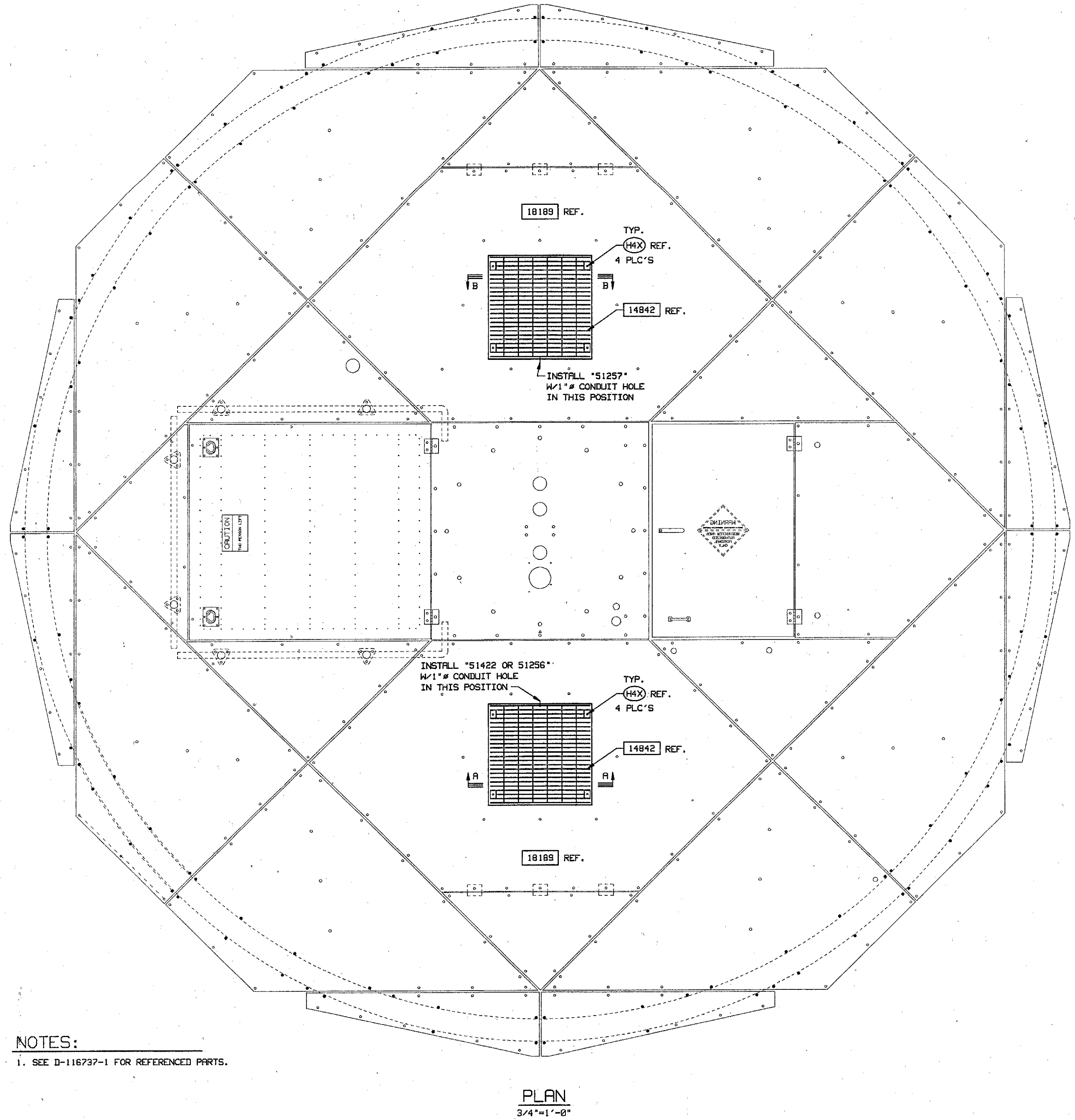

PLAN
3/4"=1'-0"

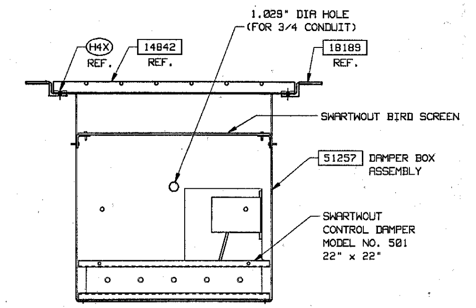

SECTION B-B
1 1/2"=1'-0"

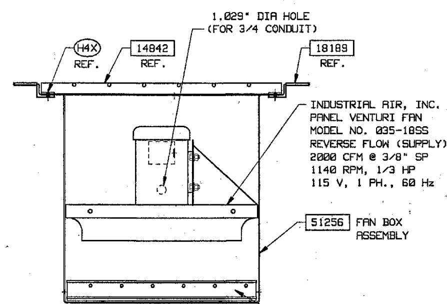

SECTION A-A
USE FOR STANDARD TOWERS
1 1/2"=1'-0"

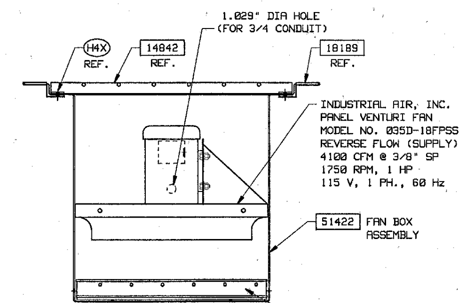

SECTION A-A
USE FOR TOWERS WITH TONED DOWN PAINT
1 1/2"=1'-0"

HARDWARE LIST

PART NO.: 33-FAN-BOXES

SYM.	REQ'D	DESCRIPTION
51257	1	DAMPER BOX ASSEMBLY
51256	1	FAN BOX ASSEMBLY (FOR STANDARD TOWERS) -OR-
51422	1	FAN BOX ASSEMBLY (FOR TOWERS WITH TONED DOWN PAINT)

NOTES:

1. SEE D-116737-1 FOR REFERENCED PARTS.

MODULE PART NO.: 33-FAN-BOXES
IDENTIFICATION CODE: GREEN TRIANGLE-2 5M-30M TOWERS

D-116737-1	
NEXT ASSY.	USED ON
APPLICATION	

UNLESS OTHERWISE STATED DIMENSIONS ARE IN INCHES

TOLERANCES ON

FRACTIONS	DECIMALS	ANGLES
± 1/16	.XX± —	± 30'
	.XXX± —	

CONTRACT NO.	RA1330-02-CN-0015		
MICROFLECT SALES ORDER	15970-02		
DRAWN BY	PDC	DATE	21JAN03
CHECKED BY	SM	DATE	13FEB03
REVIEWED BY		DATE	

valmont MICROFLECT
3575 25th STREET S.E.
SALEM, OREGON 97302
PHONE: 503-363-9267
FAX: 503-316-2040

FAN AND DAMPER BOX INSTALLATION
NEXRAD WSR-88D RADAR TOWER
NOAA/NATIONAL WEATHER SERVICE

SIZE	FSCM NO.	DWG NO.	REV
D	29189	D-116738	—
SCALE		SHEET 1 OF 1	