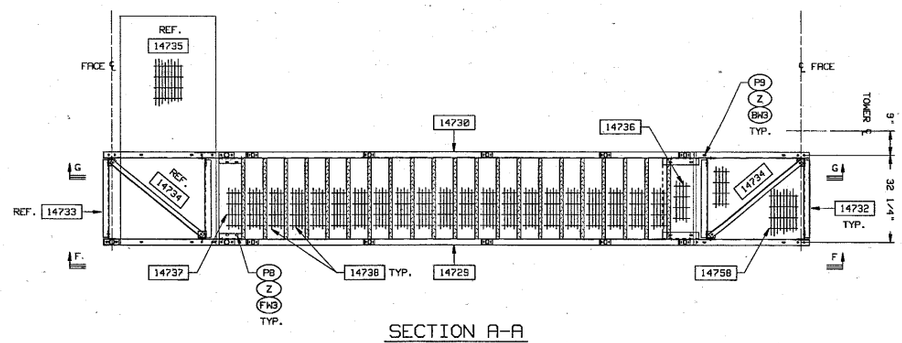

SECTION A-A
1/2"=1'-0"

NOTES:

1. ALL BOLTS (I6) UNLESS NOTED.
2. HANDRAIL CONNECTIONS USE "KEE-KLAMP" SLIP ON PIPE FITTINGS.

HARDWARE LIST PART NO.: 33-STAIRWAY-BS-HDW

SYM.	REQ'D	DESCRIPTION
A	12	SINGLE SOCKET TEE (10-8)
B	4	90° ELBOW (15-8)
C	4	ADJUSTABLE TEE (19-8)
D	1	SIDE OUTLET ELBOW (20-8)
E	1	90° SIDE OUTLET TEE (21-8)
F	8	TWO SOCKET CROSS (26-8)
G	4	SINGLE SWIVEL SOCKET (C50-68)
H	8	PIPE PLUG (B4-8)
P8	8	3/8# x 2 SOCKET HD BOLT ASS'Y
P9	4	3/8# x 2 1/4 SOCKET HD BOLT ASS'Y
H5	88	3/8# x 1 1/4 G5 BOLT, NUT & L.W.
I6	18	1/2# x 1 1/2 G5 BOLT, NUT & L.W.
I8	26	1/2# x 2 G5 BOLT, NUT & L.W.
J8	5	5/8# x 2 G5 BOLT, NUT & L.W.
FW3	52	3/8" FLAT WASHER
BW3	4	3/8" BEVEL WASHER
BW4	26	1/2" BEVEL WASHER
BW5	5	5/8" BEVEL WASHER
BW6	4	3/4" BEVEL WASHER
Z	12	"CB" GRAT CLIP W/ 7/16# HOLE
—	4	3/4# x 9" S.S. THREADED ROD
—	12	3/4# S.S. NUT
—	4	3/4# S.S. FLAT WASHER
—	4	3/4# S.S. LOCK WASHER
—	1	POURABLE GROUT - 5# BOX (59-90251)

PARTS LIST PART NO.: 33-STAIRWAY-BASE

MARK	DESCRIPTION	LENGTH	WEIGHT	REQ'D
14729	C 8 x 11.5 WELDMENT	21'-10 3/8"	364#	1
14730	C 8 x 11.5 WELDMENT	21'-10 3/8"	364#	1
14732	C 8 x 11.5 WELDMENT	2'-4 1/4"	29#	2
14734	L 1 3/4 x 1 3/4 x 1/8	3'-8 11/16"	5#	1
14736	GRATING 1 1/4 x 3/16 (19-W-4)	2'-5 1/2"	21#	1
14737	GRATING 1 1/4 x 3/16 (19-W-4)	2'-6"	22#	1
14738	STAIR TREAD 1 1/4 x 3/16 (19-W-4)	2'-6"	23#	20
14739	L 2 1/2 x 2 x 3/16	1'-0 7/8"	3#	2
14740	L 2 1/2 x 2 1/2 x 3/16	9 3/4"	2#	2
14741	PIPE 1.90 O.D. x 0.145 WALL WELDMENT	3'-8 11/16"	11#	2
14742	PIPE 1.90 O.D. x 0.145 WALL WELDMENT	1'-6 13/16"	6#	8
14743	PIPE 1.90 O.D. x 0.145 WALL WELDMENT	3'-5 1/4"	11#	2
14744	PIPE 1.90 O.D. x 0.145 WALL	20'-7 1/4"	58#	2
14745	PIPE 1.90 O.D. x 0.145 WALL	5'-5 7/8"	16#	6
14746	PIPE 1.90 O.D. x 0.145 WALL	3 1/2"	1#	4
14747	L 3 x 3 x 3/16	6 1/4"	2#	4
14748	PIPE 1.90 O.D. x 0.145 WALL	1'-8 3/8"	5#	4
14749	PIPE 1.90 O.D. x 0.145 WALL WELDMENT	3'-5 1/4"	11#	1
14751	PIPE 1.90 O.D. x 0.145 WALL	3'-5 1/4"	9#	2
14757	PIPE 1.90 O.D. x 0.145 WALL	2 1/2"	1#	4
14758	GRATING 1 1/4 x 3/16 (19-W-4)	3'-5 3/4"	93#	1

TOTAL GALVANIZED WEIGHT = 1,785#

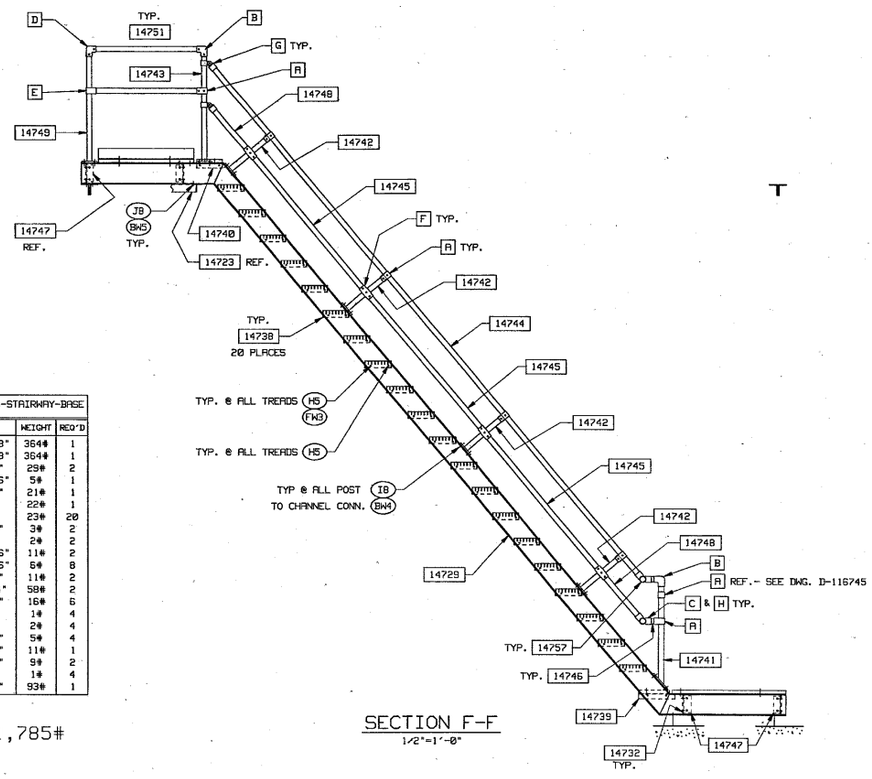

SECTION F-F
1/2"=1'-0"

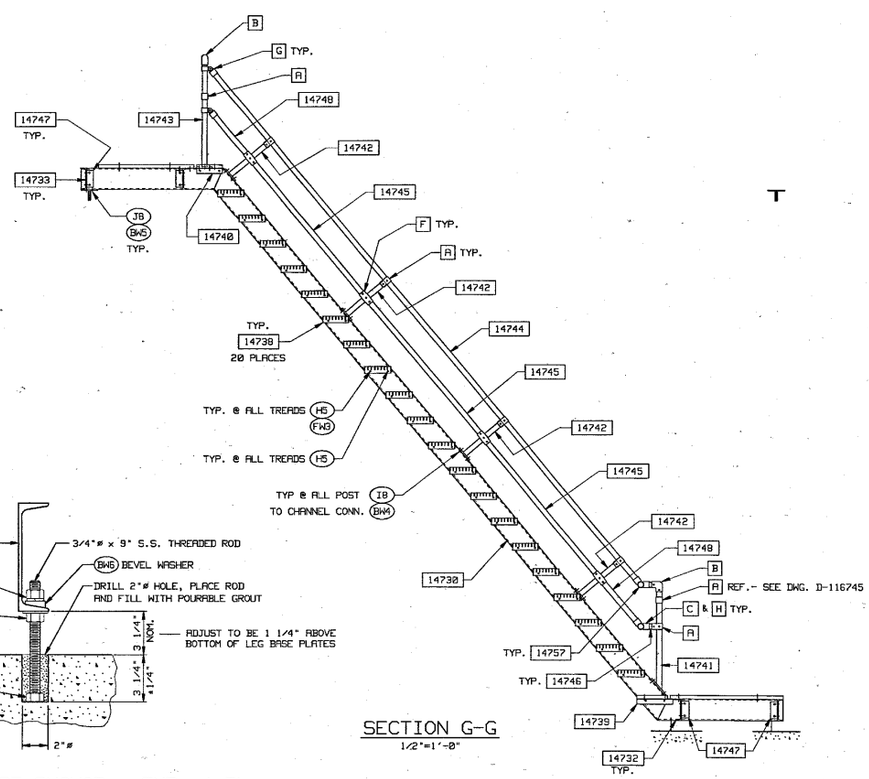

SECTION G-G
1/2"=1'-0"

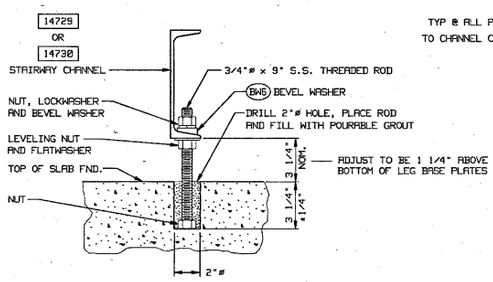

STAIRWAY BASE ANCHOR - TYP. 4 PLs.

SEE SLAB FOUNDATION DRAWING FOR LOCATION OF ANCHORS

REV	DATE	DESCRIPTION	APPROVED
		REVISIONS	

APPLICATION

USED ON	NEXT ASSY.
D-116718	
D-116717	
D-116716	
D-116715	
D-116714	

UNLESS OTHERWISE STATED DIMENSIONS ARE IN INCHES
TOLERANCES ON FRACTIONS ± 1/16 DECIMALS .XX ± — .XXX ± — ANGLES ± 30'

CONTRACT NO. RR1330-02-CN-0015
MICROFLECT SALES ORDER 15970-02
DATE 21JAN03
DRAWN BY PDC
CHECKED BY
REVISED BY
DATE 13FEB03

MODULE PART NO.: 33-STAIRWAY-BS-KIT
IDENTIFICATION CODE: ORANGE SQUARE-1

Valmont MICROFLECT
3575 25th STREET S.E.
SALEM, OREGON 97302
PHONE: 503-391-8920
FAX: 503-316-5040

STAIRWAY BASE SECTION
NEXRAD WSR-88D RADAR TOWER
NOAA/NATIONAL WEATHER SERVICE

10M-30M TOWERS

SIZE D FSCM NO. 29189
SCALE —
JOB NO. D-116741
SHEET 1 OF 1
REV —