DWG NO. D-116744 SH 1 REV —

REVISIONS				
ZONE	REV	DESCRIPTION	DATE	APPROVED

PARTS LIST

PART NO.: 33-SEC-GATE-5M

MARK	DESCRIPTION	LENGTH	WEIGHT	REQ'D
14882	PIPE 1.90 O.D. x 0.145 WALL	4"	1#	6
23593	PIPE 1.90 O.D. x 0.145 WALL	5 1/2"	2#	4
23594	PIPE 1.90 O.D. x 0.145 WALL	3'-4 1/4"	5#	2
23595	PIPE 1.90 O.D. x 0.145 WALL	5'-1 1/4"	15#	2
23596	PIPE 1.90 O.D. x 0.145 WALL	4'-10 1/2"	14#	2
23597	PIPE 1.90 O.D. x 0.145 WALL	2'-7 5/16"	7#	2
23598	PIPE 1.90 O.D. x 0.145 WALL	2'-1 15/16'	6#	2
23599	PIPE 1.90 O.D. x 0.145 WALL	6'-11 15/16'	20#	2
23600	PIPE 1.90 O.D. x 0.145 WALL	1'-6 3/4"	4#	2
23601	PIPE 1.90 O.D. x 0.145 WALL	3'-0 1/4"	8#	1
23602	PIPE 1.90 O.D. x 0.145 WALL	2'-4 3/8"	6#	2
23603	PIPE 1.90 O.D. x 0.145 WALL	6'-3"	18#	2

TOTAL GALVANIZED WEIGHT = 225#

HARDWARE LIST

PART NO.: 33-SEC-GATE-5M-HDW

SYM.	REQ'D	DESCRIPTION
A	8	SINGLE SOCKET TEE (10-8)
B	10	90° ELBOW (15-8)
C	4	ADJUSTABLE TEE (19-8)
D	2	SIDE OUTLET ELBOW (20-8)
E	2	SIDE OUTLET TEE (21-8)
L	1	GATE FORK, LOCKABLE
M	3	GATE EYE FITTING
N	3	GATE PIN FITTING
H	4	PIPE PLUG (84-8)
H7	8	3/8# x 1 3/4 GS BOLT, NUT & L.W.
—	22'	11 GA.CHAIN LINK FENCING
X	40	1 7/8"TENSION BAND W/BOLT
Y	9	82"TENSION BAR
Z	20	12 GA. x 7 1/2" FENCING TIE

NOTE:
ALL SLIP ON PIPE FITTINGS ARE "KEE-KLAMP" FITTINGS.

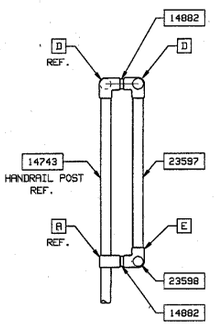

SECTION D-D
1"=1'-0"

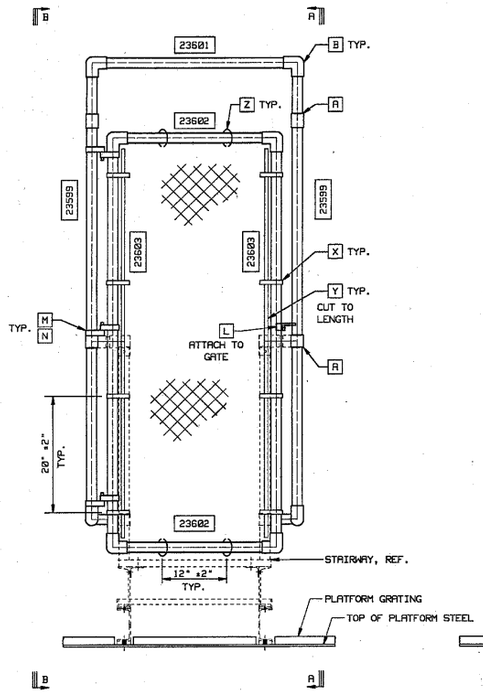

FRONT VIEW
1"=1'-0"

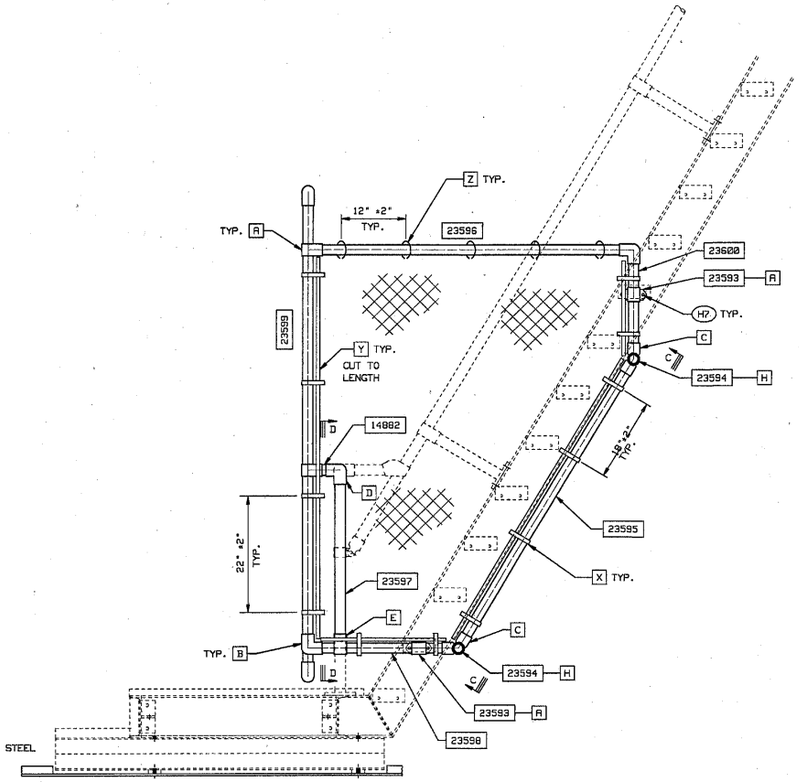

SECTION A-A
SECTION B-B (OPPOSITE)
1"=1'-0"

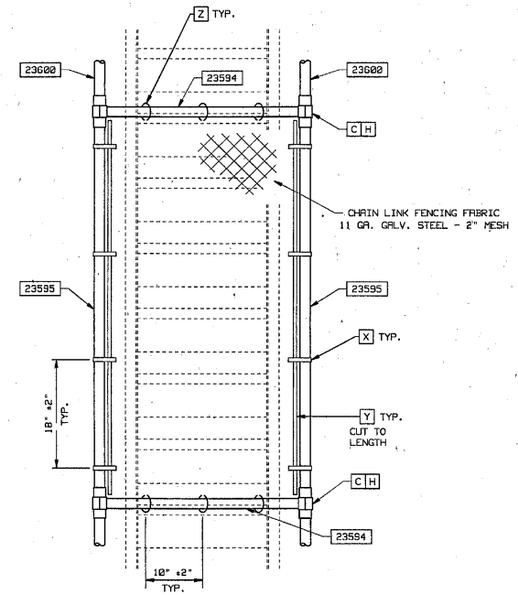

SECTION C-C
1"=1'-0"

MODULE PART NO.: 33-SEC-GATE-5M-KIT
IDENTIFICATION CODE: BLACK TRIANGLE-1 5M TOWERS

	D-116740
NEXT ASSY.	USED ON
APPLICATION	

UNLESS OTHERWISE STATED DIMENSIONS ARE IN INCHES
TOLERANCES ON
FRACTIONS ± 1/16 DECIMALS .XX± — .XXX± — ANGLES ± 30'

CONTRACT NO. RA1330-02-CN-0015
MICROFLECT SALES ORDER 15970-02
DRAWN BY PDC DATE 21JAN03
CHECKED BY SM DATE 13FEB03
REVIEWED BY DATE

valmont MICROFLECT
3575 25th STREET S.E.
SALEM, OREGON 97302
PHONE: 503-363-9267
FAX: 503-315-2948

SECURITY GATE INSTALLATION
NEXRAD WSR-88D RADAR TOWER
NOAA/NATIONAL WEATHER SERVICE

SIZE D FSCM NO. 29189 DWG NO. D-116744 REV —
SCALE — SHEET 1 OF 1