# NWS EHB 6–510
# AF TO 31P1–4–108–152
# FAA TI 6345.1 V7

**REVISION NO. 2**

**TECHNICAL MANUAL**

# MAINTENANCE INSTRUCTIONS
# RADAR DATA ACQUISITION (RDA)
# DOPPLER METEOROLOGICAL RADAR
# WSR–88D

PARAMAX CORPORATION
CONTRACT 50–DMNW–8–00032

Distribution Statement A – Approved for public release; distribution is unlimited.

PUBLISHED UNDER AUTHORITY OF THE SECRETARIES OF
COMMERCE, THE AIR FORCE, THE NAVY, AND TRANSPORTATION

**15 MAY 2002**
**CHANGE 3 – 15 JUNE 2003**

# LIST OF EFFECTIVE PAGES

INSERT LATEST CHANGED PAGES, DESTROY SUPERCEDED PAGES.

NOTE: The portion of the text affected by the changes is indicated by a vertical line in the outer margins of the page. Minor changes to illustrations are indicated by a miniature pointing hand. Extensive illustration changes and new illustrations do not have the miniature pointing hands.

Dates of issue for original and changed pages are:

Original . . . . . 0 . . . . . 15 May 2002
Change . . . . . 1 . . . . . 31 March 2003
Change . . . . . 2 . . . . . 31 May 2003
**Change . . . . . 3 . . . . . 15 June 2003**

TOTAL NUMBER OF PAGES IN THIS MANUAL IS 2508, CONSISTING OF THE FOLLOWING:

| Page No. | *Change No. | Page No. | *Change No. | Page No. | *Change No. |
|---|---|---|---|---|---|
| **Title Page** | **3** | 1–30 | 0 | 4–185 – 4–186 | 0 |
| **A – H** | **3** | 1–31 – 1–32 | 1 | 4–187 – 4–188 | 1 |
| i – vi | 0 | 1–33 – 1–35 | 0 | 4–189 – 4–192 | deleted |
| vii | 1 | 1–36 – 1–39 | 1 | 4–193 – 4–197 | 1 |
| viii – xxvii | 0 | 1–40 – 1–42 | 0 | 4–198 blank | 1 |
| xxviii | 2 | 1–43 – 1–46 | 1 | 4–199 – 4–200 | deleted |
| xxviv – xxxv | 0 | 1–47 – 1–51 | 0 | 4–201 – 4–211 | 1 |
| xxxvi | 1 | 1–52 | 1 | 4–212 blank | 1 |
| xxxvii – xlii | 0 | 1–53 | 0 | 4–213 – 4–220 | deleted |
| xliii | 2 | 1–54 blank | 0 | 4–221 | 1 |
| xliv | 0 | 2–1 | 0 | 4–222 – 4–229 | 0 |
| xlv – xlvi | 1 | 2–2 blank | 0 | 4–230 – 4–231 | 1 |
| xlvii | 0 | 3–1 | 0 | 4–232 – 4–238 | 0 |
| xlviii | 2 | 3–2 blank | 0 | 4–239 | 1 |
| xlix | 0 | 4–1 | 0 | 4–240 – 4–244 | 0 |
| l | 2 | 4–2 | 1 | 4–245 | 1 |
| li | 0 | 4–3 – 4–31 | 0 | 4–246 | 0 |
| lii – liv | 1 | 4–32 | 1 | 4–247 | 1 |
| lv | 2 | 4–33 | 0 | 4–248 – 4–271 | 0 |
| lvi – lvii | 0 | 4–34 | 1 | 4–272 | 1 |
| lviii – lxiii | 1 | 4–35 – 4–36 | 0 | 4–273 – 4–281 | 0 |
| lxiv | 0 | 4–37 – 4–38 | 1 | 4–282 blank | 0 |
| 1–1 – 1–4 | 0 | 4–39 – 4–44 | 0 | 5–1 – 5–2 | 0 |
| 1–5 – 1–7 | 1 | 4–45 – 4–46 | 1 | 5–3 – 5–4 | 1 |
| **1–8 – 1–12** | **3** | 4–47 – 4–59 | 0 | 5–5 – 5–24 | 0 |
| 1–13 | 0 | 4–60 | 1 | 5–25 – 5–27 | 1 |
| 1–14 | 1 | 4–61 – 4–70 | 0 | 5–28 – 5–36 | 0 |
| 1–15 | 0 | 4–71 – 4–72 | 1 | 5–37 | 1 |
| **1–16** | **3** | 4–73 | 0 | 5–38 – 5–71 | 0 |
| **1–16.1** | **3** | 4–74 | 1 | 5–72 | 1 |
| **1–16.2 blank** | **3** | 4–75 – 4–175 | 0 | 5–73 – 5–77 | 0 |
| **1–17 – 1–18** | **3** | 4–176 | 1 | 5–78 – 5–79 | 1 |
| 1–19 – 1–24 | 0 | 4–177 – 4–180 | 0 | 5–80 – 5–144 | 0 |
| 1–25 – 1–29 | 1 | 4–181 – 4–184 | 1 | | |

* Zero in this column indicates an original page.

# LIST OF EFFECTIVE PAGES

INSERT LATEST CHANGED PAGES, DESTROY SUPERCEDED PAGES.

| Page No. | *Change No. |
|---|---|
| 5–145 | 1 |
| 5–146 – 5–181 | 0 |
| 5–182 | 1 |
| 5–183 – 5–186 | 0 |
| 5–187 | 1 |
| 5–188 – 5–201 | 0 |
| 5–202 | 1 |
| 5–203 – 5–224 | 0 |
| 5–225 – 5–228 | 1 |
| 5–229 | 0 |
| 5–230 | 1 |
| 5–231 – 5–233 | 0 |
| 5–234 | 1 |
| 5–235 – 5–253 | 0 |
| 5–254 | 1 |
| 5–255 – 5–256 | 0 |
| 5–257 – 5–258 | 1 |
| 5–259 – 5–260 | 0 |
| FP–5–261 | 0 |
| FP–5–262 blank | 0 |
| FP–5–263 | 1 |
| FP–5–264 blank | 1 |
| FP–5–265 | 0 |
| FP–5–266 blank | 0 |
| FP–5–267 | 0 |
| FP–5–268 blank | 0 |
| FP–5–269 | 0 |
| FP–5–270 blank | 0 |
| FP–5–271 | 1 |
| FP–5–272 blank | 1 |
| FP–5–273 | 0 |
| FP–5–274 blank | 0 |
| FP–5–275 | 0 |
| FP–5–276 blank | 0 |
| FP–5–277 | 0 |
| FP–5–278 blank | 0 |
| FP–5–279 | 1 |
| FP–5–280 blank | 1 |
| FP–5–281 | 0 |
| FP–5–282 blank | 0 |
| FP–5–283 | 0 |
| FP–5–284 blank | 0 |
| FP–5–285 | 0 |
| FP–5–286 blank | 0 |
| FP–5–287 | 0 |
| FP–5–288 blank | 0 |
| FP–5–289 | 2 |
| FP–5–290 blank | 2 |
| FP–5–291 | 0 |
| FP–5–292 blank | 0 |
| FP–5–293 | 0 |
| FP–5–294 blank | 0 |
| FP–5–295 | 0 |
| FP–5–296 blank | 0 |
| FP–5–297 | 0 |
| FP–5–298 blank | 0 |
| FP–5–299 | 0 |
| FP–5–300 blank | 0 |
| FP–5–301 | 0 |
| FP–5–302 blank | 0 |
| FP–5–303 | 0 |
| FP–5–304 blank | 0 |
| FP–5–305 | 0 |
| FP–5–306 blank | 0 |
| FP–5–307 | 0 |
| FP–5–308 blank | 0 |
| FP–5–309 | 0 |
| FP–5–310 blank | 0 |
| FP–5–311 | 0 |
| FP–5–312 blank | 0 |
| FP–5–313 | 0 |
| FP–5–314 blank | 0 |
| FP–5–315 | 0 |
| FP–5–316 blank | 0 |
| FP–5–317 | 1 |
| FP–5–318 blank | 1 |
| FP–5–319 | 0 |
| FP–5–320 blank | 0 |
| FP–5–321 | 1 |
| FP–5–322 blank | 1 |
| FP–5–323 | 0 |
| FP–5–324 blank | 0 |
| FP–5–325 | 1 |
| FP–5–326 blank | 1 |
| FP–5–327 | 0 |
| FP–5–328 blank | 0 |
| FP–5–329 | 1 |
| FP–5–330 blank | 1 |
| FP–5–331 | 1 |
| FP–5–332 blank | 1 |
| FP–5–333 | 1 |
| FP–5–334 blank | 1 |
| FP–5–335 | 1 |
| FP–5–336 blank | 1 |
| FP–5–337 | 0 |
| FP–5–338 blank | 0 |
| FP–5–339 | 0 |
| FP–5–340 blank | 0 |
| FP–5–341 | 0 |
| FP–5–342 blank | 0 |
| FP–5–343 | 0 |
| FP–5–344 blank | 0 |
| FP–5–345 | 0 |
| FP–5–346 blank | 0 |
| FP–5–347 | 0 |
| FP–5–348 blank | 0 |
| FP–5–349 | 0 |
| FP–5–350 blank | 0 |
| FP–5–351 | 0 |
| FP–5–352 blank | 0 |
| FP–5–353 | 0 |
| FP–5–354 blank | 0 |
| FP–5–355 | 0 |
| FP–5–356 blank | 0 |
| FP–5–357 | 0 |
| FP–5–358 blank | 0 |
| FP–5–359 | 0 |
| FP–5–360 blank | 0 |
| FP–5–361 | 0 |
| FP–5–362 blank | 0 |
| FP–5–363 | 0 |
| FP–5–364 blank | 0 |
| FP–5–365 | 0 |
| FP–5–366 blank | 0 |
| FP–5–367 | 0 |
| FP–5–368 blank | 0 |
| FP–5–369 | 0 |
| FP–5–370 blank | 0 |
| FP–5–371 | 0 |
| FP–5–372 blank | 0 |
| FP–5–373 | 1 |
| FP–5–374 blank | 1 |
| FP–5–375 | 0 |
| FP–5–376 blank | 0 |
| FP–5–377 | 0 |
| FP–5–378 blank | 0 |
| FP–5–379 | 1 |

* Zero in this column indicates an original page.

# LIST OF EFFECTIVE PAGES

INSERT LATEST CHANGED PAGES, DESTROY SUPERCEDED PAGES.

| Page No. | *Change No. |
|---|---|
| FP–5–380 blank | 1 |
| FP–5–381 | 1 |
| FP–5–382 blank | 1 |
| FP–5–383 | 0 |
| FP–5–384 blank | 0 |
| FP–5–385 | 1 |
| FP–5–386 blank | 1 |
| FP–5–387 | 1 |
| FP–5–388 blank | 1 |
| FP–5–389 | 0 |
| FP–5–390 blank | 0 |
| FP–5–391 | 1 |
| FP–5–392 blank | 1 |
| FP–5–393 | 0 |
| FP–5–394 blank | 0 |
| FP–5–395 | 0 |
| FP–5–396 blank | 0 |
| FP–5–397 | 1 |
| FP–5–398 blank | 1 |
| FP–5–399 | 1 |
| FP–5–400 blank | 1 |
| FP–5–401 | 1 |
| FP–5–402 blank | 1 |
| FP–5–403 | 1 |
| FP–5–404 blank | 1 |
| FP–5–405 | 1 |
| FP–5–406 blank | 1 |
| FP–5–407 | 1 |
| FP–5–408 blank | 1 |
| FP–5–409 | 1 |
| FP–5–410 blank | 1 |
| FP–5–411 | 1 |
| FP–5–412 blank | 1 |
| FP–5–413 | 1 |
| FP–5–414 blank | 1 |
| FP–5–415 | 1 |
| FP–5–416 blank | 1 |
| FP–5–417 | 1 |
| FP–5–418 blank | 1 |
| FP–5–419 | 0 |
| FP–5–420 blank | 0 |
| FP–5–421 | 0 |
| FP–5–422 blank | 0 |
| FP–5–423 | 0 |
| FP–5–424 blank | 0 |
| FP–5–425 | 0 |
| FP–5–426 blank | 0 |
| FP–5–427 | 0 |
| FP–5–428 blank | 0 |
| FP–5–429 | 0 |
| FP–5–430 blank | 0 |
| FP–5–431 | 0 |
| FP–5–432 blank | 0 |
| FP–5–433 | 0 |
| FP–5–434 blank | 0 |
| FP–5–435 | 0 |
| FP–5–436 blank | 0 |
| FP–5–437 | 0 |
| FP–5–438 blank | 0 |
| FP–5–439 | 1 |
| FP–5–440 blank | 1 |
| FP–5–441 | 1 |
| FP–5–442 blank | 1 |
| FP–5–443 | 0 |
| FP–5–444 blank | 0 |
| FP–5–445 | 1 |
| FP–5–446 blank | 1 |
| FP–5–447 | 1 |
| FP–5–448 blank | 1 |
| FP–5–449 | 0 |
| FP–5–450 blank | 0 |
| FP–5–451 | 0 |
| FP–5–452 blank | 0 |
| FP–5–453 | 0 |
| FP–5–454 blank | 0 |
| FP–5–455 | 1 |
| FP–5–456 blank | 1 |
| FP–5–457 | 0 |
| FP–5–458 blank | 0 |
| FP–5–459 | 0 |
| FP–5–460 blank | 0 |
| FP–5–461 | 0 |
| FP–5–462 blank | 0 |
| FP–5–463 | 0 |
| FP–5–464 blank | 0 |
| FP–5–465 | 0 |
| FP–5–466 blank | 0 |
| FP–5–467 | 0 |
| FP–5–468 blank | 0 |
| FP–5–469 | 0 |
| FP–5–470 blank | 0 |
| FP–5–471 | 0 |
| FP–5–472 blank | 0 |
| FP–5–473 | 0 |
| FP–5–474 blank | 0 |
| FP–5–475 | 0 |
| FP–5–476 blank | 0 |
| FP–5–477 | 0 |
| FP–5–478 blank | 0 |
| FP–5–479 | 1 |
| FP–5–480 blank | 1 |
| FP–5–481 | 0 |
| FP–5–482 blank | 0 |
| FP–5–483 | 0 |
| FP–5–484 blank | 0 |
| FP–5–485 | 0 |
| FP–5–486 blank | 0 |
| FP–5–487 | 0 |
| FP–5–488 blank | 0 |
| FP–5–489 | 0 |
| FP–5–490 blank | 0 |
| FP–5–491 | 0 |
| FP–5–492 blank | 0 |
| 6–1 – 6–5 | 0 |
| 6–6 – 6–15 | 1 |
| 6–16 – 6–18 | 0 |
| 6–19 | 1 |
| 6–20 – 6–25 | 0 |
| 6–26 | 1 |
| 6–27 | 0 |
| 6–28 – 6–29 | 1 |
| 6–30 – 6–35 | 0 |
| 6–36 – 6–38 | 1 |
| 6–39 – 6–48 | deleted |
| 6–49 – 6–68 | 1 |
| 6–69 – 6–100 | 0 |
| 6–101 | 1 |
| 6–102 – 6–108 | 0 |
| 6–109 – 6–110 | 1 |
| FP–6–111 | deleted |
| FP–6–112 blank | deleted |
| FP–6–113 | deleted |
| FP–6–114 blank | deleted |
| FP–6–115 | deleted |
| FP–6–116 blank | deleted |
| FP–6–117 | deleted |
| FP–6–118 blank | deleted |
| FP–6–119 | deleted |

* Zero in this column indicates an original page.

# LIST OF EFFECTIVE PAGES

INSERT LATEST CHANGED PAGES, DESTROY SUPERCEDED PAGES.

| Page No. | *Change No. |
|---|---|
| FP–6–120 blank | deleted |
| FP–6–121 | deleted |
| FP–6–122 blank | deleted |
| FP–6–123 | deleted |
| FP–6–124 blank | deleted |
| FP–6–125 | deleted |
| FP–6–126 blank | deleted |
| FP–6–127 | 1 |
| FP–6–128 blank | 1 |
| FP–6–129 | 2 |
| FP–6–130 blank | 2 |
| FP–6–131 | 2 |
| FP–6–132 blank | 2 |
| FP–6–133 | 1 |
| FP–6–134 blank | 1 |
| FP–6–135 | 1 |
| FP–6–136 blank | 1 |
| FP–6–137 | 1 |
| FP–6–138 blank | 1 |
| FP–6–139 | 1 |
| FP–6–140 blank | 1 |
| FP–6–141 | 1 |
| FP–6–142 blank | 1 |
| FP–6–143 | 0 |
| FP–6–144 blank | 0 |
| FP–6–145 | 0 |
| FP–6–146 blank | 0 |
| FP–6–147 | 1 |
| FP–6–148 blank | 1 |
| FP–6–149 | 0 |
| FP–6–150 blank | 0 |
| FP–6–151 | 0 |
| FP–6–152 blank | 0 |
| FP–6–153 | 0 |
| FP–6–154 blank | 0 |
| FP–6–155 | 0 |
| FP–6–156 blank | 0 |
| FP–6–157 | 0 |
| FP–6–158 blank | 0 |
| FP–6–159 | 0 |
| FP–6–160 blank | 0 |
| FP–6–161 | 0 |
| FP–6–162 blank | 0 |
| FP–6–163 | 0 |
| FP–6–164 blank | 0 |
| FP–6–165 | 0 |
| FP–6–166 blank | 0 |
| FP–6–167 | 0 |
| FP–6–168 blank | 0 |
| FP–6–169 | 0 |
| FP–6–170 blank | 0 |
| FP–6–171 | 1 |
| FP–6–172 blank | 1 |
| FP–6–173 | 0 |
| FP–6–174 blank | 0 |
| FP–6–175 | 0 |
| FP–6–176 blank | 0 |
| FP–6–177 | 0 |
| FP–6–178 blank | 0 |
| FP–6–179 | 0 |
| FP–6–180 blank | 0 |
| FP–6–181 | 0 |
| FP–6–182 blank | 0 |
| FP–6–183 | 0 |
| FP–6–184 blank | 0 |
| FP–6–185 | 0 |
| FP–6–186 blank | 0 |
| FP–6–187 | 0 |
| FP–6–188 blank | 0 |
| FP–6–189 | 0 |
| FP–6–190 blank | 0 |
| FP–6–191 | 0 |
| FP–6–192 blank | 0 |
| FP–6–193 | 0 |
| FP–6–194 blank | 0 |
| FP–6–195 | 0 |
| FP–6–196 blank | 0 |
| FP–6–197 | 0 |
| FP–6–198 blank | 0 |
| FP–6–199 | 0 |
| FP–6–200 blank | 0 |
| FP–6–201 | 1 |
| FP–6–202 blank | 1 |
| FP–6–203 | 0 |
| FP–6–204 blank | 0 |
| FP–6–205 | 0 |
| FP–6–206 blank | 0 |
| FP–6–207 | 1 |
| FP–6–208 blank | 1 |
| FP–6–209 | 0 |
| FP–6–210 blank | 0 |
| FP–6–211 | 1 |
| FP–6–212 blank | 1 |
| FP–6–213 | 0 |
| FP–6–214 blank | 0 |
| FP–6–215 | 1 |
| FP–6–216 blank | 1 |
| FP–6–217 | 0 |
| FP–6–218 blank | 0 |
| FP–6–219 | 0 |
| FP–6–220 blank | 0 |
| FP–6–221 | 0 |
| FP–6–222 blank | 0 |
| FP–6–223 | 0 |
| FP–6–224 blank | 0 |
| FP–6–225 | 1 |
| FP–6–226 blank | 1 |
| FP–6–227 | 0 |
| FP–6–228 blank | 0 |
| FP–6–229 | 0 |
| FP–6–230 blank | 0 |
| FP–6–231 | 0 |
| FP–6–232 blank | 0 |
| FP–6–233 | 1 |
| FP–6–234 blank | 1 |
| FP–6–235 | 0 |
| FP–6–236 blank | 0 |
| FP–6–237 | 0 |
| FP–6–238 blank | 0 |
| FP–6–239 | 0 |
| FP–6–240 blank | 0 |
| FP–6–241 | 0 |
| FP–6–242 blank | 0 |
| FP–6–243 | 0 |
| FP–6–244 blank | 0 |
| FP–6–245 | 0 |
| FP–6–246 blank | 0 |
| FP–6–247 | 0 |
| FP–6–248 blank | 0 |
| FP–6–249 | 0 |
| FP–6–250 blank | 0 |
| FP–6–251 | 0 |
| FP–6–252 blank | 0 |
| FP–6–253 | 0 |
| FP–6–254 blank | 0 |
| FP–6–255 | 0 |
| FP–6–256 blank | 0 |
| 6–257 – 6–261 | 0 |

* Zero in this column indicates an original page.

# LIST OF EFFECTIVE PAGES

INSERT LATEST CHANGED PAGES, DESTROY SUPERCEDED PAGES.

| Page No. | *Change No. | Page No. | *Change No. | Page No. | *Change No. |
|---|---|---|---|---|---|
| 6–262 blank | 0 | FP–6–308 blank | 0 | FP–6–383 | 0 |
| FP–6–263 | 0 | FP–6–309 | 0 | FP–6–384 blank | 0 |
| FP–6–264 blank | 0 | FP–6–310 blank | 0 | FP–6–385 | 0 |
| FP–6–265 | 0 | FP–6–311 | 0 | FP–6–386 blank | 0 |
| FP–6–266 blank | 0 | FP–6–312 blank | 0 | FP–6–387 | 0 |
| FP–6–267 | 0 | FP–6–313 | 0 | FP–6–388 blank | 0 |
| FP–6–268 blank | 0 | FP–6–314 blank | 0 | FP–6–389 | 0 |
| FP–6–269 | 0 | FP–6–315 | 0 | FP–6–390 blank | 0 |
| FP–6–270 blank | 0 | FP–6–316 blank | 0 | FP–6–391 | 0 |
| FP–6–271 | 0 | FP–6–317 | 0 | FP–6–392 blank | 0 |
| FP–6–272 blank | 0 | FP–6–318 blank | 0 | FP–6–393 | 0 |
| FP–6–273 | 0 | FP–6–319 | 0 | FP–6–394 blank | 0 |
| FP–6–274 blank | 0 | FP–6–320 blank | 0 | FP–6–395 | 0 |
| FP–6–275 | 0 | FP–6–321 | 0 | FP–6–396 blank | 0 |
| FP–6–276 blank | 0 | FP–6–322 blank | 0 | FP–6–397 | 0 |
| FP–6–277 | 0 | FP–6–323 | 0 | FP–6–398 blank | 0 |
| FP–6–278 blank | 0 | FP–6–324 blank | 0 | FP–6–399 | 0 |
| FP–6–279 | 0 | FP–6–325 | 0 | FP–6–400 blank | 0 |
| FP–6–280 blank | 0 | FP–6–326 blank | 0 | FP–6–401 | 0 |
| FP–6–281 | 0 | FP–6–327 | 0 | FP–6–402 blank | 0 |
| FP–6–282 blank | 0 | FP–6–328 blank | 0 | FP–6–403 | 0 |
| FP–6–283 | 0 | FP–6–329 | 0 | FP–6–404 blank | 0 |
| FP–6–284 blank | 0 | FP–6–330 blank | 0 | FP–6–405 | 0 |
| FP–6–285 | 0 | FP–6–331 | 0 | FP–6–406 blank | 0 |
| FP–6–286 blank | 0 | FP–6–332 blank | 0 | FP–6–407 | 0 |
| FP–6–287 | 0 | FP–6–333 | 0 | FP–6–408 blank | 0 |
| FP–6–288 blank | 0 | FP–6–334 blank | 0 | FP–6–409 | 0 |
| FP–6–289 | 0 | FP–6–335 | 0 | FP–6–410 blank | 0 |
| FP–6–290 blank | 0 | FP–6–336 blank | 0 | FP–6–411 | 0 |
| FP–6–291 | 0 | FP–6–337 | 0 | FP–6–412 blank | 0 |
| FP–6–292 blank | 0 | FP–6–338 blank | 0 | FP–6–413 | 0 |
| FP–6–293 | 0 | FP–6–339 | 0 | FP–6–414 blank | 0 |
| FP–6–294 blank | 0 | FP–6–340 blank | 0 | FP–6–415 | 0 |
| FP–6–295 | 0 | 6–341 – 6–342 | 0 | FP–6–416 blank | 0 |
| FP–6–296 blank | 0 | FP–6–343 | 0 | 6–417 – 6–428 | 0 |
| FP–6–297 | 0 | FP–6–344 blank | 0 | FP–6–429 | 0 |
| FP–6–298 blank | 0 | 6–345 – 3–367 | 0 | FP–6–430 blank | 0 |
| FP–6–299 | 0 | 6–368 | 2 | FP–6–431 | 0 |
| FP–6–300 blank | 0 | 6–369 – 6–375 | 0 | FP–6–432 blank | 0 |
| FP–6–301 | 0 | 6–376 blank | 0 | FP–6–433 | 0 |
| FP–6–302 blank | 0 | FP–6–377 | 0 | FP–6–434 blank | 0 |
| FP–6–303 | 0 | FP–6–378 blank | 0 | FP–6–435 | 0 |
| FP–6–304 blank | 0 | FP–6–379 | 0 | FP–6–436 blank | 0 |
| FP–6–305 | 0 | FP–6–380 blank | 0 | FP–6–437 | 0 |
| FP–6–306 blank | 0 | FP–6–381 | 0 | FP–6–438 blank | 0 |
| FP–6–307 | 0 | FP–6–382 blank | 0 | FP–6–439 | 0 |

* Zero in this column indicates an original page.

# LIST OF EFFECTIVE PAGES

INSERT LATEST CHANGED PAGES, DESTROY SUPERCEDED PAGES.

| Page No. | *Change No. |
|---|---|
| FP–6–440 blank | 0 |
| FP–6–441 | 0 |
| FP–6–442 blank | 0 |
| FP–6–443 | 0 |
| FP–6–444 blank | 0 |
| 6–445 – 6–450 | 0 |
| 6–451 – 6–454 | 1 |
| 6–455 | 0 |
| 6–456 | 1 |
| 6–457 – 6–466 | 0 |
| 6–467 – 6–481 | 1 |
| 6–482 blank | 1 |
| 6–483 – 6–490 | deleted |
| 6–491 | 1 |
| 6–492 – 6–495 | 0 |
| 6–496 – 6–500 | 1 |
| 6–501 | 0 |
| 6–502 | 1 |
| 6–503 | 0 |
| 6–504 – 6–505 | 1 |
| 6–506 – 6–588 | 0 |
| 6–589 | 1 |
| 6–590 – 6–594 | 0 |
| 6–595 | 1 |
| 6–596 – 6–603 | 0 |
| 6–604 – 6–605 | 1 |
| 6–606 – 6–607 | 0 |
| 6–608 | 1 |
| 6–609 | 0 |
| 6–610 – 6–620 | 1 |
| 6–621 – 6–622 | 0 |
| 6–623 | 1 |
| 6–624 – 6–627 | 0 |
| 6–628 | 1 |
| 6–629 – 6–630 | 0 |
| 6–631 | 1 |
| 6–632 | 0 |
| 6–633 – 6–635 | 1 |
| 6–636 – 6–641 | 0 |
| 6–642 – 6–643 | 1 |
| 6–644 | 0 |
| 6–645 | 1 |
| 6–646 | 0 |
| 6–647 | 1 |
| 6–648 – 6–650 | 0 |
| 6–651 – 6–652 | 1 |
| 6–653 | 0 |
| 6–654 – 6–659 | 1 |
| 6–660 | 0 |
| 6–661 | 1 |
| 6–662 | 0 |
| 6–663 – 6–664 | 1 |
| 6–665 | 0 |
| 6–666 – 6–668 | 1 |
| 6–669 | 0 |
| 6–670 | 1 |
| 6–671 | 0 |
| 6–672 – 6–673 | 1 |
| 6–674 – 6–681 | 0 |
| 6–682 – 6–683 | 1 |
| 6–684 – 6–714 | 0 |
| 6–715 | 1 |
| 6–716 – 6–736 | 0 |
| 6–737 | 1 |
| 6–738 – 6–745 | 0 |
| **6–746** | **3** |
| 6–747 – 6–753 | 0 |
| 6–754 | 1 |
| 6–755 – 6–756 | 0 |
| 6–757 | 1 |
| 6–758 | 0 |
| 6–759 – 6–760 | 1 |
| 6–760.1 – 6–760.2 | 1 |
| 6–761 – 6–762 | 1 |
| 6–762.1 | 1 |
| 6–762.2 blank | 1 |
| 6–763 | 1 |
| 6–764 – 6–766 | 0 |
| **6–767** | **3** |
| 6–768 – 6–770 | 0 |
| 6–771 – 6–772 | 1 |
| 6–773 | 0 |
| 6–774 – 6–775 | 1 |
| 6–776 | 0 |
| 6–777 – 6–778 | 1 |
| 6–779 – 6–786 | 0 |
| 6–787 – 6–790 | 1 |
| 6–791 – 6–792 | 0 |
| **6–793** | **3** |
| 6–794 – 6–796 | 0 |
| 6–797 | 1 |
| 6–798 – 6–816 | 0 |
| 6–817 | 1 |
| 6–818 – 6–825 | 0 |
| **6–826** | **3** |
| 6–827 – 6–838 | 0 |
| 6–839 | 1 |
| 6–840 | 0 |
| 6–841 | 1 |
| 6–842 – 6–843 | 0 |
| 6–844 | 1 |
| 6–845 – 6–857 | 0 |
| 6–858 | 1 |
| 6–859 | 0 |
| 6–860 blank | 0 |
| FP–6–861 | 0 |
| FP–6–862 blank | 0 |
| FP–6–863 | 1 |
| FP–6–864 blank | 1 |
| FP–6–865 | 0 |
| FP–6–866 blank | 0 |
| FP–6–867 | 2 |
| FP–6–868 blank | 2 |
| FP–6–869 | 0 |
| FP–6–870 blank | 0 |
| 6–871 – 6–872 | 1 |
| 6–873 | 0 |
| 6–874 – 6–875 | 2 |
| 6–876 | deleted |
| 6–877– 6–879 | 0 |
| 6–880 – 6–881 | 2 |
| 6–882 – 6–883 | 0 |
| 6–884 – 6–886 | 1 |
| 6–887 – 6–894 | 0 |
| 6–895 | 1 |
| 6–896 – 6–899 | 0 |
| 6–900 – 6–905 | 1 |
| 6–906 – 6–912 | 0 |
| 6–913 | 2 |
| 6–914 – 6–923 | 0 |
| 6–924 | 1 |
| 6–925 – 6–929 | 0 |
| 6–930 | 2 |
| 6–931 – 6–938 | deleted |
| 6–939 – 6–951 | 2 |
| 6–952 – 6–953 | 0 |
| 6–954 | 2 |
| 6–955 – 6–957 | 0 |

* Zero in this column indicates an original page.

# LIST OF EFFECTIVE PAGES

INSERT LATEST CHANGED PAGES, DESTROY SUPERCEDED PAGES.

| Page No. | *Change No. |
|---|---|
| 6–958 | 1 |
| 6–959 – 6–966 | 0 |
| 6–967 | 1 |
| 6–968 – 6–981 | 0 |
| 6–982 | 2 |
| 6–983 | 1 |
| 6–984 | 0 |
| 6–985 | 1 |
| 6–986 – 6–989 | 0 |
| 6–990 | 1 |
| 6–991 – 6–995 | 0 |
| 6–996 – 6–998.2 | 2 |
| 6–999 – 6–1000 | 1 |
| 6–1001 | 0 |
| 6–1002 | 1 |
| 6–1003 – 6–1010 | 0 |
| FP–6–1011 | 0 |
| FP–6–1012 blank | 0 |
| 6–1013 – 1027 | 0 |
| 6–1028 | 2 |
| 6–1029 – 6–1060 | 0 |
| 6–1061 | 1 |
| 6–1062 – 6–1064 | 0 |
| FP–6–1065 | 0 |
| FP–6–1066 blank | 0 |
| FP–6–1067 | 0 |
| FP–6–1068 blank | 0 |
| 7–1 | 1 |
| 7–2 | 0 |
| 7–3 – 7–69 | 1 |
| 7–70 blank | 1 |
| 7–71 – 7–197 | 1 |
| 7–198 blank | 1 |
| 7–199 – 7–222 | deleted |
| 7–223 | 1 |
| 7–224 – 7–232 | 0 |
| 7–233 | 1 |
| 7–234 – 7–278 | 0 |
| 7–279 | 1 |
| 7–280 – 7–294 | 0 |
| 7–295 | 1 |
| 7–296 – 7–310 | 0 |
| 7–311 | 1 |
| 7–312 | 0 |
| 7–313 | 1 |
| 7–314 – 7–342 | 0 |
| 7–343 – 7–344 | 1 |
| 7–345 | 0 |
| 7–346 blank | 0 |
| FP–7–347 | 1 |
| FP–7–348 blank | 1 |
| FP–7–349 | 0 |
| FP–7–350 blank | 0 |
| FP–7–351 | 0 |
| FP–7–352 blank | 0 |
| FP–7–353 | 0 |
| FP–7–354 blank | 0 |
| FP–7–355 | 1 |
| FP–7–356 blank | 1 |
| **FP–7–357** | **3** |
| **FP–7–358 blank** | **3** |
| **FP–7–359** | **3** |
| **FP–7–360 blank** | **3** |
| **FP–7–361** | **3** |
| **FP–7–362 blank** | **3** |
| **FP–7–363** | **3** |
| **FP–7–364 blank** | **3** |
| FP–7–365 | 0 |
| FP–7–366 blank | 0 |
| FP–7–367 | 0 |
| FP–7–368 blank | 0 |
| FP–7–369 | 0 |
| FP–7–370 blank | 0 |
| FP–7–371 | 0 |
| FP–7–372 blank | 0 |
| FP–7–373 | 0 |
| FP–7–374 blank | 0 |
| FP–7–375 | 1 |
| FP–7–376 blank | 1 |
| FP–7–377 | 0 |
| FP–7–378 blank | 0 |
| FP–7–379 | 0 |
| FP–7–380 blank | 0 |
| FP–7–381 | 0 |
| FP–7–382 blank | 0 |
| FP–7–383 | 1 |
| FP–7–384 blank | 1 |
| FP–7–385 | 1 |
| FP–7–386 blank | 1 |
| FP–7–387 | 1 |
| FP–7–388 blank | 1 |
| FP–7–389 | 1 |
| FP–7–390 blank | 1 |
| FP–7–391 | 1 |
| FP–7–392 blank | 1 |
| FP–7–393 | 1 |
| FP–7–394 blank | 1 |
| FP–7–395 | 1 |
| FP–7–396 blank | 1 |
| FP–7–397 | 1 |
| FP–7–398 blank | 1 |
| FP–7–399 | 1 |
| FP–7–400 blank | 1 |
| FP–7–401 | 1 |
| FP–7–402 blank | 1 |
| FP–7–403 | 1 |
| FP–7–404 blank | 1 |
| FP–7–405 | 1 |
| FP–7–406 blank | 1 |
| FP–7–407 | 1 |
| FP–7–408 blank | 1 |
| FP–7–409 | 1 |
| FP–7–410 blank | 1 |
| FP–7–411 | 0 |
| FP–7–412 blank | 0 |
| FP–7–413 | 0 |
| FP–7–414 blank | 0 |
| FP–7–415 | 0 |
| FP–7–416 blank | 0 |
| FP–7–417 | 0 |
| FP–7–418 blank | 0 |
| FP–7–419 | 0 |
| FP–7–420 blank | 0 |
| FP–7–421 | 1 |
| FP–7–422 blank | 1 |
| FP–7–423 | 1 |
| FP–7–424 blank | 1 |
| FP–7–425 | 0 |
| FP–7–426 blank | 0 |
| FP–7–427 | 1 |
| FP–7–428 blank | 1 |
| FP–7–429 | 0 |
| FP–7–430 blank | 0 |
| FP–7–431 | 0 |
| FP–7–432 blank | 0 |
| FP–7–433 | 0 |
| FP–7–434 blank | 0 |
| FP–7–435 | 1 |

* Zero in this column indicates an original page.

# LIST OF EFFECTIVE PAGES

INSERT LATEST CHANGED PAGES, DESTROY SUPERCEDED PAGES.


| Page No. | *Change No. | Page No. | *Change No. | Page No. | *Change No. |
|---|---|---|---|---|---|
| FP–7–436 blank | 1 | Index 30 – Index 32 | 0 | Index 104 – Index 105 | 0 |
| FP–7–437 | 0 | Index 33 – Index 34 | 1 | Index 106 | 1 |
| FP–7–438 blank | 0 | Index 35 – Index 54 | 0 | Index 107 – Index 111 | 0 |
| FP–7–439 | 1 | Index 55 | 1 | Index 112 – Index 114 | 1 |
| FP–7–440 blank | 1 | Index 56 – Index 61 | 0 | Index 115 – Index 116 | 0 |
| FP–7–441 | 1 | Index 62 | 2 | Index 117 | 1 |
| FP–7–442 blank | 1 | Index 63 – Index 68 | 0 | Index 118 – Index 120 | 0 |
| Index 1 | 1 | Index 69 | 1 | Index 121 – Index 127 | 1 |
| Index 2 – Index 15 | 0 | Index 70 | 0 | Index 128 – Index 137 | 0 |
| Index 16 | 1 | Index 71 | 1 | Index 138 | 1 |
| Index 17 – Index 18 | 0 | Index 72 – Index 80 | 0 | Index 139 – Index 142 | 0 |
| Index 19 | 1 | Index 81 | 2 | Index 143 – Index 144 | 1 |
| Index 20 | 0 | Index 82 | 0 | Index 145 – Index 155 | 0 |
| Index 21 | 2 | Index 83 | 1 | Index 156 blank | 0 |
| Index 22 – Index 28 | 0 | Index 84 – Index 102 | 0 | Glossary 1 – Glossary 12 | 0 |
| Index 29 | 2 | Index 103 | 1 | | |


* Zero in this column indicates an original page.

# TABLE OF CONTENTS


| Paragraph | Title | Page |
|---|---|---|
| LIST OF ILLUSTRATIONS | | xlvi |
| LIST OF TABLES | | lii |
| FOREWORD | | lvi |
| SAFETY SUMMARY | | lviii |
| **CHAPTER 1** | **GENERAL INFORMATION** | **1-1** |
| Section 1-1. | Introduction | 1-1 |
| 1-1.1 | General. | 1-1 |
| 1-1.2 | Radar Data Acquisition Group Equipment. | 1-1 |
| 1-1.3 | Leading Particulars. | 1-2 |
| 1-1.4 | Radar Data Acquisition Group Capabilities and Limitations. | 1-2 |
| Section 1-2. | Equipment Description | 1-14 |
| 1-2.1 | Radar Data Acquisition Group Equipment Supplied. | 1-14 |
| 1-2.2 | RDA Equipment Description. | 1-14 |
| 1-2.2.1 | Equipment Shelter UD1 | 1-14 |
| 1-2.2.2 | Antenna/Pedestal UD2 | 1-14 |
| 1-2.2.2.1 | Antenna Reflector | 1-14 |
| 1-2.2.2.2 | Antenna Feed | 1-14 |
| 1-2.2.2.3 | Feed Support Structure | 1-14 |
| 1-2.2.2.4 | Pedestal Assembly | 1-14 |
| 1-2.2.2.5 | Antenna/Pedestal Drives | 1-15 |
| 1-2.2.2.6 | Radar Pedestal | 1-15 |
| 1-2.2.2.7 | Pedestal Disable | 1-15 |
| 1-2.2.3 | Radar Transmitter UD3 | 1-20 |
| 1-2.2.4 | Radar Receiver UD4 | 1-20 |
| 1-2.2.5 | RDA Data Processor Cabinet UD5 | 1-20 |
| 1-2.2.5.1 | FAA and NWS Redundant RDADP Cabinets UD5 and UD105 | 1-27 |
| 1-2.2.5.2 | Data Acquisition | 1-28 |
| 1-2.2.5.3 | RDADP | 1-28 |
| 1-2.2.5.4 | Internal Interfaces | 1-28 |
| 1-2.2.5.5 | RDA Maintenance Terminal | 1-28 |
| 1-2.2.5.6 | Signal Processor | 1-28 |
| 1-2.2.5.7 | Channel Service Unit (CSU) | 1-29 |
| 1-2.2.5.8 | Automatic A/B Wideband Communication Switch | 1-29 |
| 1-2.2.6 | Waveguide Pressurization Unit UD6 | 1-29 |
| 1-2.2.7 | Electrical Equipment Shelter UD7 | 1-29 |

| Paragraph | Title | Page |
|---|---|---|
| 1-2.2.8 | RDA Generator Shelter UD10 | 1-29 |
| 1-2.2.9 | Steel Tower UD11 | 1-29 |
| 1-2.2.10 | Radome UD12 | 1-29 |
| 1-2.2.1 1 | Microwave Line Of Sight (MLOS) Cabinet UD19/UD39 | 1-29 |
| 1-2.2.12 | Transition Power Maintenance Shelter UD60. | 1-29 |
| 1-2.3 | RDA Interfaces. | 1-30 |
| Section 1-3. | Software Description | 1-39 |
| 1-3.1 | Radar Data Acquisition Group Software. | 1-39 |
| 1-3.2 | Operating System Software Program (OS/32) CPCI 10. | 1-39 |
| 1-3.3 | RDA Status and Control Software Program CPCI 01. | 1-39 |
| 1-3.3.1 | Handle Maintenance Console | 1-40 |
| 1-3.3.2 | Monitor and Calibrate RDA | 1-40 |
| 1-3.3.3 | Form RDA Data | 1-40 |
| 1-3.3.3.1 | Creates Parameters List | 1-40 |
| 1-3.3.3.2 | Designates Destination | 1-40 |
| 1-3.3.3.3 | Stores Base and Status Data | 1-41 |
| 1-3.3.4 | Handle Wideband Data | 1-41 |
| 1-3.3.4.1 | Handle Wideband Link Steps | 1-41 |
| 1-3.3.4.2 | Handle Wideband Functions | 1-42 |
| 1-3.3.5 | Control RDA | 1-42 |
| 1-3.3.6 | Control Signal Processor | 1-42 |
| 1-3.3.7 | Control Pedestal | 1-43 |
| 1-3.3.8 | Handle RDA Interprocessor Link. | 1-43 |
| 1-3.3.9 | CPCI 01 Interface Requirements | 1-44 |
| 1-3.3.9.1 | Maintenance Console Interfaces | 1-44 |
| 1-3.3.9.2 | Pedestal Interface | 1-45 |
| 1-3.3.9.3 | Signal Processing Interface | 1-45 |
| 1-3.3.9.4 | Wideband Data Link Interface | 1-45 |
| 1-3.3.9.5 | CPCI 10 Interface | 1-45 |
| 1-3.3.9.6 | RDA System Operational Test Interface | 1-45 |
| 1-3.3.9.7 | Target Processor for CPCI 01 | 1-45 |
| 1-3.3.9.8 | Archive II Interface | 1-45 |
| 1-3.4 | RDA Signal Processing Software Program CPCI 02. | 1-45 |
| 1-3.4.1 | Compute Base Data | 1-46 |
| 1-3.4.2 | RDASC Processor Interface | 1-46 |
| 1-3.4.3 | RDA Calibration | 1-46 |
| 1-3.4.4 | Performance Monitoring/Fault Localization | 1-47 |
| 1-3.4.5 | Program Control | 1-47 |
| 1-3.4.5.1 | Power Turn On | 1-47 |
| 1-3.4.5.2 | Initialization | 1-47 |
| 1-3.4.5.3 | Start Elevation Layer | 1-47 |

| Paragraph | Title | Page |
|---|---|---|
| 1-3.4.5.4 | Radials | 1-47 |
| 1-3.4.6 | Base Data Processing Modes | 1-48 |
| 1-3.4.6.1 | Contiguous Surveillance Waveforms | 1-48 |
| 1-3.4.6.2 | Contiguous Doppler Waveforms with Range Ambiguity Resolution | 1-48 |
| 1-3.4.6.3 | Contiguous Doppler Waveforms without Range Ambiguity Resolution | 1-48 |
| 1-3.4.6.4 | Batch Waveforms | 1-48 |
| 1-3.4.7 | HSP Tasks | 1-48 |
| 1-3.5 | RDASOT Software Program CPCI 06. | 1-48 |
| 1-3.5.1 | Diagnostic Tests | 1-49 |
| 1-3.5.1.1 | Transmitter Diagnostic | 1-49 |
| 1-3.5.1.2 | Tower/Utility Diagnostic | 1-49 |
| 1-3.5.1.3 | DAU Diagnostic | 1-49 |
| 1-3.5.1.4 | Pedestal Diagnostic | 1-49 |
| 1-3.5.1.5 | Receiver Diagnostic | 1-49 |
| 1-3.5.1.6 | PSP Diagnostic | 1-49 |
| 1-3.5.1.7 | HSP Diagnostic | 1-50 |
| 1-3.5.2 | Calibration Tests | 1-50 |
| 1-3.5.2.1 | Complex Spectrum Measurement | 1-50 |
| 1-3.5.2.2 | Clutter Bypass Map Generation | 1-50 |
| 1-3.5.2.3 | Sun Source Checks | 1-50 |
| 1-3.5.3 | Manual Control and Display | 1-50 |
| 1-3.5.4 | CPCI 06 Interface Requirements | 1-50 |
| 1-3.6 | Data Processing Diagnostic Program CPCI 07. | 1-50 |
| Section 1-4. | Reference Data | 1-52 |
| 1-4.1 | RDA Group Reference Publications. | 1-52 |
| 1-4.2 | Glossary of Terms. | 1-52 |
| 1-4.3 | Equipment Supplied. | 1-52 |
| 1-4.4 | Standard Tools. | 1-52 |
| 1-4.5 | Standard Test Equipment. | 1-52 |
| 1-4.6 | Special Purpose Tools and Fixtures. | 1-52 |
| 1-4.7 | Consumables/Expendables. | 1-52 |
| **CHAPTER 2** | **NOT USED** | **2-1** |
| **CHAPTER 3** | **NOT USED** | **3-1** |
| **CHAPTER 4** | **OPERATIONS** | **4-1** |
| Section 4-1. | Introduction | 4-1 |
| 4-1.1 | General. | 4-1 |
| 4-1.1.1 | Section 4-1, Introduction | 4-1 |

| Paragraph | Title | Page |
|---|---|---|
| 4-1.1.2 | Section 4-2, Controls and Indicators | 4-1 |
| 4-1.1.3 | Section 4-3, System Console Mode Operations | 4-1 |
| 4-1.1.4 | Section 4-4, RDA Control/Diagnostic System Operations | 4-1 |
| 4-1.1.5 | Section 4-5, RDA Application Mode Operations | 4-1 |
| 4-1.1.6 | Section 4-6, RDA MICRO 3200 (M3200) Processor Diagnostic Operations | 4-2 |
| 4-1.1.7 | Section 4-7, RDA System Operability Test (RDASOT) Operations | 4-2 |
| 4-1.1.8 | Section 4-8, Emergency/Recovery Procedures | 4-2 |
| 4-1.2 | RDA Operating Modes and States. | 4-2 |
| 4-1.2.1 | Maintenance Activity | 4-2 |
| 4-1.2.2 | RDA Main Menu | 4-2 |
| 4-1.2.3 | RDA Status and Control Processor | 4-3 |
| 4-1.3 | Operating System 32 (OS/32). | 4-3 |
| 4-1.3.1 | Basic Concepts | 4-3 |
| 4-1.3.1.1 | CPU | 4-3 |
| 4-1.3.1.2 | Magnetic Tapes or Disks | 4-3 |
| 4-1.3.1.3 | Processor Operations | 4-4 |
| 4-1.3.1.4 | OS/32 | 4-4 |
| 4-1.3.2 | Operating System Command and Data Entry Prompts | 4-4 |
| 4-1.3.3 | Secondary OS/32 Features | 4-4 |
| 4-1.3.4 | System Console Special Key Sequences | 4-5 |
| 4-1.3.4.1 | <Ctrl> and S Keys | 4-5 |
| 4-1.3.4.2 | <Ctrl> and Q Keys | 4-5 |
| 4-1.3.4.3 | Special Keys | 4-5 |
| 4-1.3.4.4 | <Break> Key | 4-5 |
| 4-1.3.4.5 | <Ctrl> and V Keys | 4-5 |
| 4-1.3.5 | Loading OS/32 | 4-5 |
| 4-1.3.6 | Memory Configuration Error | 4-6 |
| 4-1.3.7 | OS/32 Syntax | 4-6 |
| 4-1.3.7.1 | OS/32 General Syntax Rules | 4-6 |
| 4-1.3.7.2 | OS/32 Statement Syntax Conventions | 4-6 |
| 4-1.3.7.3 | OS/32 File Descriptors | 4-8 |
| 4-1.4 | RDA Maintenance Terminal. | 4-8 |
| 4-1.4.1 | Modes | 4-9 |
| 4-1.4.2 | Keyboard Layout | 4-9 |
| 4-1.4.3 | Screen Display | 4-9 |
| 4-1.4.4 | Terminal Operation | 4-9 |
| 4-1.4.4.1 | Cursor Control Keys | 4-9 |
| 4-1.4.4.2 | Numeric Keypad Control Keys | 4-10 |
| 4-1.4.4.3 | Dedicated Control/Function Keys | 4-10 |
| 4-1.4.5 | Operator Testing | 4-15 |
| 4-1.4.6 | Configuration | 4-16 |
| 4-1.4.6.1 | Setup Configuration | 4-16 |

| Paragraph | Title | Page |
|---|---|---|
| 4-1.4.6.2 | Option Categories (Parameters) | 4-16 |
| 4-1.4.6.3 | Configuration Menus | 4-30 |
| Section 4-2. | Controls and Indicators | 4-31 |
| 4-2.1 | General. | 4-31 |
| 4-2.1.1 | Figure and Index No. Column | 4-31 |
| 4-2.1.2 | Control/Indicator Nomenclature Column | 4-31 |
| 4-2.1.3 | Function Column | 4-31 |
| 4-2.1.4 | Normal Position/State Column | 4-31 |
| 4-2.1.5 | Description | 4-31 |
| 4-2.2 | Radar Receiver UD4. | 4-32 |
| 4-2.3 | RDA Data Processor UD5. | 4-32 |
| 4-2.3.1 | Maintenance Panel UD5A2 Controls and Indicators | 4-33 |
| 4-2.3.2 | Swing-Out Power Subsystem UD5PS5 Controls and Indicators | 4-33 |
| 4-2.3.3 | CDS Master Module UD5PS5A3 Controls and Indicators | 4-33 |
| 4-2.3.4 | RDA Maintenance Terminal UD5A4 Controls and Indicators | 4-33 |
| 4-2.3.5 | Pedestal Power Amplifier Unit UD5A7 Controls and Indicators | 4-33 |
| 4-2.3.6 | SCSI Assembly UD5A5 Controls and Indicators | 4-33 |
| 4-2.3.7 | VME Chassis UD5A1 Controls and Indicators | 4-33 |
| 4-2.3.8 | VME Wideband Board UD5A1A2/A3 Controls and Indicators | 4-33 |
| 4-2.3.9 | VMEbus to Concurrent I/O Bus Interface Board UD5A1A1 Controls and Indicators | 4-33 |
| 4-2.3.10 | VMEbus to Concurrent I/O Bus Interface Board UD5A12A18 Controls and Indicators | 4-33 |
| 4-2.3.1 1 | Power Supply Assemblies UD5PS2 and UD5PS3 Controls and Indicators | 4-33 |
| 4-2.3.12 | AC Power Distribution Panel UD5A14 Controls and Indicators | 4-33 |
| 4-2.3.13 | Channel Service Unit (CSU) UD5A18 Controls and Indicators | 4-34 |
| 4-2.3.14 | Automatic Wideband Communication Switch UD5A19 Controls and Indicators | 4-34 |
| 4-2.3.15 | STATMUX UD105A20 Controls and Indicators | 4-34 |
| 4-2.3.16 | Dial Port Modem UD105A21 (Standalone) Controls and Indicators | 4-34 |
| 4-2.3.17 | A/B Switch and Dual A/B Switch UD5A17 Controls and Indicators | 4-34 |
| 4-2.4 | Wideband Communications Cabinet Assembly UD19/UD39. | 4-34 |
| 4-2.5 | Interlocks. | 4-34 |
| Section 4-3. | System Console Mode Operations | 4-75 |
| 4-3.1 | Introduction. | 4-75 |
| 4-3.2 | Miscellaneous Disk/Tape Operations. | 4-75 |
| 4-3.2.1 | Disk/Tape Backup Procedure | 4-76 |
| 4-3.2.2 | Fastchek Procedure | 4-84 |
| 4-3.2.3 | Display File Names Procedure | 4-86 |

| Paragraph | Title | Page |
|---|---|---|
| 4-3.3 | RDA Data Processor Clock Time Set Procedure. | 4-89 |
| 4-3.4 | Software Installation Tape Loading Procedure. | 4-92 |
| 4-3.5 | OS/32 Command Format and Error Messages. | 4-103 |
| 4-3.6 | RDA “System Test” Check Procedure. | 4-137 |
| Section 4-4. | RDA Control/Diagnostic System Operations | 4-138 |
| 4-4.1 | Introduction. | 4-138 |
| 4-4.2 | Operating Modes. | 4-138 |
| 4-4.2.1 | Entering CDS Interactive Mode Procedure | 4-138 |
| 4-4.2.2 | Exiting CDS Interactive Mode Procedure | 4-138 |
| 4-4.3 | Entering CDS Commands. | 4-139 |
| 4-4.3.1 | Correcting Command Entries | 4-139 |
| 4-4.3.2 | Command Input Error Messages | 4-139 |
| 4-4.4 | CDS Command Set. | 4-139 |
| 4-4.4.1 | Accessing Key 1 and Key 2 Commands | 4-140 |
| 4-4.4.2 | Key 0 Commands | 4-140 |
| 4-4.4.3 | Key 1 Commands | 4-140 |
| 4-4.4.4 | Key 2 Commands | 4-140 |
| 4-4.5 | CDS Command Syntax. | 4-140 |
| 4-4.6 | Error and Advisory Messages. | 4-141 |
| Section 4-5. | RDA Application Mode Operations | 4-168 |
| 4-5.1 | Introduction. | 4-168 |
| 4-5.2 | Screen Use and Format. | 4-168 |
| 4-5.2.1 | Summary RDA Status Area | 4-168 |
| 4-5.2.2 | Alarm Area | 4-169 |
| 4-5.2.3 | Menu Area | 4-169 |
| 4-5.2.4 | Paging Line | 4-169 |
| 4-5.2.5 | Feedback Line | 4-169 |
| 4-5.2.6 | Incoming Messages Area | 4-169 |
| 4-5.2.7 | Remote Control Request Area | 4-169 |
| 4-5.2.8 | Command Entry Line | 4-169 |
| 4-5.2.9 | CRT Status Line | 4-169 |
| 4-5.3 | Commands. | 4-171 |
| 4-5.3.1 | Command Syntax | 4-172 |
| 4-5.3.2 | Issuing Commands from the Command Line | 4-172 |
| 4-5.3.3 | Issuing Commands from the Menus | 4-172 |
| 4-5.4 | RDA Operations/Maintenance Tasks. | 4-175 |
| 4-5.4.1 | Startup (STUP) | 4-176 |
| 4-5.4.2 | Shutdown (SHTDN) | 4-176 |
| 4-5.4.3 | Restart (REST) | 4-176 |

| Paragraph | Title | Page |
|---|---|---|
| 4-5.4.4 | Operational/Maintenance Mode Selection | 4-176 |
| 4-5.4.4.1 | Off-Line Operate (OLOP) | 4-176 |
| 4-5.4.4.2 | Select Mode (SELM) | 4-176 |
| 4-5.4.4.3 | Enable Interference Suppression Unit/Disable Interference Suppression Unit (ENAI/DISI) | 4-176 |
| 4-5.4.4.4 | Override Radiate Inhibit (OVRI) | 4-176 |
| 4-5.4.5 | Send/Display Messages (SENM/DISM) | 4-176 |
| 4-5.4.6 | Power Switching (STAP/STUP) | 4-177 |
| 4-5.4.7 | Display/Enter Log Data (DILD/ENLD) | 4-177 |
| 4-5.4.8 | Display Performance Data (DIPD) Status Monitoring | 4-177 |
| 4-5.4.9 | Archiving (ARCH) | 4-177 |
| 4-5.4.10 | Inspect/Change Adaptation Data (ICRA) | 4-185 |
| 4-5.4.11 | Switching Between Redundant Channels | 4-187 |
| 4-5.4.11.1 | DELETED | |
| 4-5.4.11.2 | FAA Redundant Systems With MSCF Installed for UD70/170 RPG | 4-187 |
| 4-5.4.11.3 | NWS Redundant Systems | 4-188 |
| 4-5.5 | RDA Operational States. | 4-221 |
| 4-5.6 | RDA Control. | 4-221 |
| Section 4-6. | RDA M3200 Processor Diagnostic Operations | 4-223 |
| 4-6.1 | Introduction. | 4-223 |
| 4-6.2 | RDA Group Diagnostic Programs. | 4-223 |
| 4-6.3 | RDA M3200 Processor Diagnostic Functional Description. | 4-224 |
| 4-6.3.1 | VMEbus to Concurrent I/O Bus Interface Diagnostic | 4-224 |
| 4-6.3.2 | Common RS-232 Interface Off-Line Test Program (06-127) | 4-224 |
| 4-6.3.3 | Diagnostic/Loader Executive, On-Line/Standalone (06-145) | 4-225 |
| 4-6.3.4 | Programmable Signal Processor Interface (PSPI) Board Test (06-290) | 4-225 |
| 4-6.3.5 | Intelligent Peripheral Controller (IPC) Diagnostic (06-297) | 4-225 |
| 4-6.3.6 | M3200 CPU Diagnostic (06-319) | 4-226 |
| 4-6.3.7 | M3200 Cache Diagnostic (06-321) | 4-228 |
| 4-6.3.8 | Composite Memory Module (CMM) Diagnostic (06-325) | 4-228 |
| 4-6.3.9 | Optical Disk System Diagnostic (91-539) | 4-229 |
| 4-6.4 | RDA M3200 Processor Diagnostic Procedures. | 4-230 |
| 4-6.4.1 | Initialization Procedure. | 4-230 |
| 4-6.4.2 | Program Loading Introduction | 4-232 |
| 4-6.4.3 | 06-127 Common RS-232 Interface Off-Line Test Procedure | 4-233 |
| 4-6.4.4 | VMEbus to Concurrent I/O Bus Interface Diagnostic Test Procedure | 4-237 |
| 4-6.4.5 | 06-290 PSPI Diagnostics Test Procedure (PSPI Test) | 4-238 |
| 4-6.4.6 | 06-297 Intelligent Peripheral Controller (IPC) Diagnostic Test Procedure | 4-239 |
| 4-6.4.7 | 06-319 M3200 Processor Diagnostic Procedure | 4-243 |
| 4-6.4.8 | 06-321 M3200 Cache Diagnostic Test Procedure | 4-245 |

| Paragraph | Title | Page |
|---|---|---|
| 4-6.4.9 | 06-325 Composite Memory Module (CMM), Part 1 Diagnostic Test Procedure | 4-245 |
| 4-6.4.10 | 06-325 Composite Memory Module (CMM), Part 2 Test Procedure | 4-246 |
| 4-6.5 | RDA Restoration Procedure. | 4-246 |
| Section 4-7. | RDA System Operability Test Operations | 4-248 |
| 4-7.1 | Introduction. | 4-248 |
| 4-7.2 | General Information. | 4-248 |
| 4-7.2.1 | Operator Inputs | 4-248 |
| 4-7.2.2 | RDASOT Command | 4-248 |
| 4-7.2.3 | Termination of RDASOT | 4-249 |
| 4-7.2.3.1 | Normal Termination | 4-249 |
| 4-7.2.3.2 | Forced Termination | 4-249 |
| 4-7.2.4 | Menu Selection and Error Message Paging | 4-250 |
| 4-7.2.5 | Test Control and Subtest Options | 4-250 |
| 4-7.2.5.1 | Select All Subtests | 4-250 |
| 4-7.2.5.2 | De-Select All Subtests | 4-250 |
| 4-7.2.5.3 | Select Individual Subtests | 4-250 |
| 4-7.2.6 | Test Control Menu Modification Operations | 4-250 |
| 4-7.2.6.1 | Stop on Error | 4-250 |
| 4-7.2.6.2 | Continue on Error | 4-251 |
| 4-7.2.6.3 | Loop on Error | 4-251 |
| 4-7.3 | Diagnostic Test Functional Description. | 4-251 |
| 4-7.3.1 | Transmitter Diagnostics | 4-251 |
| 4-7.3.2 | Tower/Utility Diagnostic | 4-252 |
| 4-7.3.3 | DAU Diagnostic | 4-252 |
| 4-7.3.4 | Pedestal Diagnostics | 4-253 |
| 4-7.3.5 | Receiver Diagnostics | 4-253 |
| 4-7.3.6 | Programmable Signal Processor (PSP) Diagnostics | 4-254 |
| 4-7.3.7 | Hardwired Signal Processor (HSP) Diagnostics | 4-257 |
| 4-7.4 | Calibration Functional Description. | 4-258 |
| 4-7.4.1 | Complex Spectrum Measurement | 4-258 |
| 4-7.4.2 | Generate Clutter Map | 4-258 |
| 4-7.4.3 | Sun Source Checks | 4-258 |
| 4-7.5 | Maintenance Aids Functional Description. | 4-258 |
| 4-7.5.1 | Control Pedestal | 4-258 |
| 4-7.5.1.1 | Selection of Park Pedestal Function | 4-259 |
| 4-7.5.1.2 | Selection of Position Display | 4-259 |
| 4-7.5.2 | Control Receiver/Signal Processor | 4-259 |
| 4-7.5.3 | DAU BITE Display | 4-259 |
| 4-7.5.4 | Download PSP | 4-259 |
| 4-7.6 | RDASOT Procedures. | 4-259 |

| Paragraph | Title | Page |
|---|---|---|
| 4-7.6.1 | Initialization Procedure | 4-259 |
| 4-7.6.2 | Diagnostic Test Procedure | 4-261 |
| 4-7.6.3 | Calibration Procedure | 4-263 |
| 4-7.6.4 | Maintenance Aids Procedure | 4-266 |
| Section 4-8. | Emergency/Recovery Procedures | 4-271 |
| 4-8.1 | Introduction. | 4-271 |
| 4-8.2 | Terminal Malfunction Recovery Procedure. | 4-271 |
| 4-8.3 | Software Reinitialization (Reboot) Procedure. | 4-272 |
| 4-8.4 | Disk Errors. | 4-273 |
| 4-8.5 | OS/32 Error Description. | 4-273 |
| 4-8.6 | Power Down Reset. | 4-280 |
| 4-8.7 | Paused Task Recovery Procedure. | 4-280 |
| **CHAPTER 5** | **THEORY OF OPERATION** | **5-1** |
| Section 5-1. | Introduction | 5-1 |
| 5-1.1 | General. | 5-1 |
| 5-1.2 | Chapter Organization. | 5-1 |
| 5-1.2.1 | Section 5-1, Introduction | 5-2 |
| 5-1.2.2 | Section 5-2, RDA Group Block Diagram Description | 5-2 |
| 5-1.2.3 | Section 5-3, Transmitter Functional Block Diagram Description | 5-2 |
| 5-1.2.4 | Section 5-4, Receiver Functional Block Diagram Description | 5-2 |
| 5-1.2.5 | Section 5-5, HSP Functional Block Diagram Description | 5-2 |
| 5-1.2.6 | Section 5-6, PSP Functional Block Diagram Description | 5-2 |
| 5-1.2.7 | Section 5-7, RDASC Processor Functional Block Diagram Description | 5-2 |
| 5-1.2.8 | Section 5-8, VMEbus to Concurrent I/O Bus Interface (VCI) Functional Block Diagram Description | 5-2 |
| 5-1.2.9 | Section 5-9, RDA Status and Control Interface | 5-2 |
| 5-1.2.10 | Section 5-10, Microwave Distribution | 5-3 |
| 5-1.2.11 | Section 5-11, Antenna Positioning Electronics | 5-3 |
| 5-1.2.12 | Section 5-12, Power Distribution | 5-3 |
| 5-1.2.13 | Section 5-13, Redundant Switching | 5-3 |
| 5-1.2.14 | Section 5-14, Control RDA Program Function | 5-3 |
| 5-1.3 | RDA Tasks. | 5-3 |
| 5-1.4 | RDA Auxiliary Systems. | 5-3 |
| 5-1.5 | Reference Documentation. | 5-4 |
| Section 5-2. | RDA Group Block Diagram Description | 5-5 |
| 5-2.1 | Introduction. | 5-5 |
| 5-2.2 | Transmitter. | 5-5 |

| Paragraph | Title | Page |
|---|---|---|
| 5-2.2.1 | Control and Monitoring | 5-5 |
| 5-2.2.2 | Power and Low Voltage Distribution | 5-6 |
| 5-2.2.3 | Modulator | 5-6 |
| 5-2.2.4 | RF Amplification | 5-6 |
| 5-2.2.5 | High Power Microwave Distribution | 5-7 |
| 5-2.2.6 | Waveguide Pressurization Unit | 5-7 |
| 5-2.3 | Antenna. | 5-7 |
| 5-2.4 | Receiver. | 5-7 |
| 5-2.4.1 | Receiver Front End | 5-7 |
| 5-2.4.2 | Receiver Channel | 5-8 |
| 5-2.4.2.1 | AGC Function | 5-8 |
| 5-2.4.2.2 | A/D Converter | 5-8 |
| 5-2.4.3 | Master Signal Generator (MSG) | 5-8 |
| 5-2.4.3.1 | Master Signal Generation | 5-8 |
| 5-2.4.3.2 | RF Frequency Generator | 5-8 |
| 5-2.4.4 | Interference Detection | 5-8 |
| 5-2.4.5 | RF Test Signal Generation | 5-8 |
| 5-2.4.6 | RF Test Signal Processing | 5-9 |
| 5-2.5 | Antenna Positioning Electronics. | 5-9 |
| 5-2.5.1 | Servo Control Microprocessor | 5-9 |
| 5-2.5.2 | Servo Antenna Position Data Interface | 5-9 |
| 5-2.5.3 | Servo Loop Electronics | 5-9 |
| 5-2.5.4 | RDASC/Servo Interface | 5-9 |
| 5-2.5.5 | Peripheral Interface Adapter | 5-9 |
| 5-2.6 | RDA Status and Control Interface. | 5-9 |
| 5-2.6.1 | Analog Status Data Monitoring | 5-10 |
| 5-2.6.2 | Discrete Status Data Monitoring | 5-10 |
| 5-2.6.3 | DAU/RDASC Status Data Interface | 5-10 |
| 5-2.6.4 | RDASC/DAU Command Data Interface | 5-10 |
| 5-2.7 | Hardwired Signal Processor (HSP). | 5-10 |
| 5-2.7.1 | Video Prescaling | 5-1 1 |
| 5-2.7.2 | Ground Clutter Suppression | 5-1 1 |
| 5-2.7.2.1 | Cold Startup | 5-1 1 |
| 5-2.7.2.2 | Clutter Map Information | 5-1 1 |
| 5-2.7.3 | Receiver and Transmitter Synchronization | 5-1 1 |
| 5-2.7.4 | Interference Flag Processing | 5-12 |
| 5-2.7.5 | HSP Timing and Control | 5-12 |
| 5-2.7.6 | Receiver Control Data Generation | 5-12 |
| 5-2.7.7 | Receiver and HSP Test Data Generation | 5-12 |
| 5-2.7.8 | HSP and Receiver Status Data Collection | 5-12 |
| 5-2.8 | Programmable Signal Processor (PSP). | 5-12 |
| 5-2.8.1 | PSP Inputs | 5-12 |

| Paragraph | Title | Page |
|---|---|---|
| 5-2.8.2 | PSP Hardware | 5-13 |
| 5-2.8.3 | Software Aspects of Converting Video to Base Data | 5-13 |
| 5-2.8.3.1 | PRT Length Trade-Off | 5-13 |
| 5-2.8.3.2 | Beam Coverage Pattern | 5-13 |
| 5-2.8.3.3 | PSP | 5-14 |
| 5-2.8.4 | Other PSP Tasks | 5-14 |
| 5-2.8.4.1 | Interface with RDASC Processor | 5-14 |
| 5-2.8.4.2 | Program Control | 5-14 |
| 5-2.8.4.3 | RDA Calibration | 5-14 |
| 5-2.8.4.4 | Performance Monitoring and Fault Localization (PMFL) | 5-14 |
| 5-2.8.5 | Primary Outputs Developed by the PSP | 5-14 |
| 5-2.9 | RDASC Processing. | 5-15 |
| 5-2.9.1 | Central Processing Unit | 5-15 |
| 5-2.9.2 | Mass Storage and Archiving | 5-15 |
| 5-2.9.3 | RDASC Application Program Functions - CPCI 01 | 5-15 |
| 5-2.9.3.1 | Function 1 - Handle Maintenance Console | 5-15 |
| 5-2.9.3.2 | Function 2 - Monitor RDA Hardware | 5-15 |
| 5-2.9.3.3 | Function 3 - Form RDA Data | 5-16 |
| 5-2.9.3.4 | Function 4 - Handle Wideband Data | 5-16 |
| 5-2.9.3.5 | Function 5 - Control RDA | 5-16 |
| 5-2.9.3.6 | Function 6 - Control Signal Processor | 5-16 |
| 5-2.9.3.7 | Function 7 - Control Pedestal | 5-16 |
| 5-2.9.4 | RDA System Operability Test (RDASOT) Functions - CPCI 06 | 5-17 |
| 5-2.9.4.1 | Function 1 - SOT Control | 5-17 |
| 5-2.9.4.2 | Function 2 - Transmitter Diagnostics | 5-17 |
| 5-2.9.4.3 | Function 3 - Tower/Utility Diagnostics | 5-17 |
| 5-2.9.4.4 | Function 4 - DAU (Interface) Diagnostics | 5-17 |
| 5-2.9.4.5 | Function 5 - Pedestal Diagnostics | 5-17 |
| 5-2.9.4.6 | Function 6 - Receiver Diagnostics | 5-17 |
| 5-2.9.4.7 | Function 7 - PSP Diagnostics | 5-17 |
| 5-2.9.4.8 | Function 8 - HSP Diagnostics | 5-17 |
| 5-2.9.4.9 | Function 9 - Complex Spectrum Measurement (Confidence Test) | 5-18 |
| 5-2.9.4.10 | Function 10 - Clutter Bypass Map Generation | 5-18 |
| 5-2.9.4.11 | Function 11 - Sun Source Checks | 5-18 |
| 5-2.9.5 | RDASOT for Redundant Configurations | 5-18 |
| 5-2.10 | VMEbus to Concurrent I/O Bus Interface. | 5-18 |
| Section 5-3. | Transmitter Functional Block Diagram Description | 5-20 |
| 5-3.1 | Introduction. | 5-20 |
| 5-3.2 | Transmitter Overview. | 5-20 |
| 5-3.3 | Transmitter RF Amplification. | 5-20 |
| 5-3.3.1 | RF Driver Module Assembly UD3A4 | 5-21 |

| Paragraph | Title | Page |
|---|---|---|
| 5-3.3.2 | RF Pulse Shaper Module Assembly UD3A5 | 5-21 |
| 5-3.3.3 | Variable Attenuator UD3AT1 | 5-21 |
| 5-3.3.4 | Filament Power Supply UD3PS1 | 5-21 |
| 5-3.3.5 | Power Transformer UD3A7A1T4 | 5-21 |
| 5-3.3.6 | Pulse Transformer UD3A7T1 | 5-21 |
| 5-3.3.7 | Filament Transformer UD3A7T3 | 5-21 |
| 5-3.3.8 | Vacuum Pump Power Supply UD3PS8 | 5-21 |
| 5-3.3.9 | Focus Coil Power Supply UD3PS2 | 5-22 |
| 5-3.3.10 | Klystron Tube UD3V1 | 5-22 |
| 5-3.3.1 1 | Waveguide Arc/VSWR Detector UD3A6 | 5-22 |
| 5-3.3.12 | Oil Tank Component Board UD3A7A1A1 | 5-22 |
| 5-3.4 | Transmitter Pulse Modulation. | 5-22 |
| 5-3.4.1 | 280 Vdc Power Supply UD3A2 | 5-22 |
| 5-3.4.2 | Charging Switch UD3A10 | 5-22 |
| 5-3.4.3 | Charging Transformer UD3A7T2 | 5-22 |
| 5-3.4.4 | Modulator Pulse Assembly UD3A12 | 5-23 |
| 5-3.4.5 | Post Charge Regulator UD3A8 | 5-23 |
| 5-3.4.6 | Trigger Amplifier UD3A11 | 5-23 |
| 5-3.5 | Transmitter Control and Monitoring. | 5-23 |
| 5-3.5.1 | Control Adapter UD3A3A4 | 5-23 |
| 5-3.5.2 | Control Logic UD3A3A1 | 5-23 |
| 5-3.5.3 | Control Interface UD3A3A2 | 5-23 |
| 5-3.5.4 | RMS Interface UD3A3A3 | 5-24 |
| 5-3.5.5 | Transmitter Control Panel UD3A1 | 5-24 |
| 5-3.6 | Transmitter High Power Microwave Distribution. | 5-24 |
| 5-3.6.1 | Harmonic Filter UD1WG2 and UD1WG102 | 5-24 |
| 5-3.6.2 | Circulator UD1WG4 and UD1WG104 | 5-24 |
| 5-3.6.3 | Spectrum Filter UD1WG6 and 1WG106 | 5-24 |
| 5-3.6.4 | Crystal Detectors UD1CR1/1CR2 and 1CR101/1CR102 | 5-24 |
| 5-3.6.5 | Waveguide Switch UD1S1 | 5-24 |
| 5-3.6.6 | Waveguide Switch UD1S1 Control and Switching | 5-25 |
| 5-3.6.7 | Waveguide Switches UD1S1 and UD1S101 | 5-25 |
| 5-3.6.8 | Waveguide Switch UD1S2 | 5-25 |
| 5-3.6.9 | Waveguide Pressurization Unit UD6 and UD106 | 5-25 |
| 5-3.7 | Transmitter Power and Low Voltage Distribution. | 5-25 |
| 5-3.7.1 | Power Distribution Panel 3A13 | 5-25 |
| 5-3.7.2 | Fuse Box Assembly UD3N1N3 | 5-26 |
| 5-3.8 | Transmitter Cooling. | 5-26 |
| 5-3.9 | Transmitter Fault Monitoring. | 5-26 |
| 5-3.9.1 | Hardware Fault Monitoring | 5-26 |
| 5-3.9.2 | Software Fault Monitoring | 5-26 |
| 5-3.9.2.1 | Power Meter Zero | 5-27 |

| Paragraph | Title | Page |
|---|---|---|
| 5-3.9.2.2 | Average Power Measurement | 5-27 |
| 5-3.9.2.3 | Peak Power Measurement | 5-27 |
| Section 5-4. | Receiver Functional Block Diagram Description | 5-33 |
| 5-4.1 | Introduction. | 5-33 |
| 5-4.1.1 | Receiver | 5-33 |
| 5-4.1.1.1 | Signal Processing Functions | 5-33 |
| 5-4.1.1.2 | Test Functions | 5-33 |
| 5-4.2 | Receiver Signal Processing Overview. | 5-33 |
| 5-4.2.1 | Receiver/Transmitter Interface | 5-34 |
| 5-4.2.1.1 | T/R Circulator | 5-34 |
| 5-4.2.1.2 | Receiver Waveguide Switch. | 5-34 |
| 5-4.2.1.3 | Receiver Front End | 5-34 |
| 5-4.2.1.4 | RF Pre-Filtering | 5-34 |
| 5-4.2.1.5 | RF-to-IF Conversion | 5-35 |
| 5-4.2.1.6 | Automatic Gain Control | 5-35 |
| 5-4.2.1.7 | Log Channel Video Detection | 5-35 |
| 5-4.2.1.8 | Linear Channel Video Detection | 5-35 |
| 5-4.2.1.9 | A/D Converter | 5-35 |
| 5-4.2.2 | Master Signal Generation | 5-35 |
| 5-4.2.3 | Interference Detection | 5-36 |
| 5-4.3 | Receiver Channel. | 5-36 |
| 5-4.3.1 | Antenna Feed Assembly | 5-36 |
| 5-4.3.2 | Receiver Waveguide Switch | 5-37 |
| 5-4.3.3 | Transmit/Receive Function | 5-37 |
| 5-4.3.3.1 | Bandpass Filtering. | 5-37 |
| 5-4.3.4 | RF Amplification | 5-38 |
| 5-4.3.5 | RF Pre-Filtering | 5-38 |
| 5-4.3.6 | RF-to-IF Conversion | 5-38 |
| 5-4.3.6.1 | Mixer-Preamplifier | 5-38 |
| 5-4.3.6.2 | Matched Bandpass Filter | 5-39 |
| 5-4.3.7 | Log Channel Video Detection | 5-39 |
| 5-4.3.7.1 | IF Signal | 5-39 |
| 5-4.3.7.2 | Multiple Output Log Amplifier - Detection | 5-39 |
| 5-4.3.8 | Automatic Gain Control | 5-39 |
| 5-4.3.8.1 | Coaxial Delay Line | 5-40 |
| 5-4.3.8.2 | AGC Controller | 5-40 |
| 5-4.3.8.3 | IF Attenuator | 5-42 |
| 5-4.3.9 | Linear Channel Video Detection | 5-44 |
| 5-4.3.9.1 | IF Amplifier-Limiter | 5-44 |
| 5-4.3.9.2 | I/Q Phase Detector | 5-44 |
| 5-4.3.10 | Video A/D Conversion | 5-44 |

| Paragraph | Title | Page |
|---|---|---|
| 5-4.3.10.1 | Relays K1 through K3 | 5-45 |
| 5-4.3.10.2 | Bias Distortion | 5-45 |
| 5-4.3.10.3 | A/D Converter Test Signals | 5-45 |
| 5-4.4 | Master Signal Generation. | 5-46 |
| 5-4.4.1 | Receiver Interface | 5-46 |
| 5-4.4.1.1 | RCVR CLKs | 5-46 |
| 5-4.4.1.2 | RF GATE | 5-46 |
| 5-4.4.1.3 | RECEIVER CTRL DATA | 5-46 |
| 5-4.4.2 | Frequency Generator | 5-46 |
| 5-4.4.2.1 | Master Clock | 5-46 |
| 5-4.4.2.2 | IF COHO | 5-46 |
| 5-4.4.2.3 | RF Drive | 5-47 |
| 5-4.4.2.4 | STALO | 5-47 |
| 5-4.4.2.5 | RF Test | 5-47 |
| 5-4.5 | Interference Detection (Optional). | 5-47 |
| 5-4.5.1 | Guard Band IF Amplifier | 5-48 |
| 5-4.5.2 | Guard Band Filters | 5-48 |
| 5-4.5.3 | Log Amplifier-Detectors | 5-48 |
| 5-4.5.4 | Detection Processor | 5-49 |
| 5-4.5.4.1 | Echo Signals | 5-50 |
| 5-4.5.4.2 | Log Video Signal | 5-50 |
| 5-4.6 | Receiver Test Function Overview. | 5-50 |
| 5-4.6.1 | On-Line | 5-50 |
| 5-4.6.2 | Off-Line | 5-50 |
| 5-4.6.3 | RF Test Signal Generation | 5-51 |
| 5-4.6.4 | RF Test Signal Processing | 5-52 |
| 5-4.7 | RF Test Signal Generation. | 5-52 |
| 5-4.7.1 | Selection and Control Data Demux Function | 5-52 |
| 5-4.7.2 | Klystron Pulse Sample Scaling and Delay | 5-53 |
| 5-4.7.3 | Wideband Noise Generation | 5-53 |
| 5-4.7.4 | Input Test Signal Switching | 5-53 |
| 5-4.7.4.1 | Frequency Generator RF Test Signal | 5-53 |
| 5-4.7.4.2 | Wideband Noise Test Signal | 5-53 |
| 5-4.7.4.3 | Delayed Klystron Output Test Sample | 5-53 |
| 5-4.7.4.4 | Klystron RF Drive Sample | 5-53 |
| 5-4.7.4.5 | 4-Position RF Switch | 5-53 |
| 5-4.7.4.6 | Input Test Signal Select Control Signal | 5-54 |
| 5-4.7.5 | RF Test Signal Amplitude Control | 5-54 |
| 5-4.7.6 | RF Test Signal Destination Selection | 5-54 |
| 5-4.8 | RF Test Signal Processing. | 5-55 |
| 5-4.8.1 | RF/IF Test Sample Selection | 5-56 |
| 5-4.8.2 | RF/IF Test Sample Detection | 5-56 |

| Paragraph | Title | Page |
|---|---|---|
| 5-4.8.2.1 | RF Log Amplifier-Detector | 5-56 |
| 5-4.8.2.2 | IF Log Amplifier-Detector | 5-56 |
| 5-4.8.2.3 | Log Video Output | 5-56 |
| 5-4.8.3 | Detected Test Sample Selection and Processing | 5-57 |
| 5-4.8.3.1 | RF/IF Test Monitor | 5-57 |
| 5-4.8.3.2 | Clock Inputs | 5-57 |
| 5-4.8.4 | Receiver Status Data Interface Function | 5-57 |
| 5-4.9 | On-Line Calibration and Performance Checks. | 5-57 |
| 5-4.9.1 | Linear and Log Channel Reflectivity Calibration | 5-58 |
| 5-4.9.1.1 | RF Drive | 5-59 |
| 5-4.9.1.2 | RF Drive Average | 5-59 |
| 5-4.9.1.3 | RF Drive and CW Test Signal | 5-59 |
| 5-4.9.1.4 | SYSCAL | 5-59 |
| 5-4.9.1.5 | Alarm Parameters | 5-59 |
| 5-4.9.2 | Reflectivity Calibration Check | 5-59 |
| 5-4.9.3 | Velocity and Width (Spectrum) Check | 5-60 |
| 5-4.9.4 | Clutter Suppression Check | 5-60 |
| 5-4.9.5 | DC Offset and Noise Calibration | 5-60 |
| 5-4.9.6 | IF Attenuator Calibration and I&Q Amplitude and Phase Balance | 5-61 |
| 5-4.9.6.1 | I/Q Phase Detector | 5-61 |
| 5-4.9.7 | System Noise Temperatures | 5-62 |
| 5-4.9.7.1 | Channel Noise Degraded | 5-62 |
| 5-4.9.7.2 | System Noise Temp - Maint Required | 5-62 |
| 5-4.9.7.3 | System Noise Temp Degraded | 5-62 |
| 5-4.9.7.4 | ISU Performance Degraded | 5-62 |
| 5-4.10 | Off-Line Fault Isolation Diagnostic. | 5-62 |
| Section 5-5. | HSP Functional Block Diagram Description | 5-64 |
| 5-5.1 | Introduction. | 5-64 |
| 5-5.2 | HSP/PSP Relationships. | 5-64 |
| 5-5.2.1 | Video Signal Prescaling Processing | 5-64 |
| 5-5.2.2 | Time-Series Data | 5-64 |
| 5-5.2.3 | Raw Data | 5-65 |
| 5-5.2.3.1 | Synchronizer | 5-65 |
| 5-5.2.3.2 | Control Interface | 5-65 |
| 5-5.3 | HSP Overview. | 5-65 |
| 5-5.3.1 | Prescaling | 5-65 |
| 5-5.3.1.1 | Complex Data (I, Q) | 5-66 |
| 5-5.3.1.2 | Log Data | 5-66 |
| 5-5.3.1.3 | Clutter Filter | 5-66 |
| 5-5.3.2 | Ground Clutter Suppression | 5-67 |
| 5-5.3.2.1 | Ground Clutter Suppression Function | 5-67 |

| Paragraph | Title | Page |
|---|---|---|
| 5-5.3.2.2 | Clutter Filter | 5-67 |
| 5-5.3.2.3 | RDASC Processor | 5-68 |
| 5-5.3.2.4 | Filter Output Combiner | 5-68 |
| 5-5.3.2.5 | Clutter Maps | 5-68 |
| 5-5.3.2.6 | Passband Edge Velocity | 5-69 |
| 5-5.3.2.7 | Ground Clutter Reflectivity | 5-69 |
| 5-5.3.2.8 | Clutter Map Circuit | 5-69 |
| 5-5.3.2.9 | Batch Mode | 5-69 |
| 5-5.3.3 | Synchronization | 5-69 |
| 5-5.4 | HSP Processing. | 5-70 |
| 5-5.4.1 | Destination Files | 5-70 |
| 5-5.4.1.1 | Destination 7 | 5-70 |
| 5-5.4.1.2 | Destination 8 | 5-70 |
| 5-5.4.1.3 | Destination 9 | 5-70 |
| 5-5.4.1.4 | Destination 10 | 5-70 |
| 5-5.4.1.5 | Destination 11 | 5-71 |
| 5-5.4.1.6 | Destination 13 | 5-71 |
| 5-5.4.2 | Control Interface (CI) | 5-71 |
| 5-5.4.3 | Video Prescaling | 5-71 |
| 5-5.4.3.1 | PS Test Select Signal | 5-71 |
| 5-5.4.3.2 | I or Q Significant Signal | 5-71 |
| 5-5.4.3.3 | AGC Position Data | 5-71 |
| 5-5.4.3.4 | AGC Selection Circuits | 5-72 |
| 5-5.4.3.5 | AGC Compensation Factor Memory Circuits | 5-72 |
| 5-5.4.3.6 | AGC Comp Factor Signals | 5-72 |
| 5-5.4.3.7 | Log/Linear Select Mux and CH 2 PS Output Register | 5-72 |
| 5-5.4.4 | Ground Clutter Suppression | 5-72 |
| 5-5.4.4.1 | Clutter Filtering | 5-73 |
| 5-5.4.4.2 | Clutter Filter Control | 5-76 |
| 5-5.4.4.3 | Clutter Filter Bypass Map | 5-76 |
| 5-5.4.4.4 | Clutter Filter Notch Width Control Map | 5-78 |
| 5-5.4.4.5 | Clutter Filter-PSP Interface | 5-79 |
| 5-5.4.4.6 | Ground Clutter Suppression Functional Description | 5-82 |
| 5-5.4.4.7 | Clutter Map | 5-88 |
| 5-5.4.5 | HSP Timing and Control | 5-89 |
| 5-5.4.5.1 | Write Strobe Generation | 5-89 |
| 5-5.4.5.2 | CIB Write Strobe Generation | 5-89 |
| 5-5.4.5.3 | Destination 7 Registers | 5-89 |
| 5-5.4.5.4 | Command Generation | 5-89 |
| 5-5.4.5.5 | Capture Filter Codes | 5-90 |
| 5-5.4.5.6 | Clock Distribution | 5-90 |
| 5-5.4.6 | Receiver, Transmitter, and HSP Synchronization | 5-90 |

| Paragraph | Title | Page |
|---|---|---|
| 5-5.4.6.1 | Contiguous Waveforms | 5-91 |
| 5-5.4.6.2 | Batch Waveforms | 5-91 |
| 5-5.4.6.3 | Staggered Pair | 5-91 |
| 5-5.4.6.4 | Synchronizer Functional Description | 5-91 |
| 5-5.4.7 | Receiver and HSP Test Data Generation | 5-94 |
| 5-5.4.7.1 | AGC Test Data | 5-94 |
| 5-5.4.7.2 | Prescaler and A/D Converter Test Selection | 5-95 |
| 5-5.4.7.3 | Test Generator Timing and Control | 5-95 |
| 5-5.4.7.4 | Test Bias Data | 5-95 |
| 5-5.4.7.5 | I, Q, and Log Test Video | 5-96 |
| 5-5.4.7.6 | AGC and Interference Test Data | 5-96 |
| 5-5.4.8 | Receiver Control Data Generation | 5-96 |
| 5-5.4.9 | Interference Tag Processing | 5-96 |
| 5-5.4.10 | HSP and Receiver Status Data Collection | 5-96 |
| 5-5.5 | On-Line Performance Checks. | 5-97 |
| 5-5.5.1 | Checks During Radial Processing | 5-97 |
| 5-5.5.2 | Checks During Startup, Full Restart, and Fast Startup | 5-98 |
| 5-5.6 | Off-Line Diagnostic Tests. | 5-99 |
| Section 5-6. | Programmable Signal Processor (PSP) Functional Block Diagram Description | 5-100 |
| 5-6.1 | Introduction. | 5-100 |
| 5-6.2 | PSP Overview. | 5-100 |
| 5-6.2.1 | RDA Calibration and On-Line Performance Monitoring | 5-101 |
| 5-6.2.2 | Contiguous Surveillance Cut Processing | 5-101 |
| 5-6.2.3 | Contiguous Doppler Without Range Ambiguity Resolution Cut Processing | 5-101 |
| 5-6.2.4 | Contiguous Doppler With Range Ambiguity Resolution Cut Processing | 5-104 |
| 5-6.2.5 | Batch Cut Processing | 5-104 |
| 5-6.3 | PSP Functions. | 5-104 |
| 5-6.3.1 | Input Signal Selection and Distribution (ISSD) Function | 5-104 |
| 5-6.3.1.1 | Real and Imaginary Clutter Filter | 5-104 |
| 5-6.3.1.2 | PSP/RDASC Data Transfer and Control Function | 5-104 |
| 5-6.3.1.3 | AU Memory Addresses | 5-105 |
| 5-6.3.2 | Arithmetic Unit Function | 5-105 |
| 5-6.3.2.1 | Multiplier/Accumulator Function | 5-105 |
| 5-6.3.2.2 | Data Selection and Special Function Logic | 5-105 |
| 5-6.3.2.3 | Status Flags | 5-105 |
| 5-6.3.3 | Arithmetic Control Unit (ACU) | 5-105 |
| 5-6.3.3.1 | Macrocodes | 5-105 |
| 5-6.3.3.2 | Downloading of Microinstructions | 5-106 |
| 5-6.3.3.3 | RALU | 5-106 |

| Paragraph | Title | Page |
|---|---|---|
| 5-6.3.4 | IOC Function | 5-106 |
| 5-6.3.4.1 | Control Commands and Write Data | 5-106 |
| 5-6.3.5 | Standard Maintenance Interface (SMI) | 5-107 |
| 5-6.3.5.1 | PSP Diagnostic Interface | 5-107 |
| 5-6.3.5.2 | RDASC-PSP Diagnostic Interface | 5-107 |
| 5-6.4 | PSP Timing. | 5-107 |
| 5-6.4.1 | Power Turn-On (Reinitialization) | 5-107 |
| 5-6.4.2 | Elevation Layer | 5-107 |
| 5-6.4.3 | One-Degree Radials | 5-107 |
| 5-6.4.4 | Steady State Base Data Generation | 5-108 |
| 5-6.4.5 | Elevation Layer Startup | 5-1 11 |
| 5-6.4.6 | Elevation Layer Stop | 5-1 11 |
| 5-6.5 | Input Signal Selection and Distribution. | 5-1 11 |
| 5-6.5.1 | ISC Control and Parameter Storage | 5-1 11 |
| 5-6.5.1.1 | SIP Signal | 5-1 11 |
| 5-6.5.1.2 | AU Wrap-Around Signal | 5-1 11 |
| 5-6.5.1.3 | Range Cell Counter | 5-1 12 |
| 5-6.5.1.4 | ISC Parameter Storage | 5-1 12 |
| 5-6.5.2 | ISC Memory Address Generation | 5-1 12 |
| 5-6.5.3 | ISC Data Storage and Distribution | 5-1 16 |
| 5-6.5.4 | ISC Interrupt Generation | 5-1 16 |
| 5-6.6 | Arithmetic Unit (AU). | 5-1 17 |
| 5-6.6.1 | Memory Generation Control | 5-1 17 |
| 5-6.6.1.1 | AU Configuration Switches | 5-1 17 |
| 5-6.6.1.2 | MSB Address Bits | 5-1 17 |
| 5-6.6.2 | Ping-Pong/Scratch Pad Memory | 5-1 17 |
| 5-6.6.2.1 | Ping-Pong Input Memory | 5-1 18 |
| 5-6.6.2.2 | Output Data Multiplexer | 5-1 18 |
| 5-6.6.3 | AU Clock and Trigger Generation | 5-1 18 |
| 5-6.6.4 | Multiplier/Accumulator Input Data Selection | 5-1 19 |
| 5-6.6.4.1 | Selected Data | 5-1 19 |
| 5-6.6.4.2 | XS Field | 5-1 19 |
| 5-6.6.5 | Multiplier/Accumulator Function | 5-1 19 |
| 5-6.6.5.1 | MULT RE Signal | 5-1 19 |
| 5-6.6.5.2 | Multiplier Load Control Code | 5-1 19 |
| 5-6.6.5.3 | Input Registers | 5-120 |
| 5-6.6.5.4 | Multiplier Output Latches | 5-120 |
| 5-6.6.5.5 | Error Detection Circuitry | 5-120 |
| 5-6.6.5.6 | Multiplier Bypass Mode | 5-120 |
| 5-6.6.5.7 | Floating-Point Accumulator | 5-121 |
| 5-6.6.6 | Multiplier/Accumulator Calculation (MAC) Result Status Selection and Testing | 5-121 |
| 5-6.6.6.1 | MAC Status | 5-121 |

| Paragraph | Title | Page |
|---|---|---|
| 5-6.6.6.2 | Activate/Deactivate Function | 5-121 |
| 5-6.6.7 | AU Conditional Activate/Deactivate Function | 5-122 |
| 5-6.6.8 | AU Output Data Selection and Special Function Logic | 5-122 |
| 5-6.6.8.1 | Odd Parity | 5-123 |
| 5-6.6.8.2 | Write Mode | 5-123 |
| 5-6.6.8.3 | Result Bus IM | 5-123 |
| 5-6.6.8.4 | Result Bus RE | 5-123 |
| 5-6.6.8.5 | Bit-Set Register | 5-123 |
| 5-6.7 | Arithmetic Control Unit (ACU). | 5-123 |
| 5-6.7.1 | Macrocode Storage | 5-124 |
| 5-6.7.1.1 | Memory Toggling | 5-124 |
| 5-6.7.1.2 | Macro Address Counter | 5-124 |
| 5-6.7.2 | Bit Slice Arithmetic Logic Unit | 5-124 |
| 5-6.7.2.1 | 4-Bit ALU | 5-124 |
| 5-6.7.2.2 | Carry-Look-Ahead Generator | 5-125 |
| 5-6.7.2.3 | Status Signals | 5-125 |
| 5-6.7.3 | System Clock Generation | 5-125 |
| 5-6.7.4 | Active Micro Program Storage and Step Sequencer | 5-125 |
| 5-6.7.4.1 | Microinstruction Bits | 5-128 |
| 5-6.7.4.2 | Microinstruction Address | 5-128 |
| 5-6.7.5 | Microprogram Address Generation | 5-128 |
| 5-6.7.5.1 | Command Register | 5-129 |
| 5-6.7.5.2 | Pipeline Select Multiplexer | 5-129 |
| 5-6.7.5.3 | Interrupt Sync Register | 5-129 |
| 5-6.7.5.4 | DEST BUS | 5-129 |
| 5-6.7.5.5 | Interrupt Vector Latch | 5-129 |
| 5-6.7.5.6 | External Branch Select Multiplexer | 5-129 |
| 5-6.7.5.7 | Microinstruction Word Shadow Register | 5-130 |
| 5-6.7.6 | PSP Source/Destination Select Decodes | 5-130 |
| 5-6.7.7 | Arithmetic Unit Memory Address Generator | 5-131 |
| 5-6.7.7.1 | SELECT MEM ADRS GEN AS DEST Signal | 5-131 |
| 5-6.7.7.2 | DEST = MEM ADRS RGTR FILE Signal | 5-131 |
| 5-6.7.7.3 | RGTR FILE OUTPUT DATA Bus | 5-131 |
| 5-6.7.7.4 | Base Adder | 5-131 |
| 5-6.7.8 | AU Multiplier/Accumulator Coefficient Data Generator | 5-132 |
| 5-6.8 | Input/Output Controller (IOC). | 5-132 |
| 5-6.8.1 | Write Function | 5-132 |
| 5-6.8.2 | Read Function | 5-132 |
| 5-6.8.3 | Generation of Interrupts | 5-132 |
| 5-6.8.4 | Continuous Updating | 5-132 |
| 5-6.8.5 | PSP and HSP Diagnostics | 5-132 |
| 5-6.8.6 | RDASC Lead | 5-132 |

| Paragraph | Title | Page |
|---|---|---|
| 5-6.8.6.1 | PSPI/IOC CMD CODE Bus | 5-132 |
| 5-6.8.6.2 | WR MODE and RD MODE Commands | 5-133 |
| 5-6.8.6.3 | TGL CMD BANK REQ Command | 5-133 |
| 5-6.8.6.4 | DIAG DIM MODE and DIAG SMI MODE Commands | 5-133 |
| 5-6.8.6.5 | TGL CMD BANKS FROM IOC Command | 5-133 |
| 5-6.8.6.6 | Master Clear IOC and PSP Commands | 5-133 |
| 5-6.8.7 | Destination Write Data Selection and Distribution | 5-133 |
| 5-6.8.8 | Read Data Selection Control | 5-134 |
| 5-6.8.9 | PSP Output and Status Memory Control | 5-134 |
| 5-6.8.9.1 | Address/Microinstruction Shadow Register | 5-135 |
| 5-6.8.9.2 | Output Memory Write Sequencer | 5-138 |
| 5-6.8.9.3 | Output Memory Bank | 5-138 |
| 5-6.8.10 | Output Memory Write Data Selection | 5-138 |
| 5-6.8.1 1 | Output and Status Memory | 5-138 |
| 5-6.9 | Standard Maintenance Interface (SMI). | 5-139 |
| 5-6.9.1 | RDASC-PSP Diagnostic Interface and SMI Bus Generator | 5-139 |
| 5-6.9.2 | ISC Diagnostics Interface | 5-140 |
| 5-6.9.2.1 | ISC Diagnostic Interface | 5-140 |
| 5-6.9.2.2 | Diagnostic Force Data | 5-140 |
| 5-6.9.2.3 | Simulated Timing and Control Signals | 5-140 |
| 5-6.9.2.4 | ISC Diagnostic Function | 5-140 |
| 5-6.9.3 | AU1 Diagnostics Interface | 5-140 |
| 5-6.9.3.1 | AU Memory Address | 5-141 |
| 5-6.9.3.2 | Diagnostic Sample Data | 5-141 |
| 5-6.9.3.3 | Real Value Output of Accumulator | 5-141 |
| 5-6.9.3.4 | AU Diagnostic Multiplexers | 5-141 |
| 5-6.9.4 | ACU Diagnostic | 5-141 |
| 5-6.9.5 | ACU Diagnostic Interface | 5-142 |
| 5-6.9.6 | EEPROM Microcode Storage and WCSR Download Control | 5-142 |
| 5-6.9.6.1 | ACU Diagnostic Mode | 5-142 |
| 5-6.9.6.2 | Microinstruction Word Shadow Register | 5-142 |
| 5-6.9.7 | Break Point Processing | 5-143 |
| 5-6.9.8 | IOC Diagnostic | 5-143 |
| 5-6.9.8.1 | SDI Control Logic | 5-143 |
| 5-6.9.8.2 | IOC in Diagnostic Mode | 5-143 |
| 5-6.9.8.3 | IOC Diagnostic Multiplexer | 5-143 |
| 5-6.9.8.4 | Diagnostic/Microinstruction Multiplexer | 5-144 |
| Section 5-7. | RDA Status and Control Processor Functional Block Diagram Description | 5-145 |
| 5-7.1 | General Description. | 5-145 |
| 5-7.2 | Processor System Bus Structure. | 5-146 |

| Paragraph | Title | Page |
|---|---|---|
| 5-7.2.1 | Synchronous Operation | 5-146 |
| 5-7.3 | Timing Function. | 5-146 |
| 5-7.3.1 | S-Bus Timing | 5-146 |
| 5-7.3.2 | CDS Bus Timing | 5-146 |
| 5-7.3.3 | Universal Clock (UCLK) | 5-147 |
| 5-7.3.4 | Time of Day (TODY) Clock | 5-147 |
| 5-7.3.5 | Loader Storage Unit (LSU) | 5-147 |
| 5-7.4 | Central Processing Unit (CPU). | 5-147 |
| 5-7.4.1 | S-Bus | 5-147 |
| 5-7.4.2 | Bus Transfers | 5-148 |
| 5-7.4.3 | Parity | 5-148 |
| 5-7.4.4 | Memory Operations | 5-148 |
| 5-7.4.5 | Messages, Broadcasts, and Direct Input/Output (I/O) on F-Path | 5-148 |
| 5-7.4.6 | Input/Output (I/O) | 5-148 |
| 5-7.4.7 | Cache Operation | 5-148 |
| 5-7.4.8 | Processing Element | 5-149 |
| 5-7.5 | Main Memory Function. | 5-149 |
| 5-7.6 | Direct Memory Interface (DMI) Function. | 5-152 |
| 5-7.6.1 | Multiplexer (MUX) Bus | 5-152 |
| 5-7.6.2 | Direct Memory Access (DMA) Bus | 5-152 |
| 5-7.6.3 | Direct Input/Output (I/O) Operation | 5-152 |
| 5-7.6.4 | Direct Memory Operations | 5-153 |
| 5-7.7 | Mass Storage and Archiving Function. | 5-154 |
| 5-7.7.1 | Selector Channel (SELCH) UD5A12A13 | 5-154 |
| 5-7.7.2 | Optical Disk Controller (ODC) | 5-154 |
| 5-7.7.3 | Streaming Tape Drive | 5-154 |
| 5-7.7.4 | Megabyte Fixed Disk | 5-154 |
| 5-7.7.5 | Archive II Controller | 5-154 |
| 5-7.8 | Peripheral Device Interface Function. | 5-154 |
| 5-7.8.1 | RS-232 Communication with DAU Interface | 5-155 |
| 5-7.8.2 | RS-232 Communication with RDA Maintenance Console | 5-155 |
| 5-7.8.3 | RS-232 Communication with Servo Antenna Positioning | 5-155 |
| 5-7.9 | PSP/RDASC Interface Function. | 5-155 |
| 5-7.9.1 | Programmable Signal Processor Interface (PSPI) UD5A12A14 | 5-155 |
| 5-7.9.2 | Selector Channel (SELCH) UD5A12A15 | 5-155 |
| 5-7.10 | Control/Diagnostic System (CDS) Function. | 5-156 |
| 5-7.10.1 | Control/Diagnostic System (CDS) Operating Modes | 5-156 |
| 5-7.10.2 | Overview of CDS Hardware Elements | 5-156 |
| 5-7.10.3 | CDS Master Circuitry | 5-156 |
| 5-7.10.4 | Slave Circuitry | 5-157 |
| 5-7.10.5 | CDS Bus | 5-157 |
| 5-7.10.6 | Control/Diagnostic System (CDS) Patch Panel UD5A15 | 5-157 |

| Paragraph | Title | Page |
|---|---|---|
| 5-7.10.7 | System Port/CDS Patch Panel Path | 5-157 |
| 5-7.11 | On-Line Performance Monitoring. | 5-157 |
| 5-7.12 | Off-Line Fault Isolation. | 5-158 |
| Section 5-8. | VMEbus to Concurrent I/O Bus Interface Functional Block Diagram Description | 5-164 |
| 5-8.1 | General Description. | 5-164 |
| 5-8.2 | VCI-C Board. | 5-164 |
| 5-8.3 | VCI-V Board. | 5-167 |
| 5-8.4 | Cable Bus. | 5-167 |
| 5-8.5 | Wideband Communications Interface. | 5-170 |
| Section 5-9. | RDA Status and Control Interface Functional Block Diagram Description | 5-174 |
| 5-9.1 | Introduction. | 5-174 |
| 5-9.1.1 | Data Acquisition Interface Overview | 5-174 |
| 5-9.1.2 | Purpose | 5-175 |
| 5-9.1.3 | Interface Description | 5-175 |
| 5-9.2 | Data Acquisition Interface Functional Description. | 5-175 |
| 5-9.2.1 | RDASC/DAU Command Data Interface | 5-175 |
| 5-9.2.2 | DAU/RDASC Status Data Interface | 5-178 |
| 5-9.2.3 | Discrete Status Data Monitoring | 5-186 |
| 5-9.2.4 | Analog Status Data Monitoring | 5-186 |
| 5-9.3 | RDASC/DAU Command Data Interface Functional Description. | 5-186 |
| 5-9.3.1 | Asynchronous Reception and Demultiplexing | 5-187 |
| 5-9.3.2 | Time-Out Interlock Logic | 5-187 |
| 5-9.3.3 | Relay Driver Logic | 5-188 |
| 5-9.3.3.1 | Relay DR2 Signal | 5-188 |
| 5-9.3.3.2 | Relay DR3 Signal | 5-188 |
| 5-9.3.3.3 | Relay DR4 Signal | 5-188 |
| 5-9.3.3.4 | ANT CMD Relay Signal | 5-188 |
| 5-9.3.3.5 | Status/Alarm Signal | 5-189 |
| 5-9.3.4 | Audible Alarm Logic | 5-189 |
| 5-9.3.5 | Transmitter Control | 5-189 |
| 5-9.3.5.1 | WG SW Transition Interlock | 5-190 |
| 5-9.3.5.2 | WG SW Antenna Position Indicator | 5-190 |
| 5-9.3.5.3 | Circulator Overtemp Interlock | 5-190 |
| 5-9.3.5.4 | WG Pressure/Humidity Alarm | 5-190 |
| 5-9.3.5.5 | Spectrum Filter Pressure Fault | 5-190 |
| 5-9.3.6 | Pedestal Control | 5-190 |
| 5-9.4 | Redundant RDASC Interprocessor Link. | 5-191 |
| 5-9.5 | DAU/RDASC Status Data Interface Functional Description. | 5-194 |

| Paragraph | Title | Page |
|---|---|---|
| 5-9.5.1 | Reception and Selection Circuitry | 5-194 |
| 5-9.5.1.1 | TX RECYCLE | 5-194 |
| 5-9.5.1.2 | TX INOP | 5-194 |
| 5-9.5.1.3 | TX HV OFF | 5-194 |
| 5-9.5.2 | Master Timing | 5-194 |
| 5-9.5.3 | UART Transmitter Control and Strobe Generation | 5-194 |
| 5-9.5.4 | RS-232 Asynchronous Transmission | 5-197 |
| 5-9.6 | Discrete Status Data Monitoring Functional Description. | 5-197 |
| 5-9.7 | Analog Status Data Monitoring Functional Description. | 5-198 |
| 5-9.7.1 | Analog Signal Reception and Scaling Function | 5-198 |
| 5-9.7.2 | Temperature Sensors | 5-200 |
| 5-9.8 | On-Line Performance Monitoring. | 5-200 |
| 5-9.9 | Off-Line Diagnostics. | 5-203 |
| Section 5-10. | Microwave Distribution | 5-204 |
| 5-10.1 | Introduction. | 5-204 |
| 5-10.2 | Electrical Equipment Shelter Waveguide Components. | 5-204 |
| 5-10.3 | Antenna/Pedestal Assembly Waveguide Components. | 5-205 |
| 5-10.4 | On-Line Performance Monitoring. | 5-205 |
| 5-10.4.1 | Waveguide Switch Failure | 5-205 |
| 5-10.4.2 | WG/PFN Transfer Interlock | 5-205 |
| 5-10.4.3 | Waveguide ARC/VSWR | 5-205 |
| 5-10.4.4 | Circulator Overtemp | 5-206 |
| 5-10.4.5 | Spectrum Filter Pressure | 5-206 |
| 5-10.4.6 | Waveguide Humidity/Pressure Fault | 5-206 |
| Section 5-11. | Antenna Positioning Electronics | 5-207 |
| 5-11.1 | Introduction. | 5-207 |
| 5-11.2 | Antenna Positioning Overview. | 5-207 |
| 5-11.2.1 | RDASC Processor | 5-208 |
| 5-11.2.2 | Azimuth and Elevation Housing | 5-208 |
| 5-11.2.3 | Azimuth Servo Motor | 5-208 |
| 5-11.2.4 | Tachometers | 5-208 |
| 5-11.2.5 | Antenna Limits and Protections | 5-208 |
| 5-11.2.6 | Status and Safety Elements | 5-208 |
| 5-11.2.7 | Self-Tests | 5-209 |
| 5-11.3 | Antenna Positioning Electronics Functional Description. | 5-211 |
| 5-11.3.1 | Servo Microprocessor Control | 5-211 |
| 5-11.3.2 | Antenna Position Data Interface | 5-211 |
| 5-11.3.3 | Servo Fault Monitoring | 5-211 |
| 5-11.3.4 | Servo Loop Electronics | 5-211 |

| Paragraph | Title | Page |
|---|---|---|
| 5-11.3.5 | RDA Servo Interface | 5-211 |
| 5-11.3.6 | Antenna | 5-211 |
| 5-11.3.7 | Microprocessor | 5-211 |
| 5-11.4 | Servo Microprocessor Control Function. | 5-211 |
| 5-11.4.1 | Microprocessor Control Memory | 5-212 |
| 5-11.4.2 | Microprocessor Address Information | 5-212 |
| 5-11.5 | Antenna Position Data Interface Function. | 5-212 |
| 5-11.6 | Servo Fault Monitoring Function. | 5-213 |
| 5-11.6.1 | Status and Error Signals | 5-213 |
| 5-11.6.2 | Microprocessor Control | 5-213 |
| 5-11.7 | Servo Loop Electronics. | 5-213 |
| 5-11.7.1 | Command Data | 5-213 |
| 5-11.7.2 | AZ D/A OUT Signal | 5-213 |
| 5-11.8 | RDA Servo Interface. | 5-215 |
| 5-11.9 | On-Line Performance Monitoring. | 5-218 |
| 5-11.9.1 | Self-Test 1 | 5-218 |
| 5-11.9.2 | Self-Test 2 | 5-218 |
| 5-11.9.3 | Pedestal BIT Data | 5-218 |
| 5-11.9.4 | CPCI 01 (RDASC) Software | 5-218 |
| 5-11.9.5 | Cold Startup or Full Restart Command | 5-218 |
| 5-11.9.6 | Fast Restart | 5-218 |
| 5-11.9.7 | Normal I/O Processing | 5-218 |
| 5-11.9.8 | Antenna Positioning Servo | 5-219 |
| 5-11.9.9 | Angle Rate Match Flag | 5-219 |
| 5-11.9.10 | Park Pedestal Command | 5-219 |
| 5-11.10 | Off-Line Diagnostics. | 5-219 |
| 5-11.10.1 | Pedestal Diagnostics | 5-219 |
| 5-11.10.1.1 | Subtest 1 - Voltage Check | 5-219 |
| 5-11.10.1.2 | Subtest 2 - Self-Test 1 | 5-219 |
| 5-11.10.1.3 | Subtest 3 - Pedestal BIT Check | 5-219 |
| 5-11.10.1.4 | Subtest 4 - Self-Test 2 | 5-219 |
| 5-11.10.2 | Manual Pedestal Control | 5-220 |
| Section 5-12. | Power Distribution | 5-224 |
| 5-12.1 | Introduction. | 5-224 |
| 5-12.2 | RDA Group AC Power Generation and Distribution. | 5-224 |
| 5-12.2.1 | Auto-Transfer Switch UD10A1 | 5-225 |
| 5-12.2.2 | Generator Shelter Main Power Distribution Panel UD10A2 | 5-225 |
| 5-12.2.3 | Equipment Shelter Main Power Distribution Panel UD7A2 | 5-225 |
| 5-12.2.4 | Equipment Shelter Secondary Power Distribution Panel UD7A3 | 5-226 |
| 5-12.2.5 | FAA Redundant Equipment Shelter Main Power Distribution Panel UD7A2 | 5-226 |

| Paragraph | Title | Page |
|---|---|---|
| 5-12.2.6 | FAA Redundant Equipment Shelter Secondary Power Distribution Panel #1 UD7A3 | 5-227 |
| 5-12.2.7 | FAA Redundant Equipment Shelter Secondary Power Distribution Panel #2 UD7A29 | 5-227 |
| 5-12.2.8 | NWS Redundant Equipment Shelter Main Power Distribution Panel UD7A2 | 5-228 |
| 5-12.2.9 | NWS Redundant Equipment Shelter Secondary Power Distribution Panel #1 UD7A3 | 5-229 |
| 5-12.2.10 | NWS Redundant Equipment Shelter Secondary Power Distribution Panel #2 UD7A29 | 5-229 |
| 5-12.2.1 1 | NWS Redundant Equipment Shelter Secondary Power Distribution Panel #3 UD7A30 | 5-229 |
| 5-12.3 | RDA Equipment Power Distribution. | 5-230 |
| 5-12.3.1 | RDA Receiver Cabinet UD4 Power Distribution | 5-230 |
| 5-12.3.1.1 | Receiver Cabinet UD4 AC Distribution | 5-230 |
| 5-12.3.1.2 | Power Supply Outputs | 5-231 |
| 5-12.3.2 | RDA Data Processor Cabinet UD5 Power Distribution | 5-233 |
| 5-12.3.2.1 | RDADP Cabinet UD5 AC Power Distribution | 5-233 |
| 5-12.3.2.2 | RDADP Cabinet UD5 DC Power Distribution | 5-237 |
| 5-12.4 | NWS Redundant Configuration Remote Power Shutdown. | 5-238 |
| Section 5-13. | Redundant Switching | 5-239 |
| 5-13.1 | Introduction. | 5-239 |
| 5-13.2 | Antenna Control. | 5-239 |
| 5-13.3 | Waveguide Interlock Switch. | 5-240 |
| 5-13.4 | Pedestal Control. | 5-240 |
| 5-13.5 | AC Power Switching. | 5-241 |
| 5-13.6 | Pedestal Voltage. | 5-241 |
| 5-13.7 | NWS Wideband Communications Switching. | 5-241 |
| Section 5-14. | Control RDA Program Function, Functional Description | 5-243 |
| 5-14.1 | Introduction. | 5-243 |
| 5-14.2 | RDA States. | 5-243 |
| 5-14.2.1 | RDA Operate State | 5-243 |
| 5-14.2.2 | RDA Standby State | 5-244 |
| 5-14.2.3 | RDA Off-Line Operate State | 5-244 |
| 5-14.2.4 | RDA Playback State | 5-244 |
| 5-14.2.5 | Calibration Processing | 5-245 |
| 5-14.2.6 | Local or Either Control | 5-245 |
| 5-14.2.7 | Change Command | 5-245 |
| 5-14.2.8 | RDA Transition, Local to Either Control | 5-245 |
| 5-14.2.9 | RDA Transition, Either to Operate Local Control | 5-245 |
| 5-14.2.10 | RDA Transition, Either to Operate Off-line Control | 5-245 |

| Paragraph | Title | Page |
|---|---|---|
| 5-14.2.1 1 | RDA Transition from Either to Playback Local | 5-245 |
| 5-14.2.12 | RDA Transition between Off-line, Standby, Playback, and Operate | 5-246 |
| 5-14.2.13 | Radar Data Output Buffer Overflow | 5-246 |
| 5-14.2.14 | RDASC | 5-246 |
| 5-14.2.15 | RDA Operating Modes | 5-246 |
| 5-14.2.16 | Specific Requirements | 5-246 |
| 5-14.2.17 | Cold Startup | 5-246 |
| 5-14.2.17.1 | File Loading Failure | 5-247 |
| 5-14.2.17.2 | RDA Control/Operating State | 5-248 |
| 5-14.2.17.3 | State File | 5-248 |
| 5-14.2.17.4 | RDA Application Software | 5-248 |
| 5-14.2.18 | Warm Startup | 5-249 |
| 5-14.2.19 | Restart | 5-249 |
| 5-14.2.19.1 | Full Restart | 5-249 |
| 5-14.2.19.2 | Fast Restart | 5-250 |
| 5-14.2.19.3 | Power Outage Occurrence | 5-250 |
| 5-14.2.19.4 | Control RDA Function | 5-251 |
| 5-14.2.19.5 | Radar Data Collection | 5-251 |
| 5-14.2.19.6 | Fast Restart Control Sequence | 5-251 |
| 5-14.2.20 | Power Control | 5-251 |
| 5-14.2.20.1 | Power Commands | 5-251 |
| 5-14.2.20.2 | RDA Power Subsystem | 5-252 |
| 5-14.2.20.3 | Power Control Command | 5-252 |
| 5-14.2.20.4 | Valid Commands | 5-252 |
| 5-14.2.20.5 | Power Source Switchover | 5-252 |
| 5-14.2.20.6 | Command Switchover | 5-252 |
| 5-14.2.20.7 | Operating Under Backup Power | 5-252 |
| 5-14.2.21 | Transmitter Control | 5-252 |
| 5-14.2.21.1 | Antenna | 5-252 |
| 5-14.2.21.2 | Override Radiate Inhibit Command | 5-253 |
| 5-14.2.22 | Redundant Channel Control | 5-253 |
| 5-14.2.22.1 | Status Request Command | 5-253 |
| 5-14.2.22.2 | Command Other Channel to Standby Command | 5-253 |
| 5-14.2.22.3 | Receiver Waveguide Switch | 5-254 |
| 5-14.2.22.4 | Interprocessor Status Data | 5-254 |
| 5-14.2.22.5 | Controlling Channel | 5-254 |
| 5-14.3 | Volume Coverage Control. | 5-259 |
| 5-14.3.1 | Selected VCP | 5-259 |
| 5-14.3.2 | Maintenance VCP | 5-259 |
| 5-14.3.3 | Volume Scan | 5-259 |
| 5-14.3.3.1 | Start Volume Scan | 5-259 |
| 5-14.3.3.2 | Elevation Cut Startup | 5-259 |

| Paragraph | Title | Page |
|---|---|---|
| 5–14.3.3.3 | End of PRF Sector | 5–260 |
| 5–14.3.3.4 | End of Cut | 5–260 |
| 5–14.3.3.5 | Transition to New Elevation | 5–260 |
| 5–14.3.3.6 | New Elevation Cut | 5–260 |
| 5–14.3.3.7 | End of Scan Period | 5–260 |
| **CHAPTER 6** | **MAINTENANCE** | **6–1** |
| Section 6–1. | Introduction | 6–1 |
| 6–1.1 | General. | 6–1 |
| 6–1.1.1 | Maintenance Concept | 6–1 |
| 6–1.1.1.1 | General Maintenance | 6–2 |
| 6–1.1.1.2 | On–Site Maintenance | 6–2 |
| 6–1.1.1.3 | Organizational Maintenance | 6–2 |
| 6–1.1.1.4 | Off–Equipment Maintenance | 6–2 |
| 6–1.1.2 | On–Line Status and Performance Monitoring | 6–2 |
| 6–1.1.3 | Transient Fault Recovery Procedures | 6–2 |
| 6–1.2 | Preventive Maintenance Procedures. | 6–3 |
| 6–1.3 | Primary Fault Isolation and Operational Checks. | 6–3 |
| 6–1.4 | Secondary Fault Isolation. | 6–3 |
| 6–1.5 | Corrective Maintenance. | 6–3 |
| 6–1.6 | Alignments and Adjustments. | 6–4 |
| 6–1.7 | Component Location and Identification. | 6–4 |
| 6–1.8 | Use of Commercial Manuals. | 6–4 |
| 6–1.9 | Tools, Test Equipment and Consumables. | 6–4 |
| 6–1.10 | System Startup and Shutdown Procedures. | 6–4 |
| 6–1.11 | Diagnostic Test Program Procedures. | 6–5 |
| Section 6–2. | Preventive Maintenance | 6–6 |
| 6–2.1 | Introduction. | 6–6 |
| Section 6–3. | Primary Fault Isolation | 6–9 |
| 6–3.1 | Introduction. | 6–9 |
| 6–3.2 | Fault Isolation Flowcharts. | 6–9 |
| 6–3.2.1 | System Fault Isolation Flowchart | 6–9 |
| 6–3.2.2 | RDA Fault Isolation Flowcharts | 6–9 |
| 6–3.2.3 | Operability Test | 6–9 |
| 6–3.2.4 | Quick Reference Chart | 6–9 |
| 6–3.2.5 | Flowchart Comments | 6–10 |
| 6–3.2.6 | Flowchart Notesheets | 6–10 |
| 6–3.2.7 | Secondary Fault Isolation | 6–10 |

| Paragraph | Title | Page |
|---|---|---|
| 6–3.2.8 | Flowchart Symbol Convention | 6–10 |
| 6–3.2.9 | Cabling and Connector Problems | 6–10 |
| 6–3.3 | Flowchart Notes. | 6–10 |
| 6–3.4 | RDA Alarms. | 6–11 |
| 6–3.4.1 | Alarm Types | 6–11 |
| 6–3.4.2 | Alarm Categories and Maintenance Modes | 6–11 |
| 6–3.4.2.1 | Inoperative (INOP) Alarms | 6–12 |
| 6–3.4.2.2 | Maintenance Mandatory (MAM) Alarms | 6–12 |
| 6–3.4.2.3 | Maintenance Required (MAR) Alarms | 6–12 |
| 6–3.4.2.4 | Secondary Alarms | 6–12 |
| 6–3.5 | RDASC Error Messages. | 6–12 |
| 6–3.6 | Primary Fault Isolation Flowcharts. | 6–14 |
| Section 6–4. | Secondary Fault Isolation | 6–259 |
| 6–4.1 | Introduction. | 6–259 |
| 6–4.2 | Transmitter Functional Group. | 6–259 |
| 6–4.3 | Antenna/Pedestal Functional Group. | 6–341 |
| 6–4.3.1 | ANT1 | 6–341 |
| 6–4.3.2 | ANT2 | 6–341 |
| 6–4.3.3 | ANT3 | 6–345 |
| 6–4.3.4 | ANT4 | 6–345 |
| 6–4.3.5 | ANT5 | 6–346 |
| 6–4.3.6 | ANT6 | 6–346 |
| 6–4.3.7 | ANT7 | 6–347 |
| 6–4.3.8 | ANT8 | 6–348 |
| 6–4.4 | Receiver Functional Group. | 6–348 |
| 6–4.4.1 | R1 | 6–348 |
| 6–4.4.2 | R2 | 6–351 |
| 6–4.4.3 | R3 | 6–351 |
| 6–4.4.4 | R4 | 6–355 |
| 6–4.4.5 | R5 | 6–358 |
| 6–4.4.6 | R6 | 6–359 |
| 6–4.4.7 | R7 | 6–361 |
| 6–4.4.8 | R8. | 6–362 |
| 6–4.4.9 | R9 | 6–363 |
| 6–4.4.10 | R10 | 6–365 |
| 6–4.4.11 | R11 | 6–366 |
| 6–4.4.12 | R12. | 6–367 |
| 6–4.5 | Hardwired Signal Processor Functional Group. | 6–371 |
| 6–4.5.1 | HSP1 through HSP3 and HSP5 through HSP8 General Procedure | 6–372 |
| 6–4.5.2 | HSP4 Procedure | 6–372 |
| 6–4.5.3 | HSP Subtest Setup | 6–373 |

| Paragraph | Title | Page |
|---|---|---|
| 6-4.5.4 | Logic Probe Setup | 6-374 |
| 6-4.5.5 | Wiring and Backplane Continuity Check | 6-375 |
| 6-4.6 | Programmable Signal Processor Functional Group. | 6-418 |
| 6-4.7 | RDASC Functional Group. | 6-418 |
| 6-4.7.1 | RDA1 | 6-418 |
| 6-4.7.2 | RDA2 | 6-418 |
| 6-4.7.3 | Confidence Test Error Messages | 6-418 |
| 6-4.7.4 | M3200 (11) Error Messages | 6-418 |
| 6-4.8 | Maintenance Panel/DAU Functional Group. | 6-446 |
| 6-4.8.1 | Equipment and Tools Required | 6-446 |
| 6-4.8.2 | Initial Conditions/Preliminary Setup | 6-446 |
| 6-4.8.3 | M1. | 6-446 |
| 6-4.8.4 | M2. | 6-449 |
| Section 6-5. | Replacement and Setup Procedures | 6-455 |
| 6-5.1 | Introduction. | 6-455 |
| 6-5.1.1 | Electromechanical Assemblies | 6-455 |
| 6-5.1.2 | Printed Circuit Cards | 6-455 |
| 6-5.1.3 | Universal Communication Devices | 6-455 |
| 6-5.1.4 | Lifting with Davit Crane and Maintenance Hatch | 6-456 |
| 6-5.1.4.1 | Equipment and Tools Required | 6-456 |
| 6-5.1.4.2 | Initial Conditions/Preliminary Setup | 6-456 |
| 6-5.1.4.3 | Procedure | 6-456 |
| 6-5.1.5 | Recording Maintenance Sessions using RDASOT | 6-464 |
| 6-5.2 | Special Considerations for Replacement Procedures. | 6-464 |
| 6-5.2.1 | Safety | 6-465 |
| 6-5.2.2 | Software Shutdown | 6-465 |
| 6-5.2.3 | Power Turn-Off | 6-465 |
| 6-5.2.4 | Inspection | 6-465 |
| 6-5.2.5 | Related Procedures | 6-465 |
| 6-5.2.6 | Handling of Electrostatic Sensitive Devices | 6-465 |
| 6-5.2.6.1 | Card Removal/Installation | 6-465 |
| 6-5.2.6.2 | ESD DIP Switch Setting | 6-465 |
| 6-5.3 | RDA Group Startup and Shutdown Procedures. | 6-466 |
| 6-5.3.1 | RDA Group Shutdown | 6-466 |
| 6-5.3.2 | RDA Group Startup | 6-467 |
| 6-5.3.2.1 | Special Considerations and Notes | 6-467 |
| 6-5.4 | Signal Processor UD5A9/A10 Circuit Card Replacement. | 6-470 |
| 6-5.4.1 | Signal Processor Circuit Card (UD5A9A1 thru A19 and UD5A10A1 thru A8) Removal and Insertion | 6-470 |
| 6-5.4.2 | Signal Processor DIP Switch Locations And Settings | 6-509 |
| 6-5.4.3 | PSP/HSP UD5A9/A10 Card Replacement Procedure | 6-509 |

| Paragraph | Title | Page |
|---|---|---|
| 6-5.4.3.1 | Equipment and Tools Required | 6-509 |
| 6-5.4.3.2 | Initial Conditions/Preliminary Setup | 6-509 |
| 6-5.4.3.3 | Replacement Procedure | 6-509 |
| 6-5.4.4 | UD5A9A6 ACU3 Card EEPROM Burn Procedure | 6-512 |
| 6-5.4.4.1 | Equipment and Tools Required | 6-512 |
| 6-5.4.4.2 | Initial Conditions/Preliminary Setup | 6-512 |
| 6-5.4.4.3 | Replacement Procedure | 6-512 |
| 6-5.5 | RDA Status and Control Processor UD5A12 Circuit Card Replacement. | 6-516 |
| 6-5.5.1 | Removal and Insertion General Information | 6-516 |
| 6-5.5.2 | Strapping and Switches | 6-516 |
| 6-5.5.2.1 | Input/Output (I/O) Chassis Backpanel Wiring | 6-516 |
| 6-5.5.2.2 | Interrupt Priority Backpanel Wiring | 6-516 |
| 6-5.5.2.3 | Input/Output (I/O) Chassis Terminators | 6-521 |
| 6-5.5.3 | Half-Board Disassembly and Assembly | 6-526 |
| 6-5.5.4 | RDA Status and Control Processor UD5A12 Circuit Card Replacement Procedure | 6-526 |
| 6-5.5.4.1 | Equipment and Tools Required | 6-526 |
| 6-5.5.4.2 | Initial Conditions/Preliminary Setup | 6-526 |
| 6-5.5.4.3 | Replacement Procedure | 6-526 |
| 6-5.5.5 | Time of Day (TODY) Battery UD5A12A20A1BT1/BT2 Replacement Procedure | 6-529 |
| 6-5.5.5.1 | Equipment and Tools Required | 6-529 |
| 6-5.5.5.2 | Initial Conditions/Preliminary Setup | 6-529 |
| 6-5.5.5.3 | Replacement Procedure | 6-529 |
| 6-5.6 | RF Frequency Generator UD4A1 Replacement Procedure. | 6-541 |
| 6-5.6.1 | Equipment and Tools Required | 6-541 |
| 6-5.6.2 | Initial Conditions/Preliminary Setup | 6-541 |
| 6-5.6.3 | Replacement Procedure | 6-541 |
| 6-5.7 | Pre-Select Bandpass Filter UD4A4 Replacement Procedure. | 6-542 |
| 6-5.7.1 | Equipment and Tools Required | 6-542 |
| 6-5.7.2 | Initial Conditions/Preliminary Setup | 6-542 |
| 6-5.7.3 | Replacement Procedure | 6-542 |
| 6-5.8 | Mixer/Preamp UD4A5 Replacement Procedure. | 6-543 |
| 6-5.8.1 | Equipment and Tools Required | 6-543 |
| 6-5.8.2 | Initial Conditions/Preliminary Setup | 6-544 |
| 6-5.8.3 | Replacement Procedure | 6-544 |
| 6-5.9 | Matched Bandpass Filter UD4A6 Replacement Procedure. | 6-545 |
| 6-5.9.1 | Equipment and Tools Required | 6-546 |
| 6-5.9.2 | Initial Conditions/Preliminary Setup | 6-546 |
| 6-5.9.3 | Replacement Procedure | 6-546 |
| 6-5.10 | Coax Delay Line UD4A7 Replacement Procedure. | 6-547 |
| 6-5.10.1 | Equipment and Tools Required | 6-547 |
| 6-5.10.2 | Initial Conditions/Preliminary Setup | 6-547 |

| Paragraph | Title | Page |
|---|---|---|
| 6-5.10.3 | Replacement Procedure | 6-548 |
| 6-5.1 1 | IF Attenuator UD4A8 Replacement Procedure. | 6-549 |
| 6-5.1 1.1 | Equipment and Tools Required | 6-549 |
| 6-5.1 1.2 | Initial Conditions/Preliminary Setup | 6-549 |
| 6-5.1 1.3 | Replacement Procedure | 6-549 |
| 6-5.12 | IF Amplifier/Limiter UD4A9 Replacement Procedure. | 6-550 |
| 6-5.12.1 | Equipment and Tools Required | 6-550 |
| 6-5.12.2 | Initial Conditions/Preliminary Setup | 6-550 |
| 6-5.12.3 | Replacement Procedure | 6-551 |
| 6-5.13 | I/Q Phase Detector UD4A10 Replacement Procedure. | 6-552 |
| 6-5.13.1 | Equipment and Tools Required | 6-552 |
| 6-5.13.2 | Initial Conditions/Preliminary Setup | 6-552 |
| 6-5.13.3 | Replacement Procedure | 6-552 |
| 6-5.14 | A/D Converter UD4A11 Replacement Procedure. | 6-553 |
| 6-5.14.1 | Equipment and Tools Required | 6-553 |
| 6-5.14.2 | Initial Conditions/Preliminary Setup | 6-553 |
| 6-5.14.3 | Replacement Procedure | 6-554 |
| 6-5.15 | Multi-Output Log Amp Detector UD4A12 Replacement Procedure. | 6-554 |
| 6-5.15.1 | Equipment and Tools Required | 6-554 |
| 6-5.15.2 | Initial Conditions/Preliminary Setup | 6-554 |
| 6-5.15.3 | Replacement Procedure | 6-555 |
| 6-5.16 | AGC Controller UD4A13 Replacement Procedure. | 6-555 |
| 6-5.16.1 | Equipment and Tools Required | 6-555 |
| 6-5.16.2 | Initial Conditions/Preliminary Setup | 6-556 |
| 6-5.16.3 | Replacement Procedure | 6-556 |
| 6-5.17 | Guard Band IF Amplifier UD4A14 Replacement Procedure. | 6-556 |
| 6-5.17.1 | Equipment and Tools Required | 6-556 |
| 6-5.17.2 | Initial Conditions/Preliminary Setup | 6-557 |
| 6-5.17.3 | Replacement Procedure | 6-557 |
| 6-5.18 | Guard Band Filter UD4A15/A16 Replacement Procedure. | 6-558 |
| 6-5.18.1 | Equipment and Tools Required | 6-558 |
| 6-5.18.2 | Initial Conditions/Preliminary Setup | 6-559 |
| 6-5.18.3 | Replacement Procedure | 6-559 |
| 6-5.19 | Multi- Output Log Amp Detector UD4A17/A18 Replacement Procedure. | 6-560 |
| 6-5.19.1 | Equipment and Tools Required | 6-560 |
| 6-5.19.2 | Initial Conditions/Preliminary Setup | 6-560 |
| 6-5.19.3 | Replacement Procedure | 6-561 |
| 6-5.20 | Interference Detector UD4A19 Replacement Procedure. | 6-561 |
| 6-5.20.1 | Equipment and Tools Required | 6-561 |
| 6-5.20.2 | Initial Conditions/Preliminary Setup | 6-562 |
| 6-5.20.3 | Replacement Procedure | 6-562 |
| 6-5.21 | Four-Way Power Divider UD4A20 Replacement Procedure. | 6-562 |

| Paragraph | Title | Page |
|---|---|---|
| 6-5.21.1 | Equipment and Tools Required | 6-563 |
| 6-5.21.2 | Initial Conditions/Preliminary Setup | 6-563 |
| 6-5.21.3 | Replacement Procedure | 6-563 |
| 6-5.22 | Microwave Delay Line UD4A21 Replacement Procedure. | 6-564 |
| 6-5.22.1 | Equipment and Tools Required | 6-564 |
| 6-5.22.2 | Initial Conditions/Preliminary Setup | 6-564 |
| 6-5.22.3 | Replacement Procedure | 6-565 |
| 6-5.23 | Four Position RF Switch UD4A22 Replacement Procedure. | 6-566 |
| 6-5.23.1 | Equipment and Tools Required | 6-566 |
| 6-5.23.2 | Initial Conditions/Preliminary Setup | 6-566 |
| 6-5.23.3 | Replacement Procedure | 6-566 |
| 6-5.24 | RF Test Attenuator UD4A23 Replacement Procedure. | 6-568 |
| 6-5.24.1 | Equipment and Tools Required | 6-568 |
| 6-5.24.2 | Initial Conditions/Preliminary Setup | 6-568 |
| 6-5.24.3 | Replacement Procedure | 6-568 |
| 6-5.25 | Two Position RF Switch UD4A24 Replacement Procedure. | 6-569 |
| 6-5.25.1 | Equipment and Tools Required | 6-569 |
| 6-5.25.2 | Initial Conditions/Preliminary Setup | 6-569 |
| 6-5.25.3 | Replacement Procedure | 6-569 |
| 6-5.26 | RF Noise Source UD4A25 Replacement Procedure. | 6-570 |
| 6-5.26.1 | Equipment and Tools Required | 6-570 |
| 6-5.26.2 | Initial Conditions/Preliminary Setup | 6-571 |
| 6-5.26.3 | Replacement Procedure | 6-571 |
| 6-5.27 | Power Monitor UD4A26 Replacement Procedure. | 6-572 |
| 6-5.27.1 | Equipment and Tools Required | 6-572 |
| 6-5.27.2 | Initial Conditions/Preliminary Setup | 6-572 |
| 6-5.27.3 | Replacement Procedure | 6-572 |
| 6-5.28 | Multi-Position RF Select Switch UD4A27 Replacement Procedure. | 6-573 |
| 6-5.28.1 | Equipment and Tools Required | 6-573 |
| 6-5.28.2 | Initial Conditions/Preliminary Setup | 6-573 |
| 6-5.28.3 | Replacement Procedure | 6-573 |
| 6-5.29 | Multi-Position IF Select Switch UD4A28 Replacement Procedure. | 6-574 |
| 6-5.29.1 | Equipment and Tools Required | 6-574 |
| 6-5.29.2 | Initial Conditions/Preliminary Setup | 6-575 |
| 6-5.29.3 | Replacement Procedure | 6-575 |
| 6-5.30 | RF Log Amplifier/Detector UD4A29 Replacement Procedure. | 6-576 |
| 6-5.30.1 | Equipment and Tools Required | 6-576 |
| 6-5.30.2 | Initial Conditions/Preliminary Setup | 6-576 |
| 6-5.30.3 | Replacement Procedure | 6-576 |
| 6-5.31 | IF Log Amplifier/Detector UD4A30 Replacement Procedure. | 6-577 |
| 6-5.31.1 | Equipment and Tools Required | 6-577 |
| 6-5.31.2 | Initial Conditions/Preliminary Setup | 6-577 |

| Paragraph | Title | Page |
|---|---|---|
| 6-5.31.3 | Replacement Procedure | 6-577 |
| 6-5.32 | RF/IF Test Monitor UD4A31 Replacement Procedure. | 6-578 |
| 6-5.32.1 | Equipment and Tools Required | 6-578 |
| 6-5.32.2 | Initial Conditions/Preliminary Setup | 6-578 |
| 6-5.32.3 | Replacement Procedure | 6-578 |
| 6-5.33 | Receiver Interface UD4A32 Replacement Procedure. | 6-579 |
| 6-5.33.1 | Equipment and Tools Required | 6-579 |
| 6-5.33.2 | Initial Conditions/Preliminary Setup | 6-579 |
| 6-5.33.3 | Replacement Procedure | 6-580 |
| 6-5.34 | 6 dB Attenuator Pad UD4A33 Replacement Procedure. | 6-580 |
| 6-5.34.1 | Equipment and Tools Required | 6-580 |
| 6-5.34.2 | Initial Conditions/Preliminary Setup | 6-580 |
| 6-5.34.3 | Replacement Procedure | 6-581 |
| 6-5.35 | 10 dB Attenuator Pad UD4A34 Replacement Procedure. | 6-581 |
| 6-5.35.1 | Equipment and Tools Required | 6-581 |
| 6-5.35.2 | Initial Conditions/Preliminary Setup | 6-581 |
| 6-5.35.3 | Replacement Procedure | 6-582 |
| 6-5.36 | Fixed Attenuator UD4A36 Replacement Procedure. | 6-582 |
| 6-5.36.1 | Equipment and Tools Required | 6-582 |
| 6-5.36.2 | Initial Conditions/Preliminary Setup | 6-583 |
| 6-5.36.3 | Replacement Procedure | 6-583 |
| 6-5.37 | Receiver Cabinet Blowers UD4B1, UD4B2 Replacement Procedure. | 6-583 |
| 6-5.37.1 | Equipment and Tools Required | 6-583 |
| 6-5.37.2 | Initial Conditions/Preliminary Setup | 6-584 |
| 6-5.37.3 | Replacement Procedure | 6-584 |
| 6-5.38 | Plug-In Frequency Unit UD4A1A1 Replacement Procedure. | 6-585 |
| 6-5.38.1 | Equipment and Tools Required | 6-585 |
| 6-5.38.2 | Initial Conditions/Preliminary Setup | 6-585 |
| 6-5.38.3 | Replacement Procedure | 6-585 |
| 6-5.39 | 40 dB Directional Coupler UD4DC1 Replacement Procedure. | 6-585 |
| 6-5.39.1 | Equipment and Tools Required | 6-585 |
| 6-5.39.2 | Initial Conditions/Preliminary Setup | 6-586 |
| 6-5.39.3 | Replacement Procedure | 6-586 |
| 6-5.40 | 20 dB Directional Coupler UD4DC2 Replacement Procedure. | 6-587 |
| 6-5.40.1 | Equipment and Tools Required | 6-587 |
| 6-5.40.2 | Initial Conditions/Preliminary Setup | 6-587 |
| 6-5.40.3 | Replacement Procedure | 6-587 |
| 6-5.41 | DAU Controller Module UD5A3A1 and Analog Processor Module UD5A3A2 Replacement Procedure. | 6-588 |
| 6-5.41.1 | Equipment and Tools Required | 6-588 |
| 6-5.41.2 | Initial Conditions/Preliminary Setup | 6-588 |
| 6-5.41.3 | Replacement Procedure | 6-589 |
| 6-5.42 | DCU Analog Card UD5A6A1 Replacement Procedure. | 6-589 |

| Paragraph | Title | Page |
|---|---|---|
| 6-5.42.1 | Equipment and Tools Required | 6-590 |
| 6-5.42.2 | Initial Conditions/Preliminary Setup | 6-590 |
| 6-5.42.3 | Replacement Procedure | 6-590 |
| 6-5.43 | DCU Digital Card UD5A6A2 Replacement Procedure. | 6-591 |
| 6-5.43.1 | Equipment and Tools Required | 6-591 |
| 6-5.43.2 | Initial Conditions/Preliminary Setup | 6-592 |
| 6-5.43.3 | Replacement Procedure | 6-592 |
| 6-5.44 | DCU Power Supplies UD5A6PS1/PS2/PS3 Replacement Procedure. | 6-594 |
| 6-5.44.1 | Equipment and Tools Required | 6-594 |
| 6-5.44.2 | Initial Conditions/Preliminary Setup | 6-594 |
| 6-5.44.3 | Replacement Procedure | 6-594 |
| 6-5.45 | Pedestal/Power Amplifier Unit UD5A7 Replacement Procedure. | 6-596 |
| 6-5.45.1 | Equipment and Tools Required | 6-596 |
| 6-5.45.2 | Initial Conditions/Preliminary Setup | 6-596 |
| 6-5.45.3 | Replacement Procedure | 6-597 |
| 6-5.46 | Azimuth/Elevation Power Amp UD5A7A1 and UD5A7A2 Replacement Procedure. | 6-597 |
| 6-5.46.1 | Equipment and Tools Required | 6-597 |
| 6-5.46.2 | Initial Conditions/Preliminary Setup | 6-598 |
| 6-5.46.3 | Replacement Procedure | 6-598 |
| 6-5.47 | HV Bus Monitor UD5A7A3 Replacement Procedure. | 6-599 |
| 6-5.47.1 | Equipment and Tools Required | 6-599 |
| 6-5.47.2 | Initial Conditions/Preliminary Setup | 6-599 |
| 6-5.47.3 | Replacement Procedure | 6-599 |
| 6-5.48 | Transient Absorber UD5A7CR5 and UD5A7CR6 Replacement Procedure. | 6-600 |
| 6-5.48.1 | Equipment and Tools Required | 6-600 |
| 6-5.48.2 | Initial Conditions/Preliminary Setup | 6-600 |
| 6-5.48.3 | Replacement Procedure | 6-601 |
| 6-5.49 | Relay UD5A7K1 Replacement Procedure. | 6-601 |
| 6-5.49.1 | Equipment and Tools Required | 6-601 |
| 6-5.49.2 | Initial Conditions/Preliminary Setup | 6-602 |
| 6-5.49.3 | Replacement Procedure | 6-602 |
| 6-5.50 | Maintenance Panel Assembly UD5A2 Replacement Procedure. | 6-603 |
| 6-5.50.1 | Equipment and Tools Required | 6-603 |
| 6-5.50.2 | Initial Conditions/Preliminary Setup | 6-603 |
| 6-5.50.3 | Replacement Procedure | 6-603 |
| 6-5.51 | Communications LRU Replacement Information. | 6-604 |
| 6-5.52 | Antenna Pedestal UD2 LRU Replacement. | 6-604 |
| 6-5.52.1 | Elevation Manual Drive Assembly UD2A1A1A1 Replacement Procedure | 6-604 |
| 6-5.52.1.1 | Equipment and Tools Required | 6-604 |
| 6-5.52.1.2 | Initial Conditions/Preliminary Setup | 6-604 |

| Paragraph | Title | Page |
|---|---|---|
| 6-5.52.1.3 | Replacement Procedure | 6-605 |
| 6-5.52.2 | Elevation Manual Drive Stow Pin Switch UD2A1A1A1S1 Replacement Procedure | 6-608 |
| 6-5.52.2.1 | Equipment and Tools Required | 6-608 |
| 6-5.52.2.2 | Initial Conditions/Preliminary Setup | 6-608 |
| 6-5.52.2.3 | Replacement Procedure | 6-609 |
| 6-5.52.3 | Elevation Data Package UD2A1A1A2 and Elevation Encoder UD2A1A1A2A1 Replacement Procedure | 6-610 |
| 6-5.52.3.1 | Equipment and Tools Required | 6-610 |
| 6-5.52.3.2 | Initial Conditions/Preliminary Setup | 6-610 |
| 6-5.52.3.3 | Replacement Procedure | 6-61 1 |
| 6-5.52.4 | Elevation Gearbox UD2A1A1A3 Replacement Procedure | 6-61 1 |
| 6-5.52.4.1 | Equipment and Tools Required | 6-61 1 |
| 6-5.52.4.2 | Initial Conditions/Preliminary Setup | 6-613 |
| 6-5.52.4.3 | Replacement Procedure | 6-613 |
| 6-5.52.5 | Elevation Gearbox Drive Motor UD2A1A1B1 Replacement Procedure | 6-620 |
| 6-5.52.5.1 | Equipment and Tools Required | 6-620 |
| 6-5.52.5.2 | Initial Conditions/Preliminary Setup | 6-620 |
| 6-5.52.5.3 | Replacement Procedure | 6-621 |
| 6-5.52.6 | Elevation Stow Pin Switch UD2A1A1S3/S4 (LPP) or UD2A1A1A8S1/A9S1 (FSP) Replacement Procedure | 6-623 |
| 6-5.52.6.1 | Equipment and Tools Required | 6-623 |
| 6-5.52.6.2 | Initial Conditions/Preliminary Setup | 6-623 |
| 6-5.52.6.3 | Replacement Procedure | 6-624 |
| 6-5.52.7 | Azimuth Manual Drive Assembly UD2A1A3A1 Replacement Procedure | 6-628 |
| 6-5.52.7.1 | Equipment and Tools Required | 6-628 |
| 6-5.52.7.2 | Initial Conditions/Preliminary Setup | 6-628 |
| 6-5.52.7.3 | Replacement Procedure | 6-628 |
| 6-5.52.8 | Azimuth Manual Drive Stow Pin Safety Interlock Switch UD2A1A3A1S1 Replacement Procedure | 6-631 |
| 6-5.52.8.1 | Equipment and Tools Required | 6-631 |
| 6-5.52.8.2 | Initial Conditions/Preliminary Setup | 6-631 |
| 6-5.52.8.3 | Replacement Procedure | 6-631 |
| 6-5.52.9 | Azimuth Data Package UD2A1A3A2 and Azimuth Encoder UD2A1A3A2A1 Replacement Procedure | 6-632 |
| 6-5.52.9.1 | Equipment and Tools Required | 6-632 |
| 6-5.52.9.2 | Initial Conditions/Preliminary Setup | 6-633 |
| 6-5.52.9.3 | Replacement Procedure | 6-633 |
| 6-5.52.10 | Azimuth Gearbox UD2A1A3A3 Replacement Procedure | 6-633 |
| 6-5.52.10.1 | Equipment and Tools Required | 6-634 |
| 6-5.52.10.2 | Initial Conditions/Preliminary Setup | 6-635 |
| 6-5.52.10.3 | Replacement Procedure | 6-635 |
| 6-5.52.1 1 | Azimuth Gearbox Drive Motor UD2A1A3B1 Replacement Procedure | 6-645 |

| Paragraph | Title | Page |
|---|---|---|
| 6-5.52.1 1.1 | Equipment and Tools Required | 6-645 |
| 6-5.52.1 1.2 | Initial Conditions/Preliminary Setup | 6-645 |
| 6-5.52.1 1.3 | Replacement Procedure | 6-645 |
| 6-5.52.12 | Azimuth Stow Pin Switch UD2A1A3S2 (LPP) or UD2A1A3A8S1 (FSP) Replacement Procedure | 6-647 |
| 6-5.52.12.1 | Equipment and Tools Required | 6-647 |
| 6-5.52.12.2 | Initial Conditions/Preliminary Setup | 6-647 |
| 6-5.52.12.3 | Replacement Procedure | 6-647 |
| 6-5.52.13 | Receiver Protector UD2A3 and UD2A7 or UD2A3A2 and UD2A7A2 Replacement Procedure | 6-651 |
| 6-5.52.13.1 | Equipment and Tools Required | 6-651 |
| 6-5.52.13.2 | Initial Conditions/Preliminary Setup | 6-651 |
| 6-5.52.13.3 | Replacement Procedure | 6-651 |
| 6-5.52.14 | Low Noise Amplifier (LNA) UD2A4 and UD2A8 Replacement Procedure | 6-653 |
| 6-5.52.14.1 | Equipment and Tools Required | 6-653 |
| 6-5.52.14.2 | Initial Conditions/Preliminary Setup | 6-654 |
| 6-5.52.14.3 | Replacement Procedure | 6-654 |
| 6-5.52.15 | Main Bearing Oil Sensor UD2A1A3RT2 Replacement Procedure | 6-655 |
| 6-5.52.15.1 | Equipment and Tools Required | 6-655 |
| 6-5.52.15.2 | Initial Conditions/Preliminary Setup | 6-655 |
| 6-5.52.15.3 | Replacement Procedure | 6-656 |
| 6-5.52.16 | Azimuth Rotary Joint UD2A1A4 Replacement Procedure | 6-658 |
| 6-5.52.16.1 | Equipment and Tools Required | 6-658 |
| 6-5.52.16.2 | Initial Conditions/Preliminary Setup | 6-658 |
| 6-5.52.16.3 | Replacement Procedure | 6-659 |
| 6-5.52.17 | Slip Ring UD2A1A2 Replacement Procedure | 6-660 |
| 6-5.52.17.1 | Equipment and Tools Required | 6-660 |
| 6-5.52.17.2 | Initial Conditions/Preliminary Setup | 6-660 |
| 6-5.52.17.3 | Replacement Procedure | 6-661 |
| 6-5.52.18 | Circulator UD2A1WG05 Replacement Procedure | 6-664 |
| 6-5.52.18.1 | Equipment and Tools Required | 6-664 |
| 6-5.52.18.2 | Initial Conditions/Preliminary Setup | 6-664 |
| 6-5.52.18.3 | Replacement Procedure | 6-665 |
| 6-5.52.19 | Passive Diode Limiter 2A3A1/2A7A1 Replacement Procedure | 6-666 |
| 6-5.52.19.1 | Equipment and Tools Required | 6-666 |
| 6-5.52.19.2 | Initial Conditions/Preliminary Setup | 6-666 |
| 6-5.52.19.3 | Replacement Procedure | 6-667 |
| 6-5.52.20 | Bandpass Filter 2A1A3FL1 and 2A1A3FL2 Replacement Procedure. | 6-668 |
| 6-5.52.20.1 | Equipment and Tools Required. | 6-668 |
| 6-5.52.20.2 | Initial Conditions/Preliminary Setup. | 6-668 |
| 6-5.52.20.3 | Replacement Procedure. | 6-668 |
| 6-5.52.21 | Coax Cable 2W900 and 2W901 Replacement Procedure. | 6-670 |

| Paragraph | Title | Page |
|---|---|---|
| 6-5.52.21.1 | Equipment and Tools Required. | 6-670 |
| 6-5.52.21.2 | Initial Conditions/Preliminary Setup. | 6-670 |
| 6-5.52.21.3 | Replacement Procedure. | 6-670 |
| 6-5.52.22 | Antenna Power Monitor UD2A5 and UD2A9 Replacement Procedure | 6-672 |
| 6-5.52.22.1 | Equipment and Tools Required | 6-672 |
| 6-5.52.22.2 | Initial Conditions/Preliminary Setup | 6-672 |
| 6-5.52.22.3 | Replacement Procedure | 6-672 |
| 6-5.53 | Waveguide Components. | 6-677 |
| 6-5.53.1 | Equipment Shelter UD1 Waveguide Assembly LRUs (1WG1 through 1WG19, 1WG101 through 1WG107, and 1S1, 1S2, 1S101, 1DC1, and 1DC101) | 6-677 |
| 6-5.53.2 | Steel Tower UD11 Waveguide LRUs (WG1 through WG18) | 6-677 |
| 6-5.53.3 | Pedestal Waveguide LRUs (UD2xxxxxxx components). | 6-677 |
| 6-5.53.4 | Waveguide Component (1WG1 through 1WG19 and 1WG101 through 1WG107 Replacement | 6-677 |
| 6-5.53.4.1 | Equipment and Tools Required | 6-677 |
| 6-5.53.4.2 | Initial Conditions/Preliminary Setup | 6-678 |
| 6-5.53.4.3 | Replacement Procedure | 6-678 |
| 6-5.53.5 | Waveguide Switch (UD1S1, UD1S101, and UD1S2) Replacement | 6-679 |
| 6-5.53.5.1 | Equipment and Tools Required | 6-679 |
| 6-5.53.5.2 | Initial Conditions/Preliminary Setup | 6-679 |
| 6-5.53.5.3 | Replacement Procedure | 6-680 |
| 6-5.53.6 | Radiation Leakage Check | 6-680 |
| 6-5.53.6.1 | Equipment and Tools Required | 6-681 |
| 6-5.53.6.2 | Preliminary Operations/Safety Precautions | 6-681 |
| 6-5.53.6.3 | Procedure | 6-681 |
| 6-5.54 | Waveguide Pressurization Unit UD6/106 Replacement Procedure. | 6-688 |
| 6-5.54.1 | Equipment and Tools Required | 6-688 |
| 6-5.54.2 | Initial Conditions/Preliminary Setup | 6-688 |
| 6-5.54.3 | Replacement Procedure | 6-688 |
| 6-5.55 | Power Supplies UD4PS1, PS2, and PS4-PS9 Replacement Procedure. | 6-691 |
| 6-5.55.1 | Equipment and Tools Required | 6-691 |
| 6-5.55.2 | Initial Conditions/Preliminary Setup | 6-691 |
| 6-5.55.3 | Replacement Procedure | 6-691 |
| 6-5.56 | +28 VDC Power Supply UD5PS1 Replacement Procedure. | 6-692 |
| 6-5.56.1 | Equipment and Tools Required | 6-692 |
| 6-5.56.2 | Initial Conditions/Preliminary Setup | 6-692 |
| 6-5.56.3 | Replacement Procedure | 6-692 |
| 6-5.57 | ±15 VDC and +5 VDC Power Supplies UD5PS2/PS3 Replacement Procedure. | 6-693 |
| 6-5.57.1 | Equipment and Tools Required | 6-693 |
| 6-5.57.2 | Initial Conditions/Preliminary Setup | 6-693 |
| 6-5.57.3 | Replacement Procedure | 6-694 |

| Paragraph | Title | Page |
|---|---|---|
| 6-5.58 | +5 VDC Power Supply UD5PS4 Replacement Procedure. | 6-694 |
| 6-5.58.1 | Equipment and Tools Required | 6-694 |
| 6-5.58.2 | Initial Conditions/Preliminary Setup | 6-694 |
| 6-5.58.3 | Replacement Procedure | 6-695 |
| 6-5.59 | Swing-Out Power Subsystem UD5PS5 Replacement Procedures. | 6-695 |
| 6-5.59.1 | Equipment and Tools Required | 6-696 |
| 6-5.59.2 | Initial Conditions/Preliminary Setup | 6-696 |
| 6-5.59.3 | Power Subsystem Enclosure UD5PS5 Replacement Procedure | 6-696 |
| 6-5.59.4 | AC Power Module UD5PS5A1 Replacement Procedure | 6-699 |
| 6-5.59.5 | AC Module 12 Volt Rechargeable Battery UD5PS5A1BT1 Replacement Procedure. | 6-701 |
| 6-5.59.6 | DC Power Supply UD5PS5A2 Replacement Procedure | 6-701 |
| 6-5.59.7 | CDS Master Module UD5PS5A3 Replacement Procedure | 6-703 |
| 6-5.59.8 | DC Power Supply Fan Tray UD5PS5A4/Individual Fan UD5PS5A4B1/B2 Replacement Procedure | 6-707 |
| 6-5.60 | Temperature Sense Module UD5A12A3 Replacement Procedure. | 6-708 |
| 6-5.60.1 | Equipment and Tools Required | 6-708 |
| 6-5.60.2 | Initial Conditions/Preliminary Setup | 6-708 |
| 6-5.60.3 | Replacement Procedure | 6-708 |
| 6-5.61 | CDS Patch Panel UD5A15 Replacement Procedure. | 6-71 1 |
| 6-5.61.1 | Equipment and Tools Required | 6-71 1 |
| 6-5.61.2 | Initial Conditions/Preliminary Setup | 6-71 1 |
| 6-5.61.3 | Replacement Procedure | 6-71 1 |
| 6-5.62 | Signal Processor Blower Assembly UD5A11 Replacement Procedure. | 6-713 |
| 6-5.62.1 | Equipment and Tools Required | 6-713 |
| 6-5.62.2 | Initial Conditions/Preliminary Setup | 6-713 |
| 6-5.62.3 | Replacement Procedure | 6-714 |
| 6-5.63 | A/B Switch and Dual A/B Switches UD5A17 Replacement Procedure. | 6-714 |
| 6-5.63.1 | Equipment and Tools Required | 6-714 |
| 6-5.63.2 | Initial Conditions/Preliminary Setup | 6-714 |
| 6-5.63.3 | Replacement Procedure | 6-715 |
| 6-5.64 | Channel Service Unit (CSU) UD5A18 Replacement Procedure. | 6-715 |
| 6-5.64.1 | Equipment and Tools Required | 6-715 |
| 6-5.64.2 | Initial Conditions/Preliminary Setup | 6-715 |
| 6-5.64.3 | Replacement Procedure | 6-716 |
| 6-5.65 | SCSI Fan Assembly UD5A8 Replacement Procedure. | 6-716 |
| 6-5.65.1 | Equipment and Tools Required | 6-717 |
| 6-5.65.2 | Initial Conditions/Preliminary Setup | 6-717 |
| 6-5.65.3 | Replacement Procedure | 6-717 |
| 6-5.66 | Small Computer System Interface (SCSI) Replacement. | 6-718 |
| 6-5.66.1 | SCSI Device Setup and Strapping | 6-719 |
| 6-5.66.2 | SCSI Device Termination | 6-719 |
| 6-5.66.3 | SCSI Enclosure Assembly UD5A5A4 Replacement Procedure | 6-720 |

| Paragraph | Title | Page |
|---|---|---|
| 6-5.66.3.1 | Equipment and Tools Required | 6-720 |
| 6-5.66.3.2 | Initial Conditions/Preliminary Setup | 6-720 |
| 6-5.66.3.3 | Replacement Procedure | 6-725 |
| 6-5.66.4 | SCSI Tape Drive UD5A5A1 Replacement Procedure | 6-726 |
| 6-5.66.4.1 | Equipment and Tools Required | 6-726 |
| 6-5.66.4.2 | Initial Conditions/Preliminary Setup | 6-726 |
| 6-5.66.4.3 | Replacement Procedure | 6-726 |
| 6-5.66.5 | SCSI Disk Drive UD5A5A2 Replacement Procedure | 6-727 |
| 6-5.66.5.1 | Equipment and Tools Required | 6-728 |
| 6-5.66.5.2 | Initial Conditions/Preliminary Setup | 6-728 |
| 6-5.66.5.3 | Replacement Procedure | 6-728 |
| 6-5.66.6 | SCSI Power Supply UD5A5PS1 Replacement | 6-729 |
| 6-5.66.6.1 | Equipment and Tools Required | 6-729 |
| 6-5.66.6.2 | Initial Conditions/Preliminary Setup | 6-730 |
| 6-5.66.6.3 | Replacement Procedure | 6-730 |
| 6-5.67 | RDADP Cabinet Power Distribution Panel UD5A14 Replacement Procedure. | 6-731 |
| 6-5.67.1 | Equipment and Tools Required | 6-731 |
| 6-5.67.2 | Initial Conditions/Preliminary Setup | 6-731 |
| 6-5.67.3 | Replacement Procedure | 6-732 |
| 6-5.68 | RDA Maintenance Terminal UD5A4 (CDT-100) Replacement Procedure. | 6-732 |
| 6-5.68.1 | Equipment and Tools Required | 6-732 |
| 6-5.68.2 | Initial Conditions/Preliminary Setup | 6-732 |
| 6-5.68.3 | Replacement Procedure | 6-733 |
| 6-5.68.4 | Terminal Setup Configuration Procedure | 6-733 |
| 6-5.69 | Pedestal Slip Ring Brush Block Assembly UD2A1A2A1, A2, and A3 Replacement Procedure. | 6-736 |
| 6-5.69.1 | Equipment and Tools Required | 6-736 |
| 6-5.69.2 | Initial Conditions/Preliminary Setup | 6-736 |
| 6-5.69.3 | Replacement Procedure | 6-737 |
| 6-5.70 | Bi-Directional Crossguide Coupler UD1DC1 Replacement Procedure. | 6-739 |
| 6-5.70.1 | Equipment and Tools Required | 6-739 |
| 6-5.70.2 | Initial Conditions/Preliminary Setup. | 6-739 |
| 6-5.70.3 | Replacement Procedure | 6-739 |
| 6-5.71 | Spectrum Filter UD1WG6/WG106 Replacement Procedure. | 6-740 |
| 6-5.71.1 | Equipment and Tools Required | 6-741 |
| 6-5.71.2 | Initial Conditions/Preliminary Setup | 6-741 |
| 6-5.71.3 | Replacement Procedure | 6-741 |
| 6-5.72 | VME Chassis UD5A1A4 Replacement Procedure. | 6-742 |
| 6-5.72.1 | Equipment and Tools Required | 6-742 |
| 6-5.72.2 | Initial Conditions/Preliminary Setup | 6-742 |
| 6-5.72.3 | Replacement Procedure | 6-743 |

| Paragraph | Title | Page |
|---|---|---|
| 6-5.73 | VME Wideband Board UD5A1A2/A3 Replacement Procedure. | 6-743 |
| 6-5.73.1 | Equipment and Tools Required | 6-743 |
| 6-5.73.2 | Initial Conditions/Preliminary Setup | 6-744 |
| 6-5.73.3 | Replacement Procedure | 6-744 |
| 6-5.74 | VME VCI-V Board UD5A1A1 Replacement Procedure. | 6-744 |
| 6-5.74.1 | Equipment and Tools Required | 6-744 |
| 6-5.74.2 | Initial Conditions/Preliminary Setup | 6-744 |
| 6-5.74.3 | Replacement Procedure | 6-745 |
| 6-5.75 | VME Chassis Power Supply UD5A1PS1 Replacement Procedure. | 6-748 |
| 6-5.75.1 | Equipment and Tools Required | 6-748 |
| 6-5.75.2 | Initial Conditions/Preliminary Setup | 6-748 |
| 6-5.75.3 | Replacement Procedure | 6-748 |
| 6-5.76 | AC Fan Tray Assembly UD5A13 or Fans UD5A13A1B1 thru B4 Replacement Procedure. | 6-749 |
| 6-5.76.1 | Equipment and Tools Required | 6-749 |
| 6-5.76.2 | Initial Conditions/Preliminary Setup | 6-749 |
| 6-5.76.3 | Replacement Procedure | 6-749 |
| 6-5.77 | AC Fan Tray Sensor Board UD5A13A1A1 Replacement Procedure. | 6-751 |
| 6-5.77.1 | Equipment and Tools Required | 6-751 |
| 6-5.77.2 | Initial Conditions/Preliminary Setup | 6-751 |
| 6-5.77.3 | Replacement Procedure | 6-751 |
| 6-5.78 | STATMUX UD105A20 Replacement Procedure. | 6-754 |
| 6-5.78.1 | Equipment and Tools Required | 6-754 |
| 6-5.78.2 | Initial Conditions/Preliminary Setup | 6-754 |
| 6-5.78.3 | Replacement Procedure | 6-754 |
| 6-5.79 | Dial Modem (Standalone) UD105A21 Replacement Procedure. | 6-755 |
| 6-5.79.1 | Equipment and Tools Required | 6-755 |
| 6-5.79.2 | Initial Conditions/Preliminary Setup | 6-755 |
| 6-5.79.3 | Replacement Procedure | 6-755 |
| 6-5.80 | Relay Assembly UD5/105A24 Replacement Procedure. | 6-756 |
| 6-5.80.1 | Equipment and Tools Required | 6-756 |
| 6-5.80.2 | Initial Conditions/Preliminary Setup | 6-756 |
| 6-5.80.3 | Replacement Procedure | 6-756 |
| 6-5.81 | Automatic Wideband Communication Switch UD5A19 Replacement Procedure. | 6-756 |
| 6-5.81.1 | Equipment and Tools Required | 6-757 |
| 6-5.81.2 | Initial Conditions/Preliminary Setup | 6-757 |
| 6-5.81.3 | Replacement Procedure | 6-757 |
| Section 6-6. | Alignment and Adjustment Procedures | 6-764 |
| 6-6.1 | General. | 6-764 |
| 6-6.2 | Setup Restoration Procedures. | 6-764 |

| Paragraph | Title | Page |
|---|---|---|
| 6-6.3 | Azimuth/Elevation Encoder Alignment Description. | 6-764 |
| 6-6.4 | Elevation Pre-Limit and Final Limit Switch Adjustment Description. | 6-764 |
| 6-6.5 | Clogged Filter Indicator (CFI) Description. | 6-765 |
| 6-6.6 | Receiver Power Supplies Adjustment Description. | 6-766 |
| 6-6.7 | RDA Data Processor Power Supply Adjustments Description. | 6-766 |
| 6-6.8 | HP436A Power Meter Calibration. | 6-767 |
| 6-6.9 | RF Frequency Generator Checkout Description. | 6-767 |
| 6-6.10 | Receiver Channel Alignment Description. | 6-767 |
| 6-6.10.1 | IF Amplifier/Limiter Noise Reference Level Adjustment | 6-767 |
| 6-6.10.2 | I/Q Phase Detector Gain and DC Offset Adjustment | 6-767 |
| 6-6.10.3 | AGC Controller Threshold Adjustment | 6-767 |
| 6-6.10.4 | AGC Clocks 1 and 2 Alignment | 6-768 |
| 6-6.1 1 | Interference Suppression Unit (ISU) Alignment Description. | 6-768 |
| 6-6.1 1.1 | Guard Band Gain Match | 6-768 |
| 6-6.1 1.2 | Interference Detector Threshold Adjustment | 6-768 |
| 6-6.12 | RF/IF Test Monitor Alignment Description. | 6-768 |
| 6-6.13 | Receiver/Signal Processor Calibration Description. | 6-769 |
| 6-6.13.1 | CW Test Signal Injection Calibration | 6-769 |
| 6-6.13.2 | System Noise Calibration | 6-770 |
| 6-6.13.3 | RF Power Sensor Calibration and High Power Pulse Width Measurement | 6-770 |
| 6-6.14 | RDA Power Monitor Bias Adjustment Description. | 6-770 |
| 6-6.15 | RDA Maintenance Procedures Initial Setup. | 6-771 |
| 6-6.15.1 | Equipment and Tools Required | 6-771 |
| 6-6.15.2 | Initial Conditions/Preliminary Setup | 6-771 |
| 6-6.15.3 | Initial Setup Procedures | 6-771 |
| 6-6.16 | RDA Restoration. | 6-786 |
| 6-6.16.1 | Equipment and Tools Required | 6-786 |
| 6-6.16.2 | Initial Conditions/Preliminary Setup | 6-786 |
| 6-6.16.3 | RDA Restoration Procedure | 6-786 |
| 6-6.17 | Azimuth/Elevation Encoder Alignment. | 6-789 |
| 6-6.17.1 | Equipment and Tools Required | 6-789 |
| 6-6.17.2 | Initial Conditions/Preliminary Setup | 6-789 |
| 6-6.17.3 | Azimuth/Elevation Encoder Alignment Procedure | 6-790 |
| 6-6.18 | Elevation Pre-Limit and Final Limit Switch Adjustment. | 6-792 |
| 6-6.18.1 | Equipment and Tools Required | 6-792 |
| 6-6.18.2 | Initial Conditions/Preliminary Setup | 6-793 |
| 6-6.18.3 | Elevation Pre-limit and Final Limit Switch Adjustment (Alignment) Procedures | 6-793 |
| 6-6.19 | Clogged Filter Indicator Alignment. | 6-801 |
| 6-6.19.1 | Equipment and Tools Required | 6-801 |
| 6-6.19.2 | Initial Conditions/Preliminary Setup | 6-801 |
| 6-6.19.3 | Clogged Filter Alignment Procedure | 6-801 |

| Paragraph | Title | Page |
|---|---|---|
| 6-6.20 | Receiver UD4 Power Supplies Adjustment. | 6-81 1 |
| 6-6.20.1 | Equipment and Tools Required | 6-81 1 |
| 6-6.20.2 | Initial Conditions/Preliminary Setup | 6-81 1 |
| 6-6.20.3 | Receiver UD4 Power Supplies Adjustment Procedure | 6-81 1 |
| 6-6.21 | RDA Data Processor UD5 Power Supplies Adjustment. | 6-818 |
| 6-6.21.1 | Equipment and Tools Required | 6-818 |
| 6-6.21.2 | Initial Conditions/Preliminary Setup | 6-818 |
| 6-6.21.3 | RDA Data Processor UD5 Power Supplies Adjustment Procedure | 6-818 |
| 6-6.22 | HP436A Power Meter Calibration. | 6-820 |
| 6-6.22.1 | Equipment and Tools Required | 6-820 |
| 6-6.22.2 | Initial Conditions/Preliminary Setup | 6-820 |
| 6-6.22.3 | HP436A Power Meter Calibration Procedure - Part 1 | 6-820 |
| 6-6.22.4 | HP436A Power Meter Calibration Procedure - Part 2 | 6-821 |
| 6-6.23 | RF Frequency Generator Checkout | 6-823 |
| 6-6.23.1 | Equipment and Tools Required | 6-823 |
| 6-6.23.2 | Initial Conditions/Preliminary Setup | 6-824 |
| 6-6.23.3 | RF Frequency Generator Checkout Procedure | 6-825 |
| 6-6.24 | Receiver Channel Alignment. | 6-830 |
| 6-6.24.1 | Initial IF Amplifier/Limiter Gain Adjustment | 6-830 |
| 6-6.24.1.1 | Equipment and Tools Required | 6-830 |
| 6-6.24.1.2 | Initial Conditions/Preliminary Setup | 6-830 |
| 6-6.24.1.3 | Alignment Procedure | 6-831 |
| 6-6.24.2 | I/Q Phase Detector Gain Adjustment | 6-832 |
| 6-6.24.2.1 | Equipment and Tools Required | 6-832 |
| 6-6.24.2.2 | Initial Conditions/Preliminary Setup | 6-832 |
| 6-6.24.2.3 | Adjustment Procedure | 6-833 |
| 6-6.24.3 | I/Q Phase Detector DC Offset Adjustment | 6-837 |
| 6-6.24.3.1 | Equipment and Tools Required | 6-837 |
| 6-6.24.3.2 | Initial Conditions/Preliminary Setup | 6-837 |
| 6-6.24.3.3 | Adjustment Procedure | 6-837 |
| 6-6.24.4 | AGC Threshold Voltage Adjustment | 6-837 |
| 6-6.24.4.1 | Equipment and Tools Required | 6-837 |
| 6-6.24.4.2 | Initial Conditions/Preliminary Setup | 6-838 |
| 6-6.24.4.3 | Adjustment Procedure | 6-838 |
| 6-6.24.5 | Equipment Restoration | 6-840 |
| 6-6.24.6 | Final Adjustment of IF Amplifier/Limiter Gain. | 6-842 |
| 6-6.24.6.1 | Equipment and Tools Required. | 6-842 |
| 6-6.24.6.2 | Initial Conditions/Preliminary Setup. | 6-842 |
| 6-6.24.6.3 | Adjustment Procedure | 6-842 |
| 6-6.24.7 | AGC Clocks 1 and 2 Alignment | 6-842 |
| 6-6.24.7.1 | Equipment and Tools Required | 6-843 |
| 6-6.24.7.2 | Initial Conditions/Preliminary Setup | 6-843 |

| Paragraph | Title | Page |
|---|---|---|
| 6–6.24.7.3 | Adjustment Procedure – AGC Clock 2 to Track and Hold Delay | 6–843 |
| 6–6.24.7.4 | Alignment Procedure – AGC Clock 1 to AGC Clock 2 Delay | 6–845 |
| 6–6.25 | Interference Suppression Unit Alignment. | 6–847 |
| 6–6.25.1 | Equipment and Tools Required | 6–847 |
| 6–6.25.2 | Initial Conditions/Preliminary Setup | 6–847 |
| 6–6.25.3 | Guard Band IF Amplifier Alignment | 6–848 |
| 6–6.25.4 | Set Interference Detector Thresholds | 6–849 |
| 6–6.26 | RF/IF Test Monitor Alignment. | 6–850 |
| 6–6.26.1 | Equipment and Tools Required | 6–850 |
| 6–6.26.2 | Initial Conditions/Preliminary Setup | 6–850 |
| 6–6.26.3 | RF/IF Test Monitor Alignment Procedure | 6–850 |
| 6–6.27 | RDA Power Monitor Bias Adjustment. | 6–853 |
| 6–6.27.1 | Equipment and Tools Required | 6–853 |
| 6–6.27.2 | Initial Conditions/Preliminary Setup | 6–853 |
| 6–6.27.3 | RDA Power Monitor Bias Adjustment Procedure | 6–853 |
| 6–6.28 | Receiver/Signal Processor Calibration. | 6–858 |
| 6–6.28.1 | Part 1 — Performance Data | 6–871 |
| 6–6.28.1.1 | Reflectivity Calibration | 6–871 |
| 6–6.28.1.2 | Reflectivity Calibration Check | 6–872 |
| 6–6.28.1.3 | Power Monitor Consistency Check | 6–872 |
| 6–6.28.1.4 | Reflectivity Error Estimate | 6–884 |
| 6–6.28.1.5 | Suncheck Measurements | 6–894 |
| 6–6.28.1.6 | Data Recording | 6–900 |
| 6–6.28.2 | Part 2 – Off–line Calibration Checks | 6–902 |
| 6–6.28.2.1 | Reflectivity Error Check | 6–902 |
| 6–6.28.2.2 | Minimum Discernible Signal | 6–923 |
| 6–6.28.2.3 | Correction of System Noise Temperature (R35) | 6–930 |
| 6–6.28.2.4 | DELETED | 6–930 |
| 6–6.28.2.5 | CW Substitution Reflectivity Accuracy Verification through MSCF and RPG | 6–939 |
| 6–6.28.3 | Off–Line Calibration Procedures | 6–952 |
| 6–6.28.3.1 | CW Test Path Calibration | 6–952 |
| 6–6.28.3.2 | RF Drive Path Calibration | 6–962 |
| 6–6.28.3.3 | Calibration of the Noise Path and Noise Source 4A25 | 6–966 |
| 6–6.28.3.4 | Calibration of the RF Test Attenuator 4A23 | 6–982 |
| 6–6.28.3.5 | Delayed Klystron Path Calibration | 6–984 |
| 6–6.28.3.6 | Solar Calibration. | 6–996 |
| 6–6.29 | Receiver Adaptation Data Entry and Display. | 6–999 |
| 6–6.29.1 | Equipment and Tools Required | 6–999 |
| 6–6.29.2 | Initial Conditions/Preliminary Setup | 6–999 |
| 6–6.29.3 | Adaptation Data Retrieval Procedure | 6–1000 |
| 6–6.30 | Digital Control Unit (DCU) UD5A6 Azimuth and Elevation D/A Converter/Tach Adjustments. | 6–1002 |

| Paragraph | Title | Page |
|---|---|---|
| 6–6.30.1 | Equipment and Tools Required | 6–1002 |
| 6–6.30.2 | Initial Conditions/Preliminary Setup | 6–1002 |
| 6–6.30.3 | DCU UD5A6A1 D/A Converter Adjustments | 6–1003 |
| 6–6.30.3.1 | Azimuth D/A Converter Adjustment | 6–1003 |
| 6–6.30.3.2 | Elevation D/A Converter Adjustment | 6–1006 |
| 6–6.30.4 | DCU UD5A6A1 Tachometer Adjustments | 6–1013 |
| 6–6.30.4.1 | AZ Tachometer Adjustment | 6–1013 |
| 6–6.30.4.2 | EL Tachometer Adjustment | 6–1015 |
| 6–6.31 | Path Loss Measurements and Values Determined by Alignment. | 6–1016 |
| 6–6.31.1 | Equipment and Tools Required | 6–1017 |
| 6–6.31.2 | Path Loss Measurement | 6–1018 |
| 6–6.31.2.1 | Procedure | 6–1018 |
| 6–6.31.2.2 | Example | 6–1019 |
| 6–6.31.3 | RIOS Path Loss Measurement | 6–1021 |
| 6–6.31.3.1 | Procedure | 6–1021 |
| 6–6.31.3.2 | Example | 6–1022 |
| 6–6.31.4 | Alignment Procedures | 6–1024 |
| 6–6.32 | Waveguide Path Loss Measurements. | 6–1032 |
| 6–6.32.1 | Equipment and Tools Required. | 6–1032 |
| 6–6.32.2 | Initial Conditions/Preliminary Setup. | 6–1033 |
| 6–6.32.3 | Measurement/Determination of TR21 | 6–1033 |
| 6–6.32.3.1 | Applicable Waveguide Pieces. | 6–1033 |
| 6–6.32.3.2 | Total Path Loss Measurement. | 6–1034 |
| 6–6.32.3.3 | Calculation of TR21. | 6–1035 |
| 6–6.32.4 | Measurement/Determination of TR25 | 6–1036 |
| 6–6.32.4.1 | Applicable Waveguide Pieces. | 6–1036 |
| 6–6.32.4.2 | Total Path Loss Measurement. | 6–1037 |
| 6–6.32.4.3 | Calculation of TR25. | 6–1038 |
| 6–6.32.5 | Measurement/Determination of TR27, TR30, and TR33 | 6–1038 |
| 6–6.32.5.1 | Applicable Waveguide Pieces. | 6–1038 |
| 6–6.32.5.2 | Input Power Reference. | 6–1039 |
| 6–6.32.5.3 | Output Power Measurements. | 6–1040 |
| 6–6.32.5.4 | Calculation of TR27. | 6–1041 |
| 6–6.32.5.5 | Calculation of TR30. | 6–1041 |
| 6–6.32.5.6 | Calculation of TR33. | 6–1041 |
| 6–6.32.5.7 | Examples of TR27, TR30, and TR33 Calculation. | 6–1042 |
| 6–6.33 | Receiver Interface Output Selector (RIOS) Functionality in RDASOT. | 6–1042 |
| 6–6.33.1 | Equipment and Tools Required | 6–1043 |
| 6–6.33.2 | Example | 6–1043 |
| 6–6.34 | STATMUX UD105A20 (Penril VCX–150) Setup Procedure. | 6–1045 |
| 6–6.34.1 | Equipment and Tools Required | 6–1045 |
| 6–6.34.2 | Initial Conditions/Preliminary Setup | 6–1045 |

| Paragraph | Title | Page |
|---|---|---|
| 6-6.34.3 | STATMUX Setup Procedure | 6-1045 |
| 6-6.35 | Standalone Dial Port Modem (CODEX 3261) UD105A21 Setup Procedure. | 6-1056 |
| 6-6.35.1 | Equipment and Tools Required | 6-1056 |
| 6-6.35.2 | Initial Conditions/Preliminary Setup | 6-1056 |
| 6-6.35.3 | Procedure | 6-1056 |
| 6-6.35.3.1 | Modem Password Entry (unlocking) Procedure | 6-1056 |
| 6-6.35.3.2 | Setup Procedure | 6-1057 |
| 6-6.35.3.3 | Modem Password Entry (locking) Procedure | 6-1061 |
| 6-6.35.3.4 | Menu Listing | 6-1061 |
| **CHAPTER 7** | **REFERENCE DATA** | **7-1** |
| Section 7-1. | Introduction | 7-1 |
| 7-1.1 | General. | 7-1 |
| 7-1.2 | Chapter Organization. | 7-1 |
| 7-1.3 | System Interface Diagrams and Interconnection Cabling Diagrams. | 7-1 |
| Section 7-2. | Cable Wiring Data | 7-3 |
| 7-2.1 | General. | 7-3 |
| Section 7-3. | Power Distribution Diagrams (PDDs) | 7-345 |
| 7-3.1 | General. | 7-345 |
| | INDEX | Index 1 |
| | GLOSSARY | Glossary 1 |

# LIST OF ILLUSTRATIONS


| Figure | Title | Page |
|---|---|---|
| Figure SS-1. | Radiation Hazard Zones | lxiv |
| Figure 1-1. | Radar Data Acquisition Group | 1-4 |
| Figure 1-2. | Wideband Communications Group | 1-5 |
| Figure 1-3. | Single Channel RDA Electrical Equipment Shelter UD1 Configuration (2 Sheets) | 1-16 |
| Figure 1-4. | FAA Redundant RDA Electrical Equipment Shelter UD1 Configuration | 1-17 |
| Figure 1-5. | NWS Redundant RDA Electrical Equipment Shelter UD1 Configuration | 1-18 |
| Figure 1-6. | Antenna/Pedestal UD2 | 1-19 |
| Figure 1-7. | Radar Transmitter UD3 (2 Sheets) | 1-22 |
| Figure 1-8. | Radar Receiver UD4 | 1-24 |
| Figure 1-9. | RDA Data Processor Cabinet UD5 Front View (2 Sheets) | 1-25 |
| Figure 1-10. | Waveguide Pressurization Unit UD6 | 1-31 |
| Figure 1-11. | Generator Shelter Layout | 1-32 |
| Figure 1-12. | Steel Tower UD11 | 1-33 |
| Figure 1-13. | Radome UD12 (2 Sheets) | 1-34 |
| Figure 1-14. | Transition Power Maintenance Shelter Layout (3 Sheets) | 1-36 |
| Figure 4-1. | Receiver UD4, Front View | 4-35 |
| Figure 4-2. | RDA Data Processor UD5, Front View | 4-37 |
| Figure 4-3. | RDA Data Processor UD5, Rear View | 4-38 |
| Figure 4-4. | RDA Maintenance Panel UD5/105A2, Controls and Indicators | 4-39 |
| Figure 4-5. | Swing-Out Power Subsystem (SOPS) UD5PS5, Controls and Indicators | 4-41 |
| Figure 4-6. | CDS Master Module UD5PS5A3, Controls and Indicators | 4-43 |
| Figure 4-7. | RDA Maintenance Terminal UD5A4, Controls and Indicators | 4-45 |
| Figure 4-8. | Pedestal Power Amplifier Unit UD5A7, Controls and Indicators | 4-47 |
| Figure 4-9. | SCSI Assembly UD5A5, Controls and Indicators | 4-48 |
| Figure 4-10. | VME Assembly UD5A1, Controls and Indicators | 4-49 |
| Figure 4-11. | VME Wideband Board UD5A1A2/A3, Controls and Indicators | 4-51 |
| Figure 4-12. | VMEbus to Concurrent I/O Bus Interface Board (VCI-V) UD5A1A1, Controls and Indicators | 4-53 |
| Figure 4-13. | VMEbus to Concurrent I/O Bus Interface Board (VCI-C) UD5A12A18, Controls and Indicators | 4-55 |
| Figure 4-14. | RDA Power Supplies PS2 and PS3, Controls and Indicators | 4-57 |
| Figure 4-15. | AC Power Distribution Panel UD5A14, Controls and Indicators | 4-58 |
| Figure 4-16. | CSU UD5A18, Controls and Indicators (2 Sheets) | 4-60 |
| Figure 4-17. | Automatic A/B Wideband Communication Switch UD5A19, Controls and Indicators | 4-64 |
| Figure 4-18. | STATMUX UD105A20, Controls and Indicators | 4-66 |
| Figure 4-19. | Dial Port Modem UD105A21 (Standalone), Controls and Indicators | 4-68 |
| Figure 4-20. | A/B Switch UD5A17, Controls and Indicators | 4-70 |
| Figure 4-21. | Dual A/B Switch UD5A17, Controls and Indicators | 4-73 |

| Figure | Title | Page |
|---|---|---|
| Figure 4–22. | Screen Format | 4–170 |
| Figure 4–23. | Archive II Volume Scan File | 4–179 |
| Figure 4–24. | Example where Filemarks = 7 | 4–233 |
| Figure 4–25. | VCI–C Diagnostic Test Options | 4–238 |
| Figure 4–26. | Example where Filemarks = 7 | 4–243 |
| Figure 5–1. | Log Amplifier Detector Function | 5–40 |
| Figure 5–2. | AGC Effect on Varying Inputs | 5–42 |
| Figure 5–3. | Instantaneous AGC Timing–Point Target | 5–43 |
| Figure 5–4. | I/Q Phase Detector Output | 5–63 |
| Figure 5–5. | PSD/Notch Filter Waveform | 5–75 |
| Figure 5–6. | Bypass Filter Map Example | 5–77 |
| Figure 5–7. | Example Clutter Notch Width Map Types | 5–81 |
| Figure 5–8. | Fifth Order Filter Algorithm | 5–84 |
| Figure 5–9. | Contiguous Waveforms Timing Signals | 5–92 |
| Figure 5–10. | Batch Waveform Timing Signals | 5–93 |
| Figure 5–11. | Transmitter Trigger Diagram | 5–95 |
| Figure 5–12. | Signal Processor Block Diagram | 5–103 |
| Figure 5–13. | Basic Timing Diagram | 5–110 |
| Figure 5–14. | Expanded Timing Diagram | 5–113 |
| Figure 5–15. | Elevation Layer Startup | 5–114 |
| Figure 5–16. | Elevation Layer Stop | 5–115 |
| Figure 5–17. | ALUs Internal Logic | 5–127 |
| Figure 5–18. | Destination File Structure | 5–136 |
| Figure 5–19. | Source File Structure | 5–137 |
| Figure 5–20. | Status Memory Structure | 5–139 |
| Figure 5–21. | Central Processing Unit | 5–151 |
| Figure 5–22. | VCI–C Board Block Diagram | 5–166 |
| Figure 5–23. | VCI–V Board Block Diagram | 5–169 |
| Figure 5–24. | Wideband Board Detailed Block Diagram | 5–172 |
| Figure 5–25. | HDLC Frame Structure | 5–173 |
| Figure 5–26. | RDA Interprocessor Message Format | 5–193 |
| Figure 5–27. | Azimuth and Elevation Axis Servo Loop Configuration | 5–210 |
| Figure 5–28. | Functional Representation of Processing Performed in RDASC Processor | 5–217 |
| Figure 5–29. | AC Power Module Block Diagram | 5–236 |
| Figure FO5–1. | RDA Group Block Diagram (2 Sheets) | FP–5–261 |
| Figure FO5–2. | Redundant RDA Group Block Diagram (3 Sheets) | FP–5–265 |
| Figure FO5–3. | Transmitter Functional Block Diagram (6 Sheets) | FP–5–271 |
| Figure FO5–4. | Receiver Functional Block Diagram (2 Sheets) | FP–5–283 |
| Figure FO5–5. | Receiver Channel, Functional Flow Diagram (7 Sheets) | FP–5–287 |
| Figure FO5–6. | Master Signal Generation, Functional Flow Diagram | FP–5–301 |
| Figure FO5–7. | Interference Detection, Functional Flow Diagram (2 Sheets) | FP–5–303 |
| Figure FO5–8. | RF Test Signal Generation Functional Flow Diagram (3 Sheets) | FP–5–307 |

| Figure | Title | Page |
|---|---|---|
| Figure FO5–9. | RF Test Signal Processing, Functional Flow Diagram (4 Sheets) | FP–5–313 |
| Figure FO5–10. | HSP (Video Prescaling), Functional Block Diagram (8 Sheets) | FP–5–321 |
| Figure FO5–11. | PSP (Overview) Block Diagram (21 Sheets) | FP–5–337 |
| Figure FO5–12. | RDA Status and Control Processor, Functional Block Diagram (2 Sheets) | FP–5–379 |
| Figure FO5–13. | RDA Status and Control Interface, Functional Block Diagram | FP–5–383 |
| Figure FO5–14. | RDASC/DAU Command Data Interface, Functional Flow Diagram (3 Sheets) | FP–5–385 |
| Figure FO5–15. | Redundant RDASC/DAU Command Data Interface Functional Description (6 Sheets) | FP–5–391 |
| Figure FO5–16. | DAU/RDASC Status Data Interface, Functional Flow Diagram (2 Sheets) | FP–5–403 |
| Figure FO5–17. | Discrete Status Data Monitoring Functional Flow Diagram (ONAN) (2 Sheets) | FP–5–407 |
| Figure FO5–18. | Discrete Status Data Monitoring Functional Flow Diagram (Kohler) (2 Sheets) | FP–5–411 |
| Figure FO5–19. | Redundant Discrete Status Data Monitoring Functional Flow Diagram (2 Sheets) | FP–5–415 |
| Figure FO5–20. | Analog Status Data Monitoring Functional Flow Diagram (3 Sheets) | FP–5–419 |
| Figure FO5–21. | Redundant Analog Status Data Monitoring Functional Flow Diagram (4 Sheets) | FP–5–425 |
| Figure FO5–22. | Microwave Distribution Flow Diagram (2 Sheets) | FP–5–433 |
| Figure FO5–23. | Redundant Microwave Distribution Flow Diagram (2 Sheets) | FP–5–437 |
| Figure FO5–24. | Antenna Positioning Electronics, Functional Block Diagram | FP–5–441 |
| Figure FO5–25. | Servo Microprocessor Control Circuitry, Functional Flow Diagram | FP–5–443 |
| Figure FO5–26. | RDA Servo Interface, Functional Flow Diagram (2 Sheets) | FP–5–445 |
| Figure FO5–27. | Servo Loop Electronics, Functional Flow Diagram (6 Sheets) | FP–5–449 |
| Figure FO5–28. | Antenna Position Data Interface, Functional Flow Diagram (2 Sheets) | FP–5–461 |
| Figure FO5–29. | Servo Fault Monitoring, Functional Flow Diagram (4 Sheets) | FP–5–465 |
| Figure FO5–30. | Antenna, Functional Block Diagram | FP–5–473 |
| Figure FO5–31. | Redundant Configuration Interprocessor Link | FP–5–475 |
| Figure FO5–32. | Redundant Switching (8 Sheets) | FP–5–477 |
| Figure 6–1. | DELETED | |
| Figure 6–1. | System Fault Isolation Flowchart (8 Sheets) | FP–6–127 |
| Figure 6–2. | RDA Fault Isolation Flowchart (57 Sheets) | FP–6–143 |
| Figure 6–3. | Example of Noise Contamination in Outer Annular Ring (AU3) | 6–257 |
| Figure 6–4. | Example of Col – Contamination Over Entire Usable Area of Monitor Display | 6–258 |
| Figure 6–5. | Transmitter Secondary Fault Isolation Flowchart (39 Sheets) | FP–6–263 |
| Figure 6–6. | Antenna/Pedestal Secondary Flowchart | FP–6–343 |
| Figure 6–7. | Video Output Versus IF Input | 6–354 |
| Figure 6–8. | Video Output Versus RF Input | 6–357 |
| Figure 6–9. | HSP Secondary Fault Isolation Flowchart (21 Sheets) | FP–6–377 |
| Figure 6–10. | PSP Secondary Fault Isolation Flowchart (9 Sheets) | FP–6–429 |

| Figure | Title | Page |
|---|---|---|
| Figure 6–11. | Signal Processor (PSP/HSP) UD5A9 and UD5A10 Layout | 6–507 |
| Figure 6–12. | PSP/HSP Card Extractor Tool (Engaged) | 6–508 |
| Figure 6–13. | PSP/HSP Sample LRU Layout Scheme (Top View) | 6–510 |
| Figure 6–14. | Test Point Jumper Locations, ACU3 Card UD5A9A6 | 6–514 |
| Figure 6–15. | PROM BURN Execution Display Sequence | 6–515 |
| Figure 6–16. | RDASC UD5A12 Component Layout and Strapping Index | 6–517 |
| Figure 6–17. | Typical RDASC Processor Circuit Card Physical Features | 6–518 |
| Figure 6–18. | RDASC Processor UD5A12 Edge Connected Cables | 6–519 |
| Figure 6–19. | CONN–0/CONN/–1 Layout and RACK0/TACK0 Strapping | 6–520 |
| Figure 6–20. | RDASC Processor UD5A12 (Rearview) Terminator Board Locations | 6–523 |
| Figure 6–21. | Terminator (35–813M01) | 6–524 |
| Figure 6–22. | Terminator (35–814, F02 Variation) | 6–524 |
| Figure 6–23. | S–bus Terminator Board (35–886) | 6–525 |
| Figure 6–24. | Two Half–Boards Assembled | 6–528 |
| Figure 6–25. | 8 MB CMM UD5A12A6 Strapping | 6–531 |
| Figure 6–26. | DMI UD5A12A5 Strapping | 6–532 |
| Figure 6–27. | VCI–C Board UD5A12A18 Strapping | 6–533 |
| Figure 6–28. | TODY Clock UD5A12A20A1 Battery Location | 6–534 |
| Figure 6–29. | LSU UD5A12A20A2 Strapping | 6–535 |
| Figure 6–30. | 8–Line COM MUX UD5A12A19 Strapping | 6–536 |
| Figure 6–31. | FAA RMS 8–Line COM MUX UD5A12A19 Strapping | 6–537 |
| Figure 6–32. | SELCH UD5A12A13, UD5A12A15 Strapping | 6–538 |
| Figure 6–33. | PSPI UD5A12A14 Strapping | 6–539 |
| Figure 6–34. | ODC UD5A12A12 Strapping | 6–540 |
| Figure 6–35. | Elevation/Azimuth Manual Drive Assembly | 6–607 |
| Figure 6–36. | Elevation Gearbox/Motor Removal/Installation | 6–619 |
| Figure 6–37. | Pedestal Stow Pins Engaged (2 Sheets) | 6–626 |
| Figure 6–38. | Azimuth Assembly | 6–630 |
| Figure 6–39. | Azimuth Gearbox/Data Package (2 Sheets) | 6–642 |
| Figure 6–40. | Azimuth Gearbox Motor Removal/Installation | 6–644 |
| Figure 6–41. | Pedestal Stow Pins Engaged (2 Sheets) | 6–649 |
| Figure 6–42. | Receiver Front End/Linear Polarization Equipment (3 Sheets) | 6–674 |
| Figure 6–42A. | Waveguide Flange Hardware Tightening Sequence | 6–684 |
| Figure 6–43. | CDS Master Module UD5PS5A3 Strapping/Switch Settings | 6–706 |
| Figure 6–44. | Upper Temperature Sense Module UD5A12A3 | 6–710 |
| Figure 6–45. | CDS Patch Panel | 6–713 |
| Figure 6–46. | RDA SCSI Layout | 6–719 |
| Figure 6–47. | SCSI Tape Drive UD5A5A1 Strapping (2 Sheets) | 6–721 |
| Figure 6–48. | SCSI Disk Drive UD5A5A2 Strapping (2 Sheets) | 6–723 |
| Figure 6–49. | SCSI Mounting Brackets | 6–725 |
| Figure 6–50. | Main Setup Menu | 6–736 |
| Figure 6–51. | Initial Brush Block Installation/Alignment | 6–738 |

| Figure | Title | Page |
|---|---|---|
| Figure 6–52. | Final Brush Block Alignment | 6–739 |
| Figure 6–53 | VME Wideband Board UD5A1A2/A3 Strapping | 6–746 |
| Figure 6–54. | VCI–V Board UD5A1A1 Strapping | 6–747 |
| Figure 6–55. | AC Fan Tray Sensor Board UD5A13A1A1 Strapping | 6–753 |
| Figure 6–56. | Pedestal Assembly (2 Sheets) | 6–777 |
| Figure 6–57. | Pedestal Assembly (Azimuth Assembly) | 6–779 |
| Figure 6–58. | Manual Drive Assembly | 6–780 |
| Figure 6–59. | Pedestal Stow Pins Engaged (2 Sheets) | 6–781 |
| Figure 6–60. | Azimuth Stow Pin Assembly (2 Sheets) | 6–783 |
| Figure 6–61. | Pedestal Assembly (Elevation Assembly) | 6–785 |
| Figure 6–62. | Azimuth Assembly UD2A3 (2 Sheets) | 6–798 |
| Figure 6–63. | Elevation Switch UD2A1 | 6–800 |
| Figure 6–64. | RDA Thermostats | 6–803 |
| Figure 6–65. | Equipment Shelter A/C Thermostats UD7S3/UD7S4 | 6–804 |
| Figure 6–66. | Interior AC Configuration | 6–805 |
| Figure 6–67. | Transmitter Air Intake System | 6–808 |
| Figure 6–68. | Clogged Filter Indicator UD7A14/UD7A15/UD7A16/UD7A44 | 6–809 |
| Figure 6–69. | Transmitter Intake Vent Louvers Location | 6–810 |
| Figure 6–70. | Receiver Cabinet UD4 | 6–814 |
| Figure 6–71. | ±18 Vdc Receiver Power Supply Test Adjustment Points, UD4PS1 | 6–815 |
| Figure 6–72. | ±15 Vdc Receiver Power Supply Test Adjustment Points, UD4PS8 | 6–816 |
| Figure 6–73. | 5, 9, and 5.2 Vdc Receiver and RDADP Power Supply Test and Adjustment Points, UD4PS2, PS4 through PS7, and PS9 | 6–817 |
| Figure 6–74. | Receiver Cabinet UD4, Internal View | 6–829 |
| Figure 6–75. | Radar Receiver UD4, Component Layout (Rear View) | 6–835 |
| Figure 6–76. | IF Amplifier/Limiter UD4A9 | 6–836 |
| Figure 6–77. | I & Q Phase Detector UD4A10 | 6–841 |
| Figure 6–78. | AGC Clock 2 and A/D Converter Track/Hold Signal | 6–844 |
| Figure 6–79. | AGC Clocks 1 and 2 | 6–846 |
| Figure 6–80. | Guard Band IF Amplifier UD4A14 | 6–852 |
| Figure 6–81. | RF/IF Test Monitor UD4A31 Location | 6–856 |
| Figure 6–82. | RDA Maintenance Panel UD5A2 | 6–857 |
| Figure 6–83 | Reflectivity Calibration Block Diagram (5 Sheets) | FP–6–861 |
| Figure 6–84. | DCU Analog PWA UD5A6A1 | FP–6–1011 |
| Figure 6–85. | Set Terminal Characteristics Menu | 6–1050 |
| Figure 6–86. | First Configuration Service Submenu | 6–1050 |
| Figure 6–87. | Level II Configuration Menu | 6–1051 |
| Figure 6–88. | Global Parameters Form Menu | 6–1051 |
| Figure 6–89. | Second Configuration Added to Form Menu | 6–1052 |
| Figure 6–90. | Name Type Form Menu | 6–1055 |
| Figure FO6–1. | Adaptation Data Functional Block Diagram (2 Sheets) | FP–6–1065 |
| Figure FO7–1. | NEXRAD System Interface Diagram (Wideband between RDA (UD5), RPG (UD22 or UD70), and PUP (UD41)) | FP–7–347 |

| Figure | Title | Page |
|---|---|---|
| Figure FO7-2. | NEXRAD System Interface Diagram (Wideband between RDA (UD5) and MLOS Radio (UD19)) | FP-7-349 |
| Figure FO7-3. | Radar Data Acquisition Group (RDA) ICD | FP-7-351 |
| Figure FO7-4. | Redundant Radar Data Acquisition Group (RDA) ICD | FP-7-353 |
| Figure FO7-5. | RDA Shelter Assembly UD1 ICD (2 Sheets) | FP-7-355 |
| Figure FO7-6. | FAA Redundant RDA Shelter Assembly UD1 ICD (3 Sheets) | FP-7-359 |
| Figure FO7-7. | NWS Redundant RDA Shelter Assembly UD1 ICD (2 Sheets) | FP-7-365 |
| Figure FO7-8. | Antenna/Pedestal Group ICD (2 Sheets) | FP-7-369 |
| Figure FO7-9. | Radar Receiver, UD4 ICD (5 Sheets) | FP-7-373 |
| Figure FO7-10. | RDA Data Processor UD5 (ICD) (4 Sheets) | FP-7-383 |
| Figure FO7-11. | NWS Redundant RDA Data Processor UD5/UD105 (ICD) (8 Sheets) | FP-7-391 |
| Figure FO7-12. | FAA Redundant RDA Data Processor UD5/UD105 ICD (2 Sheets) | FP-7-407 |
| Figure FO7-13. | RDA Receiver Cabinet UD4/104, Power Distribution Diagram (5 Sheets) | FP-7-41 1 |
| Figure FO7-14. | RDA Data Processor Cabinet UD5, Power Distribution Diagram (9 Sheets) | FP-7-421 |
| Figure FO7-15. | NWS Redundant Configuration Remote Power Shutdown (2 Sheets) | FP-7-439 |

# LIST OF TABLES


| Table | Title | Page |
|---|---|---|
| Table 1-1. | Radar Data Acquisition Group Reference Designations | 1-3 |
| Table 1-2. | Radar Data Acquisition Group Physical Dimensions and Weights | 1-7 |
| Table 1-3. | Radar Data Acquisition Group Power Requirements | 1-7 |
| Table 1-4. | Antenna/Pedestal Weight Breakdown | 1-8 |
| Table 1-5. | Radar Data Acquisition Group Capabilities | 1-9 |
| Table 1-6. | Radar Data Acquisition Group Characteristics | 1-9 |
| Table 1-7. | Azimuth Rotary Joint UD2A1A4 Electrical Characteristics | 1-13 |
| Table 1-8. | Elevation Rotary Joint UD2A1A5 Electrical Characteristics | 1-13 |
| Table 1-9. | Hardwired Signal Processor and Programmable Signal Processor Tasks | 1-46 |
| Table 1-10. | RDA Group Reference Publications | 1-53 |
| Table 4-1. | Parameter Options | 4-17 |
| Table 4-2. | Receiver UD4, Controls and Indicators | 4-36 |
| Table 4-3. | RDA Maintenance Panel UD5/105A2, Controls and Indicators | 4-39 |
| Table 4-4. | Swing-Out Power Subsystem (SOPS) UD5PS5 Controls and Indicators | 4-42 |
| Table 4-5. | CDS Master Module UD5PS5A3 Controls and Indicators | 4-44 |
| Table 4-6. | CDS Master Module UD5PS5A3 LED Status | 4-44 |
| Table 4-7. | RDA Maintenance Terminal UD5A4, Controls and Indicators | 4-46 |
| Table 4-8. | Pedestal Power Amplifier Unit UD5A7, Controls and Indicators | 4-47 |
| Table 4-9. | SCSI Assembly UD5A5, Controls and Indicators | 4-48 |
| Table 4-10. | VME Assembly UD5A1 Controls and Indicators | 4-50 |
| Table 4-11. | VME Wideband Board UD5A1A2/A3, Controls and Indicators | 4-52 |
| Table 4-12. | VMEbus to Concurrent I/O Bus Interface Board (VCI-V) UD5A1A1, Controls and Indicators | 4-54 |
| Table 4-13. | VMEbus to Concurrent I/O Bus Interface Board (VCI-C) UD5A12A18, Controls and Indicators | 4-56 |
| Table 4-14. | RDA Power Supplies PS2 and PS3, Controls and Indicators | 4-57 |
| Table 4-15. | AC Power Distribution Panel UD5A14, Controls and Indicators | 4-59 |
| Table 4-16. | CSU UD5A18, Controls and Indicators | 4-62 |
| Table 4-17. | Automatic A/B Wideband Communication Switch UD5A19, Controls and Indicators | 4-65 |
| Table 4-18. | STATMUX UD105A20, Controls and Indicators | 4-67 |
| Table 4-19. | Dial Port Modem UD105A21 (Standalone), Controls and Indicators | 4-69 |
| Table 4-20. | DELETED | |
| Table 4-21. | A/B Switch UD5A17/UD105A17, Controls and Indicators | 4-72 |
| Table 4-22. | Dual A/B Switch UD5A17, Controls and Indicators | 4-74 |
| Table 4-23. | RDA Group Interlocks | 4-74 |
| Table 4-24. | T4-Disk/Tape Backup Procedure | 4-76 |
| Table 4-25. | Backup Format Options | 4-82 |

| Table | Title | Page |
|---|---|---|
| Table 4-26. | Fastchek Procedure | 4-84 |
| Table 4-27. | Display File Names Procedure | 4-86 |
| Table 4-28. | RDA Data Processor Clock Time Set Procedure | 4-89 |
| Table 4-29. | Software Installation Tape Loading Procedure | 4-92 |
| Table 4-30. | OS/32 Command Format and Error Responses | 4-104 |
| Table 4-31. | OS/32 Operator Command Error Messages | 4-131 |
| Table 4-32. | Initiate Immediate RDA “System Test” Check Procedure | 4-137 |
| Table 4-33. | CDS Key Commands | 4-142 |
| Table 4-34. | KEY 0 Commands and Format | 4-143 |
| Table 4-35. | KEY 1 Commands and Format | 4-149 |
| Table 4-36. | KEY 2 Commands and Format | 4-164 |
| Table 4-37. | Global Advisory Messages | 4-166 |
| Table 4-38. | Swing-Out Power Subsystem (SOPS) Advisory Messages | 4-167 |
| Table 4-39. | M3200 Advisory Messages | 4-167 |
| Table 4-40. | Summary RDA Status | 4-171 |
| Table 4-41. | RDA Maintenance Terminal Commands | 4-173 |
| Table 4-42. | Maintenance Log Data | 4-180 |
| Table 4-43. | Archive II Procedures | 4-181 |
| Table 4-44. | Change Adaptation Data (ICRA) | 4-186 |
| Table 4-45. | DELETED | |
| Table 4-46. | Switching FAA Redundant Channels Remotely from the Distant MSCF | 4-193 |
| Table 4-47. | DELETED | |
| Table 4-48. | Switching FAA Redundant Channels Locally Starting at MSCF | 4-195 |
| Table 4-49. | DELETED | |
| Table 4-50. | Switching NWS Redundant Channels Remotely Starting at MSCF | 4-201 |
| Table 4-51. | DELETED | |
| Table 4-52. | Switching NWS Redundant Channels Locally Starting at MSCF | 4-208 |
| Table 4-53. | RDA Control Commands | 4-222 |
| Table 4-54. | Options in Control Receiver/Signal Processor | 4-260 |
| Table 4-55. | System Information Messages | 4-273 |
| Table 4-56. | System Fault Messages | 4-275 |
| Table 5-1. | Transmitter Fault Monitoring Data | 5-28 |
| Table 5-2. | IF Attenuation Increments | 5-43 |
| Table 5-3. | Receiver Test Function | 5-51 |
| Table 5-4. | Control Drive Signal | 5-54 |
| Table 5-5. | RF Digital Attenuator Operation | 5-55 |
| Table 5-6. | RF Digital Attenuator Control | 5-55 |
| Table 5-7. | 2-Position Switch Operation | 5-55 |
| Table 5-8. | HSP LRU versus Functionality Matrix | 5-73 |
| Table 5-9. | Destination 7 Input Word to Receiver/HSP | 5-74 |
| Table 5-10. | Default Notch Width Map Adaptation Data Example | 5-80 |
| Table 5-11. | Signal Processing Program (CPCI 02) Functions vs. Subfunctions | 5-102 |

| Table | Title | Page |
|---|---|---|
| Table 5-12. | Trigger Selection | 5-128 |
| Table 5-13. | Interrupt Assignments | 5-130 |
| Table 5-14. | System Information Messages | 5-158 |
| Table 5-15. | System Fault Messages | 5-159 |
| Table 5-16. | RDASC LEDs | 5-163 |
| Table 5-17. | RDASC Processor to Data Acquisition Unit | 5-176 |
| Table 5-18. | Processor to DAU Data | 5-176 |
| Table 5-19. | DAU to Processor Data | 5-178 |
| Table 5-20. | DAU to Processor Data (Discrete) | 5-179 |
| Table 5-21. | DAU to Processor Data (Analog) | 5-183 |
| Table 5-22. | Analog Signal Characteristics | 5-184 |
| Table 5-23. | Transmitter Fault Status | 5-195 |
| Table 5-24. | Transmitter Status Alarm Description | 5-199 |
| Table 5-25. | Tower Utilities Discrete Monitoring Points | 5-201 |
| Table 5-26. | Tower Utilities Temperature | 5-203 |
| Table 5-27. | Self Test Data - Pedestal to RDA Data Processor | 5-220 |
| Table 5-28. | Pedestal BIT Data | 5-221 |
| Table 5-29. | Power Subsystem Replaceable Components | 5-235 |
| Table 5-30. | DC Power Supply Output Destinations | 5-236 |
| Table 5-31. | RDASC Control Commands | 5-255 |
| Table 5-32. | RDA State Transition Matrix | 5-257 |
| Table 6-1. | RDA Preventive Maintenance Index | 6-6 |
| Table 6-2. | Flowchart Note Index | 6-14 |
| Table 6-3. | RDA Alarms - Inoperative | 6-16 |
| Table 6-4. | RDA Alarms - Maintenance Mandatory | 6-19 |
| Table 6-5. | RDA Alarms - Maintenance Required | 6-30 |
| Table 6-6. | RDA Alarms - Secondary Alarms | 6-32 |
| Table 6-7. | LVPS Loads | 6-349 |
| Table 6-8. | Power Subsystem (08) Error Messages | 6-418 |
| Table 6-9. | Global (30) Error Messages | 6-420 |
| Table 6-10. | Basic Confidence Test Error Messages | 6-424 |
| Table 6-11. | M3200 (11) Error Messages | 6-424 |
| Table 6-12. | RDA Replacement Procedure Index | 6-457 |
| Table 6-13. | RDA Group Shutdown Procedure | 6-471 |
| Table 6-14. | Deleted | |
| Table 6-15. | RDA Group Startup Procedure | 6-492 |
| Table 6-16. | Signal Processor DIP Switch Settings | 6-51 1 |
| Table 6-17. | EEPROM Microcode Installation Procedure | 6-512 |
| Table 6-18. | RDA M3200 Processor Assembly, UD5A12, Terminator Locations | 6-524 |
| Table 6-19. | Half-Board UD5A12A20A1 and UD5A12A20A2 Disassembly/Assembly Procedure | 6-529 |
| Table 6-20. | Waveguide Cross Reference Index | 6-685 |
| Table 6-21. | Special Function Characters | 6-735 |

| Table | Title | Page |
|---|---|---|
| Table 6–22. | RDA Group Circuit Breaker Identification | 6–758 |
| Table 6–23. | LRU Alignment/Adjustment Index | 6–765 |
| Table 6–24. | Center Frequency | 6–826 |
| Table 6–25. | Unit Designation Conversion | 6–858 |
| Table 6–26. | Adaptation Data Required for RDA Calibration | 6–877 |
| Table 6–27. | On–Line Calibration Data, Short Pulse | 6–887 |
| Table 6–28. | Solar Flux Correction for Site Frequency | 6–898 |
| Table 6–29. | Suncheck Subtest 2 Results | 6–899 |
| Table 6–30. | Final Data Record | 6–901 |
| Table 6–31. | Off–Line Calibration Data | 6–913 |
| Table 6–32. | On–Line Calibration Data, Long Pulse | 6–923 |
| Table 6–33. | RDA Adaptation Data Required for Noise Source Calibration | 6–968 |
| Table 6–34. | Calibration of Adapters and Test Cable | 6–971 |
| Table 6–35. | Delayed Klystron Sampling Calibration | 6–995 |
| Table 6–36. | Solar Flux Correction for Site Frequency | 6–997 |
| Table 6–37. | Suncheck Subtest 2 Results | 6–998 |
| Table 6–38. | Unit Designation Conversion | 6–1017 |
| Table 6–39. | Path Loss Measurement | 6–1025 |
| Table 6–40. | RIOS Path Loss Measurement | 6–1028 |
| Table 6–41. | Path Loss/Value Determined by Alignment Procedures | 6–1030 |
| Table 6–42. | Port Name and Parameters | 6–1055 |
| Table 7–1 | Cable From/To Information | 7–3 |
| Table 7–2. | Running Wire List | 7–22 |

# FOREWORD

This technical manual provides operating and maintenance personnel with maintenance instructions for the Radar Data Acquisition (RDA) group of Doppler Meteorological Radar WSR-88D. It describes the purpose, structure, and functioning of the RDA group and discusses its operating and maintenance concepts. This manual was prepared in accordance with the content requirements of MIL-M-38798B and the format requirements of MIL-M-38784B, as amended by TMCR AF TM-86-01/NEXRAD (June 1987). It consists of seven chapters, an index and a glossary.

Chapter 1 General Information. This chapter introduces the RDA group equipment, provides descriptions of the RDA group equipment and software, and provides reference data.

Chapter 2 Not Used.

Chapter 3 Not Used.

Chapter 4 Operations. This chapter provides detailed operating information for the RDA group.

Chapter 5 Theory of Operations. This chapter provides the functional operation of the RDA Group.

Chapter 6 Maintenance. This chapter provides maintenance instructions for the RDA group. The information presented includes fault isolation, replacement and setup procedures as well as alignment and adjustment procedures.

Chapter 7 Reference Data. This chapter provides interconnection reference data for the RDA group. This chapter also provides power distribution diagram.

Index

Glossary

This manual is one of a family of technical manuals which provide various levels of description, operation, maintenance, and logistics information on the WSR-88D. Refer to TO 31-1-141, Basic Electronic Technology and Testing Practices, for any basic electronic technology or testing practice that is not fully described in these documents. The WSR-88D technical manual family is defined and discussed in Chapter 1 of NWS EHB 6-500.

The format of this technical manual is as follows:

- Since sections represent the major content divisions of the chapter or appendix, they are formatted as physically-separate standalone elements.
- Sections are numbered as subdivisions of the chapter or appendix. The section numbering system consists of two digits separated by a hyphen. The first digit indicates the chapter or appendix, the second digit indicates the section. Thus, Section 3-2 represents the second section of Chapter 3.

- Paragraph numbering is by section rather than by chapter. The basic numbering system consists of three digits, where the first two digits identify the section

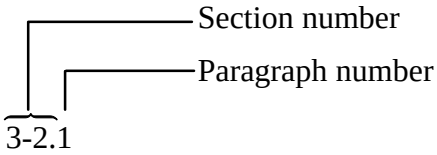


- A decimal paragraph number system is used to identify paragraph subordination

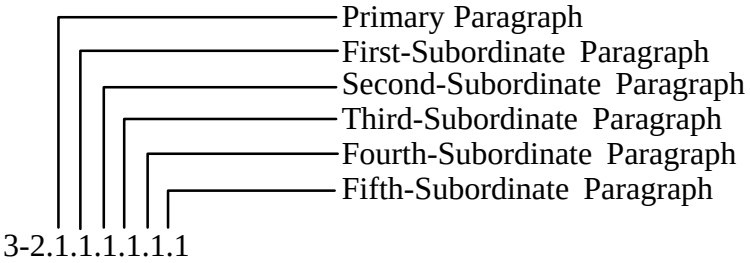


- Pages, tables, and figures are numbered by chapter or appendix. The number consists of two digits separated by a hyphen. The first digit identifies the chapter or appendix. The second digit identifies the page, table, or figure.
- The prefix FO is added to all foldout figure numbers to identify them as foldouts.

# SAFETY SUMMARY

## GENERAL SAFETY

The following are general safety precautions that are not related to specific procedures and therefore do not appear elsewhere in this publication. These are recommended precautions that personnel must understand and apply during many phases of operation and maintenance.

## KEEP AWAY FROM LIVE CIRCUITS

Maintenance personnel must at all times observe all safety regulations. Do not replace components or make adjustments inside the equipment with the high voltage supply turned on. Under certain conditions, dangerous potentials may exist when the power control is in the off position due to charges retained by capacitors. To avoid casualties, always remove power and discharge by grounding a circuit before touching it.

## DO NOT SERVICE OR ADJUST ALONE

Under no circumstances should any person reach into or enter an enclosure for the purpose of servicing or adjusting the equipment except in the presence of someone who is capable of rendering aid.

## RESUSCITATION

Personnel working with or near high voltage should be familiar with modern methods of CPR. Such information may be obtained from the Red Cross or Heart Association. This knowledge may save a life.

## DO NOT WEAR JEWELRY

Personnel performing maintenance on equipment are not to wear watches, rings, necklaces, bracelets or other jewelry at any time. Electrical arcing can occur when metallic objects are in the proximity of voltages potentials. Jewelry can become entangled or otherwise restrict movement causing severe personal injury.

## ELECTRICAL/ELECTRONIC (GENERAL)

Voltages used in this equipment can cause arcing and may result in electric shock. Avoid contact and remove rings, watches, and other jewelry which may cause personal injury from electrical shock.

## HIGH VOLTAGE (POWER ON)

Avoid contact with high voltage in the equipment, and do not remove safety guards, panels, or covers in the high voltage area. Severe injury or **DEATH** may occur upon contact with or in the proximity of high voltages due to electrical shock. Personnel will wear non-conductive protective headgear when working in the proximity of energized and exposed circuits which could contact the head.

## HIGH VOLTAGE (POWER OFF)

Avoid contact with the high voltage circuit area. Properly discharge all high voltage capacitors with the grounding rod. Dangerous high voltages exist when power is turned off and will

remain until discharged. Severe injury or **DEATH** may occur upon contact with or in the proximity of high voltages due to electrical shock.

ROTATING EQUIPMENT

Stay clear of the antenna dish during rotation. Severe injury or **DEATH** may occur from being crushed by the antenna dish.

ELEVATED WORK PLATFORM

Use all handrails, safety chains, safety harnesses, safety rails, and ladders properly while servicing the antenna pedestal and tower. Install all safety equipment and ladders prior to maintenance tasks. Severe injury or **DEATH** may occur from impacting the surface below.

FIRE SUPPRESSION

Evacuate the area immediately upon discharge of a fire suppression device (fire extinguisher). Asphyxiation or **DEATH** may occur from prolonged exposure to some fire supression agents.

HOT SURFACES

Avoid contact with the diesel engine and exhaust pipes during and after engine operation. Contact with hot surfaces can cause skin burns and other injuries reacting to hot surfaces.

EXPLOSIVE GAS (FUEL)

Clean and remove all fuel spills during engine service with absorbent materials or cloths. Ventilate the area of fuel spills and cleanup. Avoid sparks and open flames in the area. Fumes may accumulate and explode causing severe burns or **DEATH**.

EXPLOSIVE GAS (BATTERIES)

Service batteries only in a well-ventilated area. Hydrogen gas may accumulate during the charging process. Avoid sparks or open flames near batteries. Severe burns or **DEATH** may occur due to explosion.

SULFURIC ACID

Wear protective clothing, face shields, gloves, and aprons when servicing batteries. Severe skin and eye injury may occur upon contact with battery acid. Flush skin and eyes with water immediately and get medical attention.

CLEANING SOLVENTS (GENERAL)

Wear protective clothing, safety goggles, and gloves when using toxic cleaning solvents. Repeated and prolonged contact may cause skin and eye irritation. Flush skin and eyes with water. Remove clothing saturated with cleaning solvent.

CLEANING SOLVENTS (INHALATION)

Use cleaning solvents only in a well-ventilated area. Avoid inhalation of cleaning solvents. Asphyxiation or **DEATH** may occur from prolonged exposure to fumes.

REFRIGERANT (GENERAL)

Wear protective clothing and gloves when servicing the refrigerant of air conditioning equipment. Contact with refrigerant-filled pipes and fittings may cause severe skin burn.

REFRIGERANT (INHALATION)

Avoid inhalation of refrigerant. Breathing refrigerant is hazardous to personnel.

HEARING LOSS (GENERATOR)

Wear ear protection near the diesel generator set while in operation. Hearing loss can occur from prolonged exposure to high noise.

HEARING LOSS (TRANSMITTER)

Wear ear protection when transmitter center cabinet door is opened for extended periods or while tuning the klystron. Hearing loss can occur from prolonged exposure to high noise.

PERFORM WORK EFFICIENTLY

When working in areas designated as hazardous, perform work using the proper safety procedure. Be thoroughly familiar with the procedures required for the task before entering the area.

MICROWAVE RADIATION PRECAUTIONS

The WSR-88D generates and detects electromagnetic energy at a transmitted frequency between 2.7 GHz and 3.0 GHz. This non-ionizing radiation is concentrated in the antenna beam. The potential hazard of this radiation to personnel is biological heating. Intense microwave radiation (power densities greater than 300 $mW/cm^2$) can result in biological damage such as the formation of cataracts or other opacities in the eyes and “cook” internal organs.

Service personnel must comply with the guidelines given in American Standards Institute C.95.1-1982 which states that for unrestrictive exposure to microwave radiation the body energy deposition averaged over the entire body mass for any 0.1 hour period must be kept to less than 144 joules per kilogram (J/kg). This is equivalent to a specific absorption rate (SAR) of 0.4 watts per kilogram. For the WSR-88D frequency band, this corresponds to a power density of 5 $mW/cm^2$.

Average power densities less than 5 $mW/cm^2$ are regarded as safe for indefinite exposure. Power densities greater than 5 $mW/cm^2$ should be regarded as potentially hazardous.

DIRECT ANTENNA INTO OPEN AREA WHEN TRANSMITTING

When it is necessary to perform maintenance with power radiating from the antenna, take the necessary steps to keep the antenna directed into open area whenever possible.

SECURE ALL MATERIAL WHEN NOT IN USE

Secure all tools, chassis, and covers before operating equipment.

RESTORE ALL INTERLOCKS

Restore all interlock switches to normal operating condition immediately upon completion of work on the unit involved.

DO NOT USE METAL TOOLS NEAR EXPOSED PARTS

Do not use brushes, brooms, or other tools that have exposed metal parts within four feet of any electrical equipment having exposed current-carrying parts.

DO NOT USE FERROUS TOOLS OR INSTRUMENTS NEAR KLYSTRONS

Do not use steel or iron tools near klystrons. Such tools may be pulled from the technicians grasp and cause damage to the tube.

SOLDERING PRECAUTIONS

Wear a face shield or safety goggles when soldering. **NOTE**: Normal prescription glasses or plain safety glasses may be used in place of safety goggles for light electronic equipment soldering. Never sling excess solder from a soldering iron; wipe it off with a damp cloth or sponge. Never leave the iron plugged in and unattended. When soldering is performed, ensure work areas are well ventilated.

SPECIFIC SAFETY

TOWER SAFETY

To prevent death or severe injury in falling from the tower, the following procedures must be followed:

- Use hand rails and rest platforms when using the stairs for access to/from Antenna areas.
- Ensure that the Antenna floor hatch is closed and secured at all times when not in use.

ELECTRICAL SHOCK HAZARDS

Prime power voltages and high voltages within cabinets can cause death or severe injury. These voltages are contained in the generator area, the Radar Data Acquisition (RDA) area and Antenna area. Warning signs and labels are located on the guards and barriers to alert personnel of the potential hazard. DO NOT DISREGARD THESE WARNINGS. Ensure that safety interlocks, barriers, and guards are not bypassed.

In the RDA, the CRT has extremely high voltages present that can cause DEATH or severe injury.

The transmitter high voltage can also cause DEATH or severe injury. Warning labels and interlocks are present to prevent electrical shock. DO NOT BYPASS INTERLOCKS.

RADIATION HAZARD

Microwave (electromagnetic) radiation exists during the operation of the WSR-88D. A cylindrical volume of 40 ft diameter and 600 ft length in front of the antenna reflector has a radiant power density of greater than the ANSI-designated maximum safe level of 5 $mW/cm^2$. Anything within this volume is subject to unsafe non-ionizing radiation. Unsafe limits are defined as a power

density of 5 mW/cm$^2$ or greater averaged over 6 minutes. During all operational modes, the antenna is scanning continuously and the antenna is always pointed up from the ground by at least 0.5 degrees. Consequently, the ANSI-designated maximum safe power density level of 5 mW/cm$^2$ is not exceeded anywhere at ground level. However, if the scanning is stopped for any reason with the transmitter energized, this level may be exceeded within the unsafe cylindrical volume as indicated in Figure SS-1. Such a condition must never be induced with the antenna pointing in a direction that could be inhabited by people or stationary animals.

Various safety provisions are built into the equipment to inhibit the radiation if the antenna stops rotating for any reason. If the computer fails, the DAU will time out in 6 seconds and switch the waveguide switch to the dummy load position. The operational software and RDASOT software will automatically inhibit transmission if the pedestal stops rotating for 30 seconds. The RDASOT does allow special override of this provision for a maximum of 5 minutes to run certain tests but these must never be run with the antenna pointing at the ground (below +0.5 degrees).

The lowest level of elevation that may be commanded by the software is -1.0 degrees. Elevation angles down to -3.0 degrees require manually positioning the antenna. The antenna should never be pointed at the ground either operationally or for test purposes. Pointing the beam at an elevation which intersects the ground in the near distance could result in strong enough reflections to burn out the receiver protector. Such a condition should never be deliberately induced.

MAJOR EQUIPMENT DAMAGE

Mismating electrical connectors on the RDA can cause major equipment damage. Therefore, ensure that the connector keys/color coding is followed when reconnecting connectors during maintenance.

Loss of oil (lubricant) or glycol (coolant) from the generator engine could result in equipment damage. When performing maintenance, inspect for leaks and tighten fittings as needed. An automatic over temperature shut-off switch is used to prevent damage.

REMOVAL OF TOOLS

Remove all tools and dropped hardware such as locknuts, washers, screws, etc., from equipment prior to restoring power to any WSR-88D equipment.

HOIST SAFETY

Before operating the hoist, the operator shall be familiar with all operating controls of the hoist, and shall be instructed as to warnings on the hoist and the safe hoisting practices listed in the operator’s position of the manual provided by the hoist manufacturer.

NON-PERMIT CONFINED SPACE (ANTENNA PEDESTAL)

The NEXRAD Safety Officer has determined the three separate entry areas of the Antenna Pedestal are confined spaces, no permit required. As applied to the NEXRAD Antenna Pedestal application, a Confined Space is defined as: an opening that is: (1) large enough and so configured that an employee can enter bodily and perform assigned work, (2) having a limited means of egress, (3) not designed for continuous employee occupancy. A Non-Permit Confined

Space is defined as: A space that does not contain or, with respect to atmospheric hazards, have the potential to contain any hazards capable of causing death or serious physical harm. Reference: OSHA Standards 29 CFR, Part 1910, Subpart J, 1910.146 and NWS EHB 15, Section 12.

ANTENNA/PEDESTAL SAFETY

**WARNING**

Do not attempt to climb or service the pedestal assembly while the antenna is rotating and/or while the antenna servos are operating. Severe injury from moving elements may result unless all maintenance instructions and safety procedures are followed.

The antenna/pedestal is provided with safety features and procedures to protect maintenance personnel from hazards associated with moving masses, dangerous heights, and awkward equipment access/handling positions. The safety features provided on the antenna/pedestal assembly include the following:

- Safety interlock switch
- Grab bars
- Non-skid surface(s)
- Ladder hooks
- Stow pins.

**NOTE**

The Radome hatch is equipped with safety interlocks. When the hatch (interlock) is opened, servo power is removed from the Antenna Pedestal and the Transmitter high-power RF output is switched into the dummy load.

To ensure personnel safety, the following precautions must always be observed:

1. Turn off pedestal power at the RDA Data Processor Maintenance Panel.
2. Place SAFETY WARNING tags on the pedestal electronic ON/OFF switch on maintenance panel.
3. Ensure the transmitter is in STANDBY.
4. Place the pedestal PWR ON/SAFE Safety Interlock Switch to **SAFE**.
5. Engage azimuth and elevation stow pins.
6. Use riser ladder properly secured with quick-release pins when climbing the pedestal to work inside azimuth portion of the pedestal.
7. Always use grab bars when climbing the antenna pedestal.
8. Use the appropriate ladder hooks for the ladder for each work area on the antenna pedestal.

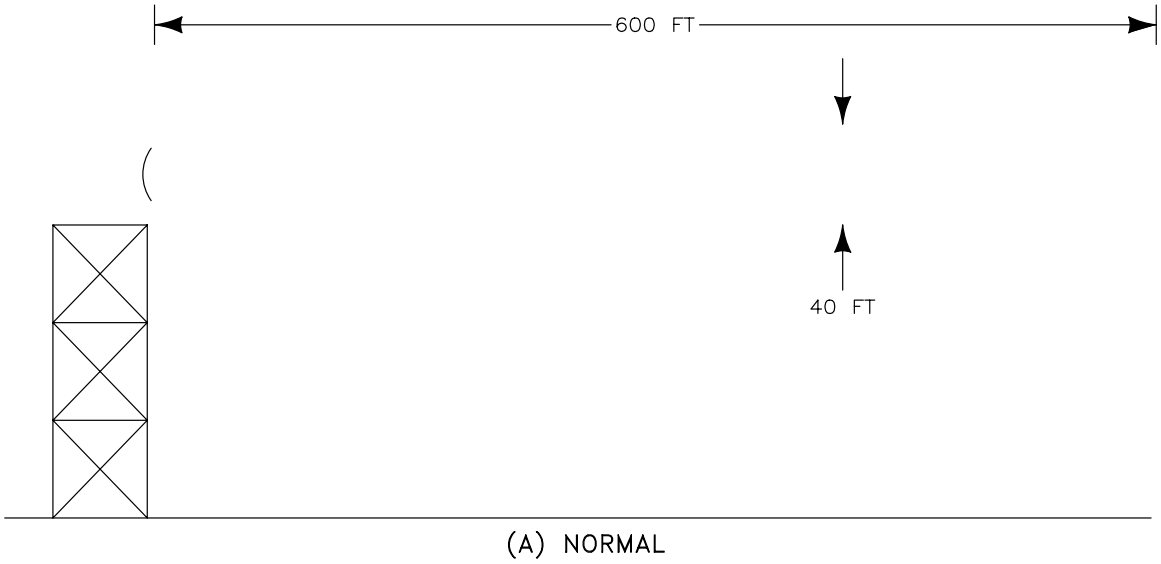


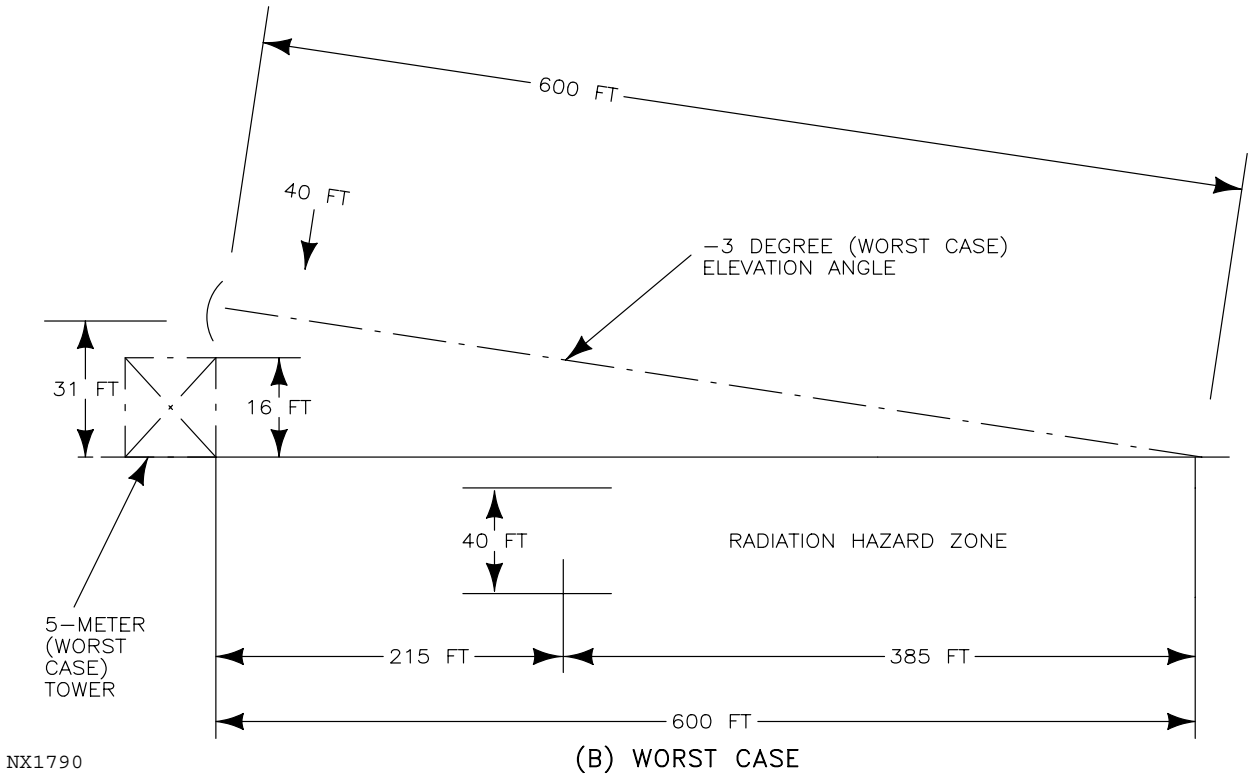


Figure SS-1. Radiation Hazard Zones

# CHAPTER 1

# GENERAL INFORMATION

## Section 1-1. Introduction

1-1.1 GENERAL.

This chapter is organized into the following sections:

- Section 1-1 - Introduction
- Section 1-2 - Equipment Description
- Section 1-3 - Software Description
- Section 1-4 - Reference Data

Section 1-1 identifies the equipment which makes up the Radar Data Acquisition (RDA) Group and describes its purpose and function. This section includes leading particulars such as capabilities, physical dimensions, and power requirements. Section 1-2 describes the equipment which makes up the RDA Group. Section 1-3 describes the software programs used in the RDA Group. Section 1-4 identifies the reference data required for the RDA Group.

**NOTE**

This chapter and its corresponding sections refer to the RDA Data Processor (RDADP) as UD5, the Receiver as UD4, the Transmitter as UD3, and the Waveguide Pressurization Unit as UD6. Unless otherwise specified, the information also applies to redundant systems UD105, UD104, UD103, and UD106.

1-1.2 RADAR DATA ACQUISITION GROUP EQUIPMENT.

The RDA Group contains the Doppler radar equipment which acquires and processes reflected radio frequency (RF) signals to obtain weather radar base data. The base data consists of measurements of reflectivity, mean radial velocity, and velocity spectrum width. Base data is available in analog and digital format for distribution to archiving and in digital format for the Radar Product Generation (RPG) Groups. The RDA is a self-contained unit designed for continuous, unattended operation. The RDA functional group includes the Doppler radar antenna, radar transmitter, radar receiver, and the associated hardware and software required to perform the signal processing, clutter suppression control, status monitoring and fault detection, local display, auto-calibration, and archiving functions related to the radar operation. There are two types of redundant systems. They are called the Federal Aviation Administration (FAA) Redundant System and the National Weather Service (NWS) Redundant System after the agencies which use them. Both types of redundant systems have a partial redundant RDA Group. There is only one tower, antenna, pedestal, generator, transition power source, and equipment shelter. The redundant RDA consists of an RDA Cabinet, UD105; Receiver Cabinet, UD104; Transmitter, UD103; and Waveguide Pressurization Unit, UD106. Both

redundant systems have waveguide switches to choose which transmitter and receiver have access to the antenna. The RDA also contains one terminus of the wideband communications equipment for high-speed intercomputer transfer of serial base data and control functions with its associated RPG Group. An optional second RDA wideband link can also be used for distribution of the radar base data to other Principal User External Systems (PUES). In an FAA redundant system there are two RDA cabinets and two RPGs: each RDA Group in a FAA redundant system communicates to its associated RPG. The NWS redundant system has two RDA cabinets, one RPG, and a Wideband Communication Switch UD5A19 which sends either RDA's information to the RPG. Table 1-1 lists the RDA equipment by reference designation. In a redundant system only one RDA Group has access and control of the antenna and pedestal equipment at a time. Each RDA Group can be referred to as a channel. Figure 1-1 shows the RDA Group equipment relationships and Figure 1-2 shows the Wideband Communication Group equipment.

### 1-1.3 LEADING PARTICULARS.

The following is a list of the leading particulars and their corresponding tables:

- RDA Group Physical Dimensions and Weights - Table 1-2
- RDA Group Power Requirements - Table 1-3
- Antenna/Pedestal Weight Breakdown - Table 1-4
- RDA Group Capabilities - Table 1-5
- RDA Group Characteristics - Table 1-6
- Azimuth Rotary Joint UD2A1A4 Electrical Characteristics - Table 1-7
- Elevation Rotary Joint UD2A1A5 Electrical Characteristics - Table 1-8

### 1-1.4 RADAR DATA ACQUISITION GROUP CAPABILITIES AND LIMITATIONS.

The RDA Group produces a 0.65 to 0.75 megawatt peak power signal at 2.7 to 3.0 GHz with a wide or narrow pulse for transmission. The RDA antenna rotates 360° and searches in elevation from -1° to +45°*. The RDA receives weather phenomena information in the form of reflected RF energy, converts it to digital format, filters and processes it in the receiver/signal processor, and sends it to the RDA status and control (RDASC) processor for base data transmittal to the RPG Group. The base data may also be archived. The RDA Group permits local/remote control with automatic power loss recovery. It also provides performance monitoring and fault isolation. Wideband communications is used to transfer data to the RPG. Archive I (an optional analog feature) and Archive II (digital base data) are for archiving of designated data. The RDA restart time is a function of outage time and the state of the RDA, but falls between the warm startup time of 10 seconds and the cold startup time of 15 minutes. Table 1-5 lists the RDA Group capabilities. Table 1-6 provides a listing of basic operational parameters and characteristics for the following RDA equipment:

- - - - -

* Currently defined scan strategies provide coverage to +20°.

- UD2 Antenna/Pedestal
- UD3 and UD103 Radar Transmitters
- UD4 and UD104 Radar Receivers
- UD5 and UD105 RDA Data Processors
- UD6 and UD106 Waveguide Pressurization Units

Table 1-7 and Table 1-8 provide electrical characteristics for the azimuth and elevation rotary joints, respectively.

Table 1-1. Radar Data Acquisition Group Reference Designations

| Reference Designation | Official Nomenclature |
|---|---|
| UD1 | Equipment Shelter Assembly |
| UD2 | Antenna/Pedestal Group Assembly |
| UD3 | Radar Transmitter (Channel 2) |
| UD4 | Radar Receiver (Channel 2) |
| UD5 | RDA Data Processor (Channel 2) |
| UD6 | Waveguide Pressurization Unit (Channel 2) |
| UD7 | Electrical Equipment Shelter |
| UD10 | RDA Site Generator Shelter |
| UD11 | Tower Assembly |
| UD12 | Radome |
| UD60 | Transition Power Maintenance Shelter |
| UD62 | Transition Power Source |
| UD103 | Radar Transmitter (Channel 1) |
| UD104 | Radar Receiver (Channel 1) |
| UD105 | RDA Data Processor (Channel 1) |
| UD106 | Waveguide Pressurization Unit (Channel 1) |

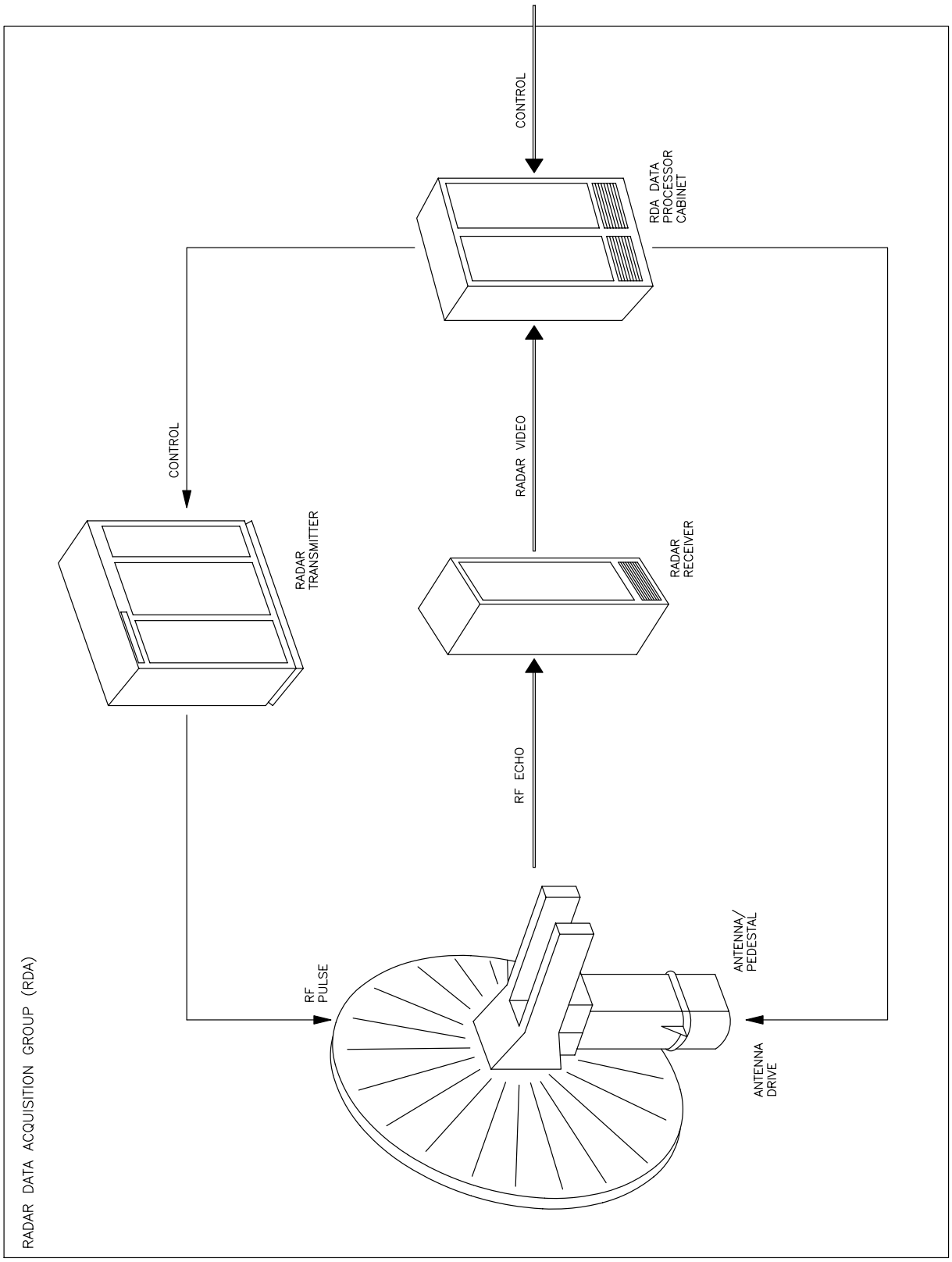


Figure 1-1. Radar Data Acquisition Group

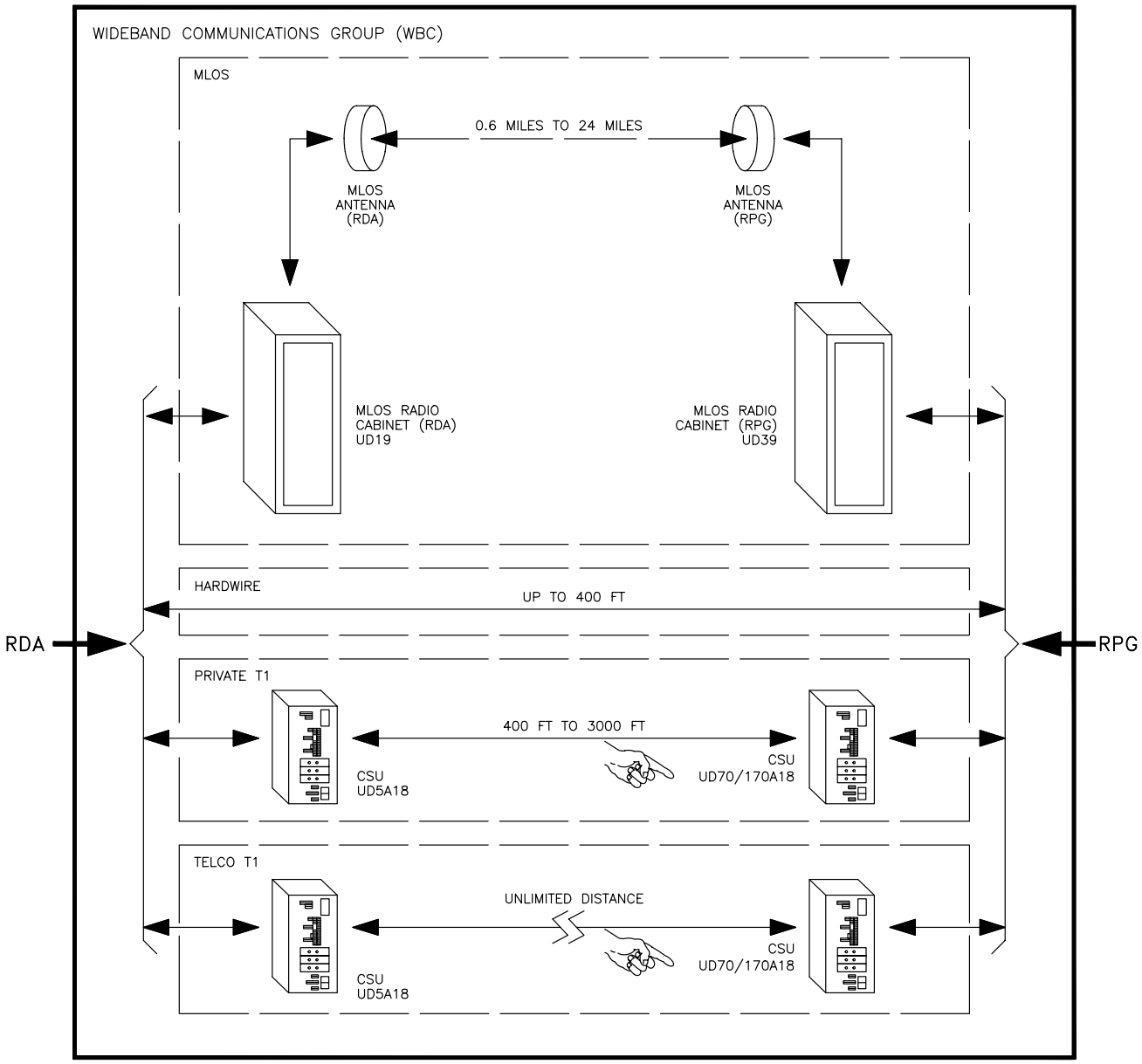


Figure 1-2. Wideband Communications Group

Figure 1-2, Sheet 2 on page 1-6 deleted.

Table 1-2. Radar Data Acquisition Group Physical Dimensions and Weights

| Equipment Nomenclature | Height | Width | Depth | Weight (Pounds) |
|---|---|---|---|---|
| Radome UD12 | 34′9.6″ | 38′8″ | 38′8″ | 7,500 |
| Antenna Dish | 28′ (diameter) | | | 2,600 |
| Pedestal Assembly with Riser | 16′8″ | 48″ | 48″ | 19,435 |
| Transmitter Cabinet UD3/103 | 80″ | 72″ | 30″ | 2,500 |
| Receiver Cabinet UD4/104 | 72″ | 24″ | 30″ | 400 |
| RDA Data Processor UD5/105 | 79″ | 48″ | 32″ | 1,200 |
| Waveguide Pressurization Unit UD6/106 | 21″ | 16″ | 10″ | 58 |
| Channel Service Unit UD5A18 | 1.75″ | 6″ | 11.75″ | 3 |

Table 1-3. Radar Data Acquisition Group Power Requirements

| Equipment Nomenclature | Voltage (Vac) | Frequency (Hz) | Phase | Power |
|---|---|---|---|---|
| Antenna/Pedestal UD2 | 208 | 60 | 3 | NOTE [1] |
| Transmitter UD3/103 | 208 | 60 | 3 | 15 kW |
| Receiver UD4/104 | 120 | 60 | 1 | 1.2 kW |
| RDA Data Processor | 208 | 60 | 3 | 3.0 kW |
| UD5/105 | 208 | 60 | 3 | 2.9 kW |
| | 120 | 60 | 1 | 2.0 kW |
| Pressurization Unit UD6/106 | 120 | 60 | 1 | 250 W |
| HVAC Air Conditioner (X2) | 208 | 60 | 3 | NOTE [2] |
| Heater Strip (X2) | 208 | 60 | 3 | 10 kW |
| Radome Vent Fan | 208 | 60 | 3 | 300 W |
| 10 kW Electric Heater Unit | 208 | 60 | 3 | 10 kW |
| Fire Detection Subsystem | 120 | 60 | 1 | 90 Watts |
| Channel Service Unit | 120 | 60 | 1 | 10 Watts |

- - - - -

[1] 1 kW normal running load; 3 kW at maximum acceleration, both axes.

[2] Power requirements are 5.1 kW minimum and 8.4 kW maximum.

Table 1–4. Antenna/Pedestal Weight Breakdown

| Component | Quantity | Weight (Pounds) |
|---|---|---|
| Riser | 1 | 2700 |
| Azimuth Housing[1] | 1 | 3376 |
| Azimuth Drive Train[2] | 1 | 249 |
| Slip Ring Driver | 1 | 30 |
| Azimuth Bearing | 1 | 136 |
| Turntable | 1 | 1147 |
| Slip Ring | 1 | 75 |
| Azimuth Rotary Joint | 1 | 15 |
| | Total Azimuth Assembly Weight = 7728 | |
| Elevation Housing[3] | 1 | 4592 |
| Elevation Bearing Supports | 2 | 207 |
| Elevation Hubs | 2 | 1208 |
| Shock Mounting Blocks | 2 | 372 |
| Shocks | 8 | 56 |
| Elevation Drive Train[2] | 1 | 249 |
| Elevation Bearings | 2 | 272 |
| Torque Tube | 1 | 693 |
| Elevation Rotary Joint | 1 | 15 |
| | Total Elevation Assembly Weight = 7664 | |
| Antenna Supports | 2 | 1774 |
| Counterweight Supports[4] | 2 | 2194 |
| Top Antenna Support | 1 | 179 |
| Counterweights (as required) | | 1914 |
| Rcvr Front End Mtg. Plate | 1 | 35 |
| Antenna | 1 | 2600 |
| Antenna Ladder/Cwt. | 1 | 100 |
| Receiver Front End | 1 | 40 |
| | Total Stanchion Support Weight = 8836 | |
| | | Total Production Weight = 24228 |

– – – – –

1 Less Stanchion Supports and includes Steel Azimuth Bearing Cover
2 Includes Gearbox/Motor/Manual Drive
3 Includes Steel Elevation Bearing Covers and Second Davit Tube
4 Includes Brackets for Adjustable Counterweights

Table 1–5. Radar Data Acquisition Group Capabilities

| Item | Capability |
|---|---|
| Operating PRF | Variable<br>Long: 318–452<br>Short: 318–1304 |
| Radar Range | |
| Reflectivity Data Base<br>Velocity | 1 to 460 km<br>1 to 230 km |
| Radar Volume Coverage | Range = 0 to 460 km<br>Elevation = –1 to +45 degrees<br>Azimuth = 360 degrees |
| Antenna Scan Strategy | |
| Scan Strategy | Time |
| 1) 14 elevation cuts (VCP –11)<br>0.5 to 19.5 degrees in elevation, with no gaps in successive cuts for the lowest 6 degrees in elevation | 5 minutes |
| 2) 9 elevation cuts (VCP–21)<br>0.5 to 19.5 degrees in elevation, with no gaps in successive cuts for the lowest 4 degrees in elevation | 6 minutes |
| 3a) 5 elevation cuts, (VCP–31)<br>0.5 to 4.5 degrees in elevation using long pulses (4.5 μsec) | 10 minutes |
| 3b) 5 elevation cuts, (VCP–32)<br>0.5 to 4.5 degrees in elevation, using short pulses (1.5 μsec) | 10 minutes |

Table 1–6. Radar Data Acquisition Group Characteristics

| Parameter/Feature | Capability/Characteristic |
|---|---|
| Transmitter | |
| Transmit Frequency Range | 2.7 to 3.0 GHz |
| Peak Power Output | 0.65 to 0.75 megawatts |
| Average Power Output | 300 – 1300 Watts |

– – – – –

* There are two models of Waveguide Pressurization Units, HA–4 (single output) and HA4X2 (Dual Output for sites with Spectrum Filter)

** SCIM (Standard cubic inches/minute)

Table 1–6. Radar Data Acquisition Group Characteristics (continued)

| Parameter/Feature | Capability/Characteristic |
|---|---|
| Transmitter | |
| Pulsewidth/Range Sample Interval | 1.57, 4.5 µsec |
| Pulse Repetition Frequency (PRF) | Variable, Long: 318–452,<br>Short: 318–1304 |
| Waveform Types | Contiguous, Batch |
| Klystron Beam Pulsewidth | Long: 6.5 µsec; Short: 2.6 µsec |
| Klystron Beam Duty Factor | .003 (max.) |
| Klystron Beam Average Input | 5.5 kW (max.) |
| Cathode Voltage Regulation | ± .004% pulse–to–pulse at fixed PRF |
| Cathode Voltage Drop | < 1.5% during beam pulse |
| Cathode Voltage Ripple | < 2.0% peak |
| Antenna/Pedestal | |
| Antenna Type | S–Band center–feed parabolic disk |
| Antenna Size | 28.0 ft. O.D. |
| Beamwidth | 0.95° pencil beam |
| Antenna Gain | 45.5 dB |
| Polarization | Circular (RH transmit, LH receive) |
| Sidelobes (with Radome) | < –25 dB |
| Boresight Accuracy | 0.15° |
| Pedestal Type | Elevation over Azimuth |
| Pointing Accuracy | 0.2° rms |
| Read–out Precision | 0.1° rms |
| Max. Acceleration | +15°/sec$^2$ |
| Azimuth Coverage | 360°/continuous |
| Azimuth Rate (max.) | ±36°/sec (6 rpm) |

– – – – –

* There are two models of Waveguide Pressurization Units, HA–4 (single output) and HA4X2 (Dual Output for sites with Spectrum Filter)

** SCIM (Standard cubic inches/minute)

Table 1–6. Radar Data Acquisition Group Characteristics (continued)

| Parameter/Feature | Capability/Characteristic |
|---|---|
| Antenna/Pedestal | |
| Elevation Coverage | Operational: –1° to +45°<br>Test : –1° to +60°<br>Normal Operation: –1° to +20° at one preselected incremental step per rotation. (The selected elevation cuts are mode dependent.) |
| Elevation Rate (max.) | ±30°/sec |
| Receiver | |
| Receiver Operating Band | 2.7 to 3.0 GHz |
| COHO Reference Xtal Oscillator | 57.55 MHz |
| Phase Control | 7 bit digital |
| Accuracy | 0.0005% @ 25°C |
| Temperature Stability | 0.0005% over Temp. Range |
| STALO Output | $f_T$ – 57.55 MHz |
| Synchronizer Clock | 9.6 MHz (derived from COHO) |
| RF Test Source | • Pulse/CW variable in 1 dB increments over receiver dynamic range<br>• Pulse–to–pulse programmable phase modulation |
| Receiver Channel Types (2) | Linear Output I/Q<br>Log Output |
| Dynamic Range | 95 dB |
| System Noise Temperature | 471°K |
| Automatic Gain Control (AGC) Range | 0–42 dB |
| Receiver Noise Figure | 2.9 dB |
| Processors | |
| Signal Processor Types | Hardwired (HSP)/Programmable (PSP) |
| Sample Rate | 2/3 MHz |

– – – – –

* There are two models of Waveguide Pressurization Units, HA–4 (single output) and HA4X2 (Dual Output for sites with Spectrum Filter)

** SCIM (Standard cubic inches/minute)

Table 1–6. Radar Data Acquisition Group Characteristics (continued)

| Parameter/Feature | Capability/Characteristic |
|---|---|
| Processors | |
| Clutter Map/Filter | Hardwired |
| Clutter Cancellation/Suppression | >50 dB |
| A/D Conversion 12 bits/channel | Linear Channel (2) 12 bits/channel Log Channel |
| Filter | 5–pole elliptical |
| Status and Control Processor | |
| Processor | 32–bit and modular building block architecture |
| Processor Memory | 4 Mb Semiconductor Memory |
| Mass Storage | 60 Mb magnetic tape cartridge<br>140 Mb Fixed Disk |
| Ports | |
| Wideband | One (expandable to two) at 1.54 Mbits/sec (DSX–1 Standard) |
| RS–232 Peripheral | 8 (three are used for Antenna Control Unit, DAU, and Maintenance Terminal; in a redundant system an interprocessor channel is also used) |
| Operating System | OS/32 |
| Waveguide Pressurization Unit* | HA4/HA4X2 |
| Output | 5 SCIM**/5 SCIM** |
| Operating Pressure | |
| Dryer System | 35–80 PSIG/38–80 PSIG |
| Storage Tank | 18–40 PSIG/35–60 PSIG |
| Temperature Range | |
| Operating | 10–35°C (50–95°F)/10–35°C (50–95°F) |
| Storage | –35–60°C (–31–140°F)/–35–60°C (–31–140°F) |
| Ambient Humidity | |
| Operating | 20–80% RH/20–80% RH |
| Storage | 15–100% RH/15–100% RH |

– – – – –

* There are two models of Waveguide Pressurization Units, HA–4 (single output) and HA4X2 (Dual Output for sites with Spectrum Filter)

** SCIM (Standard cubic inches/minute)

Table 1-7. Azimuth Rotary Joint UD2A1A4 Electrical Characteristics

| Parameter/Feature | CH #1 (Waveguide) | *CH #2 and #3 (Coax) | **CH #4 and #5 When Used (Coax) |
|---|---|---|---|
| Freq. (GHz) | 2.7 - 3.0 | | |
| Max. VSWR | 1.2 | 1.3 | 1.3 |
| Insertion Loss (dB) | 0.2 | 0.7 | 0.7 |
| WOW[1] (360°) Max | 0.08 | | |
| Peak Power | 0.9 megawatts | 10 Watts | 10 Watts |
| Average Power | 1.8 kW | 10 Watts | 10 Watts |
| Isolation CH #1 to Others | | 70 dB | 70 dB |
| Isolation BTN 2, 3, and 4 (if used) | | 60 dB | 60 dB |
| Input and Output Connectors | Waveguide | Precision Type N (Coax) | Precision Type N (Coax) |

- - - - -

* Channels 2 and 3 carry low power RF for test signal injection and received RF signals.

** Channels 4 and 5 are used only in redundant configuration

1 Difference between maximum and minimum Voltage Standing Wave Ratio (VSWR) over 360° rotation

Table 1-8. Elevation Rotary Joint UD2A1A5 Electrical Characteristics

| Parameter/Feature | CH #1 (Waveguide) |
|---|---|
| Frequency (GHz) | 2.7 - 3.0 |
| Maximum VSWR | 1.2 |
| Insertion Loss (dB) Maximum | 0.2 |
| WOW (360°) Maximum[1] | 0.08 |
| Peak Power | 0.9 MW |
| Average Power | 1.8 kW |

- - - - -

1 Difference between maximum and minimum VSWR over 360° rotation.

# Section 1-2. Equipment Description

## 1-2.1 RADAR DATA ACQUISITION GROUP EQUIPMENT SUPPLIED.

Refer to NWS EHB 6-501, Illustrated Parts Breakdown, for the complete listing of the RDA Group.

## 1-2.2 RDA EQUIPMENT DESCRIPTION.

The following paragraphs describe the main equipment which makes up the RDA Group.

1-2.2.1 Equipment Shelter UD1. The WSR-88D sites have an equipment shelter collocated with the radar antenna tower. The equipment Shelter UD1 houses the Radar Transmitter UD3, Radar Receiver UD4, RDA Data Processor (RDADP) UD5 equipment, Wideband Communications equipment, and for DoD systems, an RPG Processor/Communications Assembly UD70. Refer to Figure 1-3, Sheet 1 for the contents of an NWS shelter or Figure 1-3, Sheet 2 for the contents of a DoD shelter.

The redundant equipment shelter UD1 houses Radar Transmitters UD3 and UD103, Radar Receivers UD4 and UD104, RDADPs UD5 and UD105, Waveguide Pressurization Units UD6 and UD106, and for an FAA redundant system, two RPGs UD70 and UD170, and a Relay Box UD31. See Figure 1-4 for the contents of the FAA shelter and Figure 1-5 for the contents of the NWS shelter.

1-2.2.2 Antenna/Pedestal UD2. The antenna assembly (Figure 1-6) consists of a reflector, feed, and support structure, all mounted on the pedestal and housed in a rigid radome on top of an antenna tower. The maximum total weight of the antenna is 2600 pounds.

1-2.2.2.1 Antenna Reflector. The antenna reflector surface is a paraboloid and has a diameter of 28 feet. The configuration consists of multiple interchangeable pie slice shaped panels surrounding a cylindrical hub stabilized with structural braces.

1-2.2.2.2 Antenna Feed. The antenna feed consists of a horn and an Orthogonal Mode Transducer (OMT). The OMT is located behind the feedhorn. The OMT port is connected via waveguide to the elevation rotary joint.

1-2.2.2.3 Feed Support Structure. The feed support structure consists of three struts which support the feed, and position it with its phase center at the focal point of the parabolic reflector. The feed waveguide is integrated into the support structure. The antenna feed components and waveguide are capable of sustaining pressurization to 5 PSIG and are normally pressurized to 3 PSIG.

1-2.2.2.4 Pedestal Assembly. The pedestal assembly (Figure 1-6) provides support to the antenna assembly and contains the azimuth/elevation drive units and the position measuring data packages. The antenna pedestal also includes the receiver front end which consists of Receiver Protector UD2A3, Bandpass Filter UD2A1A3FL1, and Low Noise Amplifier UD2A4. At redundant sites, the antenna pedestal also includes a second receiver front end for channel 1 which consists of Receiver Protector UD2A7, Bandpass Filter UD2A1A3FL2, and Low Noise Amplifier UD2A8. The pedestal electronics are located in RDADP cabinet UD5 which is located in RDA Equipment Shelter UD1.

1-2.2.2.5 Antenna/Pedestal Drives. The antenna/pedestal drives the antenna continuously in azimuth at a maximum speed of 6 rpm. The pedestal elevation drive assembly permits movement in incremental steps in elevation from minus one degree to plus 60 degrees.

1-2.2.2.6 Radar Pedestal. The radar pedestal is equipped with manual positioning handwheels for both elevation and azimuth. The manual assemblies contain integral pins which are capable of locking the pedestal in multiple positions for maintenance. The pedestal drive units contain electrically interlocked stow pins for elevation and azimuth, and two sets of factory-set electrical limit switches in elevation. There are also mechanical stops in elevation in event of failure of the electrical limit switches.

1-2.2.2.7 Pedestal Disable. A pedestal disable switch is mounted on the pedestal for removal of all drive power from the pedestal during maintenance actions. The pedestal assembly is mounted on a riser. The riser and pedestal contains the sliprings, elevation and azimuth rotary joints, and interface circuitry.

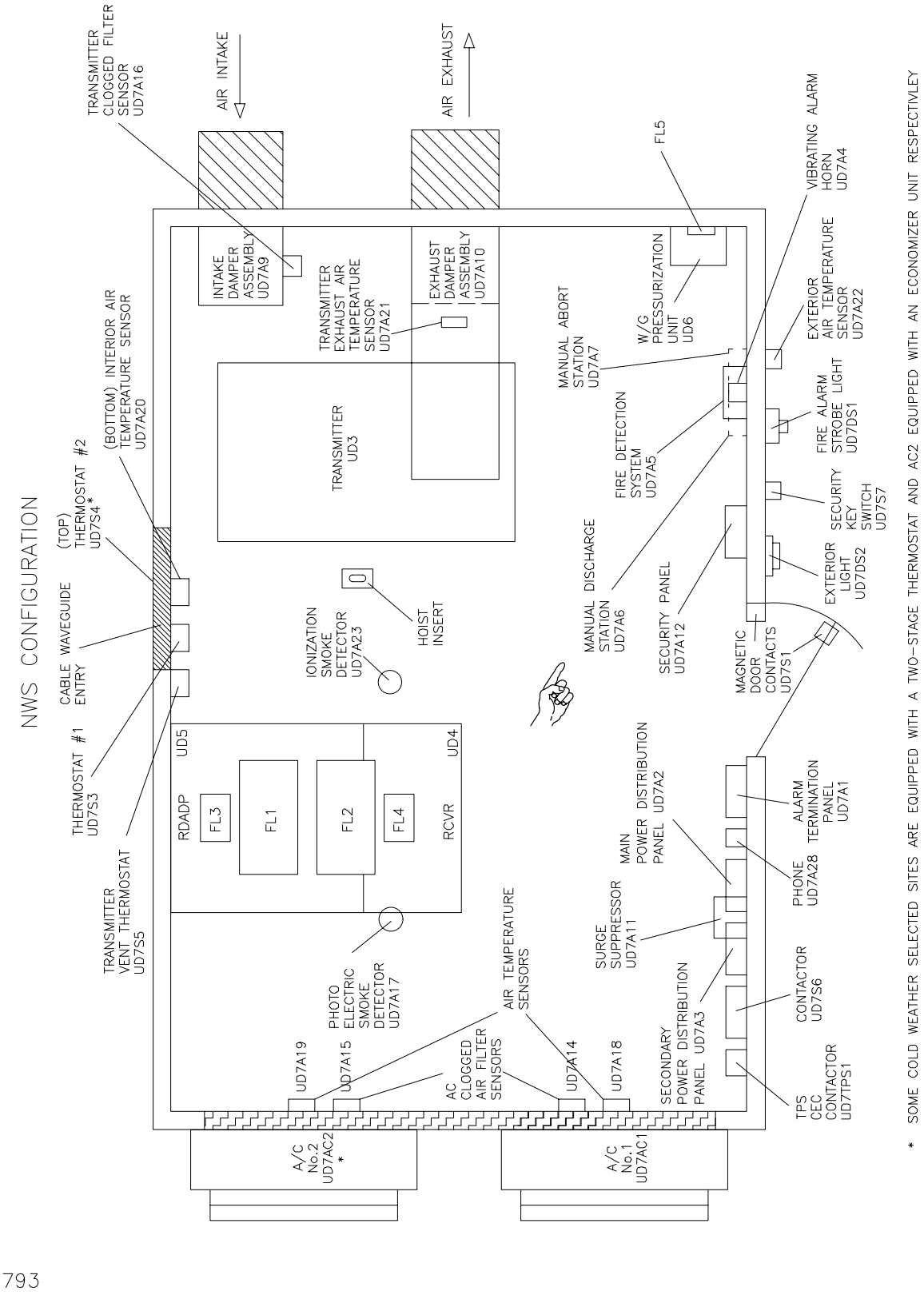


Figure 1–3. Single Channel RDA Electrical Equipment Shelter UD1 Configuration (Sheet 1 of 2)

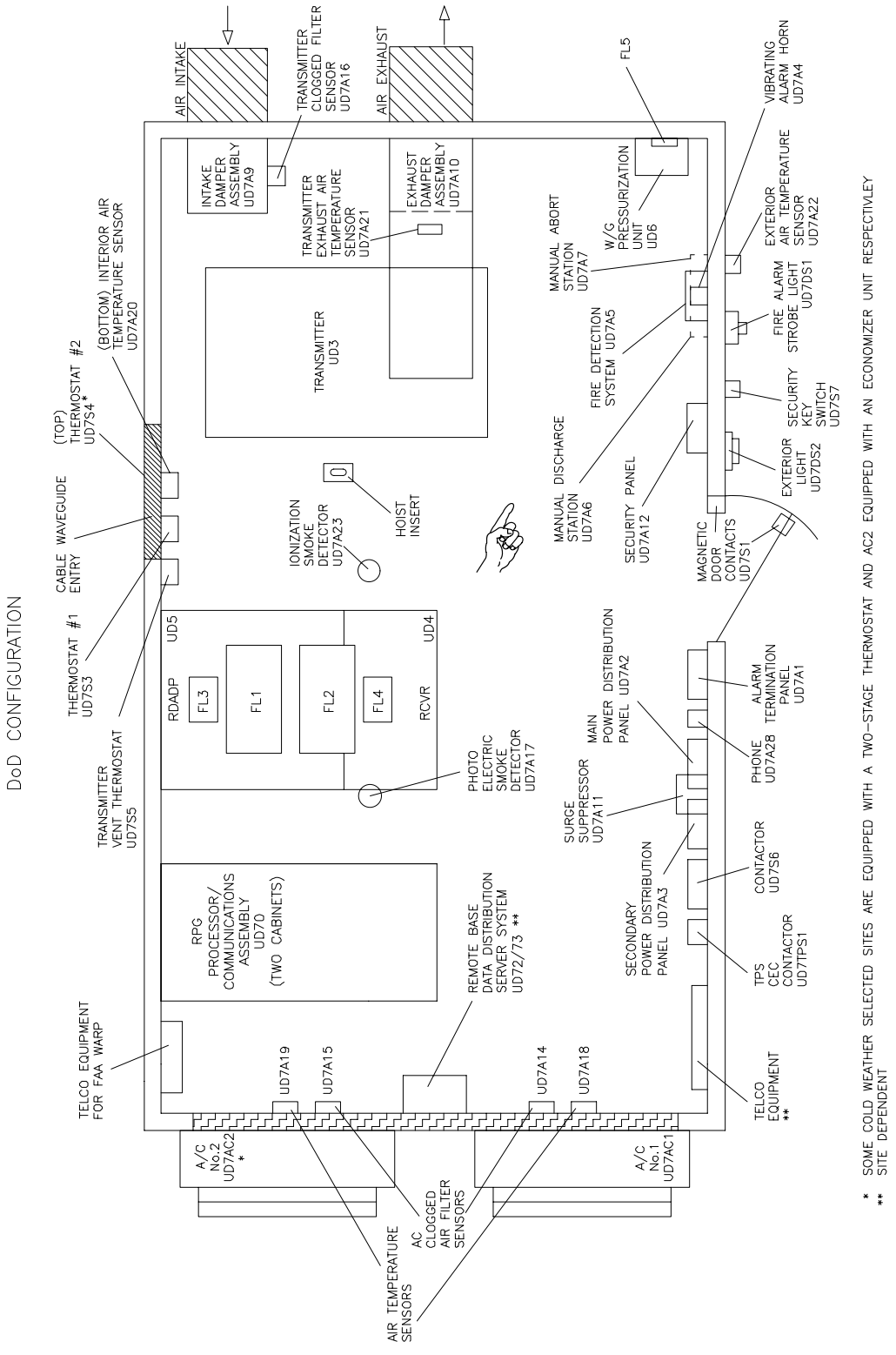


Figure 1–3. Single Channel RDA Electrical Equipment Shelter UD1 Configuration (Sheet 2 of 2)

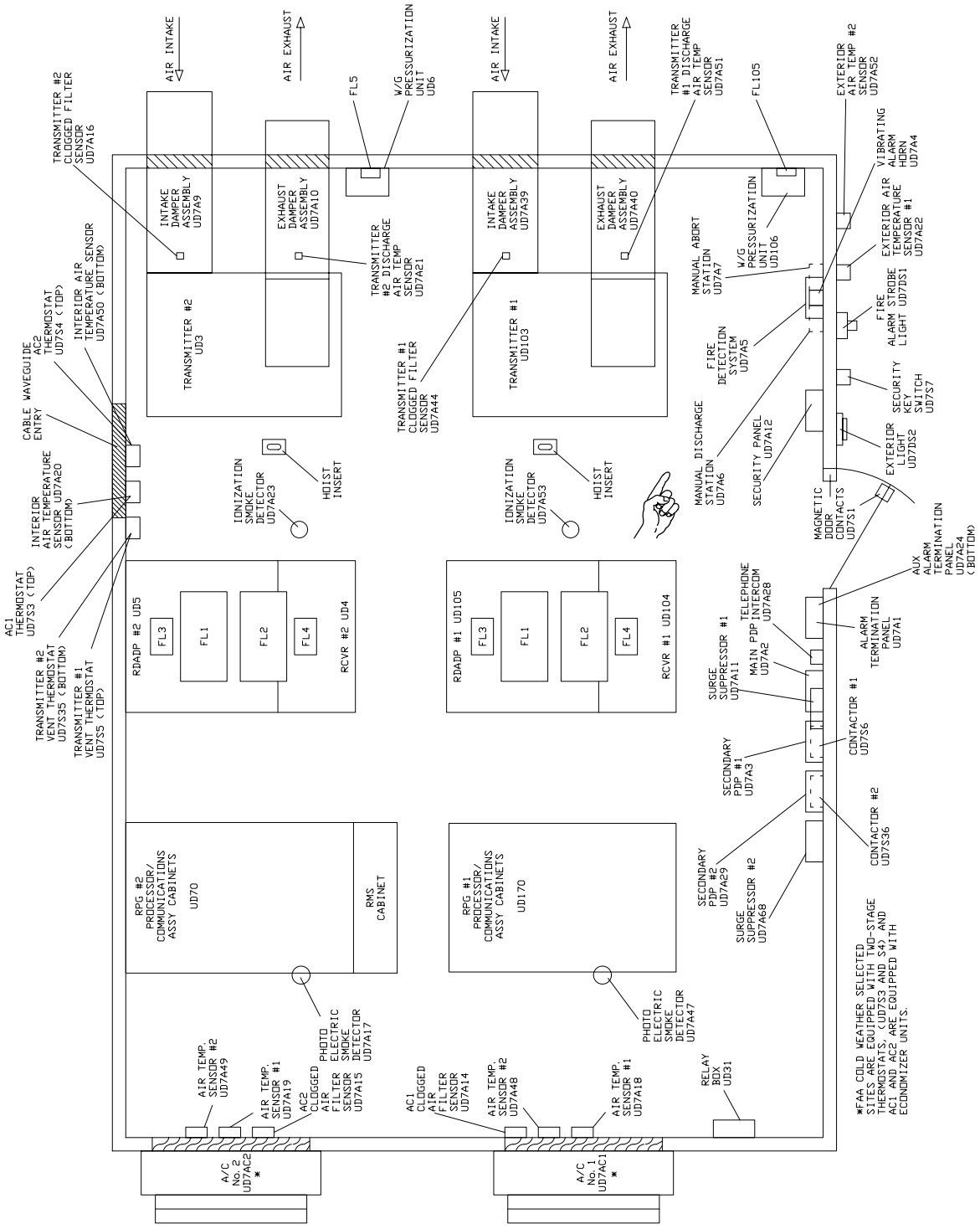


NX1794

Figure 1–4. FAA Redundant RDA Electrical Equipment Shelter UD1 Configuration

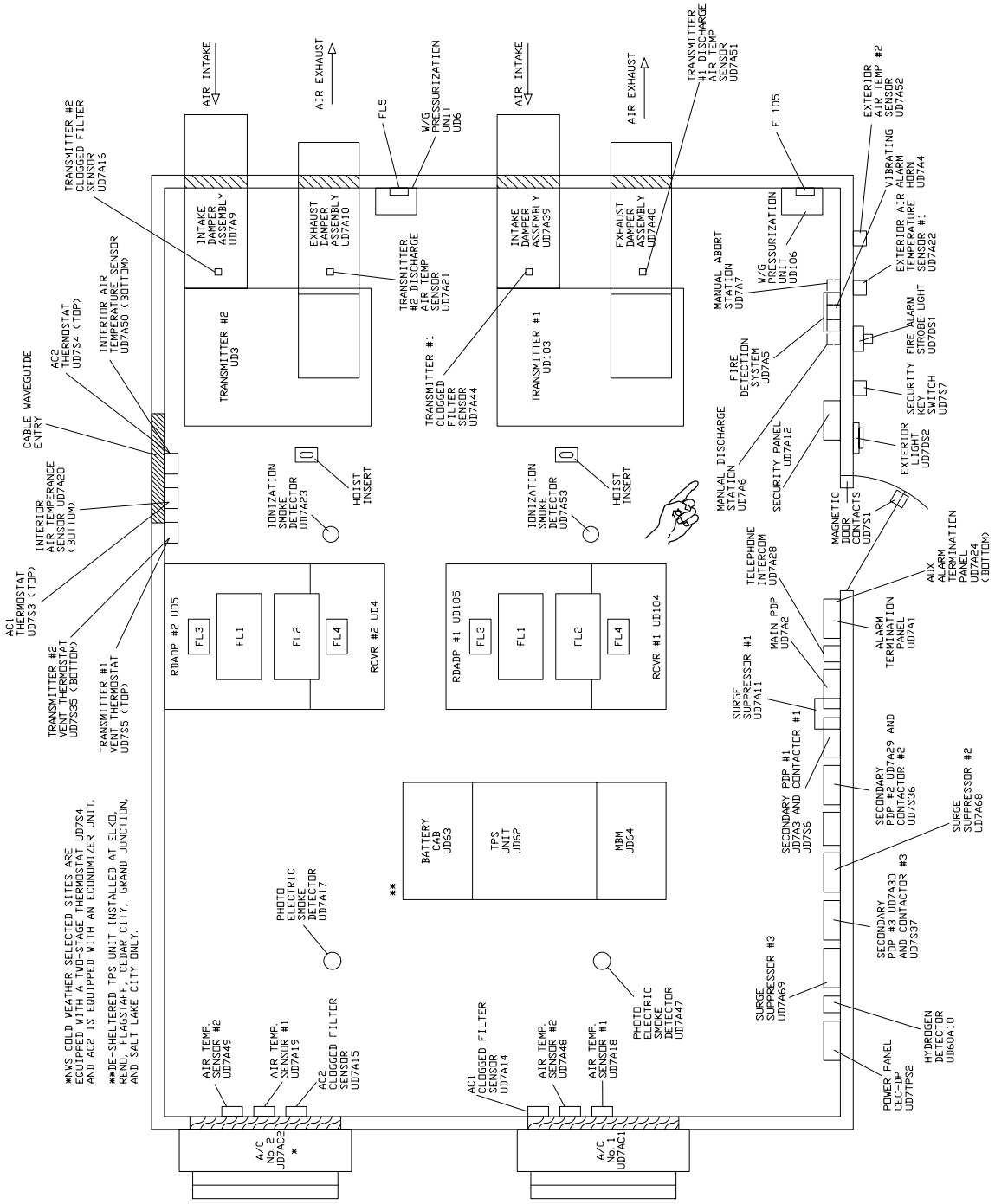


NX1795

Figure 1–5. NWS Redundant RDA Electrical Equipment Shelter UD1 Configuration

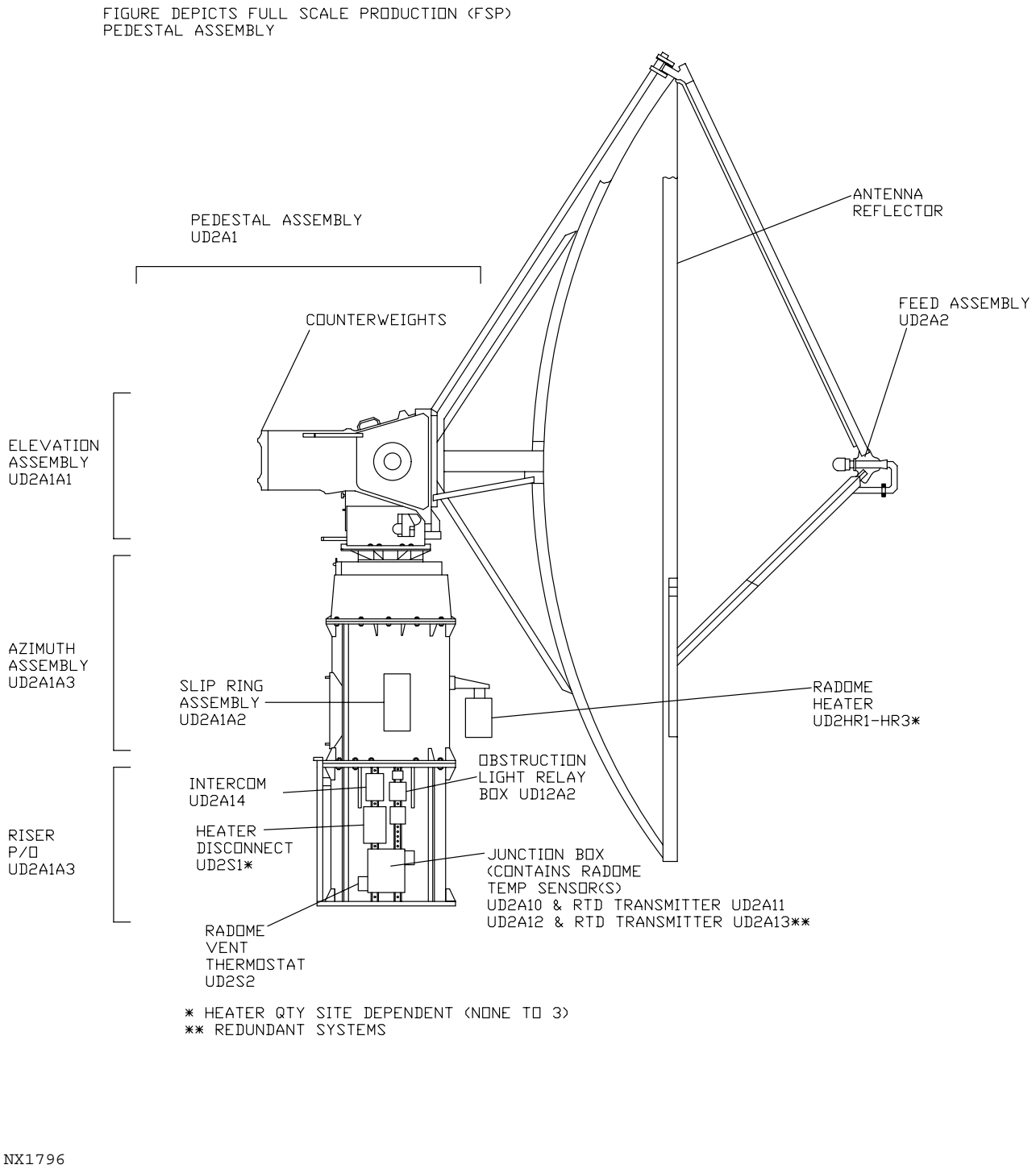


Figure 1-6. Antenna/Pedestal UD2

1-2.2.3 Radar Transmitter UD3. The radar transmitter unit (Figure 1-7) consists of an amplifier/modulator and microwave system which generates and transmits RF power to the antenna pedestal. The equipment is modularized, remotely controllable, and self-monitoring with automatic fault location. The modulator is a controlled-charge, solid state unit employing reverse-blocking thyristors as power switching elements. A transmitter unit fault interlock system consisting of power supply, door interlocks, air pressure interlocks, and air flow interlocks, over temperature sensor, oil level sensor, and oil temperature sensors are provided in the transmitter. The modulator includes overvoltage and overcurrent protective circuitry to prevent damage in the event of an open or short circuited load. Automatic recycling is provided to allow unattended operations. Continuous monitoring via built-in test equipment (BITE) provides a capability for fault isolation which can be accomplished at the RDA maintenance terminal. The transmitter-modulator equipment is housed in a cabinet 80″ high by 30″ deep by 72″ wide. Inlet and outlet ducts are provided at the top of the cabinet.

1-2.2.4 Radar Receiver UD4. The radar receiver (Figure 1-8) is a single bay, EMI-shielded cabinet, housing the receiver components. Front and rear doors provide access to the receiver components. An inner swinging door provides the mounting surface for many of the modules. The remainder are affixed to the cabinet partitions, side walls, and slide-out shelves. The receiver channel comprises the analog signal processing circuits of the radar receiver with the exception of the front end (receiver protector and low-noise amplifier) which is located in the antenna/pedestal.

The receiver channel consists of the following major functional sub-assemblies:

- Pre-Select Bandpass Filter
- Mixer/Pre-Amplifier
- IF Attenuator Assembly
- IF Amplifier/Limiter
- Multiple Output Log Amplifier Detector
- I/Q Phase Detector
- Coaxial Delay Line
- Matched Bandpass Filter
- Interference Detection Unit
- A/D Converter

The standard configuration of the radar receiver also includes the RF generator, receiver channel, RF test source select, and receiver interface. The receiver interface provides the signal interfaces between the receiver and the signal processor while maintaining electrical isolation via opto-isolators. It also provides holding registers for control data to the receiver from the signal processor. Type I archive interface (analog receiver video) port is mounted on the side of the receiver cabinet. In addition I, Q, and log video and trigger ports are provided.

1-2.2.5 RDA Data Processor Cabinet UD5. The RDA Data Processor Cabinet UD5 (Figure 1-9) provides for local control of the RDA during maintenance, forms and transmits RDA data to the RPG, determines RDA status, and performs monitoring functions. The right bay of the RDA data processor cabinet consists of the RDASC processor, the hardwired signal processor (HSP), the programmable signal processor (PSP), and associated power supplies. The left bay contains the RDASC processor control panel, RDA maintenance panel, channel service unit (CSU), data acquisition unit (DAU), RDA maintenance terminal with keyboard, small computer system

interface (SCSI) with tape and disk drives, pedestal digital control unit (PDCU), pedestal power amplifier unit (PPAU), and a 28V power supply. Type II archiving interfaces (digital base data) is also located in UD5. The Type II archive receives and stores digital base data. It can also store antenna position data, RDA maintenance terminal data, and DAU discrete status data.

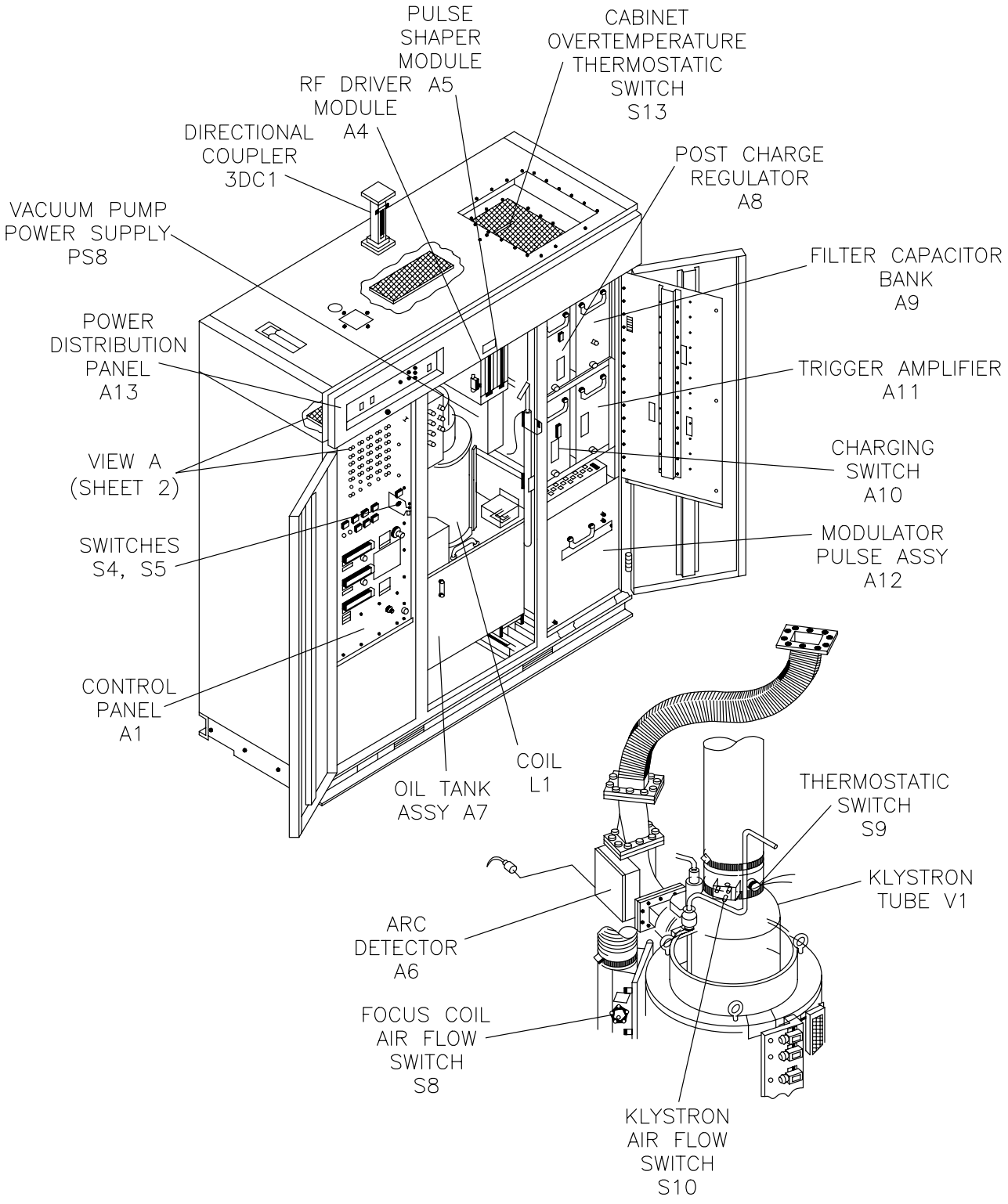


Figure 1-7. Radar Transmitter UD3 (Sheet 1 of 2)

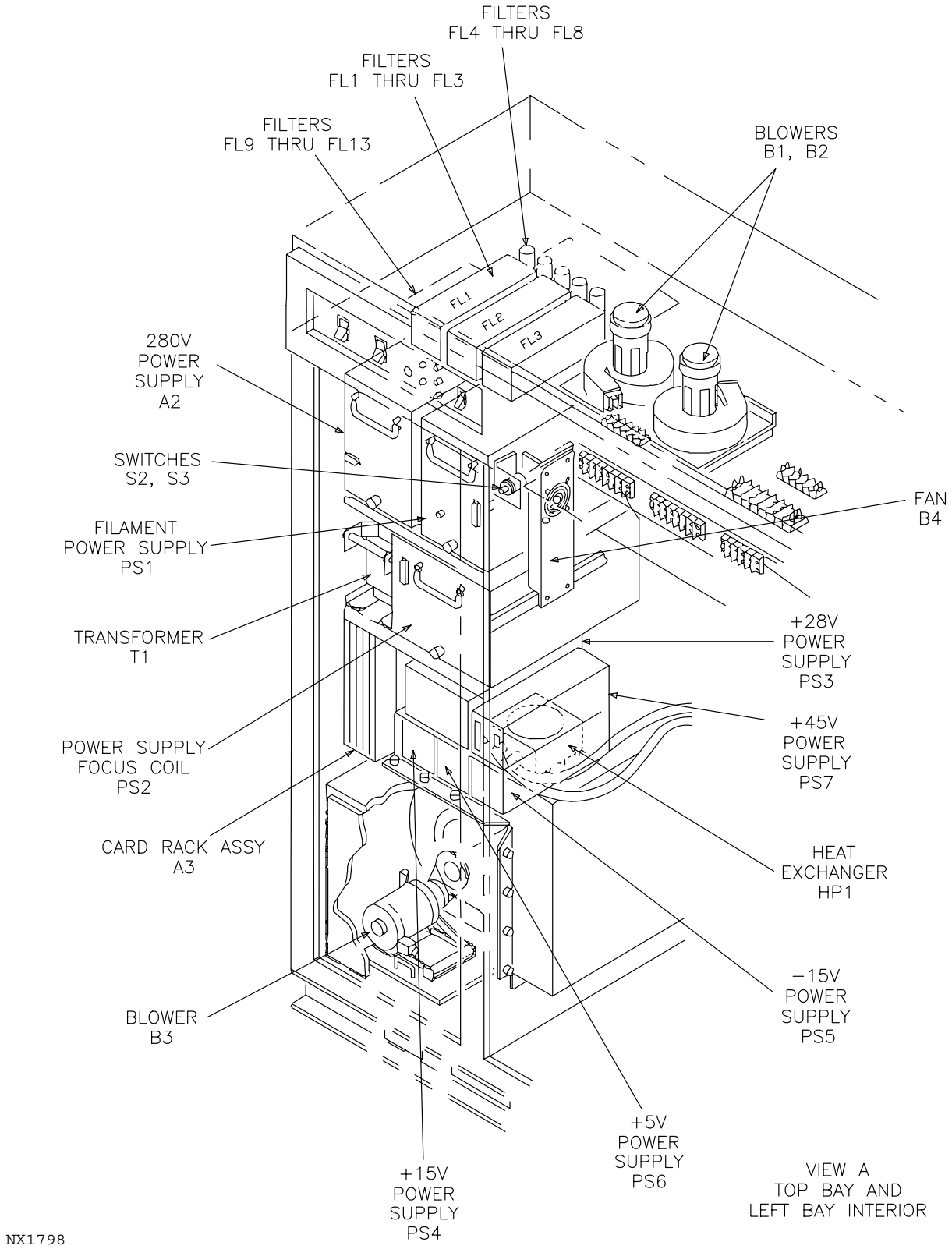


Figure 1-7. Radar Transmitter UD3 (Sheet 2 of 2)

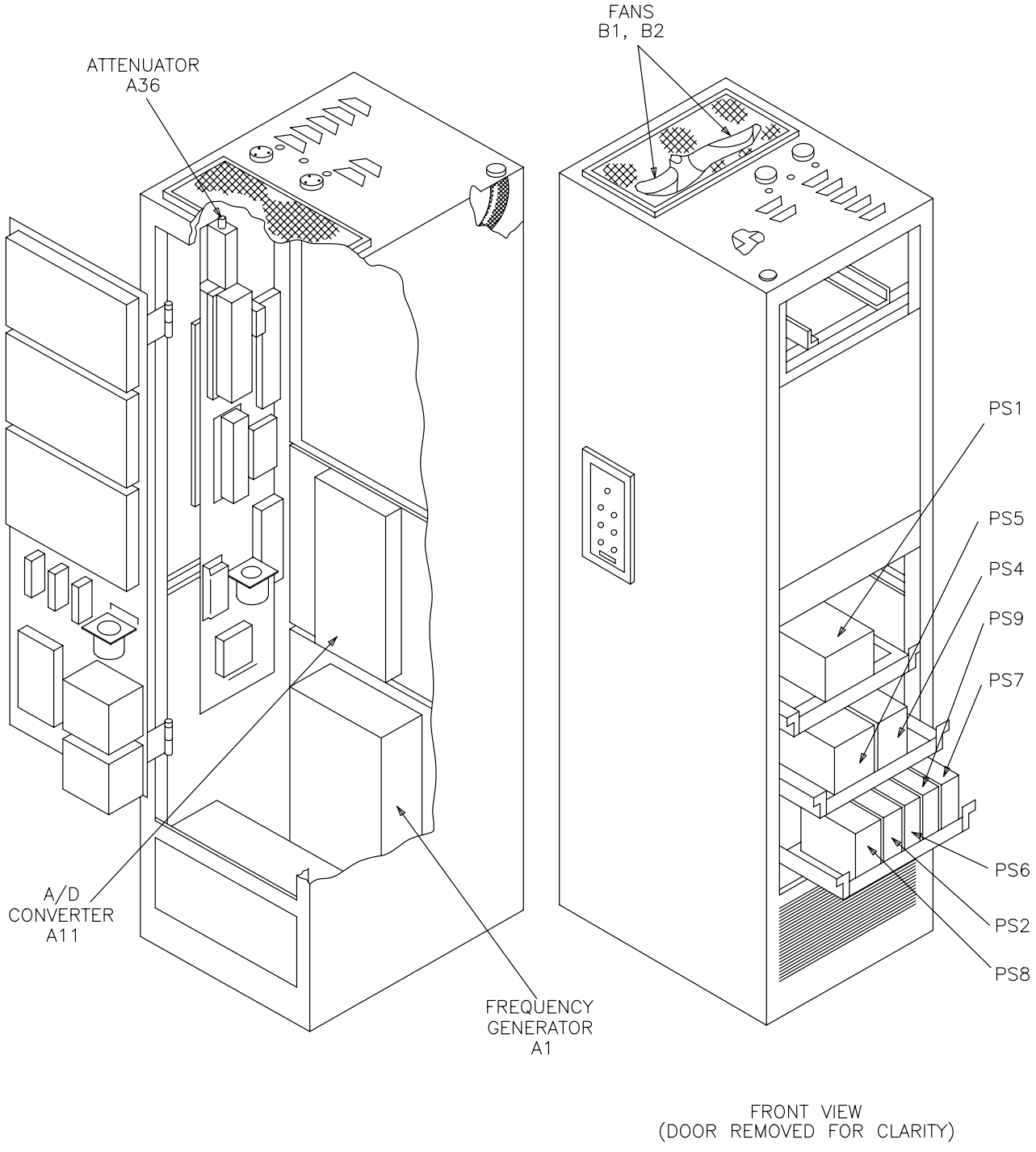


Figure 1-8. Radar Receiver UD4

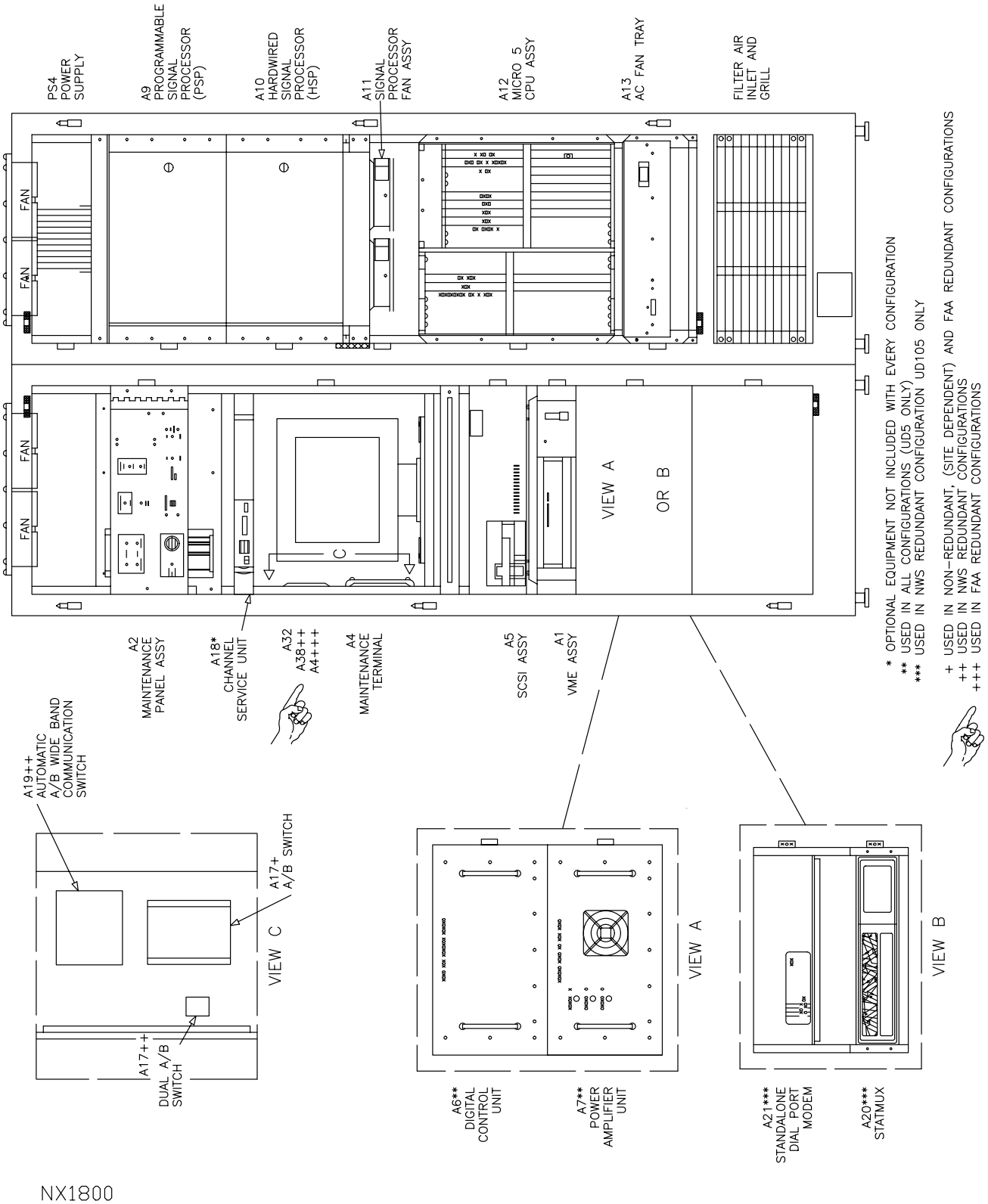


Figure 1-9. RDA Data Processor Cabinet UD5 Front View (Sheet 1 of 2)

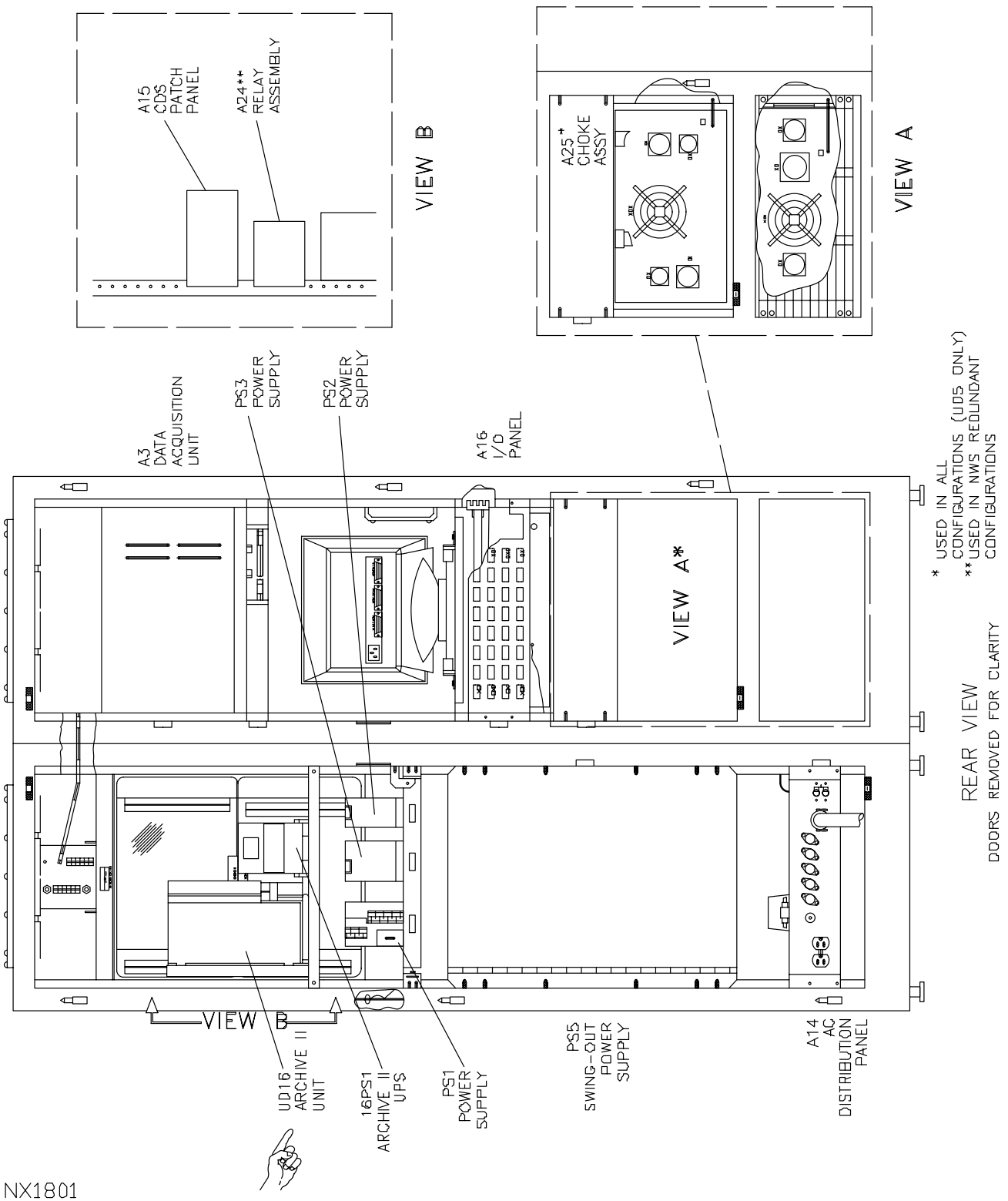


Figure 1-9. RDA Data Processor Cabinet UD5 Rear View (Sheet 2 of 2)

1-2.2.5.1 FAA and NWS Redundant RDADP Cabinets UD5 and UD105. The RDADP Cabinets UD5 and UD105 provide for local control of the RDADP during maintenance, forms and transmits RDA data to the RPG, determines RDA status, and performs monitoring functions. The following paragraphs provide a description of the UD5 and UD105 cabinets for the FAA Redundant and NWS Redundant sites. Type II archiving interfaces (digital base data) are also located in UD5. The Type II archive unit receives and stores digital base data. It can also store antenna position data, RDA maintenance terminal data, and DAU discrete status data.

Both RDA Data Processor Cabinets UD5 and UD105 consist of the Versa Modular Eurocard (VME) Assembly A1, Maintenance Panel Assembly A2, Data Acquisition Unit (DAU) A3, Alphanumeric Terminal A4, Small Computer System Interface (SCSI) Assembly A5, Programmable Signal Processor (PSP) A9, Hardwired Signal Processor (HSP) A10, Signal Processor Fan Assembly A11, RDASC Processor A12, AC Fan Tray A13, I/O Panel A16, A/B Switch A17, and Power Supplies PS1 through PS5.

1-2.2.5.1.1 FAA Specific. The FAA RDADP Cabinet UD5 also contains the Digital Control Unit (DCU) A6, Power Amplifier Unit A7, and Choke Assembly A25. The DAU (UD5A3 and UD105A3) makes the connection between the pedestal, control and amplification equipment, and either RDASC Processor (UD5A12 or UD105A12). RDADP and VME power supply data is supplied to the remote monitoring subsystem (RMS).

Both FAA RDADP Cabinets (UD5 and UD105) contain an A/B Switch (UD5A17 and UD105A17). When in the B position, the switch connects the RDA Maintenance Terminal (UD5A4 and UD105A4) and the RDASC System Console port (UD5A12 and UD105A12). With the installation of UD70/170 RPG, the A position is no longer needed.

1-2.2.5.1.2 NWS Specific. The NWS RDADP Cabinet UD5 also contains an Automatic A/B Wideband Communication Switch A19, Channel Service Unit (CSU) A18, DCU A6, Power Amplifier Unit A7, and Choke Assembly A25.

The Automatic A/B Wideband Communication Switch A19 connects the RPGPCA wideband port (via CSU UD70A18 and RDA/RPG Gateway UD70A12) to either RDASC processor wideband port (UD5A1 or UD105A1).

The CSU UD5A18 converts the format of the wideband data from the Automatic A/B Wideband Communication Switch and sends it to the RPG which is located remotely from the equipment shelter.

The NWS RDADP Cabinet UD105 contains a Dial Port Modem A21 and a Statistical Multiplexer (STATMUX) A20. The standalone dedicated modem and STATMUX facilitate communication with the remote RDA maintenance console.

Both RDADP Cabinets (UD5 and UD105) contain a Dual A/B Switch A17 and a Relay Assembly A24. The Dual A/B Switch, when in the A position, connects the RDA Maintenance Terminal and both RDASC processor system console and application terminal ports (UD5A12 and UD105A12). When in the B position, the switch connects both RDASC processor system and application ports to the RDA Maintenance Console (UD32) located with the remote MSCF workstation. Also, when in the B position, the outputs from both Dual A/B Switches (UD5A17 and UD105A17) are connected

to a STATMUX (UD105A20). The Relay Assembly (UD5A24 and UD105A24) disconnects power from the equipment when it is commanded.

1-2.2.5.2 Data Acquisition. The Data Acquisition Unit gathers status data from the transmitter, tower/utilities, and power supplies for transmission to the RDASC processor. It also receives information from the processor to drive lamps on the maintenance panel and generates commands to other units.

1-2.2.5.3 RDADP. The RDADP is designed for unattended operation and is normally unattended. It operates using commercial power but is able to switch automatically to a backup power source if necessary.

1-2.2.5.4 Internal Interfaces. Internal interfaces are provided between the RDASC processor and a disk drive subsystem, the wideband communications, and the RDA maintenance terminal. External interfaces are provided to the tower/utilities, transmitter, receiver, antenna/pedestal, and Archive II.

1-2.2.5.5 RDA Maintenance Terminal. The RDA maintenance terminal provides the operator-machine interface to the RDASC processor to allow monitoring, initiating test of the RDA, startup, initializing the processor, and loading the tape to disk as required. The maintenance terminals system console can also be configured as the RPG system console via an A/B Switch UD5A17. This capability is only present in the RPG/RDA collocated configuration and the FAA redundant configuration. The NWS redundant system RDADP have Dual A/B switches (UD5A17 and UD105A17) which allow a Remote RDA Maintenance Console UD33 access to perform the same functions available to the (local) RDA maintenance terminal. The RDASC processor also interfaces with the maintenance panel to control, monitor, and display various functions used during maintenance.

1-2.2.5.6 Signal Processor. The signal processor includes the Hardwired Signal Processor (HSP) UD5/105A10, a programmable processing element identified as the Programmable Signal Processor (PSP) UD5/105A9, and the necessary supporting logic which is used for timing, control, and fault localization. The signal processor processes radar receiver outputs and sends processed data to the RDASC processor. The tasks performed by the hardwired signal processor logic includes ground clutter filtering, synchronization, and control interface functions. The radar interface with the PSP consists of a parallel data bus which connects to a programmable signal processor interface (PSPI) device controller in the RDASC processor which in turn connects to the direct memory access bus of the processor through a selector channel control. The PSP consists of four major functional areas, listed as follows:

- Input Signal Conditioner (ISC)
- Arithmetic Control Unit (ACU)
- Four Arithmetic Units (AUs)
- Input/Output Controller (IOC)

The signal processor, like the receiver, is modularly designed and constructed so that repair can be achieved by replacement of modules.

1-2.2.5.7 Channel Service Unit (CSU). The CSU with its AC/DC power supply is installed in the RDA cabinet and is part of the wideband communications (WBC). The CSU is used in the "Private T1" links where the distance between the RDA and RPG is more than 400 feet but less than 3000 feet and/or in separate buildings. The same CSU is used when leased telephone company (TELCO) T1 lines are used as the wideband transmission medium. The CSU is used in UD5 of single channel and NWS redundant configurations. The CSU is not used in FAA redundant configurations.

1-2.2.5.8 Automatic A/B Wideband Communication Switch. This communication switch (UD5A19) is only used in NWS redundant configurations and is located in the Channel 2 RDADP Cabinet UD5. It is controlled by a signal it receives from the DAU (UD5A3). The switch makes the connection from the RPGDP through the CSU to either RDADP (UD5 or UD105).

1-2.2.6 Waveguide Pressurization Unit UD6. The Waveguide Pressurization Unit UD6 (Figure 1-10) consists of a compressor and pressure tank with supporting controls and valves. It is capable of producing very dry air at an output rate of 5 SCIM (standard cubic inches per minute) at a pressure of 5 PSIG (pounds per square inch gauge). It is a lightweight unit (58 lbs.) designed for wall mounting and is used to keep the waveguide components internally dry. The unit is equipped with a solid state humidity alarm system.

1-2.2.7 Electrical Equipment Shelter UD7. The Electrical Equipment Shelter UD7 is the designation of the shelter that houses the RDA RPIE such as air conditioners, thermostats, lighting, ionization detectors, smoke detectors, sensors, etc. Refer to NWS EHB 6-550, Maintenance Instructions, RPIE Group (for single channel systems), or NWS EHB 6-553, Maintenance Instructions, RPIE Group for Redundant Systems, and NWS EHB 6-501, Illustrated Parts Breakdown (IPB) manual, for a detailed listing of RPIE equipment installed in the shelter.

1-2.2.8 RDA Generator Shelter UD10. The RDA Group has a back-up generator (Onan or Kohler) associated with it. The generator is driven by a diesel engine which turns on automatically upon loss of primary power. It also turns off automatically when power returns. Transfer of the load (RDA equipment) from primary to backup or from backup to primary is handled automatically. Refer to Figure 1-11 for the generator shelter layout.

1-2.2.9 Steel Tower UD11. The steel tower, used to give height (dependent on local terrain) to the location of the radar antenna, can vary in height up to a maximum of 98 feet (30 meters). Refer to Figure 1-12 for the steel tower layout.

1-2.2.10 Radome UD12. The radar radome houses Antenna/Pedestal UD2 and waveguide. It is approximately 39 feet in diameter and is located on top of Steel Tower UD11. Refer to Figure 1-13 for typical radome layout.

1-2.2.11 Microwave Line Of Sight (MLOS) Cabinet UD19/UD39. These cabinets house the MLOS transceivers required when the wideband communications link is performed via MLOS. Refer to NWS EHB 6-545 for location.

1-2.2.12 Transition Power Maintenance Shelter UD60. The transition power maintenance shelter (TPMS) houses the transition power source (TPS) which receives power from either the utility power source or the site engine generator (E/G). The output of the TPS is then supplied to the

critical load contactor(s) in the RDA Shelter. In the event of loss of utility power, the TPS will continue to supply power to the contactor for 9 minutes at full load. Refer to Figure 1-14 for TPMS layout.

1-2.3 RDA INTERFACES.

The RDA operator-machine interface device is a dual port alphanumeric display terminal consisting of a keyboard and monochrome cathode ray tube (CRT) monitor. This terminal is called the RDA maintenance terminal, and is located in the left bay of the RDADP Cabinet UD5. (Refer to Figure 1-9 for location.) The dual port terminal has the capability of interfacing with the RDASC processor in either of two modes: system console mode or applications terminal mode. When interfacing with the processor operating system (OS/32), the terminal is referred to as a system console and provides the following off-line capabilities:

- System initialization and startup
- Control of tape/disk operations
- Loading and execution of processor diagnostic programs and the RDA System Operability Test (RDASOT) program
- Start and stop system application software (operating programs)

When interfacing with the RDA application software (CPCI01), the terminal functions in the application terminal mode. The application terminal mode is used by maintenance technicians to perform RDA operations in local control mode and to monitor system status during on-line maintenance activities. In the procedures contained in this manual it is important to observe the distinction between system console procedures and applications terminal procedures. This is because there are differences with regard to command formats and function keys which depend on the terminal mode. For clarity and convenience, the maintenance terminal will be referred to as the system console when system console mode is required, and as the applications terminal when applications terminal mode is required.

For FAA sites, the RDA system console and interfacing with the application software is also accessible via the FAA RMS.

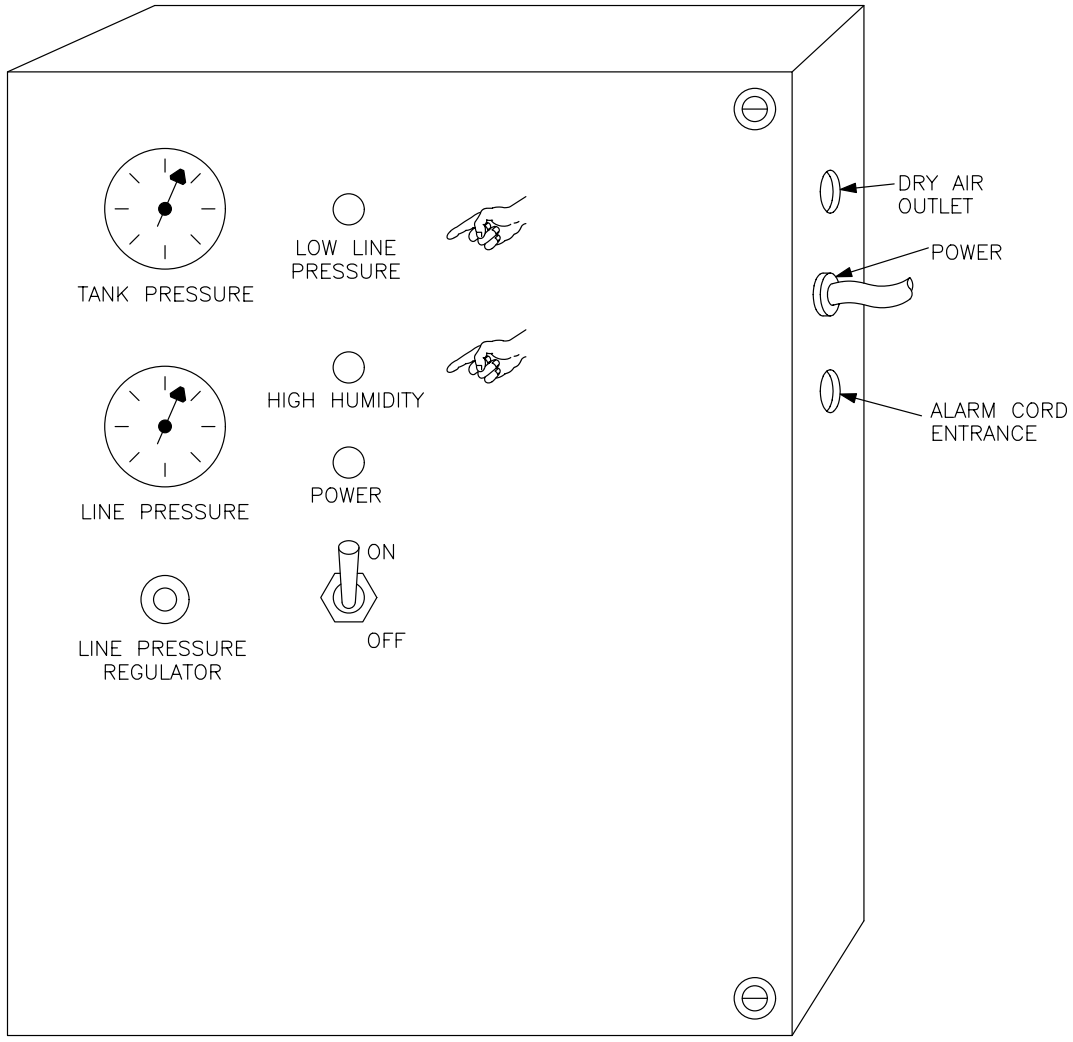


NX1802

Figure 1-10. Waveguide Pressurization Unit UD6

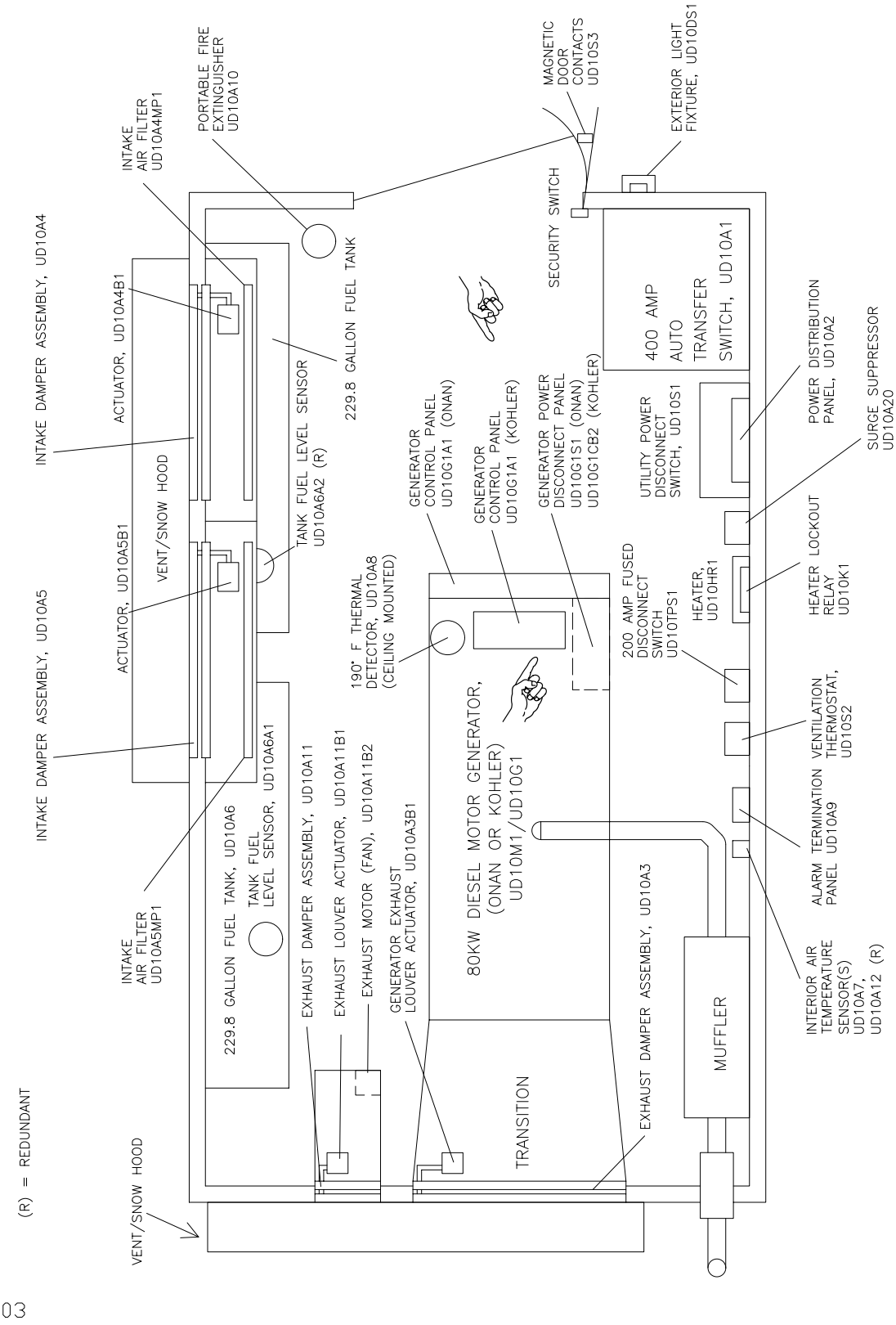


Figure 1-11. Generator Shelter Layout

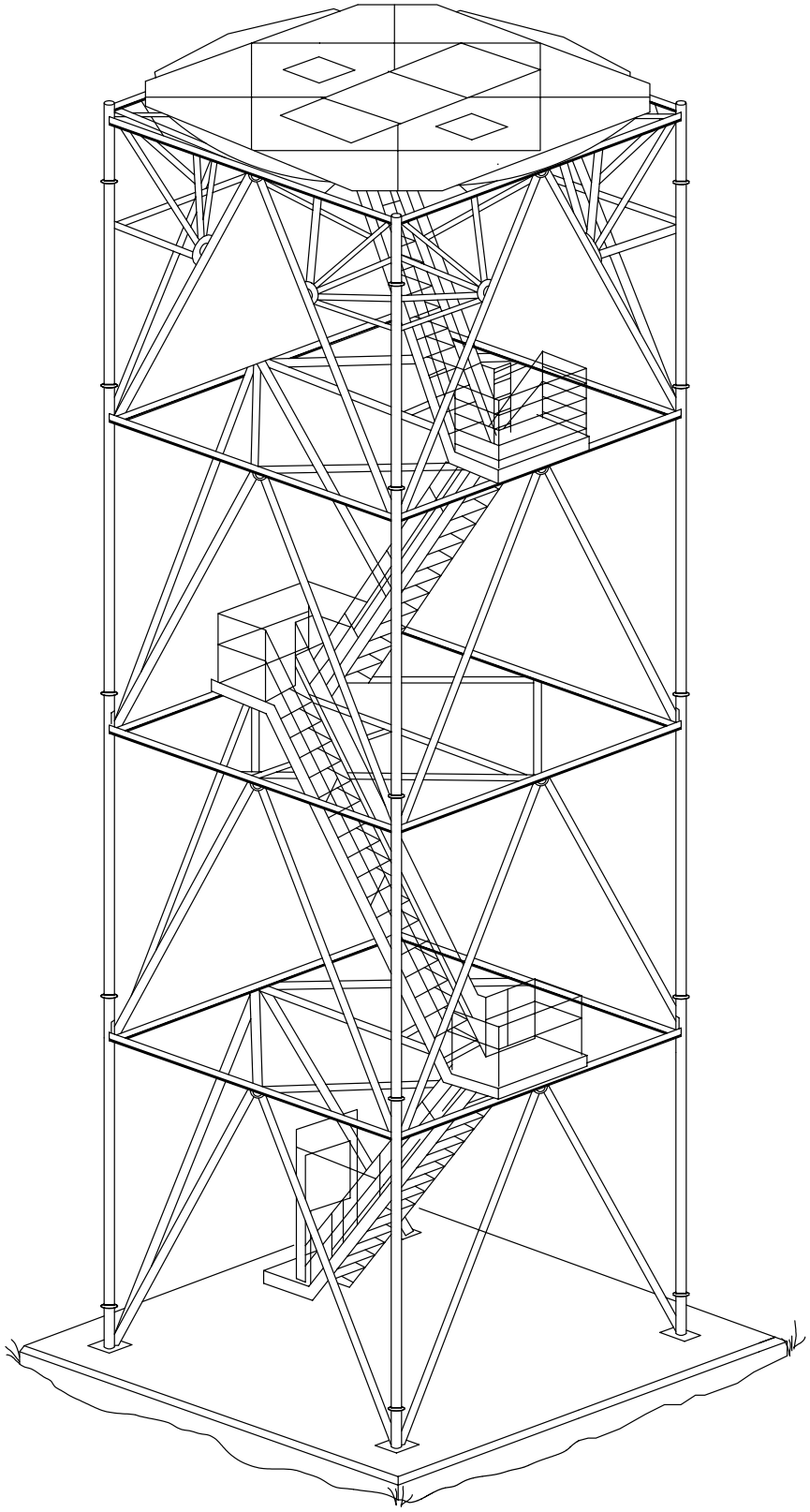

NX1804

Figure 1-12. Steel Tower UD11

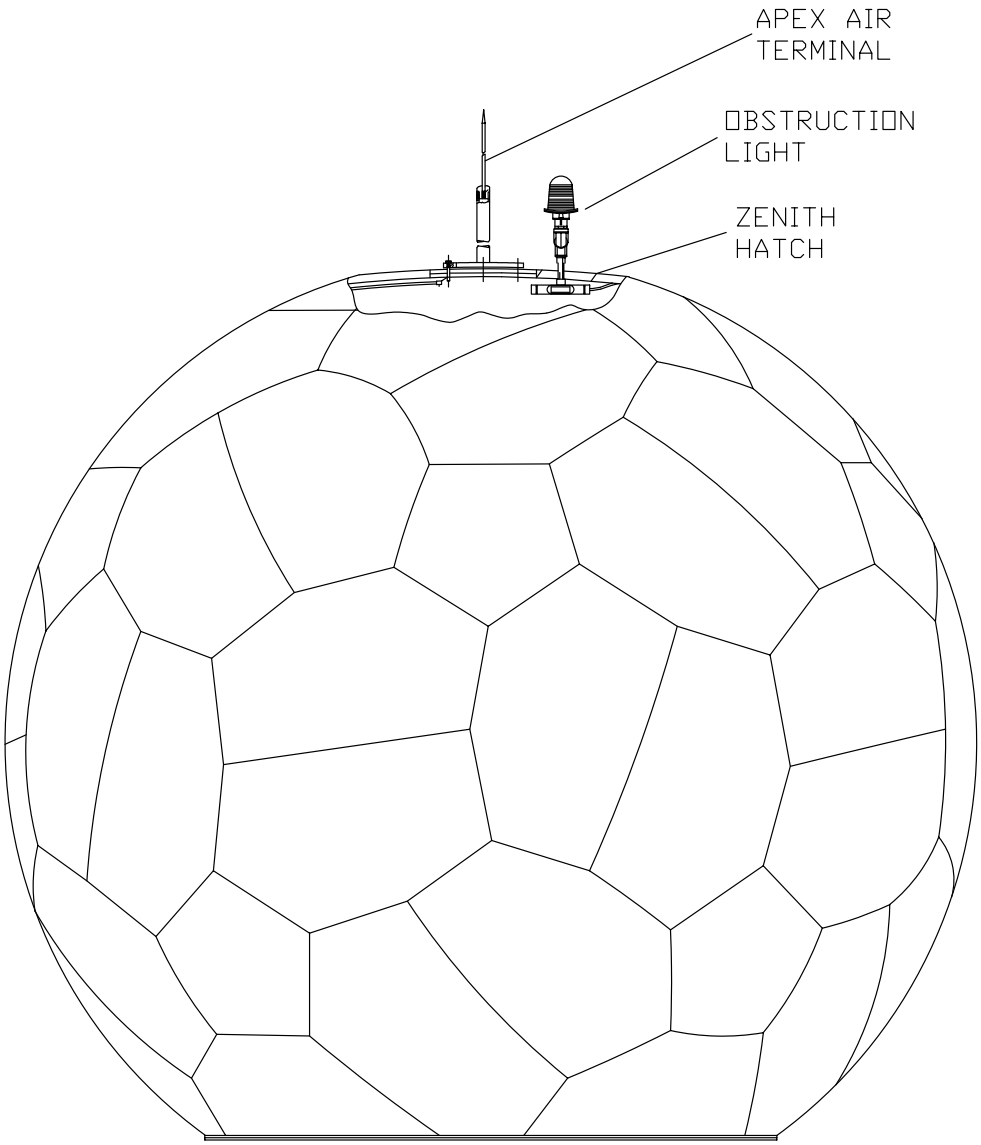


NX1805

Figure 1-13. Radome UD12 (Sheet 1 of 2)

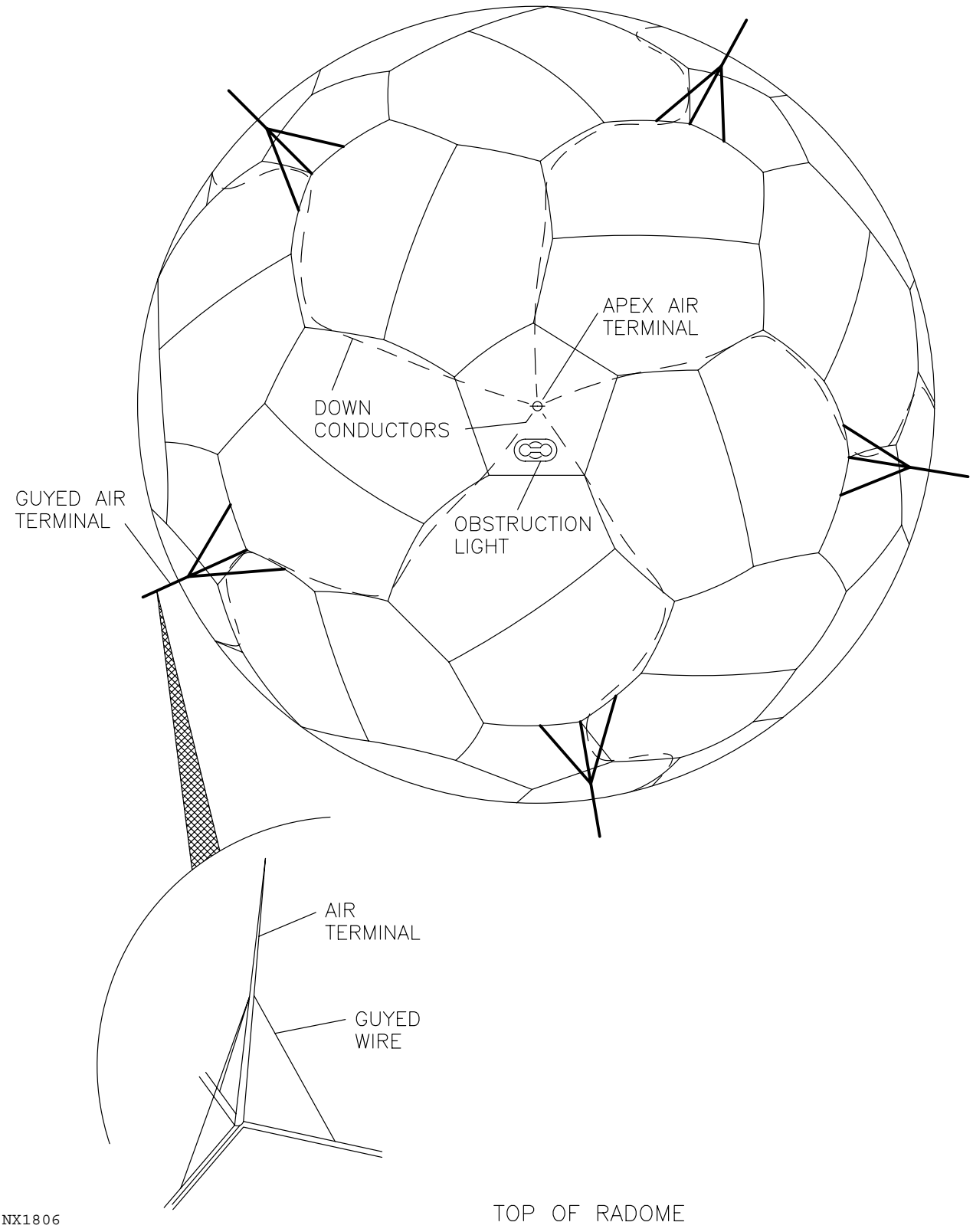


Figure 1-13. Radome UD12 (Sheet 2 of 2)

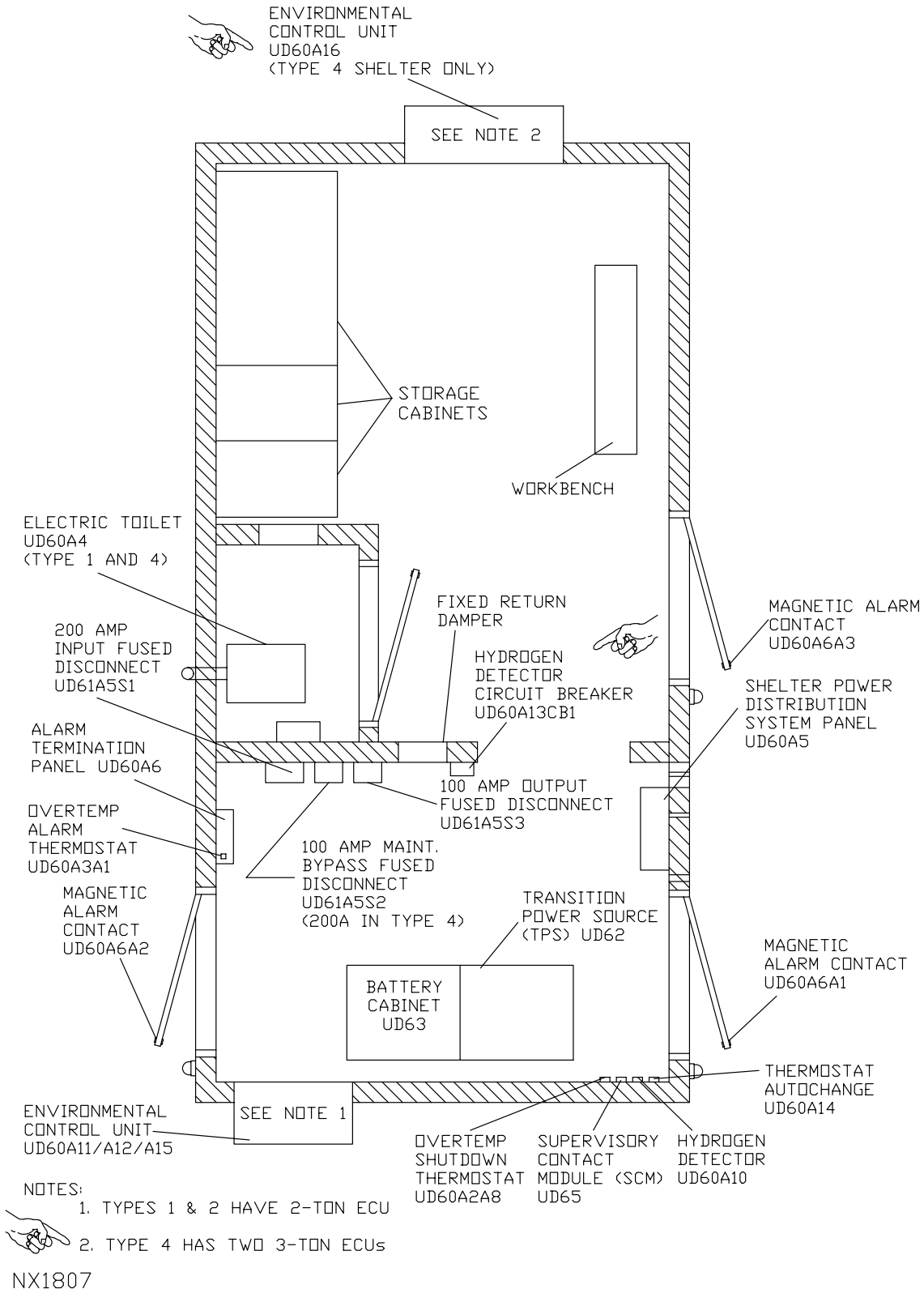


Figure 1-14. Transition Power Maintenance Shelter Layout
(Type 1, 2, and 4) (Sheet 1 of 3)

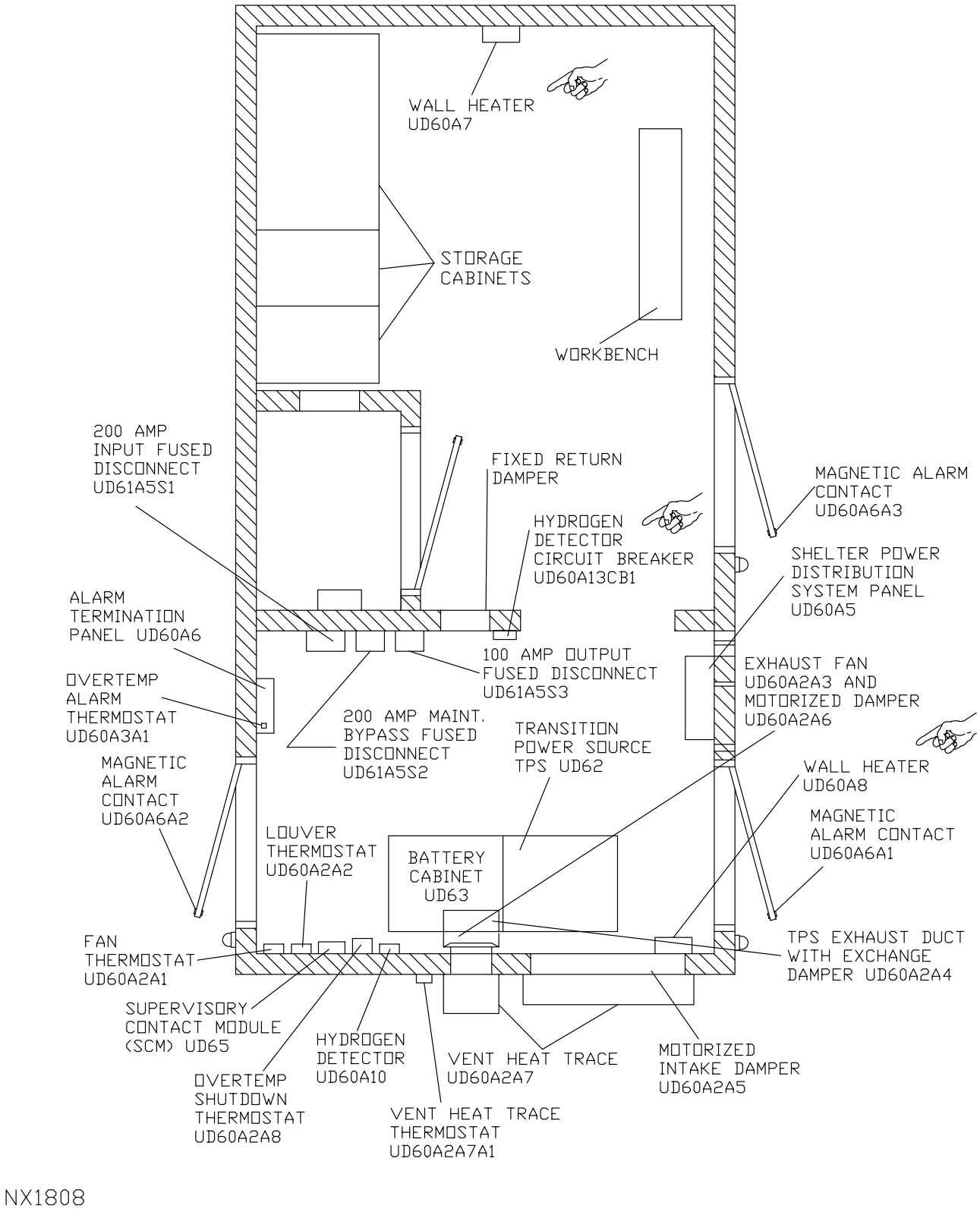


Figure 1-14. Transition Power Maintenance Shelter Layout
Type 3 (Sheet 2 of 3)

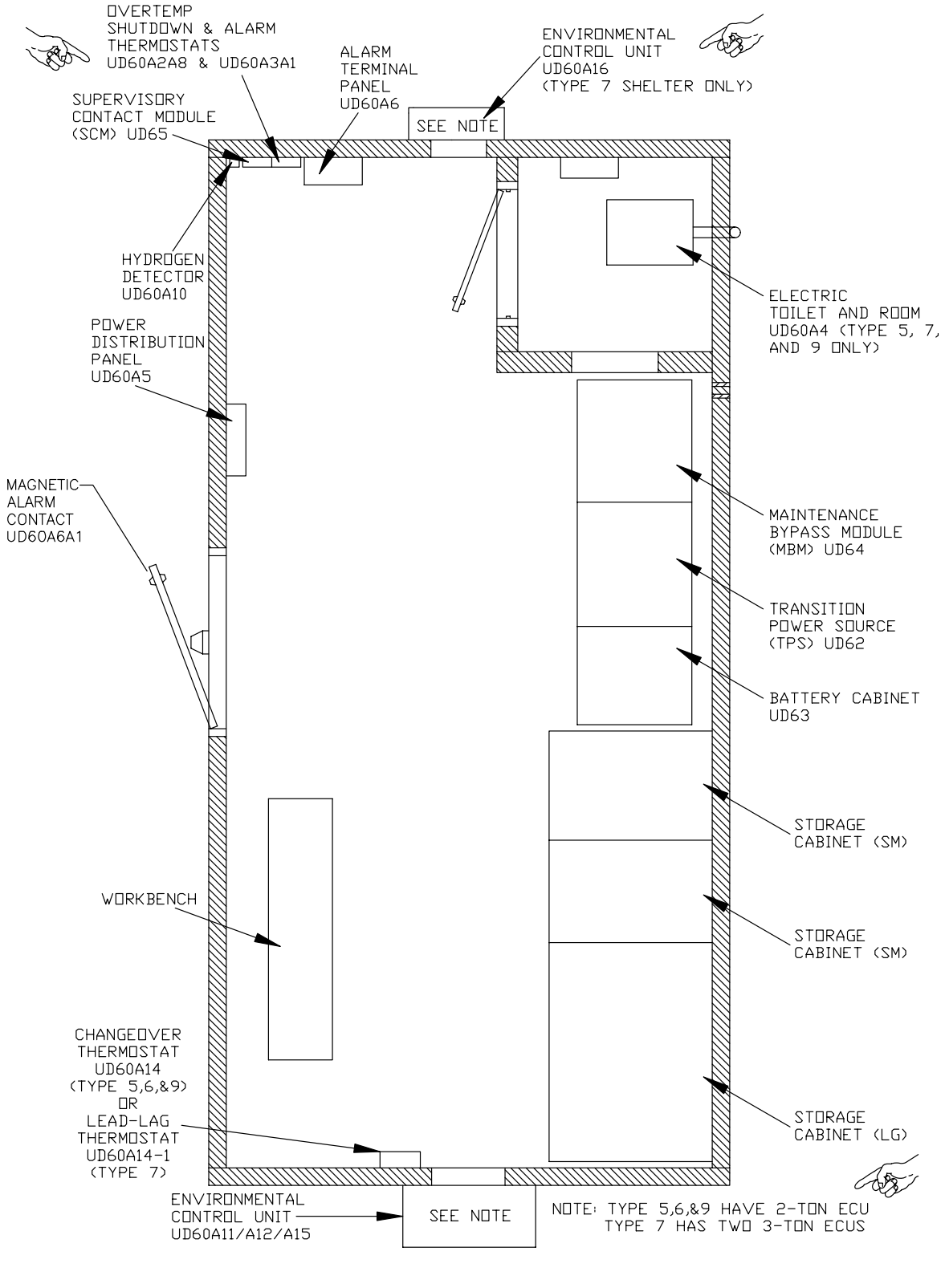


Figure 1-14. Transition Power Maintenance Shelter Layout
(Type 5, 6, 7, and 9) (Sheet 3 of 3)

# Section 1-3. Software Description

## 1-3.1 RADAR DATA ACQUISITION GROUP SOFTWARE.

The operational software is executed in the processing equipment associated with the RDA functional area to accomplish all operational requirements. The program software controls and monitors the operational equipment and permits operator/machine interfacing actions. The Computer Program Configuration Items (CPCIs) identify computer software programs unique to the WSR-88D system. These computer software programs consist of operating system software, application software, and diagnostic or test software programs. The RDA operational software programs consist of the following:

- Operating System (OS/32) CPCI 10
- RDA Status and Control Software Program CPCI 01
- RDA Signal Processing Software Program CPCI 02
- RDA System Operational Test CPCI 06
- Data Processing Diagnostics CPCI 07

## 1-3.2 OPERATING SYSTEM SOFTWARE PROGRAM (OS/32) CPCI 10.

The operating system (OS/32) is CPCI 10. CPCI 10 produces system initialization and operation. It performs all real-time operating system functions, manages system environment, provides file management services, coordinates input/output requests for local devices or telecommunication facilities, schedules tasks, allocates memory, and handles interrupt/fault conditions. The OS/32 software program interfaces with the RDASC program CPCI 01 in the RDASC Data Processor.

## 1-3.3 RDA STATUS AND CONTROL SOFTWARE PROGRAM CPCI 01.

CPCI 01 is used to control real-time operation of the RDA Group equipment. It monitors and assesses the performance of the RDA, initiates automatic calibration, performs calibration calculations, and reports RDA status to the RPG. It formats reflectivity, mean radial velocity, and spectrum width data input from the signal processing subsystem, attaches header data, and initiates data transfer to the RPG. The program provides the capability to operate under local control or unattended remote control. Under local control, it sets RDA mode and performs the various turn on and shutdown procedures based on local control inputs. Under unattended remote control, the same operations are performed in response to the control inputs from the MSCF workstation. Under remote control operation, which is the normal operating mode, the scan pattern to be executed, waveform types, pulse repetition periods, pulse widths, and other control parameters are supplied by the RPG program. The RDASC program generates the pedestal control commands, closes the position loops of the pedestal, and serves as the control processor for the programmable signal processor (PSP) of the signal processing subsystem. This program has general functional areas which are listed below and discussed in paragraphs 1-3.3.1 through 1-3.3.7 .

- Handle Maintenance Console
- Monitor and Calibrate RDA Hardware
- Form RDA Data
- Handle Wideband Data
- Control RDA
- Control Signal Processor
- Control Pedestal

1-3.3.1 Handle Maintenance Console. The handle maintenance console function provides the operator-machine interface between the program and the RDA maintenance operator. Maintenance operator communication to the program is primarily through the alphanumeric keyboard and display (applications terminal), although provision is also included for switch/lamp inputs and outputs. The tower/utilities and transmitter data interfaces are provided through the maintenance console.

1-3.3.2 Monitor and Calibrate RDA. The monitor and calibrate RDA function assembles status and performance data from each item of equipment for the RDA. The data may be direct sensor outputs or derived in other program functions, such as dynamic response of the control pedestal. This function determines the ordering and sequence of calibration, status, and performance monitoring tests, particularly those which can not be performed simultaneously with normal radar data gathering activities; this function also calculates required calibration parameters, issues status messages and alarms, and initiates their transmission to the applications terminal display and the RPG.

1-3.3.3 Form RDA Data. The form RDA data function assembles data to be output on the wideband communications links, inserts required header data, generates the associated data parameter blocks, and passes the data parameter block to the control wideband function for data transmission.

1-3.3.3.1 Creates Parameters List. The form RDA data function creates a parameter list for the data to be transmitted. The parameters list specifies the address of the data segments to be assembled for the data set. The form RDA data function generates a header for the data. The header data includes message size, message type (i.e., base data, status, performance data, console message, wideband loop back test, and clutter filter bypass map), an identification sequence number, a date and time tag, the number of separate message segments that make up the data message, and the individual segment number. Other header information for base data includes pedestal angle positions and a calibration parameter which is derived from the automatic calibration routines and used in calculating the reflectivity data.

1-3.3.3.2 Designates Destination. The form RDA data function also designates the destination of the data. Base data enabled for transmission to the RPG is also sent to the user whenever the wideband link to a user is configured and open. Status and alarms are always transmitted to the RPG whenever the link is open. Maintenance data specified by operator inputs or RPG inputs are also transmitted when the link is open. Only high-level status data will automatically be transmitted

over the wideband communications link to the user. The form RDA data function starts and stops meteorological base data transmission over the wideband communications link in accordance with the enable data transmission command generated in the control RDA function based on RDA maintenance terminal and RPG inputs.

1-3.3.3.3 Stores Base and Status Data. The form RDA data function stores base data, status data, and technical data on Archive II medium as specified by the control RDA function based upon RDA maintenance terminal and RPG inputs. Base data includes synchronization and calibration data required to interpret the data. Any base data moment that is not enabled for transmission to the RPG during recording is not stored on the archive medium. Status data is interleaved with base data on the archive medium in the same manner that base data and status data are transmitted to the RPG. Technical data includes meteorological and calibration data used for research purposes. Base data retrieved from the Archive II medium by the form RDA data function is passed to the handle wideband function for playback to the RPG and user (if configured) as specified by the control RDA function based upon RDA maintenance terminal and RPG inputs. Playback of the base data is synchronized for real-time operation. Only those base data moments that were enabled for recording are sent to the handle wideband function for transmission to the RPG and user (if configured) during playback. Status of the Archive II function is displayed at the RDA maintenance terminal and distributed to the handle wideband function for transmission to the RPG. Archive status includes: NA (Not Available), RECORD, LOADED, CK LABEL (Checking Tape Label), FST FWD (Fast Forward), TAPE XFR (Tape Transfer), INST (Installed), SEARCH, and PLAYBACK.

1-3.3.4 Handle Wideband Data. The handle wideband data function controls the wideband interface to the RPG, the optional wideband data link to a user, and Archive II. It also monitors the status of the wideband data links, passing this information to the monitor and calibrate function, and passing on requests for special interface tests to the wideband link hardware. The data transferred to the RPG includes base data with headers, summary RDA status data, RDA status alarms, detailed RDA calibration, and performance and status information (maintenance data) either upon request, or as scheduled through adaptation data. Data transmitted over the wideband data link to the user includes base data with header, and summary status. Maintenance data is not normally transmitted over this link. Data transferred to Archive II includes base data with headers and possibly status summary or maintenance data. Data input to the RDA from the RPG includes mode and RDA function commands, volume scan program data, clutter map and clutter suppression control data, and maintenance and RDA status requests.

1-3.3.4.1 Handle Wideband Link Steps. The handle wideband link performs several steps as part of RDA cold startup, RDA shutdown, and in response to an RDA restart command.

1-3.3.4.1.1 RDA Cold Startup. The handle wideband link performs the following steps as part of RDA cold startup.

- Initialize channel terminal manager (CTM)
- Initialize communications link parameters
- Establish and verify communications with RPG and user site if implemented

1-3.3.4.1.2 RDA Restart. The handle wideband link performs the following steps in response to an RDA restart command:

- Notifies RPG (and user site, if implemented) of impending RDA restart
- Terminates wideband link with RPG (and user site, if implemented)
- Reinitializes CTM
- Reinitializes communications link parameters
- Reestablishes and verifies communication with RPG (and user site, if implemented)

1-3.3.4.1.3 RDA Shutdown. The handle wideband link performs the following steps as part of an RDA shutdown:

- Notifies RPG (and user site, if implemented) of impending RDA shutdown
- Terminates wideband link with RPG (and user site, if implemented)

1-3.3.4.2 Handle Wideband Functions. The handle wideband performs the following three functions: handle wideband link, transmit wideband data, and receive wideband data.

1-3.3.4.2.1 Handle wideband link function executes a software loop-back test. The link is deemed operational if the bit pattern transmitted matches bit pattern received. The loop-back test is initiated automatically upon RDA startup and restart, communication link reinitialization, and periodically as required by the periodicity defined by RDA adaptation data.

1-3.3.4.2.2 The transmit wideband data function receives the message header and data pointer list from the form RDA data function. This function initiates the data transmission over the link.

1-3.3.4.2.3 The receive wideband data function, when notified by handle wideband link that a message has been received, reads the header information of the incoming data for the data type and destination. The Control RDA function is to be notified by this function that data is available.

1-3.3.5 Control RDA. The control RDA function provides RDA mode control, configuration and status control and monitoring, and coordinates the operations of the other RDASC program functions, thus providing the coarse timing of the RDA. (The fine grain timing is provided by the synchronizer function of the signal processor subsystem under the control of the RDASC program.) This function sets the RDA modes based on inputs from the maintenance console and/or RPG, enables and disables base data transmission over the wideband data links, specifies data to be archived on Archive II, and RDA configuration. It includes the startup, restart and shutdown sequence, and power loss and recovery sequences. At a lower level of control, this function coordinates RDA operations, sequences the volume scan pattern, directs the pedestal angle control, specifies signal processing control and waveform parameters, and interleaves calibration and performance monitoring checks during elevation transitions.

1-3.3.6 Control Signal Processor. The control signal processor function generates and assembles the control commands, parameters, and data required for proper functioning of the components of the signal processor subsystem (the PSP, signal conditioner and synchronizer), the receiver, and the RF generator. It serves as the interface between the RDASC processor and the signal processor subsystem, initiates output of the above control data, and input of base, BIT, calibration, and test data from the components serviced by this interface.

1-3.3.7 Control Pedestal. The control pedestal function provides the immediate control of the pedestal and services the I/O interface to the antenna/pedestal.

The following control functions are provided for each axis:

- Moves to and maintains a specified angle position
- Achieves and maintains a specified angular rate

The status of the pedestal is controlled and monitored: status information is passed to the control RDA function. The dynamic performance of the pedestal angle loops is monitored and results are passed to the monitor and calibrate function. The BITE flag and sensor data are passed to the monitor and calibrate function.

1-3.3.8 Handle RDA Interprocessor Link. Redundant channel processing. In the redundant configuration, two complete transmitter-receiver-RDA control channels are provided with only pedestal/antenna and tower/utilities in common. To the extent feasible, the two channels are configured to operate independently. Interconnections and added switching include an interprocessor link connecting the RDASC processors. This interface provides the means of transmitting data between the two RDA processors in the redundant configurations.

This interconnection allows mode state data to be requested and passed between processors. Data is transmitted across the interface in either direction. Data transmitted between the two processors consists of interprocessor commands and interprocessor status data. Interprocessor status data is transmitted only in response to an interprocessor command.

Interprocessor channel input/output errors are reported by alarm “REDUN CHAN INTERFACE I/O STATUS ERROR” displayed at the RDA maintenance console and MSCF workstation. Each channel operates independently with the following exceptions and added considerations:

- Prior to entering OPERATE, the RDASC sends a status request command to the other channel (via the interprocessor link) to determine whether it is in OPERATE. If the other channel is in OPERATE, the RDA returns to the state present at the time the command to OPERATE was received and issues alarm “UNABLE TO CMD OPER-REDUN CHAN ONLINE.” Lack of response within two seconds is interpreted as not being in the OPERATE state. If this interrogation determines that the other channel is not in OPERATE, the RDA continues the transition to OPERATE sequence.
- The COMMAND OTHER CHANNEL TO STANDBY command is sent from the RPGDP to the RDASC over the wideband link as part of the RDA control commands message. Upon receipt of the COMMAND OTHER CHANNEL TO STANDBY command from the RPG, the RDA relays the command to the other channel via the interprocessor link. The RDA enters the STANDBY STATE when this command is received from the other channel if in REMOTE CONTROL, or in LOCAL CONTROL with REMOTE CONTROL ENABLED, and returns status indicating acknowledgement. Normally, this command will be issued by the MSCF operator when the link between the other channel and its RPG channel is broken, and the other channel is connected to its wideband user or Archive II recording is

active. If the RDA is in LOCAL CONTROL and REMOTE CONTROL is not enabled and COMMAND OTHER CHANNEL TO STANDBY is received via the processor link, the command is rejected and a status message is returned indicating the rejection. If the other channel rejects this command, alarm "INTERPROCESSOR STBY COMMAND REJECTED" is set. If the other channel does not acknowledge this command, alarm "NO INTERPROCESSOR COMMAND RESPONSE" is set. If the other channel accepts the command, the REDUNDANT CHANNEL STANDBY COMMAND ACCEPTED status is sent to the RPG.

- The receiver waveguide switch is controlled only from channel 2 via the Channel-2 Command, and follows to the same position as the Channel-2 pedestal control, i.e., when channel 2 has pedestal control, the receiver waveguide switch will connect the antenna receiver port to the Channel-2 RFE input. In the event the receiver waveguide switch is not connected to the channel in OPERATE, alarm "RDA CHANNEL CONTROL FAILURE" is set.
- Interprocessor status data is passed to the other channel upon request. The RDA requests status from the other channel at least once every scan sequence to monitor the interprocessor link status. Interprocessor channel response status is included in RDA performance data.
- The controlling channel controls the pedestal. The non-controlling channel will be unable to communicate with the pedestal, therefore the non-controlling channel inhibits monitoring of the pedestal status. Pedestal control switching is performed from channel 2 through the maintenance console interface. When channel 2 is unenergized, control will be from channel 1.

1-3.3.9 CPCI 01 Interface Requirements. The RDASC program CPCI 01 interfaces with the RDA hardware, the wideband data link to the RPG, the optional wideband data link to a user, the RDASOT program, the operating system, and for FAA sites, the remote monitoring subsystem (RMS). The receiver and the RF generator do not interface directly with the RDASC program, but interface via the signal processing subsystem. The transmitter and tower/utilities interface through the DAU component of the RDA control (which includes the RDASC processor). The antenna/pedestal interfaces directly through the mux bus of the RDASC processor. The signal processing subsystem, the wideband data links, and the Archive II interface with the RDASC processor by direct memory access (DMA). The RDA operator-machine interface is through an alphanumeric display terminal.

1-3.3.9.1 Maintenance Console Interfaces. There are two interfaces between the RDASC processor and the maintenance console. One is to the display terminal and the other is to the DAU circuitry. The DAU circuitry provides the interface to the maintenance panel, the tower/utilities, and the transmitter. The physical and electrical characteristics of these are in EIA Standard RS-232-C. These interfaces are accessed through standard operating system calls. Data transferred over the latter interface includes transmitter commands, status and BITE data, tower/utilities commands, and the maintenance panel data. An alphanumeric display and keyboard are used in RDA control with an off-the-shelf device handler. Input data is via keyboard and output data is via alphanumeric display characters.

1-3.3.9.2 Pedestal Interface. The pedestal interfaces the RDA processor over a RS-232-C link to an 8-channel multiplexer on the mux bus of the processor. Physical, electrical, and protocol characteristics of this link are in accordance with EIA Standard RS-232-C. The interface is accessed through a standard call to the operating system. Data transferred over the interface includes position and/or rate and control commands, position and rate data, interlock and hardware status, and BIT data.

1-3.3.9.3 Signal Processing Interface. The interface between the RDASC processor and signal processing subsystem allows 2 Mb/second data transfers between the output signal conditioners of the programmable signal processor (PSP) within the signal processing system (SPS) and the DMA bus of the RDASC processor (refer to paragraph 1-3.4 for SPS). The output signal conditioner of the PSP directs data transfers to appropriate areas within the PSP, and the signal conditioning and synchronizer sections of the signal processing subsystem. The latter section also interfaces data to and from the receiver and the RF generator.

1-3.3.9.4 Wideband Data Link Interface. The wideband data interface to the RPG and the wideband data interface to a user are physically and functionally identical. Interface signal definition, control commands, status and alarm information are specified in wideband communication link (CI). Data transferred to the user includes base (meteorological) data of reflectivity, mean radial velocity, and spectral width with attached headers, and summary RDA status. This data is identical to the corresponding data transmitted to the RPG. Data transmitted over the interface from the RPG includes scan profile data, RDA state commands, and clutter map override. RDA to RPG data includes digital radar data, status messages, and console messages.

1-3.3.9.5 CPCI 10 Interface. The RDASC program CPCI 01 interfaces with the operating system software CPCI 10. The associated drivers and handlers of the operating system software provide all interfaces with system peripherals, except for the pedestal driver and the PSP drivers which are not included in the CPCI.

1-3.3.9.6 RDA System Operational Test Interface. The RDASC program interfaces with the RDASOT program CPCI 06 via shared disk data sets. Calibration data sets formed during RDASOT program operation are stored on disk for use by the RDASC program.

1-3.3.9.7 Target Processor for CPCI 01. The RDASC program resides in a single processor computer configured with 8 Mb of memory, mass storage, and a display/keyboard. Redundant channels are provided as a system configuration option. This redundant configuration includes an RDASC processor in each channel. When configured, the two processors will be connected via an asynchronous, half duplex, RS-232-C channel. This interconnection allows mode state data to be requested and passed between processors.

1-3.3.9.8 Archive II Interface. An Archive II interface exists between the RDASC program and the Archive II device.

## 1-3.4 RDA SIGNAL PROCESSING SOFTWARE PROGRAM CPCI 02.

CPCI 02 is used to process receiver outputs and send processed data, primarily base data, to the RDASC which is a general purpose computer in charge of RDA control and communications with the RPG equipment complex. The signal processor (SP) is a hybrid design composed of hardwired

modules identified as the hardwired signal processor (HSP), and programmable modules identified as the PSP. The SP tasks consist of and are broken down into HSP and PSP tasks as listed in Table 1-9. A part of CPCI 02 resides and operates within the RDASC processor. The RDASC processor resident software is used to generate and update higher level control sequences which are then downloaded to, and executed by, the PSP during run time.

Table 1-9. Hardwired Signal Processor and Programmable Signal Processor Tasks

| Task | HSP | PSP |
|---|---|---|
| Receiver interface | X | |
| Ground clutter suppression filtering | X | |
| Synchronizer/PRF generator | X | |
| Video analog/digital conversion | X | |
| Compute base data | | X |
| Interface with RDA status and control processor | | X |
| RDA calibration | | X |
| Performance monitoring, fault localization | X | X |

1-3.4.1 Compute Base Data. The PSP computes base data. The base data subtasks consist of the following:

- Power accumulations
- Pulse pair accumulations
- Censor strong point clutter
- Spectrum moment calculation (power, velocity, width)
- Range ambiguity resolution
- Reflectivity scaling (range squared, atmospheric attenuation, radar gain) and formatting

1-3.4.2 RDASC Processor Interface. The PSP provides the computer interface between the SP and the RDASC processor. The PSP outputs include the base data and calibration data. HSP outputs, such as built-in-test (BIT) data, are passed through the PSP computer interface unaltered. PSP inputs consist of data destined for PSP and HSP. PSP control data includes microcode, macrocode, and control parameters. The HSP control data is passed through the PSP interface to the HSP unaltered.

1-3.4.3 RDA Calibration. The signal processing program in support of RDA calibration measures the following:

- Bias and noise power

- Fundamental frequency Fourier coefficients
- Input data collection to support system calibration
- Status reporting

1-3.4.4 Performance Monitoring/Fault Localization. The PSP implements performance monitoring/fault localization via hardware which is controlled by programs in the RDASC processor. Performance monitoring is controlled by the RDASC program CPCI 01. Fault localization is controlled by the RDA system operability test (RDASOT) program CPCI 06. PSP performance monitoring consists of the following:

- Normal operational processing of test signals injected as RF into the antenna and digital test signals injected at the HSP
- Parity tests on memory
- Fault localization tests performed periodically in a manner that does not interface with base data generation
- Pass through mode - The PSP pass through mode collects I, Q, and log data over a specified range interval or PRT interval and transmits the collected data to the RDASC processor. This mode supplies the RDASC processor with raw data which can be processed by high-level language routines which are easily devised relative to PSP microcoded routines.

1-3.4.5 Program Control. The PSP program resides in an ACU in the form of microcode and macrocode. The PSP is slaved to the RDASC processor which is the control processor for the PSP. The major events in PSP operation consist of the following:

1-3.4.5.1 Power Turn On. The power supply generates a power on reset which causes the PSP to enter an initialization mode.

1-3.4.5.2 Initialization. The RDASC processor downloads tables into AU memories and initiates or downloads PSP microcode into random access memory (RAM). Parameters required by hardwired modules (HSP) are downloaded as required by the operational and test programs.

1-3.4.5.3 Start Elevation Layer. The RDASC processor downloads PSP macrocode (including macrocode parameters) and HSP module parameters and prepares the PSP to start processing upon receipt of the start of radial command from synchronizer and issues a start command to the signal processor.

1-3.4.5.4 Radials. The PSP generates base data reports every radial. The azimuth extent (nominally 1.0 degree) of a radial is specified by the RDASC processor in terms of the waveform pulse repetition time (PRT) and number of pulses per radial. The HSP generates the pulse repetition time (PRT) waveform, analog-to-digital (A/D) clocks, and radial clocks. The PSP base data function is organized around radials. The PSP radial timing is synchronized by radial clocks generated by the HSP. PSP programming tasks define the processing to be performed on each radial.

1-3.4.6 Base Data Processing Modes. Four PSP processing modes (also called tasks) are provided for the generation of base data:

- Contiguous surveillance waveforms
- Contiguous Doppler waveforms with range ambiguity resolution
- Contiguous Doppler waveforms without range ambiguity resolution
- Batch waveforms

1-3.4.6.1 Contiguous Surveillance Waveforms. Contiguous surveillance waveforms are designed to provide reflectivity estimates on low elevation layers where good clutter filtering is essential and where long unambiguous range is required. The contiguous surveillance processing mode generates the surveillance reflectivity array in 1/2 dB and 1 km granularity and the surveillance echo power array with the same granularity. Both arrays are sent to the RDASC processor for each processing radial. The surveillance echo power arrays are stored in the RDASC processor for an entire elevation layer scan and then sent back to the PSP, radial by radial, while the PSP processes the same elevation layer with continuous Doppler waveforms. The PSP employs the surveillance echo power arrays to resolve range ambiguities in the Doppler data.

1-3.4.6.2 Contiguous Doppler Waveforms with Range Ambiguity Resolution. Contiguous Doppler waveforms are employed to provide velocity and spectral width arrays at low elevation where range ambiguity resolution is required. The velocity and width base data has 1/2 meter/second and 250 m granularities. Range ambiguity resolution employs the surveillance echo power array fed back to the PSP from the RDASC processor, radial by radial.

1-3.4.6.3 Contiguous Doppler Waveforms without Range Ambiguity Resolution. Contiguous Doppler waveforms are employed to provide Doppler reflectivity, velocity, and spectral width arrays at high elevations where Doppler waveforms are range unambiguous. The PSP velocity and width base data have 1/2 meter/second and 250 m granularities.

1-3.4.6.4 Batch Waveforms. Batch waveforms contain both surveillance and Doppler pulse trains within each radial in order to allow resolution of range ambiguities during a single elevation cut. It is used where a high degree of clutter suppression is possible and the contiguous waveforms are not required. The data granularities and signal processing is essentially the same as that performed during the other waveform modes.

1-3.4.7 HSP Tasks. The HSP tasks are listed as follows:

- Receiver interface
- Ground clutter suppression filtering
- Synchronization/PRF generation

The HSP receives A/D data, processes it, and outputs it to the PSP. Ground clutter filtering is performed by the processing of the I, Q, and log video. The synchronizer in the HSP provides the timing signals used throughout the RDA.

## 1-3.5 RDASOT SOFTWARE PROGRAM CPCI 06.

The RDASOT is an off-line program that executes under the supervision of the operating system CPCI 10. All of the RDASOT operations relate to either determining operability of the RDA and/or

enhancing the maintainability of the RDA. The RDASOT is divided into the following four major functions:

- SOT Control
- Diagnostic tests
- Calibration tests
- Manual control and display

Refer to Section 4-7 for a more detailed description of RDASOT.

1-3.5.1 Diagnostic Tests. The diagnostic tests allow the operator to test the operability of each piece of hardware. The following paragraphs describe each RDASOT diagnostic test.

1-3.5.1.1 Transmitter Diagnostic. The transmitter diagnostic verifies operability of the transmitter. Upon detection of an error, the diagnostic displays an error message and secondary fault isolation is performed (refer to Chapter 6, Section 6-4 ). The transmitter diagnostic incorporates extensive use of built-in-test equipment (BITE) status.

1-3.5.1.2 Tower/Utility Diagnostic. The tower/utility diagnostic verifies operability of the environmental control system, auxiliary power generator, power distribution system, and site security system. Upon detection of an error, the diagnostic displays an error message and secondary fault isolation is performed (refer to Chapter 6, Section 6-4 ). The tower/utility diagnostic incorporates extensive use for BITE status.

1-3.5.1.3 DAU Diagnostic. The DAU diagnostic verifies operability of the DAU. Upon detection of an error, the diagnostic displays an error message and secondary fault isolation is performed (refer to Chapter 6, Section 6-4 ).

1-3.5.1.4 Pedestal Diagnostic. The pedestal diagnostic verifies operability of the pedestal. The diagnostic incorporates sensory information from the DAU and the pedestal. It uses built-in-tests (BIT) residing in the pedestal for the detection of failures. Upon detection of an error, the diagnostic displays an error message and secondary fault isolation is performed (refer to Chapter 6, Section 6-4 ).

1-3.5.1.5 Receiver Diagnostic. The receiver diagnostic verifies operability of the receiver. Performs RF/IF monitoring and test source selections. Fault detection is performed by injection of a test signal and the monitoring of the test signal through the receiver. Upon detection of an error, the diagnostic displays an error message and secondary fault isolation is performed (refer to Chapter 6, Section 6-4 ).

1-3.5.1.6 PSP Diagnostic. The PSP diagnostic verifies operability of the PSP. This includes the input signal conditioner (ISC), arithmetic control unit (ACU), arithmetic units (AUs) and the IOC. Fault detection is performed through end-to-end tests. Predefined data is injected at the front end and the resultant data patterns received from the PSP are inspected. Failures are determined through error patterns in the data. Upon detection of an error, the diagnostic displays an error message and secondary fault isolation is performed (refer to Chapter 6, Section 6-4 ).

1-3.5.1.7 HSP Diagnostic. The HSP verifies operability of the converter, prescaler, clutter filters, and the combiner. Upon detection of an error, the diagnostic displays an error message and secondary fault isolation is performed (refer to Chapter 6, Section 6-4 ).

1-3.5.2 Calibration Tests. The calibration tests perform a complex spectrum analysis on radar data, generate clutter maps, and provide a sun source check to update pedestal calibration data parameters. The following paragraphs briefly describe these three items.

1-3.5.2.1 Complex Spectrum Measurement. The complex spectrum measurement will display in tabular form, the log amplitude and phase for each spectral line of a known test target. The complex spectrum measurement is a systems confidence test and not a diagnostic. Operator interpretation of the output data is required to determine the operability of the system.

1-3.5.2.2 Clutter Bypass Map Generation. The RDASOT is responsible for the generation of the site dependent clutter filter bypass map. The clutter filter bypass map is used by the operational program. The generation of the map is automatic.

1-3.5.2.3 Sun Source Checks. This function uses the sun as a test source and performs checks on the antenna and radome performance and pedestal alignment (to true north). Results from these checks must be interpreted by the operator to determine the operability of the system.

1-3.5.3 Manual Control and Display. The manual control and display permits selected operations involving the pedestal, receiver/signal processor, DAU, and the PSP.

1-3.5.4 CPCI 06 Interface Requirements. The RDASOT program interfaces with the RDA hardware and operating system CPCI 10. The hardware interfaces are the receiver interfaces with the RDASC processor via the signal processing system, the transmitter and tower utilities interfaces via the DAU components of the RDA control unit, the pedestal interfaces with the RDASC processor, and the RDA operator-machine interfaces via the maintenance terminal.

## 1-3.6 DATA PROCESSING DIAGNOSTIC PROGRAM CPCI 07.

The data processing diagnostic program supports off-line testing of the RDASC processor hardware. CPCI 07 provides the capability to isolate faults detected as a part of the status monitoring and error detection, or during operational readiness verification. CPCI 07 isolates faults to the LRU level, provides for verification of the repair action, and provides a record of all diagnostic activities. CPCI 07 performs the following tests on the RDASC:

- N/A * VME to concurrent I/O Bus Interface Diagnostic
  (* This diagnostic is not on tape, but is internal to the VCI-C board)
- 06-127 Common RS-232 Interface Off-Line Test Program (CMM RS-232 Off-Line (7590, 7662)
- 06-145 Diagnostic Loader/Executive (Low Loader/Executive or High Loader/Executive)
- 06-290 Programmable Signal Processor (PSPI) Diagnostic (PSPI Diagnostic)
- 06-297 Intelligent Peripheral Controller (IPC) Test (IPC Diagnostic)

- 06-319 M3200 CPU Diagnostic (Micro 3200 CPU Diagnostic)
- 06-321 M3200 Cache Diagnostic (Micro 3200 Cache Diagnostic)
- 06-325 Composite Memory Module (CMM) Diagnostic (CMM/EMM/ICMM Diag. Pt 1 or Pt 2)
- 91-539 Optical Disk Controller Diagnostic Program (Optical Disk Test).

Detailed descriptions of the processor diagnostic tests are found in Section 4-6 .

# Section 1-4. Reference Data

## 1-4.1 RDA GROUP REFERENCE PUBLICATIONS.

The WSR-88D system commercial equipment reference documentation applicable to the RDA Group is contained in Table 1-10.

## 1-4.2 GLOSSARY OF TERMS.

The glossary of terms is contained in the System Manual, NWS EHB 6-500.

## 1-4.3 EQUIPMENT SUPPLIED.

The equipment required for maintenance and supplied as RDA Group equipment is contained in Tables 1-20, 1-21, 1-22, and 1-25 of the System Manual, NWS EHB 6-500.

## 1-4.4 STANDARD TOOLS.

The listing of standard tools required for RDA Group maintenance is contained in Table 1-26 of the System Manual, NWS EHB 6-500.

## 1-4.5 STANDARD TEST EQUIPMENT.

The listing of standard test equipment required for RDA Group maintenance is contained in Table 1-27 of the System Manual, NWS EHB 6-500.

## 1-4.6 SPECIAL PURPOSE TOOLS AND FIXTURES.

The listing of special purpose tools and fixtures required for RDA Group maintenance is contained in Table 1-28 of the System Manual, NWS EHB 6-500.

## 1-4.7 CONSUMABLES/EXPENDABLES.

The list of consumables/expendables required for RDA Group maintenance is contained in Table 1-29 of the System Manual, NWS EHB 6-500.

Table 1-10. RDA Group Reference Publications

| EHB Number | Title |
|---|---|
| 6-505 | SCSI Enclosure Installation and Configuration Manual |
| 6-51 1 | WSR-88D Transmitter Field Maintenance Manual |
| 6-512 | Model HA-4 Compressor/Dehydrator Installation, Operation and Maintenance Manual P/N 19331 |
| 6-512-1 | Model HA-4X2 Dual Outlet Compressor/Dehydrator Installation, Operation, and Maintenance Manual P/N 41642 |
| 6-513 | Maintenance Instructions Antenna Pedestal System (Limited Production) |
| 6-514 | Operations and Maintenance Instructions Pedestal System |
| 6-561 | EXB-8500 8mm Cartridge Tape Subsystem User's Manual |
| 6-562 | EXB-10i Cartridge Handling Subsystem |
| 6-563 | APC Back-Ups |
| TBD | Swing-Out Power Subsystem Installation Guide |

# CHAPTER 2

# NOT USED

# CHAPTER 3

# NOT USED

# CHAPTER 4

# OPERATIONS

## Section 4-1. Introduction

4-1.1 GENERAL.

This chapter contains general information describing the Radar Data Acquisition (RDA) Group operating procedures and provides detailed instructions for performing all computer operations conducted at the RDA maintenance terminal. Additional procedures are contained in Chapter 6 as required to perform the RDA Group equipment turn-on and shutdown, and to support fault isolation, preventive maintenance, and corrective maintenance actions. The material in this chapter is organized as follows.

**NOTE**

This chapter and its corresponding sections refer to the RDA Data Processor (RDADP) as UD5, the Receiver as UD4, the Transmitter as UD3, and the Waveguide Pressurization Unit as UD6. Unless otherwise specified, the information also applies to redundant systems UD105, UD104, UD103, and UD106.

4-1.1.1 Section 4-1, Introduction. This section describes the overall RDA Group operating concepts and provides background information on the features and operational characteristics of the OS/32 Operating System and the dual-port maintenance terminal.

4-1.1.2 Section 4-2, Controls and Indicators. This section provides figures and tables for use in the identification, location, and description of the RDA Group equipment controls and indicators.

4-1.1.3 Section 4-3, System Console Mode Operations. This section provides the procedures used to interact with the OS/32 Operating System program in order to perform tasks such as application and diagnostic program loading and initializing, software installation, all routine tape and disk operations, and for using miscellaneous operating system utilities. For OS/32 operations, the RDA maintenance terminal is used in the system console mode. A complete listing with description of all required OS/32 operator commands and error messages is included.

4-1.1.4 Section 4-4, RDA Control/Diagnostic System Operations. This section provides information and procedures on the Control/Diagnostic System (CDS) microprocessor driven network resident in the RDA data processor. Included are key commands and error message descriptions associated with CDS operations. The maintenance technician will use the CDS functions for checkout and fault isolation purposes.

4-1.1.5 Section 4-5, RDA Application Mode Operations. This section provides the procedures used to interact with the RDA Status and Control (RDASC) applications program Computer Program Configuration Item (CPCI) 01 in order to perform RDA local control operations, including system status monitoring, mode control, modification of adaptation data, channel switching for redundant systems, and miscellaneous maintenance tasks. For RDASC operations, the RDA

maintenance terminal is used in the applications terminal mode. A complete summary of all RDASC terminal commands is included.

4-1.1.6 Section 4-6 , RDA MICRO 3200 (M3200) Processor Diagnostic Operations. This section provides the procedures used to load, initialize, and execute the M3200 Data Processor diagnostic programs and tests. A description of each of the diagnostic programs and related subtests is included.

4-1.1.7 Section 4-7 , RDA System Operability Test (RDASOT) Operations. This section provides the procedures used to load, initialize, and execute the RDASOT program and its various tests and control functions. A description of each of the RDASOT tests and functions is provided.

4-1.1.8 Section 4-8 , Emergency/Recovery Procedures. This section provides instructions for responding to operating system or system console error conditions, including terminal hang-ups. Tables of operating system error messages are included.

## 4-1.2 RDA OPERATING MODES AND STATES.

The RDA Group normally operates in the ON-LINE OPERate mode under REMote control from the Radar Product Generation (RPG). In this configuration, the RDASC is operating under the control of the RDA applications program, the RDA antenna is radiating and executing the selected volume coverage pattern, the received echo returns are being processed into base data, and the base data is being distributed via the wideband data link to the RPG and user (if configured). Also, RDA performance and status is being monitored and reported to the RPG and the auto-calibration process is enabled and in-process. The RDA site is normally unattended and all RDA control commands are entered via the remote MSCF workstation. For FAA sites, commands may also be entered via the Remote Monitoring Subsystem (RMS). There is no requirement for local operation of the RDA unless a scheduled preventive maintenance action or an RDA fault isolation procedure is to be performed.

4-1.2.1 Maintenance Activity. When a maintenance activity is to be performed at the RDA, the technician must first verify or determine the RDA Operability Status (SHuTDowN, INOPerable, MaiNTenance MANdatory, MaiNTenance REQuired, or ONLINE). The technician must then establish the appropriate RDA control state (LOCal or REMote), (for FAA: Local MMI, RMS, or Remote), Operating Mode (OPERate or MaiNTenance), and Operating State (STartUP, STandBY, OPERate, PLaYBacK, OffLine OPERate, or ReSTartUP). Next, the technician must initiate the control actions needed at the RDA maintenance terminal to support the fault isolation or maintenance action to be performed. If the ARCH2 status field indicates that playback or record is in progress, the ARCHIVE II should be disabled before proceeding any further. Upon completion of the maintenance activity, the RDA group must be restored to the ONLINE OPERate mode under REMote control for normal operations.

4-1.2.2 RDA Main Menu. The active RDA mode, control state, and operating state are determined by observing the RDA Main Menu on the applications terminal. The Main Menu also provides a message indicating the RDA operability status, and permits the command input capability required to request, enable, or change the mode and state configuration. Refer to NWS EHB 6-510-1, RDA User's Guide, for a detailed discussion and definition of the allowed modes and states, the Main Menu, and the associated command options.

**NOTE**

It is extremely important to read and understand these terms and to be able to observe them on the RDA Main Menu, in order to properly initiate and perform RDA fault isolation.

4-1.2.3 RDA Status and Control Processor. Nearly all fault isolation and maintenance activities require interaction with the RDASC via the maintenance terminal in either the system console mode or the applications terminal mode. System console mode refers to maintenance terminal operations which require interfacing with the OS/32 Operating System program and the special test and diagnostic programs which are initiated via the operating system. Applications terminal mode refers to maintenance terminal operations which require interfacing with the RDA Applications Program, CPCI 01.

4-1.3 OPERATING SYSTEM 32 (OS/32).

During normal on-line operation, the M3200 RDASC executive functions operate under the control of the OS/32 Operating System program, while the RDASC simultaneously executes the data processing and distribution tasks of the RDA Applications Program, CPCI 01. The M3200 RDASC processor contains the internal bus structures and architecture to support a real-time, multi-tasking environment, while simultaneously permitting multiplexed input/output (I/O) operations. The discussion which follows describes the essential concepts necessary for understanding the manner in which the M3200 processor operates under the control of two programs simultaneously, while interfacing on two separate ports to both the system and applications console functions.

4-1.3.1 Basic Concepts. The basic M3200 processor consists of the central processor unit (CPU), memory and memory access controllers, input/output channel circuitry and devices, magnetic media storage devices (tapes and/or disks), and an interactive video display unit (VDU) for operator interface. Also included are assemblies which perform the functions of master timing and clock synchronization, automatic program loading, and special operations such as fixed-point computation processing.

4-1.3.1.1 CPU. The heart of the computer system is the CPU. It reads and interprets coded instructions and data stored in the processor memory to perform the operations required to accomplish the program's functions. The processor instructions are grouped into instruction streams or tasks which are invoked by external operator commands or internal program calls. A program is thus a collection of coded instructions and data grouped into a set of tasks organized to accomplish a specific function.

4-1.3.1.2 Magnetic Tapes or Disks. Programs and data are stored on magnetic tapes or disks as a sequenced pattern of information called a file. Programs and data files are given names so they may be copied, read, or otherwise accessed during operation. Program files must be read into the computer memory (loaded) before they can be executed, and an initialization command must be given to start the program running. Another command must be given to stop, or terminate, a program that is running. A program may contain many tasks or subroutines. Some programs, however, perform or execute but a single task. Single task programs are usually elementary test or utility programs which are used during maintenance operations. Most of the tasks in a complex

program must be executed in a predetermined sequence in order to obtain meaningful results. However, there are times when several of the program tasks may be running simultaneously.

4-1.3.1.3 Processor Operations. Many processor operations involve reading and/or writing information to disks and tapes, sending messages for display on the video display terminal (VDT), receiving and routing commands and data input received from the terminal keyboard, mouse, or other input device, and controlling the reading and writing of data and instructions to/from memory. Routine tasks such as these are usually collected into a program called the operating system and are called executive or housekeeping tasks. The operating system also permits user interface with the processor to control specific operations, such as tape and disk operations for program loading and file copying. This is accomplished through the use of a set of operator commands which are entered at the video terminal via the keyboard.

4-1.3.1.4 OS/32. The proprietary operating system used in the M3200 Processor is the OS/32 Operating System, which provides a comprehensive multitasking environment. A multitasking environment permits several tasks (or programs) to run concurrently, while the Operating System performs task scheduling, communication link management, and processor status monitoring in addition to the tasks cited above. The OS/32 Operating System is a program which resides in a file on the hard disk device that is loaded and initialized automatically upon system startup. The operator interface with the OS/32 program is accomplished on a VDT called the system console. It communicates with the processor CPU via a multiplexed serial channel called the system port. The M3200 processor has additional peripheral ports which may be used for printer and additional terminal interfaces.

4-1.3.2 Operating System Command and Data Entry Prompts. When the OS/32 Operating System is on-line (loaded and running), a command request prompt (*) is displayed on the console screen. Whenever this prompt (*) is present on the system console screen, the operator may enter OS/32 commands and interact with the OS/32 Operating System. Commands must be entered in a specific and exact format, called the command syntax. Each command has a unique syntax which must be entered, or the operating system will respond with an operator input error message. General rules for OS/32 command syntax are presented in paragraph 4-1.3.7.1 , and detailed command format data is contained in Section 4-3 . A second type of prompt, the data request prompt, is presented on the system console screen when an operating system task being executed requires an operator input at the system console keyboard. The data request prompt consists of the task identifier (taskid) of the task requesting the data, followed by a greater than symbol (taskid>). In most cases, the taskid is simply the name of the task. When the operator types a command or data at the keyboard, the typed characters are presented on the screen command line immediately following the prompt. However, neither the command nor the data typed is sent to the computer until the <Return> key is pressed.

4-1.3.3 Secondary OS/32 Features. The OS/32 Operating System continually tests and monitors the processor and associated peripheral hardware status, and reports significant events such as disk failures, power fail/restore conditions, and task terminations as status and error messages. The maintenance-related messages and operating system commands available for RDA maintenance tasks are described in Section 4-3 . In addition to the basic OS/32 program, there are auxiliary programs available for special functions. These programs are called system support utilities. System support utilities are programs that are executed within the environment created by the basic

OS/32. They provide the user with support functions that make OS/32 easier to use, such as simpler ways to save files to a magnetic tape or disk, restore files to a disk, or rename, initialize, and check the integrity of a disk. These programs are called system tasks. The syntax for using the support utilities is the same as the syntax for the basic OS/32 command set. In addition to the basic OS/32 command set, there are additional commands available to the user for interfacing with the operating system. These commands are part of a command language called the command substitution system (CSS). The CSS language uses the basic OS/32 command set and additional commands. CSS commands are contained in special CSS batch files and are used for convenience, and to avoid lengthy, repetitive user input instructions. A CSS command is used in the same manner as other OS/32 commands. The OS/32 and CSS commands used by the WSR-88D operators and technicians are listed and described in Section 4-3.

4-1.3.4 System Console Special Key Sequences. The following paragraphs provide a description of some special key sequences.

4-1.3.4.1 <Ctrl> and S Keys. Simultaneously pressing the <Ctrl> and S keys stops the system console screen from scrolling. This is useful when data output to the system console uses more than the number of lines on the screen. This key sequence permits easy reading.

4-1.3.4.2 <Ctrl> and Q Keys. Simultaneously pressing <Ctrl> and Q keys restarts the scrolling, allowing data that had not yet been displayed to appear.

4-1.3.4.3 Special Keys. Special key sequences are used to configure the system console when it is first installed or if it is replaced. When the applications terminal and system console share one screen, there are control sequences used to show both displays simultaneously, each on half of the screen. Simultaneously pressing the <Shift> key and the <Port> key shifts display from application terminal mode to system console mode.

4-1.3.4.4 <Break> Key. Once the operating system has been loaded, the <Break> key functions within the operating system environment. The following paragraphs describe the functions of the <Break> key in the OS/32 environment.

4-1.3.4.4.1 If a task is in the process of reading from or writing to the system console, the operator can interrupt by pressing the <Break> key on the system console. This forces the system into command mode. After the command line is accepted, the user interaction with the console is restarted. This process is transparent to the user task.

4-1.3.4.4.2 Command reads prompted by the operator's use of the <Break> key are not interrupted to allow tasks to write messages.

4-1.3.4.4.3 The <Break> key can also be used to terminate further system responses to a command. This is particularly useful when EXAMINE and DISPLAY commands are issued, causing large quantities of data to be output to the system console.

4-1.3.4.5 <Ctrl> and V Keys. Simultaneously pressing <Ctrl> and V keys twice followed by the <Return> key allows the operator to enter the CDS mode.

4-1.3.5 Loading OS/32. When the RDA data processor is first turned on, no software programs are loaded. The hardware needs the OS/32 software to be in ready access memory (RAM) (shared

memory) to run and control communication with the peripheral devices, including the small computer system interface (SCSI) disk. Since the memory card in the data processor has RAM memory (which is erased when the power to them is shut off), OS/32 data is not stored in RAM memory. OS/32 is stored in image format on a SCSI disk which is not erased when power to it is shut off. The hardware cannot communicate with the peripherals without OS/32 being loaded and started in RAM. There is a set of programmable read only memory (PROM) chips in the hardware which contain enough instructions to load the operating system from the disk into RAM. Data stored in these chips is not lost in the event of a power loss. In the RDA, the PROM chips are located on the Loader Storage Unit (LSU) UD5A12A20A2 card, and the program loaded in these chips is called the 8 Kb LSU BOOT loader program. At the RDA, pressing the INT switch on the processor control panel starts the LSU program. After loading OS/32, processing capabilities are tested by the basic confidence test. If it passes the test, `BASIC TEST COMPLETE` is displayed. If the OS/32 program load fails a confidence test that is run, an error message is displayed. Try to reboot the operating system. If the reboot fails again, consult the fault isolation procedures in Chapter 6.

4-1.3.6 Memory Configuration Error. When a memory configuration error is detected at system startup, the following message is displayed on the system console:

`MEMORY CONFIGURATION ERROR` *`xx`* `BLOCK` *`yy`*

`MEMORY ERROR RECORDING DISABLED`

*`yy`* specifies the memory block where the error was detected. If *`xx`* is a 01, 02, or 03, it is most likely a hardware problem. Consult the fault isolation procedures in Chapter 6.

4-1.3.7 OS/32 Syntax. The system console in the RDA Group is used to interface with the OS/32 environment only. All entries at the console must follow the OS/32 general syntax rules.

4-1.3.7.1 OS/32 General Syntax Rules. Multiple commands may appear on the line, but each one must be separated by a semicolon (;). Certain commands must appear last on a line or must be the only command on the line. These restrictions are discussed in the sections dealing with the individual commands. If the first character of any command input is an asterisk (*), the remainder of that line is considered to be a comment and is not executed. It is copied to the system log device if logging is active.

4-1.3.7.2 OS/32 Statement Syntax Conventions. The following statement syntax conventions are used in all statement, command, and instruction formats.

4-1.3.7.2.1 Underlining points out the mnemonic of the entry and means that at least the underlined portion must be entered. If no part of a command, statement, or instruction is underlined, the entire command, statement, or instruction must be entered:

PAUSE

4-1.3.7.2.2 Underlined letters must be entered exactly as shown (no distinction between upper and lower case):

DELETE $fd_1[,fd_2,...,fd_n]$

4-1.3.7.2.3 Lower-case letters represent parameters or denote information provided by the user:

CANCEL taskid

4-1.3.7.2.4 Punctuation must be entered exactly as shown.

4-1.3.7.2.5 Commas separate parameters and substitute for missing file descriptors (fd) and positional parameters:

DELETE $fd_1[,fd_2,...,fd_n]$

4-1.3.7.2.6 Commas preceding braces inside brackets must be entered if one of the optional parameters is chosen:

$$\text{DISPLAY ERRORS } \left[ , \left\{ \begin{matrix} \text{fd} \\ \text{system console} \end{matrix} \right\} \right]$$

4-1.3.7.2.7 Commas inside of brackets must be entered if the optional parameter is chosen:

BFILE [fd,] lu

4-1.3.7.2.8 All ellipses (vertical or horizontal dots) represent an indefinite number of parameters or a range of parameters:

$$\text{BUILD } \left\{ \begin{matrix} \text{fd}[\text{APPEND}] \\ \text{lu} \end{matrix} \right\}$$

.
.
ENDB

4-1.3.7.2.9 Brackets represent an optional parameter:

CONTINUE [address]

4-1.3.7.2.10 Braces represent required parameters of which one must be chosen:

$$\text{CLOSE } \left[ \begin{matrix} \text{lu}_1 \; [, \text{lu}_2, \ldots, \text{lu}_n] \\ \text{ALL} \end{matrix} \right]$$

4-1.3.7.2.11 BOLD items represent a default option:

$$\text{DISPLAY DEVICES } \left[ \left[ , \left\{ \begin{matrix} \text{fd} \\ \textbf{system console} \end{matrix} \right\} \right] [, \text{DCB}] \right]$$

4-1.3.7.2.12 An equal sign associates a parameter with its keyword:

SWOP OLDPRIMARY=$dev_1$: ,NEWPRIMARY=$DEV_2$:

4-1.3.7.2.13 All commands and parameters can be entered in either upper case or lower case. Parameters that are retained internally (such as task identifiers) are translated to upper-case. Subsequent displays show the upper-case version.

4-1.3.7.2.14 The OS/32 commands use decimal, rather than hexadecimal, numbers for most numeric operands. A major exception is addresses, which are expressed in hexadecimal. Leading zeros can be omitted in numeric operands, whether decimal or hexadecimal.

4-1.3.7.2.15 Task identifiers (taskid) must consist of one to eight (8) alphanumeric characters; the first character must be alphabetic. The background task has the special identifier .BG[nnnnn].

4-1.3.7.3 OS/32 File Descriptors. File descriptors, abbreviated as fd, are entered in a standard format.

Command Format

[ voln : / or / dev : ] fd [.[ext]] [/acctno]

| Parameters | Description |
|---|---|
| voln: | Is the name of a disk volume. If voln: is not specified, the default is:<br>• TEMP volume for temporary files<br>• SPOOL volume for spool files<br>• SYSTEM volume for all other files. |
| dev: | Is a 1- to 4-character device name. |
| fd | Is the name of a file and can be from one to eight characters long. If a filename is specified when a device mnemonic is specified as dev:, the filename is ignored. |
| ext | Is the name of the extension and consists of from one to three alphanumeric characters. If .ext is not specified, a default extension corresponding to the appropriate command is appended. If the period (.) is specified with no extension, the default is blanks. |
| acctno | Is a decimal number ranging from 0 to 65,535 specifying the account number associated with the file. Account number 0 is used for system files and is the default for all operator commands. |

## 4-1.4 RDA MAINTENANCE TERMINAL.

The maintenance terminal is a two piece modular unit consisting of a monitor and a detached, low profile keyboard. The terminal has a tilt and swivel display with a 14-inch screen. The keyboard has a cursor positioning and numeric keypad as well as 16 programmable function keys. The RS-232C autonomous connections at the back of the base can be connected to two ports of the same host, or connected to two different hosts. One of these can be used as a printer port. Split screen display is another feature of the maintenance terminal. At installation or when the terminal is replaced, the configuration of the terminal must be checked. The setup configuration procedure for the terminal is located in Chapter 6, Section 6-5 .

4-1.4.1 Modes. The terminal can operate in different modes. The manner in which the terminal operates depends on the option chosen for each parameter in the setup configuration mode. The terminal can be configured manually from the keyboard (local mode) or automatically from the host computer. With the keyboard and power cord connections complete, the terminal can be configured manually in the setup configuration mode without the computer ports connected. While in the setup configuration mode, the terminal is considered to be off-line. While in any mode other than setup configuration, the terminal is considered to be on-line.

4-1.4.2 Keyboard Layout. The keyboard is a standard typewriter-style keyboard which includes a numeric keypad with 14 keys, five separate cursor control keys, 16 programmable function keys (shiftable to 32), 12 dedicated function and control keys, and four user/host programmable (soft) keys.

4-1.4.3 Screen Display. The maintenance terminal provides four different screen displays. The screen sizes are as follows:

- 80 columns by 24 lines
- 132 columns by 24 lines
- 80 columns by 42 lines
- 132 columns by 42 lines

While in split screen mode, there are two additional display sizes; 80 columns by 49 lines, and 132 columns by 49 lines.

The screen display can be selected from the setup configuration menu.

4-1.4.4 Terminal Operation.

4-1.4.4.1 Cursor Control Keys.

4-1.4.4.1.1 Cursor Up (↑) Key. When you press the cursor up key, the terminal transmits the cursor up multicode to the host computer and moves the cursor up one line. If you press the cursor up key when the cursor is positioned at line 1, the cursor wraps to the last display line.

4-1.4.4.1.2 Cursor Down (↓) Key. When you press the cursor down key, the terminal transmits the cursor down multicode to the host computer and moves the cursor down one line. If you press the cursor down key when the cursor is positioned at last display line, the cursor wraps to line 1.

4-1.4.4.1.3 Line Feed. If you disable SEND CRSR, EDIT in setup configuration mode, pressing the cursor down arrow transmits a line feed code (ASCII LF character (X′OA′)) and moves the cursor to the same column position on the next line. The action does not occur when the terminal is configured for full duplex mode. If you enable SCROLL under the MODE heading in setup configuration mode, no attributes exist on the screen, and the cursor is at the last display line, the screen will scroll. If you disable SCROLL in setup configuration mode, the cursor wraps to the same column position on line 1. The operation of this key is controlled in setup configuration mode by CURSOR, EDIT KYS under the headings of KBD CTRL and KBD LOCK.

4-1.4.4.1.4 Cursor Right (→) Key. When you press the cursor right key, the terminal transmits the cursor right multicode to the host computer and moves the cursor one position to the right. If

you press the cursor right key when the cursor is positioned at the right margin, the cursor wraps to column 1 of the following line.

4-1.4.4.1.5 Cursor Left (←) Key. When you press the cursor left key, the terminal transmits the cursor left multicode to the host computer and moves the cursor one position to the left. If you press the cursor left key and the cursor is positioned at the left margin, the cursor wraps around to the right margin on the previous line.

4-1.4.4.1.6 <Home> Key. When you press the <Home> key, the terminal transmits the home multicode to the host computer. If you press the <Home> key, local cursor movement occurs and the cursor moves to line 1, column 1 in conversational mode. If you press the <Home> key on a formatted screen, the terminal positions the cursor in the first unprotected position on the screen.

4-1.4.4.2 Numeric Keypad Control Keys. The numeric keypad is similar to the layout of an adding machine and includes keys for numbers 0 through 9, comma, underline, period, and enter.

4-1.4.4.3 Dedicated Control/Function Keys.

4-1.4.4.3.1 <Shift> Key. When you press the <Shift> key, the terminal translates all alphabetic characters to upper case and all other numeric and punctuation characters to the character indicated on the upper half of the key cap. The <Shift> key does not affect the characters in the numeric keypad area of the keypad.

4-1.4.4.3.2 Cap Lock (<Lock>) Key. When you press the <Lock> key, the terminal forces all lower case alphabetic characters to upper case. The LOCK indicator lights when you press this key and remains lit until the key is pressed again to exit the cap locking function. All keys other than alphabetic keys are unaffected by the cap locking function.

4-1.4.4.3.3 <Space> Key. When you press the <Space> key, the terminal shifts the cursor one position to the right and the terminal writes the ASCII space character (X′2Ø′) to memory for the previous cursor position.

4-1.4.4.3.4 <Tab> Key. When you press the <Tab> key in conversational mode (when data is entered, it is sent directly to host computer), the terminal transmits an ASCII HT character (X′Ø9′) to the host computer and moves the cursor right to the next previously defined position. When you press the <Tab> key in block mode, the terminal moves the cursor to the right to the next previously defined position, which is either a tab stop or the first data character of an unprotected field. The operation of this key is controlled in setup configuration mode by TAB BACKTAB option under the headings KBD CTRL and KBD LOCK.

4-1.4.4.3.5 <Backtab> Key. If you press the <Backtab> key (or a <Shift> <Tab> sequence) and you enable the TAB BACKTAB option under the KBD CTRL and KBD LOCK headings in setup configuration mode, and BACKTAB option under mode heading, the terminal transmits an ASCII HT character (X′Ø9′) and moves the cursor to the previous tab stop. The first data character of an unprotected field is also a tab stop. If the NEW LINE option is disabled in setup configuration and you press the <Backtab> key, the cursor stops when it encounters column 1 of the current line, with the exception of the cursor stopping at the home position on a formatted screen with no tab stops set. If the NEW LINE option is enabled in setup configuration and you press the <Backtab> key, the cursor moves to the last tab stop of the previous line when it encounters column 1 of the current line and the cursor stops when it reaches the home position.

The operation of this key is controlled in setup configuration mode by the TAB BACKTAB option under the headings KBD CTRL and KBD LOCK.

4-1.4.4.3.6 Escape (<Esc/Loc Esc>) Key. If you press the <Esc> key, the terminal generates a special control character (normally ASCII ESC character (X′1B′) which is defined by the MULTICODE CHAR option under the SPCL CHAR heading in setup configuration mode. The multicode character is followed by one or more characters which enable special terminal control operations.

If you simultaneously press the <Shift> and <Esc> keys followed by multicode function characters, the terminal processes a local multicode function: i.e., the terminal acts upon the multicode function but the terminal does not transmit the multicode sequence to the host computer.

The operation of this key (unshifted) is controlled by ESC under the headings KBD CTRL and KBD LOCK in setup configuration.

**CAUTION**

Pressing the <Esc/Loc Esc> key when in application terminal mode may cause keyboard lockup and should not be used.

4-1.4.4.3.7 Backspace (<Back Space>) Key. The cursor moves one position to the left as long as the cursor remains in an unprotected field. If you press the <Back Space> key in conversation mode, the terminal transmits an ASCII BS character (X′Ø8′) to the host computer in conversational mode. Cursor movement stops at column 1 when no mode options are enabled. If you press the <Back Space> key when the cursor is at column 1 of a line with NEW LINE enabled under the MODE heading in setup configuration, the cursor wraps around to the right margin of the previous line. The cursor does not move beyond the home position.

4-1.4.4.3.8 <Return> Key. If you press the <Return> key in conversation mode with AUTO LINEFEED disabled under the MODE heading in setup configuration, the terminal transmits carriage return code (ASCII character CR (X′ØD′)). If you press the <Return> key in block mode with RETURN=SEND enabled, the terminal transmits the screen data as send line, send message, or send page, as defined in setup configuration mode. If you simultaneously press <Return> key in block mode with RETURN=SEND disabled, the terminal performs a local carriage return, but does not transmit the carriage return to the host computer.

The operation of this key is controlled by the RETURN=SEND option, and CR,LF under headings KBD CTRL and KBD LOCK in setup configuration.

4-1.4.4.3.9 <Send> Key. If you press the <Send> key (shifted and unshifted) in block mode (request to send operations) the terminal transmits the request to send terminator, which is defined under the TERMINATOR heading in setup configuration, followed by an attention identified (AID) character indicating the send condition (line, message, or page), followed by the request to send terminator which is defined under TERM heading in the setup menu. If the <Send> key is depressed in conversation mode, no function is performed.

4-1.4.4.3.10 Reset (<Reset/Setup>) Key. If you press the <Reset> key while the terminal is on-line, the terminal clears the error conditions in the status line. If you press the <Reset> key (in

6312 terminal emulation) and the status line is disabled in setup configuration and the status line is displayed due to an error, the terminal clears to the status line. If you press the <Reset> key while the terminal is in setup configuration mode, the terminal displays `SAVE ALL (Y/N)?`. Enter Y to save the setup configuration in RAM and electronically alterable read only memory (EAROM) and exit setup configuration mode and go on-line when PWR UP ON LINE* is enabled under the SYSTEM heading in setup configuration. The <Reset> key does not clear a keyboard lock condition initiated from the host computer. Press any key other than Y to exit setup configuration without saving. In this case, the change made to the setup configuration are in effect; however, they will be lost if the terminal is reset or powered down.

If you press the <Shift> key in conjunction with the <Reset> key (resulting in the setup function), the terminal forces the screen off-line, forces DTR inactive, and enters setup configuration mode. Press the <Reset> key (unshifted) to exit setup configuration mode and return the terminal to an on-line condition when PWR UP ON LINE is enabled under the SYSTEM heading in setup configuration.

If you press the <Ctrl> and <Shift> keys in conjunction with the <Reset> key, the terminal performs a power down reset. Do not do this in applications terminal mode. The screen clears and cannot be redisplayed.

4-1.4.4.3.11 Clear (<Clear/Local>) Key. If you press the <Clear> key, the terminal clears all data on the screen and in display memory, including the message field of the status line, to nulls or spaces as defined in the CLEAR TO SPACES option in setup configuration mode and returns the cursor to the home position. Tab stops reset to default positions (every eighth column). The <Clear> key does not clear a keyboard lock condition initiated from the host computer. The terminal terminates any multicode sequences initiated from the keyboard and still in progress; e.g., if you enter a multicode sequence prior to receiving a clear transmission (multicode K) from the host computer. If you press the <Clear> key and enable the SEND CLEAR ALL option in setup configuration mode, the terminal transmits a request to send sequence (multicode R) to the host computer and the keyboard locks. The screen data is not cleared and the keyboard remains locked until the host computer responds with a read sequence. If you press the <Shift> key in conjunction with the <Clear> key (resulting in the Local function), the terminal goes off-line (local). When the terminal is in local mode, the terminal forces DTR inactive and pressing the <Shift> key and <Clear> key again brings the terminal back on-line.

4-1.4.4.3.12 Break (<Break/Port>) Key. If you press the <Break> key, the terminal forces the communication transmit line to a space which remains for 350 ms ±10%.

When the VIRTUAL MODE option in setup configuration mode is set to ON or SPLIT, and you simultaneously press the <Shift> and <Break> keys, the sequence functions as the <Port> key. If you press the <Port> key, the terminal activates communications with the alternate port and the screen display switches to the new active port. If you press the <Port> key when the terminal is set to the SPLIT option with a 50-line display screen, the top 24 lines display the main port (port A), while lines 26 through 49 display the auxiliary port (port B). Lines 25 and 50 are the respective port status lines. DTR remains active on both ports, as long as the terminal is powered up, on-line and not in setup configuration mode.

4-1.4.4.3.13 Delete (<Del>) Key. If you press the <Shift> key in conjunction with the <Del> key, the terminal transmits the Del character (X′7F′) to the host computer and deletes the line on which the cursor is located.

4-1.4.4.3.14 <Page> Key. If you press the <Shift> key in conjunction with the <Page> key, the terminal switches to the alternate page. The terminal preserves the cursor position and attributes.

4-1.4.4.3.15 <Print> Key. If you press the <Shift> key in conjunction with the <Print> key, the terminal transmits screen data (line, message or page) to the auxiliary port defined in setup configuration mode. The terminal converts all nulls to spaces and transmits all nondisplayed fields as spaces unless the terminal is in program mode or when attributes are disabled via the multicode sequence.

4-1.4.4.3.16 <Scroll> Key. If you press the <Shift> key in conjunction with the <Scroll> key, the terminal stops the further display of data, performs required handshaking (following 75% of the terminal's internal 1 kb receive buffer being filled, as defined in setup configuration mode), and informs the host computer that no further data can be accepted. The terminal displays `HLD` in columns 74 through 76 of the status line and lights the HOLD SCREEN indicator on the keyboard. If you press the <Scroll> key a second time, the terminal resumes normal operations and informs the host computer.

4-1.4.4.3.17 Insert Character (<Line Insert Char>) Key (unshifted). If you press the <Line Insert Char> key, the terminal allows insertion of alphanumeric characters at the current cursor position. The character at the cursor position and the characters to the right of the cursor shift one position to the right for each character inserted.

Characters at the right margin wrap to column 1 of the following line.

The terminal inserts shifted characters (other than spaces and nulls), so that the characters do not intrude on another field or the end of the screen. Either of these conditions generates a keyboard lock and displays `INPUT ER` in the error indicator field of the status line.

If CLEAR TO SPACES is disabled for your terminal setup configuration, the right shift removes the first null character encountered.

If CLEAR TO SPACES is enabled for your terminal, the right shift removes the space/null character at the end of the field on a formatted screen or the end of the screen, but not the status line.

The terminal displays `INS` in columns 78 through 80 of the status line.

The operation of this key is controlled in setup configuration mode by the CURSOR, EDIT KYS option under the headings KBD CTRL and KBD LOCK and the SEND CRSR, EDIT option.

4-1.4.4.3.18 Insert Line (<Line Insert Char>) Key. If you press the <Shift> key in conjunction with the <Line Insert Char> key, the terminal inserts a line of nulls or spaces (as defined in setup configuration mode) at the current cursor position. All data on or below the current line moves down one line. The last line or field on the display is lost. If you use this key sequence on a formatted screen, the operation is confined to the current field, provided enough room is available (sufficient null/space lines at the end of the field) and no attributes are contained on the line. The

terminal displays INPUT ER messages in the error indicator field of the status line, if you violate the above constraints.

The operation of this key is controlled in setup configuration mode by CURSOR, EDIT KYS under the headings KBD CTRL and KBD LOCK and the SEND CRSR, EDIT option.

4-1.4.4.3.19 Erase Line/Page (<Page Erase Line>) Key. If you press the <Page Erase Line> key (unshifted), the terminal clears the line to nulls or spaces (as defined by CLEAR TO SPACES option in setup configuration mode) from the cursor to the end of the line. If you press the <Page Erase Line> key on a formatted screen, the terminal clears all unprotected characters in the field from the present cursor position to the first field attribute character encountered on the screen. If you press the <Shift> key in conjunction with the <Page Erase Line> key, the terminal clears all unprotected characters from the present cursor position to the end of the screen.

The operation of this key is controlled in setup configuration mode by CURSOR, EDIT KYS under the headings KBD CTRL and KBD LOCK and the SEND CRSR, EDIT option.

4-1.4.4.3.20 Delete Character (<Line Delete Char>) Key. If you press the <Line Delete Char> key (unshifted), the terminal deletes the character under the cursor and moves all remaining characters on the screen one character to the left, unless the cursor encounters an attribute byte. If characters are shifted to left of column 1, the characters wrap to the last column position of the previous line. The trailing edge of this left shift movement generates nulls or spaces (as defined in setup configuration mode) in the vacated positions.

The operation of this key is controlled in setup configuration mode by CURSOR, EDIT KYS under the headings KBD CTRL and KBD LOCK and the SEND CRSR, EDIT option.

4-1.4.4.3.21 Delete Line (<Line Delete Char>) Key. If you press the <Shift> key in conjunction with the <Line Delete Char> key, the terminal deletes the line where the cursor is currently located. All lines below the cursor move up one line on an unformatted screen. If you use this key sequence on a formatted screen, the terminal moves all lines within the field (up to the attribute byte of the next field) up one line. The terminal clears the last line of the screen to nulls or spaces, as defined by the CLEAR TO SPACES option in setup configuration mode. If you attempt to delete a line containing an attribute character, the terminal generates a keyboard lockout and displays the INPUT ER message in the error indicator field of the status line.

The operation of this key is controlled in setup configuration mode by CURSOR, EDIT KYS under the headings KBD CTRL and KBD LOCK and the SEND CRSR, EDIT option.

4-1.4.4.3.22 Page Edit/Insert Mode (<Pg Edt Insert Mode>) Key. If you press the <Pg Edt Insert Mode> key (unshifted), the terminal moves the character under the cursor and all following characters on the line one position to the right. The terminal replaces the vacated position with a null or space, as defined by the CLEAR TO SPACES option in setup configuration mode. The terminal discards any null or space character at the right margin or prior to a field attribute character. You may insert characters, so that shifted characters (other than spaces or nulls) do not intrude on another field or the end of the line (for an unformatted screen). For either of these conditions, the terminal generates a keyboard lockout and displays INPUT ER in the error indicator field of the status line.

If you press the <Shift> key in conjunction with the <Pg Edt Insert Mode> key, the terminal performs the same operation as in insert mode, except that the character at the right margin wraps to column one of the next line. The terminal displays `INPUT ER` in the error indicator field of the status line only when shifted characters (other than nulls or spaces) attempt to intrude on another formatted field or the end of the screen.

The operation of this key is controlled in setup configuration mode by CURSOR, EDIT KYS under the headings KBD CTRL and KBD LOCK and the SEND CRSR, EDIT option.

4-1.4.4.3.23 Auto Repeat Feature. Any key pressed for a minimum of one second causes a continuous stream of that character to be repeated at a rate of 15 characters per second until that key is released. The following keys are not included in the auto-repeat feature:

- <Break/Port>
- <Cap Lock>
- <Clear/Local>
- <Reset/Setup>
- General Function Keys (<F1> - <F16>)
- <Ctrl>
- <LocEsc>
- <Pg Edt Insert Mode>
- <Page>
- <Shift>

4-1.4.5 Operator Testing. The following procedure is used to perform a functional testing of the terminal.

1. Set the terminal POWER switch to the **ON** position. Allow a minute or so for the terminal to warm up.
2. Enter the local mode by **simultaneously** pressing the **<Shift>** and **<Local>** keys.
3. Adjust the screen contrast (impacts low intensity fields) and brightness as desired, using the appropriate knobs on the right side of the terminal.
4. Press each key from 1 to Ø on the top row and each key on the numeric pad on the right in sequence, verifying the correct display of the selected character. Continue this procedure with the alphabetic keys (A-Z), both shifted and unshifted, and the punctuation characters.
5. Use the **<Home>** key to move the cursor to the top left of the screen. Press each of the other cursor keys to verify correct option.

6. Enter monitor mode by **simultaneously** pressing **<Shift>**, **<Ctrl>**, **1** (on numeric keypad). If the screen displays e.g., an N and a U, then hold the **<Space>** bar down to enter space characters on the top line of the screen and press the **<Home>** key once more.

7. **Simultaneously** press the **<Ctrl>** key and ***** key. Then **simultaneously** press **<Ctrl>** key and the alphabetic keys **A** through **P**, **P** and **Q** through **Z**, and the following punctuation keys:

   **[, \, ], shift-^, shift-**
   The screen should display the following characters:
   N S S E E E A B B H L V F C S S D D D D D N S E C E S E G U
   U H X X T Q K L S T F T F R O I L 1 2 3 4 K Y B N M B C S S S S

8. Exit the monitor mode by **simultaneously** pressing **<Shift> <Ctrl> 1** keys.

9. Press the **<Clear>** key to clear the screen.

10. Exit local mode by entering **<Shift> <Local>**.

4-1.4.6 Configuration. The operation of the maintenance terminal is controlled by the configuration options in setup configuration mode. The terminal can be configured either by the operator via the keyboard or by the host computer through encoded ASCII sequences. Configuration by the host computer allows entries to the RAM for temporary use or to the electrically alterable read-only memory (EAROM) for permanent use. Configuration via the keyboard stores entries in RAM and/or EAROM depending on how you exit the setup menu (refer to paragraph 4-1.4.4.3.10 ).

4-1.4.6.1 Setup Configuration. The options in the Main Setup menu are grouped into categories according to function. The cursor control keys are used to move between fields. The <Tab> key moves the cursor between the columns. Simultaneously press the **<Shift>** and **<Setup/Reset>** keys to enter setup configuration and display the Main Setup menu. See Figure 6-50 for the Main Setup Menu and refer to paragraph 6-5.68.4 .

4-1.4.6.2 Option Categories (Parameters). A brief description of the parameters or options used in the setup configuration are provided in Table 4-1 and in the following paragraphs.

Table 4-1. Parameter Options

| Parameter | Default Value | System Console Port A Value | Applications Terminal Port B Value |
|---|---|---|---|
| KBD CTRL Parameters | | | |
| ESC | N | N | N |
| CURSOR, EDIT KYS | N | N | N |
| TAB BACKTAB | N | N | N |
| CR, LF | N | N | N |
| FØ1-FØ4 | N | N | N |
| FØ5-FØ8 | N | N | N |
| FØ9-F12 | N | N | N |
| F13-F16 | N | N | N |
| KBD LOCK Parameters | | | |
| ESC | N | N | N |
| CURSOR KYS | N | N | N |
| TAB BACKTAB | N | N | N |
| CR, LF | N | N | N |
| FØ1-FØ4 | N | Y | N |
| FØ5-FØ8 | N | Y | N |
| FØ9-F12 | N | Y | N |
| F13-F16 | N | Y | N |
| MODE Parameters | | | |
| SCROLL | Y | Y | Y |
| AUTO LINE FEED | N | N | N |
| AUTO TAB | Y | Y | Y |
| NEW LINE | Y | Y | Y |
| *UPPER CASE | N | N | N |
| *INVERSE VIDEO | N | N | N |
| *BLINK CURSOR | Y | Y | Y |
| *BLOCK CURSOR | Y | Y | Y |
| *KEY CLICK | N | N | N |

- - - - -

* The values picked for these parameters are not necessary for system operation nor are they downloaded by the processor to the applications port.

Table 4-1. Parameter Options (continued)

| Parameter | Default Value | System Console Port A Value | Applications Terminal Port B Value |
|---|---|---|---|
| MODE Parameters | | | |
| *SCREEN SAVE | Y | N | Y |
| *SMOOTH SCROLL | N | N | N |
| *BACKTAB KEY | N | N | N |
| SYSTEM Parameters | | | |
| SEND STAT LINE | Y | Y | Y |
| DSPLAY STAT LN | Y | Y | Y |
| PWR UP ON LINE | Y | Y | Y |
| RETURN=SEND | Y | N | Y |
| EXPERT | N | N | N |
| CLEAR TO SPACES | Y | Y | Y |
| SEND CRSR, EDIT | Y | Y | Y |
| SEND CLEAR ALL | N | N | N |
| COMM PARAMETERS | | | |
| BLOCK | N | N | N |
| *POLLED | N | N | N |
| ONE STOP BIT | Y | Y | Y |
| HALF DUPLEX | N | N | N |
| NULL SUPP UNFOR | N | Y | N |
| NULL SUPP FORMT | Y | Y | Y |
| XON/OFF | N | N | N |
| 113J | N | N | N |
| PRINTER Parameters | | | |
| LINE DRAWING | Y | N | Y |
| READY (-) | N | Y | Y |
| ONE STOP BIT | Y | Y | Y |
| COMM: Parameters | | | |
| COMM MODE | LINE | PAGE | PAGE |

- - - - -

* The values picked for these parameters are not necessary for system operation nor are they downloaded by the processor to the applications port.

Table 4-1. Parameter Options (continued)

| Parameter | Default Value | System Console Port A Value | Applications Terminal Port B Value |
|---|---|---|---|
| COMM: Parameters | | | |
| PARITY | EVEN | EVEN | EVEN |
| BAUD | 9600 | 9600 | 9600 |
| ACTIVE HOST/PRNT | A | A | B |
| PRNT: Parameters | | | |
| PRNT MODE | PAGE | PAGE | PAGE |
| PARITY | SPACE | SPACE | SPACE |
| BAUD | 300 | 300 | 300 |
| GNRL: Parameters | | | |
| EMULATION | 6312 | 6312 | 6312 |
| LANGUAGE | US | US | US |
| *VIRTUAL TERMINAL | Off | On | On |
| *LINES | 24 | 24 | 24 |
| *POUND CHAR | HASH | HASH | HASH |
| *BELL VOL | 2 | 1 | 1 |
| *RING BELL | 080 | 080 | 080 |
| *COLUMNS | 80 | 80 | 80 |
| TERM: Parameters | | | |
| SEND LINE | ExCnCnCn | ExCnCnCn | ExCnCnCn |
| FIELD | GsCnCnCn | GsCnCnCn | GsCnCnCn |
| UNFORMAT LINE | CnCnCnCn | CnCnCnCn | CnCnCnCn |
| UNFORMAT PG | ExCnCnCn | ExCnCnCn | ExCnCnCn |
| FORMAT PG | ExCnCnCn | ExCnCnCn | ExCnCnCn |
| REQ TO SEND | CnCnCnCn | CnCnCnCn | CnCnCnCn |
| PRINT LINE | CrLfCnCn CnCnCnCn | CrLfCnCn CnCnCnCn | CrLfCnCn CnCnCnCn |
| SPCL CHAR Parameters | | | |
| MULTICODE | Ec | Ec | Ec |

- - - - -

* The values picked for these parameters are not necessary for system operation nor are they downloaded by the processor to the applications port.

Table 4-1. Parameter Options (continued)

| Parameter | Default Value | System Console Port A Value | Applications Terminal Port B Value |
|---|---|---|---|
| SPCL CHAR Parameters | | | |
| POLL CHAR | A | A | Nu |
| PAUSE CHAR | D3 | D3 | D4 |
| RESUME CHAR | D1 | D1 | D2 |
| FUNCTION KEYS: Parameters | | | |
| TRANSMIT DELAY | NONE | NONE | NONE |
| ATTRIBUTE EFFECT | DELAYED | DELAYED | DELAYED |

- - - - -

* The values picked for these parameters are not necessary for system operation nor are they downloaded by the processor to the applications port.

4-1.4.6.2.1 Keyboard Control Options Category.

1. KBD CTRL Option. The Keyboard Control option provides protection from inadvertent activation of certain function keys.

   a. If you enter a Y (yes) in the inverse field of the KBD CTRL option on the Setup Configuration menu, all keys in the group (<F1> - <F16>), whether shifted or unshifted become control-protected. To activate this function, you must simultaneously press the <Ctrl> key along with the selected function key.

**NOTE**

All entries are made by pressing the <Space> bar to display the various options.

   b. If you enter an N (no) in the inverse field of the option, the key group is not control-protected.

2. KBD LOCK Option. The Keyboard Lock option renders inactive (locks) certain keys (<F1> - <F16>) which could have an adverse effect on the terminal if inadvertently pressed.

   a. If you enter a Y (yes) in the inverse field of the KBD LOCK option, there will be no action when you press either the unshifted or shifted keys in the group.

   b. If you enter an N (no) in the inverse field, you may use the keys in this key group.

4-1.4.6.2.2 MODE Options Category.

1. SCROLL Option. If you enable the Scroll option, the terminal scrolls the screen display after data is entered on the last line and is followed with a line feed. After

the line feed, the cursor returns to column 1 of the last line and line 1 is scrolled off the screen. If you disable this option, the cursor returns to column 1 of line 1 on the screen, after data is entered on the last line and followed with a line feed.

2. AUTO LINE FEED Option. If you enable the Auto Line Feed option, the cursor moves to column 1 of the next line when the <Return> key is pressed, or a carriage return (CR) code is received from the host computer. If the cursor is at the last line and you press the <Return> key, or a carriage return is received from the host computer, the screen scrolls up one line (if Scroll option is enabled). If you disable this option, the cursor moves to column 1 of the same line when the <Return> key is pressed or a carriage return is received from the host computer.

3. AUTO TAB Option. If you enable the Auto Tab option, the cursor automatically passes over protected fields and attribute characters. If you disable this option, you need to manually tab past protected field and attribute characters to access fields.

4. NEW LINE Option.

   a. If you enable the New Line option, entering or receiving a displayable character past column 80 generates an automatic line feed. This results in the same action described in the Auto Line Feed option described above. If you disable this option, attempting to enter data past column 80 overprints the characters at the right margin.

   b. If you disable the New Line option under the MODE heading in setup configuration, pressing the <Tab> key on an unformatted screen with no tab stops causes cursor movement to cease at the right margin of the current cursor line position. On a formatted screen with tab stops set, pressing the <Tab> key causes the cursor to stop at each tab stop and each unprotected field position and the cursor ceases movement at the right margin of the current cursor line position. On a formatted screen with no tab stops set, pressing the <Tab> key causes the cursor to wrap to the next line when it encounters the right margin and causes the cursor to wrap to line 1 when it encounters the right margin on the last display line. If there is only one unprotected field on the screen, pressing the <Tab> key acts the same as in the previous condition, except that the cursor stops when it encounters the last screen position. If you enable the New Line option under the MODE heading in setup configuration, pressing the <Tab> key on an unformatted screen with no tab stops set causes the cursor to move to the last screen position where the cursor stops. On an unformatted screen with tab stops, pressing the <Tab> key causes the cursor to stop at each tab stop, wraps to the next line when the cursor encounters the right margin and causes a scroll when the cursor encounters the right margin on the last screen line. On a formatted screen with no tab stops, pressing the <Tab> key causes the cursor to stop at each unprotected field position. This condition also causes the cursor to wrap to the next line when it encounters the right margin on the last display line. If there is only one unprotected field on the screen, pressing the <Tab> key acts the same as in the previous condition, except that the cursor

stops when it encounters the last screen position. On a formatted screen with tab stops, pressing the <Tab> key causes the cursor tab stop, the first unprotected position of a field, wrap to the beginning of the next line when the cursor encounters the right margin and wrap to the first tab stop/unprotected position of a field on line one when the cursor encounters the last screen position.

5. UPPER CASE Option. If you enable the Upper Case only option, the terminal converts lower case alphabetic characters typed at the keyboard to their upper case counterparts. However, lower case characters received via the communications line from the host computer are not affected by this option. If you disable this option, lower case characters typed at the keyboard remain in lower case.

6. INVERSE VIDEO Option. If you enable the Inverse Video option, dark characters are displayed on a light background. If you disable this option, light characters are displayed on a dark background. This is normal mode of operation.

7. BLINK CURSOR Option. If you enable the Blink Cursor option, the cursor blinks continuously. The blink cycle is 500 ms ±20%. If you disable this option, the cursor does not blink.

8. BLOCK CURSOR Option. If you enable the Block Cursor option, the cursor appears as an inverse video block. If you disable this option, the cursor appears as an inverse video underline character.

9. KEY CLICK Option. If you enable the Key Click option, an audible click occurs when you press any key on the keyboard. If you disable this option, keyboard operation is silent.

10. SCREEN SAVE Option. If you enable the Screen Save option, the screen blanks after approximately 15 minutes of inactivity; however, the screen memory remains intact. Any keyboard operation or host communication restores the screen. To restore the screen without generating characters, press the <Shift> and <Setup> keys. If you disable this option, characters remain displayed on the screen.

11. SMOOTH SCROLL Option. If you enable the Smooth Scroll option, characters are vertically scrolled by scan line. If you disable this option, an entire character line is scrolled.

12. BACKTAB KEY Option. If you enable the Backtab Key option, the cursor moves to the previous tab stop whenever you press the separate <Backtab> key.

4-1.4.6.2.3 System Options Category.

1. SEND STAT LINE Option. See the Block option in this section to set communications with the host computer to block or conversational mode. If you enable the Send Status Line option:

   a. Block mode allows communications from the status line to host computer.

   b. Conversational mode sends data to the host computer on a character-by-character basis.

If you disable this option, there is no communications with the host computer from the status line.

2. DSPLAY STAT LN Option. If you enable the Status Line Display option, the screen displays the status line on line 25 (if split screen) or 42 (if full screen). If you disable this option, the screen does not display the status line except under the following conditions:

   a. Upon entering the screen program mode

   b. Upon entering the configuration mode

   c. Whenever a terminal error occurs

3. PWR UP ON LINE Option. If you enable the Power Up On Line option, the terminal goes on-line upon power-up or exiting setup configuration. If you disable this option, the terminal is in local mode upon power-up or exiting setup configuration.

4. RETURN=SEND Option. If you enable the Return=Send option, the <Return> key operates as a Send key in block mode by transmitting data to the host computer. If you disable this option, the terminal transmits no data and the cursor is placed at the beginning of the next line when you press the <Return> key. The Return=Send option does not affect the terminal in conversational mode.

5. CLEAR TO SPACES Option. If you enable the Clear to Spaces option, the terminal clears the screen to spaces. If you disable this option, the terminal clears the screen to null characters.

6. SEND CRSR, EDIT Option. If you enable the Send Cursor, Edit keys option, the terminal transmits the associated multicode sequence to the host computer. The host computer then provides the appropriate command for the desired action to occur. For example, if you press the cursor up key (upper arrow), the terminal transmits a multicode (Esc) A sequence to the host computer. The host computer typically responds by transmitting a multicode (Esc) A sequence back to the terminal to move the cursor up one line. If you disable this option, pressing the cursor and edit keys causes the action to occur locally at the terminal; the terminal does not notify the host computer that the cursor moves.

7. SEND CLEAR ALL Option. If you enable the Send Clear All Option, the terminal transmits a request to clear all multicode (Esc) R_ sequence to the host computer when you press the <Clear> key. After the host computer responds with a read request, the terminal is placed in block mode and the screen is cleared. If the host computer does not respond with a read request, the screen is not cleared. If you disable this option, simultaneously press the <Shift> and <Clear> keys to clear the screen. The terminal does not notify the host computer that the screen clears.

4-1.4.6.2.4 Communications Options Category.

1. BLOCK Option. If you enable the Block mode option, the terminal enters block mode following power-up or upon exiting setup configuration mode. Block mode

transmission (entire blocks of data) occurs when you press the <Send> key, a general function key programmed with the send function, or the <Return> key and Return=Send is enabled in setup configuration. If you disable this option, the terminal operates in conversational mode, and the terminal transmits data to the host computer on a character-by-character basis as soon as you press a key.

2. POLLED Option. If you enable the Polled environment option, the terminal functions in a polled environment. In this environment, the host computer relates to each terminal on an individual basis allowing several terminals to share one communications line to the host computer. The host computer may issue a general broadcast, group notification, or directly poll your terminal. In order for the terminal to operate in a polled environment, you must also set the polling character (POLL CHAR) parameter.

**NOTE**

Ensure that the host computer is configured properly to use your terminal in the polled environment.

If you disable this option, the terminal does not operate in a polled environment.

3. ONE STOP BIT Option. Used to signal the end of each character the transmitter received during an asynchronous communication. This option allows you to select/unselect (Y/N) the one stop bit parameter.

4. HALF DUPLEX Option. If you enable the Half Duplex option, the terminal operates in half duplex mode with the host computer and communication only occurs in one direction at a time. Echoplex is not required in half duplex mode; the screen displays queries and acknowledgements from both the host computer and the keyboard as received or entered. However, if the host computer and keyboard generate data simultaneously, the display shows intermixed characters. If you disable this option, the terminal operates in full duplex mode with the host computer and communication occurs in both directions simultaneously. Data transmitted through the keyboard does not appear on the screen unless the host computer is programmed to echo back the characters (Echoplex).

5. NULL SUPP UNFOR Option. If you enable the Null Suppression on Unformatted Screen option and transmit an unformatted screen, the terminal suppresses null characters (not transmitted to the host computer). This option is usually used with the Clear to Spaces option disabled. If you disable this option, the transmission of an unformatted screen does not suppress null characters.

6. NULL SUPP FORMT Option. If you enable the Null Suppression on Formatted Screen option and transmit a formatted screen, the terminal suppresses null characters, (not transmitted to the host computer). This option is usually used with the Clear to Spaces option disabled. If you disable this option, the transmission of a formatted screen does not suppress null characters.

7. XON/OFF Option. If you enable the XON/XOFF option, the host computer may send the XOFF character (as defined by the PAUSE character) to the terminal to

pause transmission from the terminal. The terminal will make no further transmission until it receives an XON character (as defined by the RESUME character). If you disable this option, the host computer cannot pause transmission from the terminal.

8. 113J Option. If you enable the 113J option, the carrier on (CF) signal (pin 8) is ignored and treated as always active, so that the terminal operates in conjunction with 113J and 103J type modems. If you disable this option, the CF signal is obeyed. Data received from the host computer is ignored if the CF signal (pin 8) is not present.

9. COMM MODE Option. Enter LINE, MSG, or PAGE in the inverse field of this option to designate the type of send condition by scrolling through the available choices with the <Space> bar. The option affects operation of the terminal in block mode transmissions and has no affect on terminal operation in conversational mode.

   a. If you designate the send condition as LINE, the terminal transmits the line of data on which the cursor is located to the host computer when you press the <Send> key (or <Return> or <Enter> key when the Return=Send option is enabled in setup configuration).

   b. If you designate the send condition as MSG, the terminal transmits all fields preceded by an attribute to the host computer when you press the <Send> key (or <Return> or <Enter> key when the Return=Send option is enabled in setup configuration), starting from the Home position up to and including the field where the cursor is located, and subsequently from the end of the last message to the current cursor position.

   c. If you designate the send condition as PAGE, the terminal transmits an entire screen of data to the host computer when you press the <Send> key (or <Return> or <Enter> key when the Return=Send option is enabled in setup configuration).

10. PARITY Option. Enter ODD, EVEN, MARK, SPACE, or NONE in the inverse field of the option to designate the desired parity type by scrolling through the available choices with the <Space> bar.

11. BAUD Option. The following baud rates are available on the terminal: 110, 300, 600, 1200, 2400, 4800, 9600, 19.2K, or 38.4K bps. Enter the desired baud rate in the inverse field of the option by scrolling through the available choices with the <Space> bar.

**NOTE**

The baud rate selected for this option must match the baud rate of the host computer.

12. TRANSMIT DELAY Option. The Transmit Delay function allows you to select the transmit rate of multicharacter edit and function keys. This option may be required

for use with the host computer, especially with host computer software expecting characters entered from the keyboard at a human operator speed and therefore cannot handle the terminals ending a block of data at the full baud rate. If you select NONE, pressing a multicharacter edit or function key transmits the stream of data bits at the selected baud rate used in the Baud option. If you select 100 cps, pressing a multicharacter edit or function key transmits the stream of data bits at the selected baud rate, but the terminal inserts a transmission delay between the characters so the effective transmission rate equals 100 characters per second. Enter NONE or 100 cps in the inverse field of this option by scrolling through the available choices with the <Space> bar.

13. EMULATION Option. Enter 6312, VT220, VT100, or WY60 in the inverse field of this option by scrolling through the available choices with the <Space> bar to designate the emulation environment desired for your terminal.

14. ACTIVE HOST/PRNT Option. The terminal contains two independent RS-232 interface ports (A and B) for communications with two host computers. Enter A or B in the inverse field of the option by scrolling through the available choices with the <Space> bar to designate the desired active host port.

15. VIRTUAL TERMINAL Option. Enter OFF, ON, or SPLIT in the inverse field of this option to designate virtual terminal status by scrolling through the available choices with the <Space> bar.

    a. If you designate this option as OFF, the terminal transmits and receives data via host port A only and the B port may be used as the printer port.

    b. If you designate this option as ON, the terminal displays communications via the selected active port. If the status line is enabled in setup configuration, the status line displays the active port.

    c. If you designate this option as SPLIT, lines 1 through 24 display communications via the main port (port A) and lines 26 through 49 display communications via the auxiliary port (port B). Lines 25 and 50 are the respective port status lines.

4-1.4.6.2.5 Printer Port Options Category.

1. LINE DRAWING Option. If you enable the Line Drawing option, the terminal transmits attribute and graphics characters to the printer. If you disable this option, the terminal converts attribute and graphics characters to spaces and transmits them to the printer.

2. READY (-) Option. The Ready option determines whether the voltage level that indicates a ready state is plus or minus for the print device. If you enable the ready option, the ready state is a minus; i.e., clear to send (CTS) is low for the ready state and high for the busy state. If you disable this option, the ready state is a plus; i.e., CTS is high for the ready state and low for the busy state.

3. ONE STOP BIT Option. Used to synchronize transmission of asynchronous characters by starting and stopping the transmitting of data.

4. PRNT MODE Option. Enter LINE, MSG, or PAGE in the inverse field of the option to designate the type of desired print condition by scrolling through the available choices with the <Space> bar.

   a. If you designate the print condition as LINE, the terminal transmits the line of data on which the cursor is located to the print device when you press the <Print> key.

   b. If you designate the print condition as MSG, the terminal transmits all fields preceded by an attribute to the print device when you press the <Print> key, starting from the Home position up to and including the field where the cursor is located, and subsequently from the end of the last message to the current cursor position.

   c. If you designate the print condition as PAGE, the terminal transmits an entire screen of data to the print device when you press the <Print> key.

5. PARITY Option. Enter ODD, EVEN, MARK, SPACE, or NONE in the inverse field of the option to designate the desired parity type by scrolling through the available choices with the <Space> bar.

6. BAUD Option. The following baud rates are available on the terminal: 110, 300, 600, 1200, 2400, 4800, 9600, 19.2K, or 38.4K bps. Enter your desired baud rate in the inverse field of the option by scrolling through the available choices with the <Space> bar.

4-1.4.6.2.6 Screen Display Options Category.

1. BRIGHTNESS Option. The Brightness control option determines the brightness of the display screen in single increments ranging from 1 to 16 (1 is the lowest setting, 16 is the brightest setting). You may also press the <Ctrl>, <Shift>, and cursor up or down key sequence respectively, to adjust the brightness of the terminal in on-line mode. The brightness change does not affect the configuration value of the brightness option. Enter the desired setting in the inverse field of the option by scrolling through the available choices with the <Space> bar.

2. CONTRAST Option. The Contrast control option determines the contrast of the display screen in single increments ranging from 1 to 4. A setting of 3 or 4 is desired to discern low intensity from normal fields. Enter the desired setting in the inverse field of the option by scrolling through the available choices with the <Space> bar.

3. COLUMNS Option. Enter 8Ø in the inverse field of the Columns option to designate the desired number of columns on the display screen by scrolling through the available choices with the <Space> bar.

4. LINES Option. Enter 24 in the inverse field of the Lines option to designate the desired number of lines on the display screen by scrolling through the available choices with the <Space> bar.

5. POUND CHAR Option. The Pound Sign Character option determines the character resulting from simultaneously pressing the <Shift> and 3 keys. Select HASH to generate the # character or STERLING to generate the character by scrolling through the available choices with the <Space> bar.

6. ATTRIBUTE EFFECT Option. If you select IMMEDIATE, the terminal displays video attributes as they are received. If you select DELAYED, the terminal displays video attributes only during an interruption of the data stream. Protected and nondisplayed fields always take effect immediately. Enter DELAYED or IMMEDIATE in the inverse field of this option by scrolling through the available choices with the <Space> bar.

4-1.4.6.2.7 Communication Terminator (TERM) Options Category. These options are enabled by entering one to four ASCII characters in the inverse field of the option. The CANCEL (Cn) character must be entered as the last character of this field. (CTRL and X = Cn). If no communications terminator is desired, enter four Cn characters in the inverse field of the option. If the currently configured setting is desired, tab to the next desired option.

**NOTE**

The Communication Terminator options are critical to operation with some host computer software. Refer to your software documentation for communication terminator options information.

1. SEND LINE Option. The terminal automatically appends this terminator to each line for the Send Line condition of both formatted and unformatted screens and for the transmission of a function key message that is already defined in the configuration. For example, ExCnCnCn is a send line terminator in the inverse field of this option. (<Ctrl> C keys = Ex).

2. FIELD Option. The terminal automatically appends this terminator to each field upon the transmission of formatted screens. For example, GsCnCnCn is a field terminator in the inverse field of this option. (<Ctrl> /] keys = Gs).

3. UNFORMAT LINE Option. The terminal automatically appends this terminator to each line for the send message and send page conditions upon the transmission of unformatted screens. For example, CnCnCnCn is an unformatted line terminator in the inverse field of this option.

4. UNFORMAT PG Option. The terminal automatically appends this terminator to each message or page for the send message or send page conditions upon the transmission of unformatted screens. For example, ExCnCnCn is an unformatted page terminator in the inverse field of this option.

5. FORMAT PG Option. The terminal automatically appends this terminator to each message or page for the send message or send page conditions upon the transmission of formatted screens. For example, ExCnCnCn is a formatted page terminator in the inverse field of this option.

6. REQ TO SEND Option. The terminal automatically appends this terminator to each transmission of a request to send multicode sequence and a transmission as a result

of a function key which is not defined in the configuration. For example, CnCnCnCn is a request to send terminator in the inverse field of this option.

7. PRINT LINE Option. The terminal automatically appends this terminator to each line of data transmitted through the printer port of the terminal. For example, CrLfCnCnCnCnCnCn is a print line terminator in the inverse field of this option. (<Ctrl> M keys = Cr, <Ctrl> J keys = Lf)

4-1.4.6.2.8 Special Character Options (SPCL CHAR) Category. Selection of these options can be made by entering a single ASCII character in the reverse video preceding the option.

1. MULTICODE Option. You must designate a multicode character to send or execute multicode sequences from the host computer. This key must correspond with the multicode character expected by the host computer. The <Esc> (escape) key is designated as the multicode character for the Mode 6312 terminal emulation. Enter the desired ASCII ESC character (<Ctrl> { ) in the inverse field of this option to designate the multicode character. (<Ctrl> { keys = Ec)

2. POLL CHAR Option. You must designate a polling character in order for the host computer to address your terminal in a polled environment. This key must correspond with the polling character expected by the host computer and configured in the host computer software. Enter the desired ASCII character in the inverse field of this option to designate the polling character. For example, Nu is an all zero character (<Ctrl> <Shift> @ = Nu)

**NOTE**

The POLL CHAR option only applies if the Polled option is enabled in setup configuration. See the Polled option under the communications options category earlier in this section.

3. PAUSE CHAR Option. The Pause Character option is used in two situations. When you press the <Scroll> key once, the terminal transmits the pause character to the host computer. When the terminal receives the pause character and the XON/OFF option is enabled, the terminal stops transmitting characters to the host computer. The ASCII characters DC3 or DC4 (<Ctrl> S keys = DC3; <Ctrl> T keys = DC4) are usually designated as the pause character, although you may use any ASCII character. Enter the desired ASCII character in the inverse field of this option to designate the pause character.

4. RESUME CHAR Option. The Resume Character option is used in two situations. When you press the <Scroll> key a second time, the terminal transmits the resume character to the host computer and when the terminal receives the resume character and the XON/OFF option is enabled, the terminal resumes transmitting characters to the host computer. If the terminal did not previously stop transmitting characters, the terminal ignores this key. The ASCII characters DC1 or DC2 (<Ctrl> Q keys = DC1; <Ctrl> R keys = DC2) are usually designated as the resume character, although you may use any ASCII character. Enter the desired ASCII character in the inverse field of this option to designate the resume character.

5. BELL VOL Option. The Bell Volume option determines the loudness of the terminal bell in single increments ranging from Ø to 2 (2 is the loudest setting). Select Ø to disable the terminal bell. Enter the desired setting in the inverse field of this option by scrolling through the available choices with the <Space> bar.

6. RING BELL Option. The Ring Bell option is equivalent to a typewriter bell that sounds just before the right margin is reached. When you enable the Ring Bell option, the terminal bell sounds when the cursor enters the designated column while entering data. Enter a three-digit column number (from ØØ1 to 132) in the inverse field of the option. Enter ØØØ in the inverse field of the option to disable the bell. Setting the Ring Bell option at a column number above 132 will disable the bell for the Ring Bell option, but the bell still responds upon receiving an ASCII BEL character (X′Ø7′).

4-1.4.6.3 Configuration Menus. There are additional individually selectable menus which display the setup functions of the terminal. You do not need to modify these category configuration menus if you select 6312 terminal emulation.

**NOTE**

If pressing the <Shift> and <Setup/Reset> keys simultaneously does not result in the display of the Main Setup Menu, the terminal may not be setup to emulate a 6312. Press the <F3> key and then press the <F2Ø> key to display the Main Setup Menu. If the Main Setup Menu is not displayed on the screen, press the <Ctrl> and <F3> keys simultaneously and then press the <F2Ø> key.

# Section 4-2. Controls and Indicators

4-2.1 GENERAL.

This section describes the external controls and indicators for the RDA Data Processor (RDADP) and Receiver Cabinets, and the Wideband Communications (WBC) Cabinet Assembly, as well as the interlocks for the RDA Group. Figures and tables are provided for locating and identifying the controls and indicators. The tables contain the following information:

**NOTE**

This section refers to the RDA Data Processor as UD5, the Receiver as UD4, the Transmitter as UD3 and the Waveguide Pressurization Unit as UD6. Unless otherwise specified, the information also applies to redundant systems UD105, UD104, UD103, and UD106.

4-2.1.1 Figure and Index No. Column. The Fig. and Index No. column numbers refer to the specific controls or indicators called out in the designated figure.

4-2.1.2 Control/Indicator Nomenclature Column. The Control/Indicator Nomenclature (Type) column lists panel nomenclature of the controls or indicators and their type.

4-2.1.3 Function Column. The Function column describes the purpose of each control or indicator.

4-2.1.4 Normal Position/State Column. Normal Position/State column lists the normal position/state of each control or indicator.

4-2.1.5 Description. For a detailed description of the controls and indicators for each RDA Group equipment refer to the applicable references listed below:

| RDA Group Equipment | Reference |
|---|---|
| Electrical Equipment Shelter UD1 | NWS EHB 6-550/NWS EHB 6-553** |
| Antenna/Pedestal UD2 | NWS EHB 6-513*/NWS EHB 6-514* |
| Radar Transmitter UD3 | NWS EHB 6-511 |
| Radar Receiver UD4 | In this section |
| RDA Data Processor UD5 | In this section |
| Waveguide Pressurization Unit UD6 | NWS EHB 6-512/NWS EHB 6-512-1 |
| RDA Shelter UD7 | NWS EHB 6-550/NWS EHB 6-553** |
| Generator Shelter UD10 | NWS EHB 6-550/NWS EHB 6-553** |
| Steel Tower UD11 | NWS EHB 6-550/NWS EHB 6-553** |
| Splice Tray Assembly UD14 | No controls or indicators |

- - - - -

* Site Dependent

** Redundant Sites

| RDA Group Equipment | Reference |
|---|---|
| MLOS Transceiver UD19/UD39 | NWS EHB 6-545 |
| Transition Power Maintenance Shelter (TPMS) UD60 | NWS EHB 6-550/NWS EHB 6-553** |
| TPMS Electric Toilet UD60A4 | NWS EHB 6-554-3 |
| TPMS Unit Heater UD60A7/UD60A8 | NWS EHB 6-554-4 |
| Transition Power Source (TPS) Service Manual, Powerware 9315-50 | NWS EHB 6-554-5 |
| TPMS COMPAC I/COMPAC II ECU | NWS EHB 6-554-6 |

- - - - -
* Site Dependent
** Redundant Sites

4-2.2 RADAR RECEIVER UD4.

The indicators for Radar Receiver UD4 are located on the front of each individual power supply. See Figure 4-1 and refer to Table 4-2 for a description of the receiver indicators.

4-2.3 RDA DATA PROCESSOR UD5.

The controls and indicators for RDA Data Processor UD5 (Figure 4-2 and Figure 4-3) are located on the following equipment:

- Maintenance Panel UD5A2
- Swingout Power Subsystem UD5PS5
- CDS Master Module UD5PS5A3
- RDA Maintenance Terminal UD5A4 (FAA) or RRRAT UD5A32/A38 (DOD/NWS)
- Pedestal Power Amplifier Unit UD5A7
- SCSI Assembly UD5A5
- VME Chassis UD5A1
- VME Wideband Boards UD5A1A2/A3
- VMEbus to Concurrent I/O Bus Interface Board (VCI-V) UD5A1A1
- VMEbus to Concurrent I/O Bus Interface Board (VCI-C) UD5A12A18
- Power Supply Assemblies UD5PS2 and UD5PS3
- AC Power Distribution Panel UD5A14
- Channel Service Unit (CSU) UD5A18

- Automatic Wideband Communication Switch UD5A19
- Statistical Multiplexer (STATMUX) UD105A20
- Dial Port Modem UD105A21
- A/B Switch and Dual A/B Switch UD5A17

4-2.3.1 Maintenance Panel UD5A2 Controls and Indicators. The maintenance panel is used to evaluate and control the RDA subsystem. Refer to Figure 4-4 and refer to Table 4-3 for a description of the maintenance panel controls and indicators.

4-2.3.2 Swing-Out Power Subsystem UD5PS5 Controls and Indicators. Refer to Figure 4-5 and refer to Table 4-4 for a description of the swing-out power subsystem controls and indicators.

4-2.3.3 CDS Master Module UD5PS5A3 Controls and Indicators. See Figure 4-6 and refer to Table 4-5 and Table 4-6 for a description of the CDS master module controls and indicators and LED status.

4-2.3.4 RDA Maintenance Terminal UD5A4 Controls and Indicators. The RDA maintenance terminal provides a visual display and keyboard control for interfacing with the RDA equipment. Refer to Figure 4-7 and refer to Table 4-7 for a description of the RDA maintenance terminal controls and indicators. (Refer to paragraph 4-1.4 for a detailed description of the terminal keyboard functions.)

4-2.3.5 Pedestal Power Amplifier Unit UD5A7 Controls and Indicators. Refer to Figure 4-8 and refer to Table 4-8 for a description of the pedestal power amplifier unit controls and indicators. Channel 1 RDA Cabinet (UD105) does not contain a Pedestal Power Amplifier.

4-2.3.6 SCSI Assembly UD5A5 Controls and Indicators. See Figure 4-9 and refer to Table 4-9 for a description of the SCSI assembly controls and indicators.

4-2.3.7 VME Chassis UD5A1 Controls and Indicators. See Figure 4-10 and refer to Table 4-10 for a description of the VME chassis controls and indicators.

4-2.3.8 VME Wideband Board UD5A1A2/A3 Controls and Indicators. See Figure 4-11 and refer to Table 4-11 for a description of the VME wideband board controls and indicators.

4-2.3.9 VMEbus to Concurrent I/O Bus Interface Board UD5A1A1 Controls and Indicators. See Figure 4-12 and refer to Table 4-12 for a description of the VMEbus to Concurrent I/O Bus Interface Board (VCI-V) controls and indicators.

4-2.3.10 VMEbus to Concurrent I/O Bus Interface Board UD5A12A18 Controls and Indicators. See Figure 4-13 and refer to Table 4-13 for a description of the VMEbus to Concurrent I/O Bus Interface Board (VCI-C) controls and indicators.

4-2.3.1 1 Power Supply Assemblies UD5PS2 and UD5PS3 Controls and Indicators. See Figure 4-14 and refer to Table 4-14 for a description of the power supply assemblies controls and indicators.

4-2.3.12 AC Power Distribution Panel UD5A14 Controls and Indicators. See Figure 4-15 and refer to Table 4-15 for a description of the AC power distribution panel controls and indicators.

4-2.3.13 Channel Service Unit (CSU) UD5A18 Controls and Indicators. See Figure 4-16 and refer to Table 4-16 for a description of the channel service unit controls and indicators. The Channel 1 RDA Cabinet (UD105) does not contain a CSU.

4-2.3.14 Automatic Wideband Communication Switch UD5A19 Controls and Indicators. See Figure 4-17 and refer to Table 4-17 for a description of the Automatic Wideband Communication Switch controls and indicators. Only National Weather Service (NWS) Channel 2 RDA Cabinet (UD5) redundant configurations contain this unit.

4-2.3.15 STATMUX UD105A20 Controls and Indicators. See Figure 4-18 and refer to Table 4-18 for a description of the STATMUX controls and indicators. Only NWS Channel 1 RDA Cabinet 1 (UD105) redundant configurations contain this unit.

4-2.3.16 Dial Port Modem UD105A21 (Standalone) Controls and Indicators. See Figure 4-19 and refer to Table 4-19 for a description of the dial port modem controls and indicators. Only NWS Channel 1 RDA Cabinet (UD105) redundant configurations contain this unit.

4-2.3.17 A/B Switch and Dual A/B Switch UD5A17 Controls and Indicators. All A/B Switches have one control and no indicators. The control is a manual switch with an “A” and “B” position. For the A/B switch, see Figure 4-20 and refer to Table 4-20 for a description of the controls. For the Dual A/B switch, see Figure 4-21 and refer to Table 4-22 for a description of the controls.

## 4-2.4 WIDEBAND COMMUNICATIONS CABINET ASSEMBLY UD19/UD39.

The controls and indicators for the wideband communications cabinet assembly are located on the Microwave Line-of-Sight (MLOS) Transceiver Cabinets UD19/UD39. Refer to NWS EHB 6-545, Figure 4-9 and Table 4-9 for a description of the MLOS transceiver controls and indicators.

## 4-2.5 INTERLOCKS.

The RDA interlocks are provided for the safety of the technician. Refer to Table 4-23 for interlock locations.

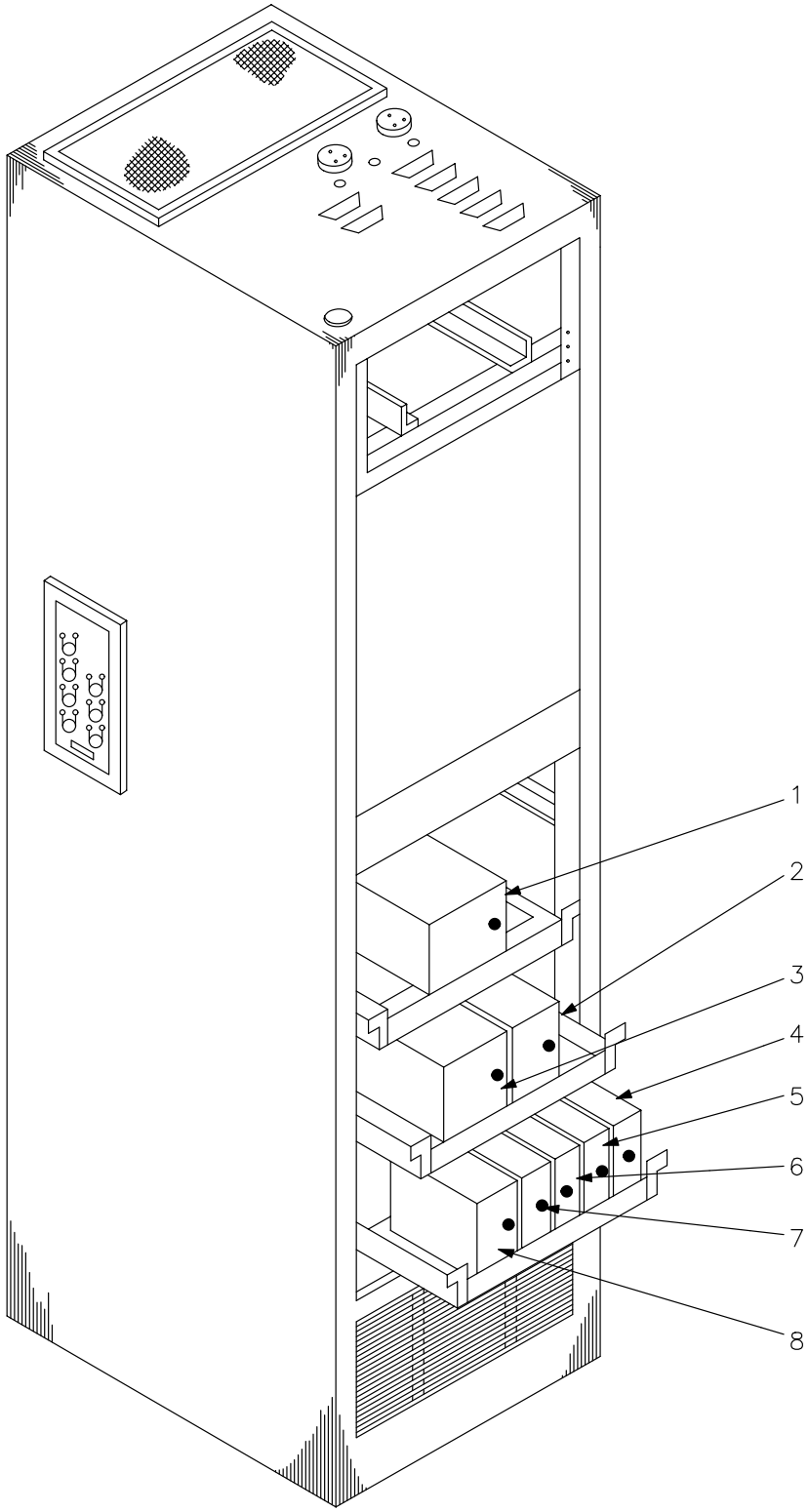


Figure 4-1. Receiver UD4, Front View

Table 4-2. Receiver UD4, Controls and Indicators

| Figure 4-1 Index No. | Control/ Indicator Nomenclature (Type) | Function | Normal Position/ State |
|---|---|---|---|
| 1 | ±18V PS1 (indicator) | When lit indicates 120 Vac is available to the power supply. | Lit |
| 2 | -9V PS4 (indicator) | When lit indicates 120 Vac is available to the power supply. | Lit |
| 3 | +5V PS5 (indicator) | When lit indicates 120 Vac is available to the power supply. | Lit |
| 4 | +5V PS9 (indicator) | When lit indicates 120 Vac is available to the power supply. | Lit |
| 5 | -5.2V PS7 (indicator) | When lit indicates 120 Vac is available to the power supply. | Lit |
| 6 | +9V PS6 (indicator) | When lit indicates 120 Vac is available to the power supply. | Lit |
| 7 | +5V PS2 (indicator) | When lit indicates 120 Vac is available to the power supply. | Lit |
| 8 | ±15V PS8 (indicator) | When lit indicates 120 Vac is available to the power supply. | Lit |

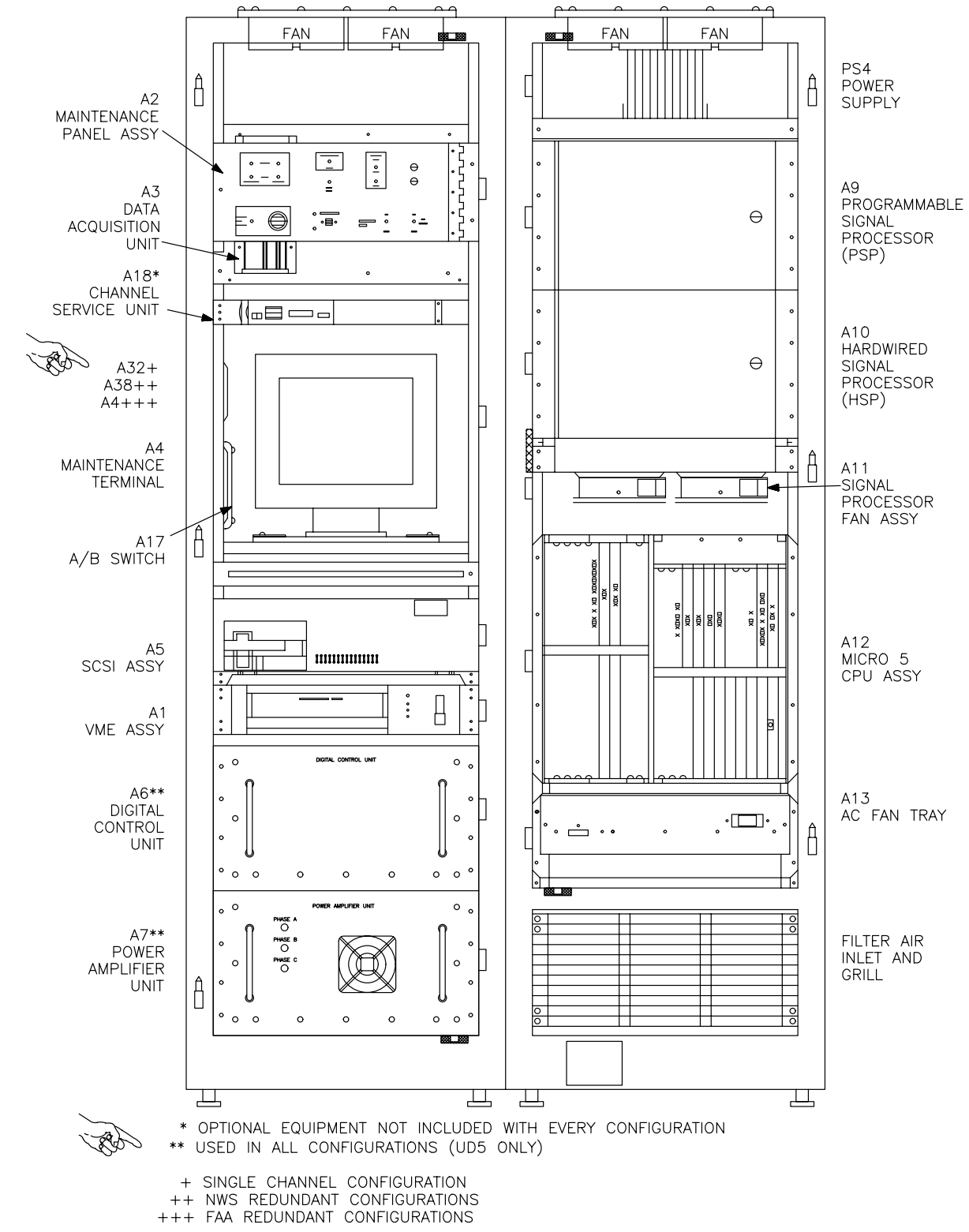


Figure 4-2. RDA Data Processor UD5, Front View

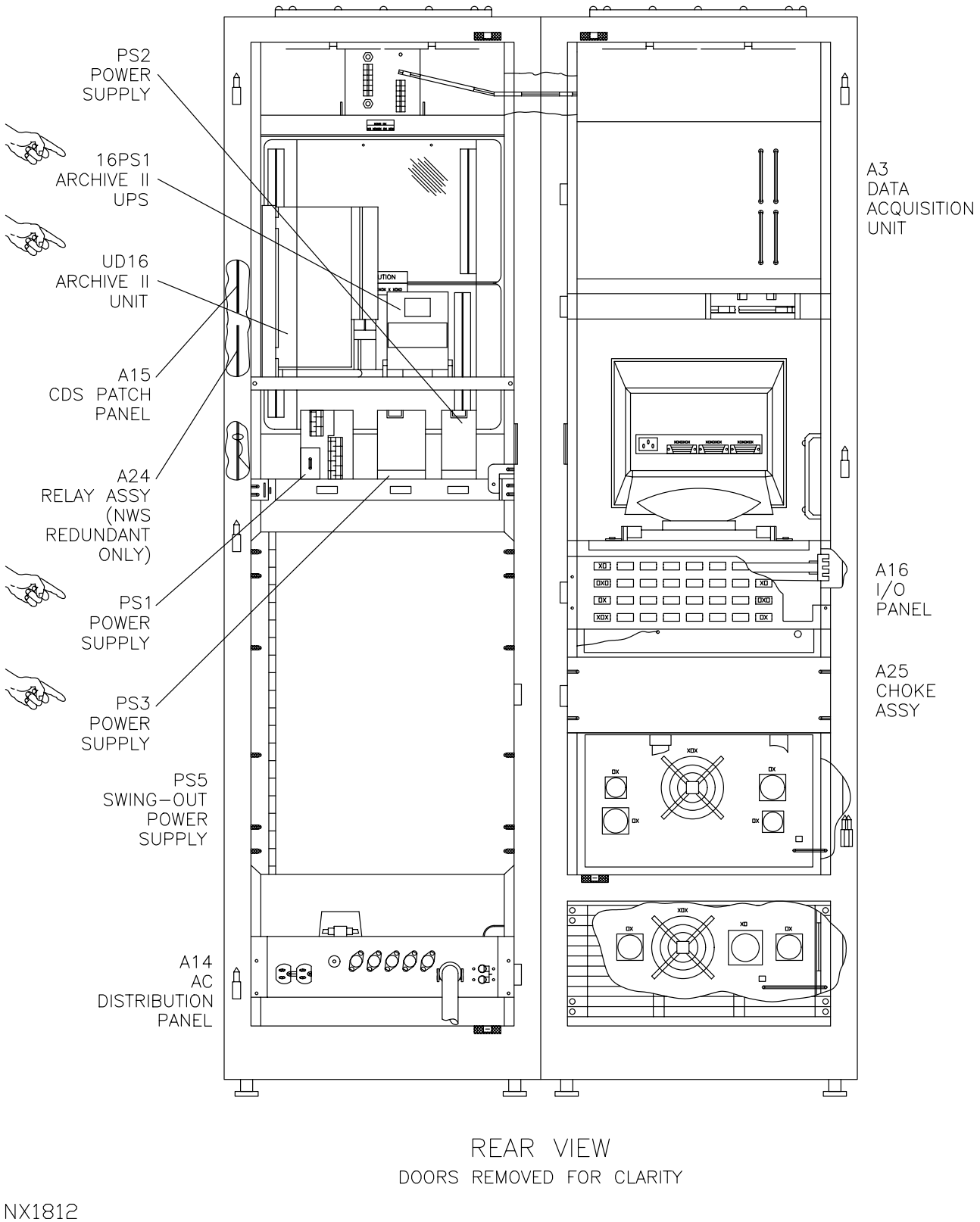


Figure 4-3. RDA Data Processor UD5, Rear View

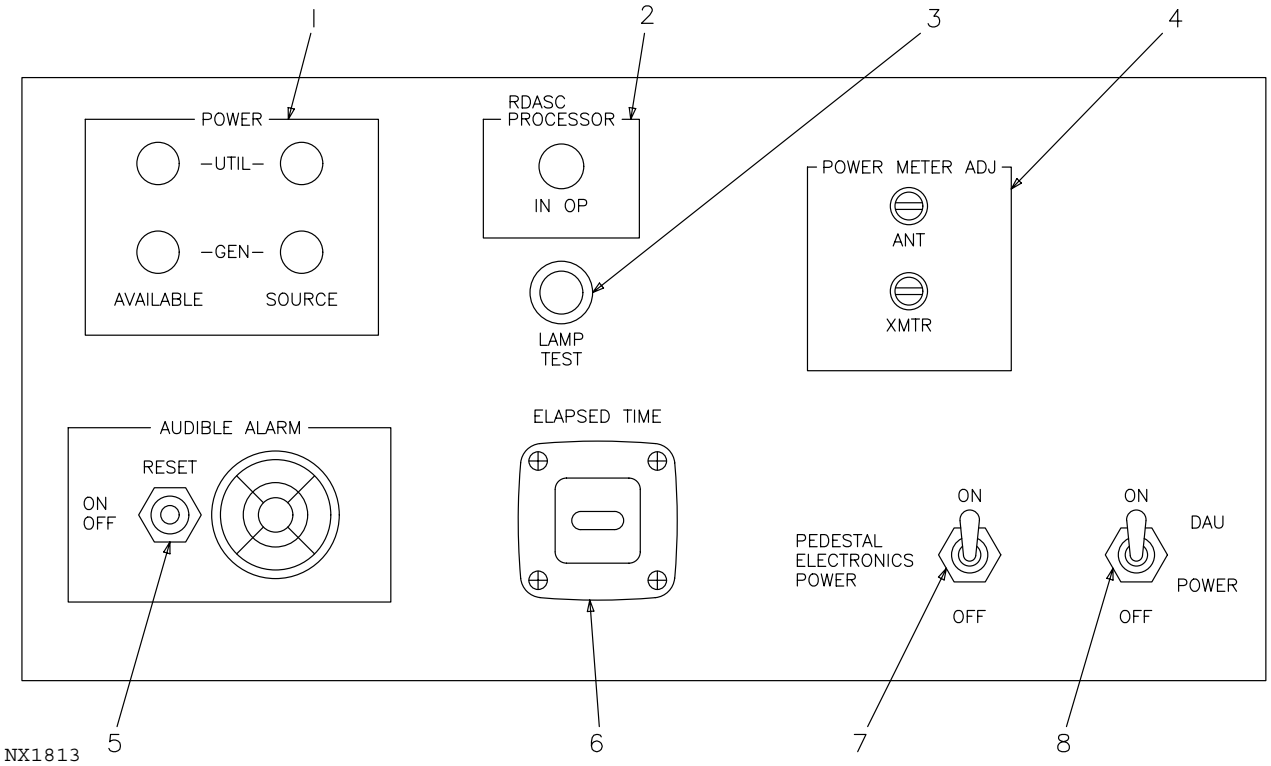


Figure 4-4. RDA Maintenance Panel UD5/105A2, Controls and Indicators

Table 4-3. RDA Maintenance Panel UD5/105A2, Controls and Indicators

| Figure 4-4 Index No. | Control/ Indicator Nomenclature (Type) | Function | Normal Position/ State |
|---|---|---|---|
| 1 | POWER UTIL AVAILABLE (indicator) | Indicates that utility power is available. | Lit |
| | UTIL SOURCE (indicator) | Indicates that equipment is using utility power. | Lit |
| | GEN AVAILABLE (indicator) | Indicates that generator power is available. | Off |
| | GEN SOURCE (indicator) | Indicates that equipment is using generator power. | Off |
| 2 | RDASC PROCESSOR INOP (indicator) | Indicates that a problem exists with RDASC Processor communications to the DAU. | Off |
| 3 | LAMP TEST (pushbutton) | Tests panel lights when pressed. | N/A |

Table 4-3. RDA Maintenance Panel UD5/105A2, Controls and Indicators (continued)

| Figure 4-4 Index No. | Control/ Indicator Nomenclature (Type) | Function | Normal Position/ State |
|---|---|---|---|
| 4 | POWER METER ADJ ANT (potentiometer) | Zero adjustment for antenna power head | N/A |
| | XMTR (potentiometer) | Zero adjustment for transmitter power head | N/A |
| 5 | AUDIBLE ALARM RESET/ON/OFF (switch) | ON - Alarm will sound if RDA edge detected alarms occur<br>OFF - Alarm is disabled<br>RESET - Resets Alarm<br>**NOTE**<br>Refer to Table 6-3, Table 6-4, Table 6-5, and Table 6-6 for a list of Edge Detected (ED) Alarms | On |
| 6 | ELAPSED TIME (meter) | Indicates time power is applied to pedestal and DAU. | N/A |
| 7 (UD5A2 ONLY) | PEDESTAL ELEC-TRONICS POWER ON/OFF (toggle switch) | Applies power to pedestal electronics. | On |
| 8 | DAU POWER ON/ OFF (toggle switch) | Applies power to DAU. | On |

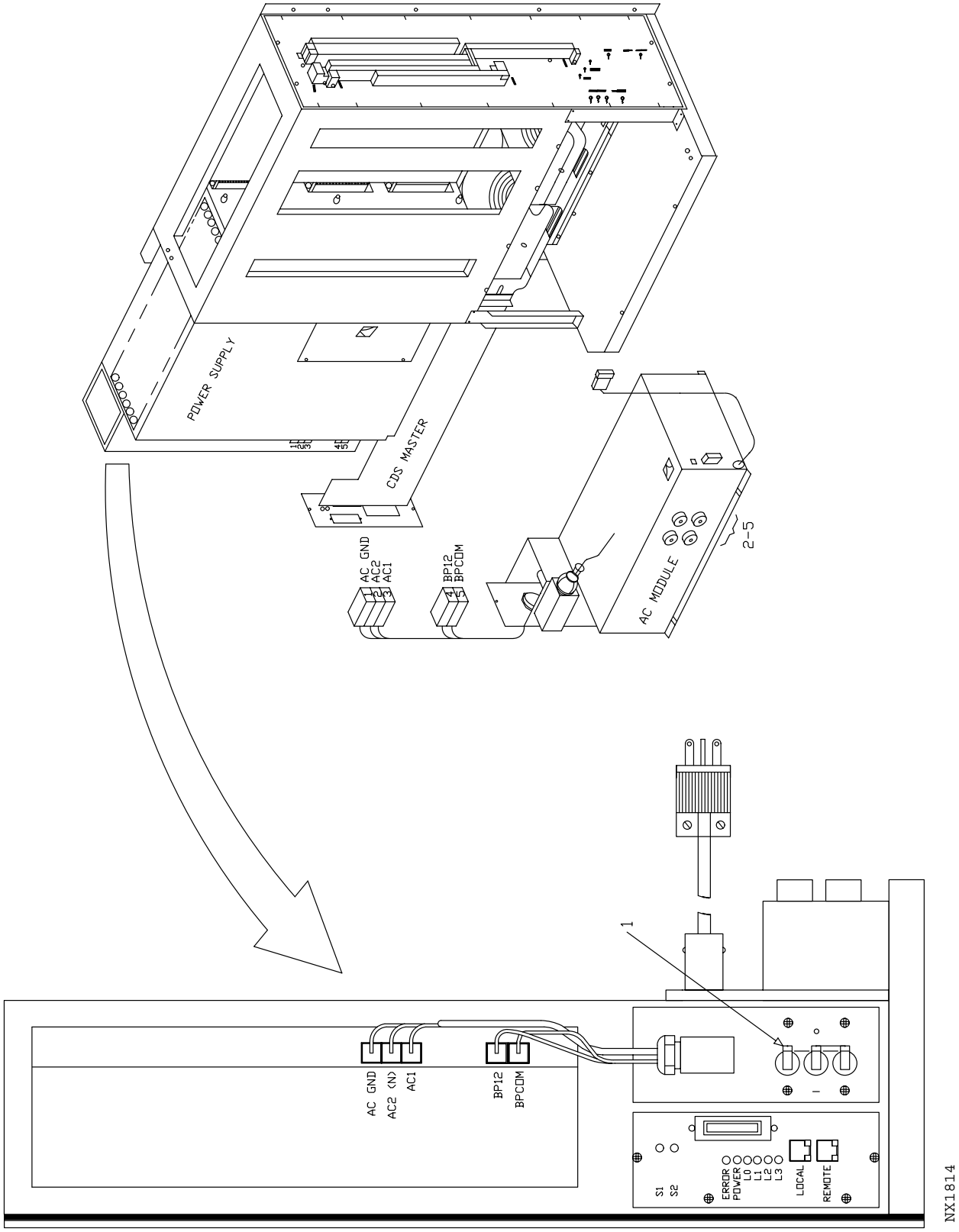


Figure 4-5. Swing-Out Power Subsystem (SOPS) UD5PS5, Controls and Indicators

Table 4-4. Swing-Out Power Subsystem (SOPS) UD5PS5 Controls and Indicators

| Figure 4-5 Index No. | Control/ Indicator Nomenclature (Type) | Function | Normal Position/ State |
|---|---|---|---|
| 1 | CB1 - CB3 (ganged circuit breakers) | Supplies main power (20 amp) and 12 Vdc from battery | On (1) |
| 2 | CB4 (circuit breaker) | 208 Vac Phase A to CDS module | Depressed |
| 3 | CB5 (circuit breaker) | 208 Vac Phase B to CDS module | Depressed |
| 4 | CB6 (circuit breaker) | 208 Vac Phase B to AC fan assy | Depressed |
| 5 | CB7 (circuit breaker) | 208 Vac Phase A to AC fan assy | Depressed |

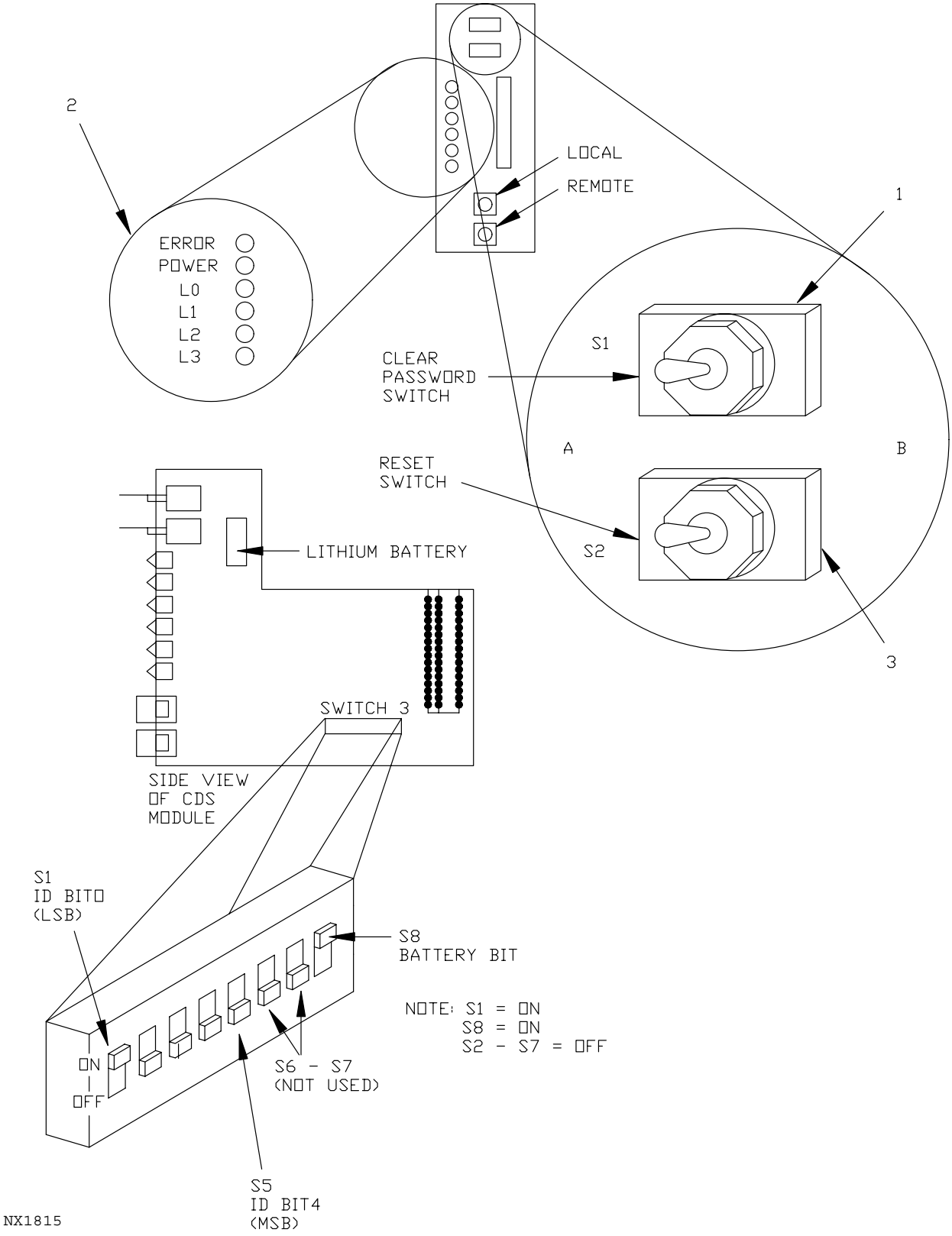


Figure 4-6. CDS Master Module UD5PS5A3, Controls and Indicators

Table 4-5. CDS Master Module UD5PS5A3 Controls and Indicators

| Figure 4-6 Index No. | Control/ Indicator Nomenclature (Type) | Function | Normal Position/ State |
|---|---|---|---|
| 1 | S1 (3-position switch) | S1, the Clear Password Switch allows the operator to void the current password and, via the PASSWORD command, to define a new password. To clear the current password, flip switch S1 to either the left or right position and then back to center. | Center |
| 2 | Indicators (LEDs) | These six indicators are used for trouble-shooting. Refer to Section 6-3 and 6-4 for function. | ERROR OFF<br>POWER LIT<br>LØ OFF<br>L1 LIT<br>L2 OFF<br>L3 OFF |
| 3 | S2 (3-position switch) | S2, the Reset Switch, allows the operator to manually reset the system (including system memory) during system operation. | Center |

Table 4-6. CDS Master Module UD5PS5A3 LED Status

| ERROR | POWER | LØ | L1 | L2 | L3 | CDS Master Module Status |
|---|---|---|---|---|---|---|
| | Lit | | Lit | | | CDS Master Module is operating |
| | Lit | | | Lit | Lit | Insufficient on-board RAM |
| | Lit | Lit | | Lit | Lit | CDS configuration tables are corrupted |
| | Lit | Lit | Lit | Lit | Lit | CDS Master Module failed |
| | Lit | | | | | CDS Master Module has power |
| Lit | | | | | | Cycle Reset switch S2 |
| Lit | | Lit | Lit | Lit | Lit | Battery Bit on S3, #8 is Off or Battery is bad |
| | | Lit | Lit | Lit | Lit | CDS Patch Panel has failed |

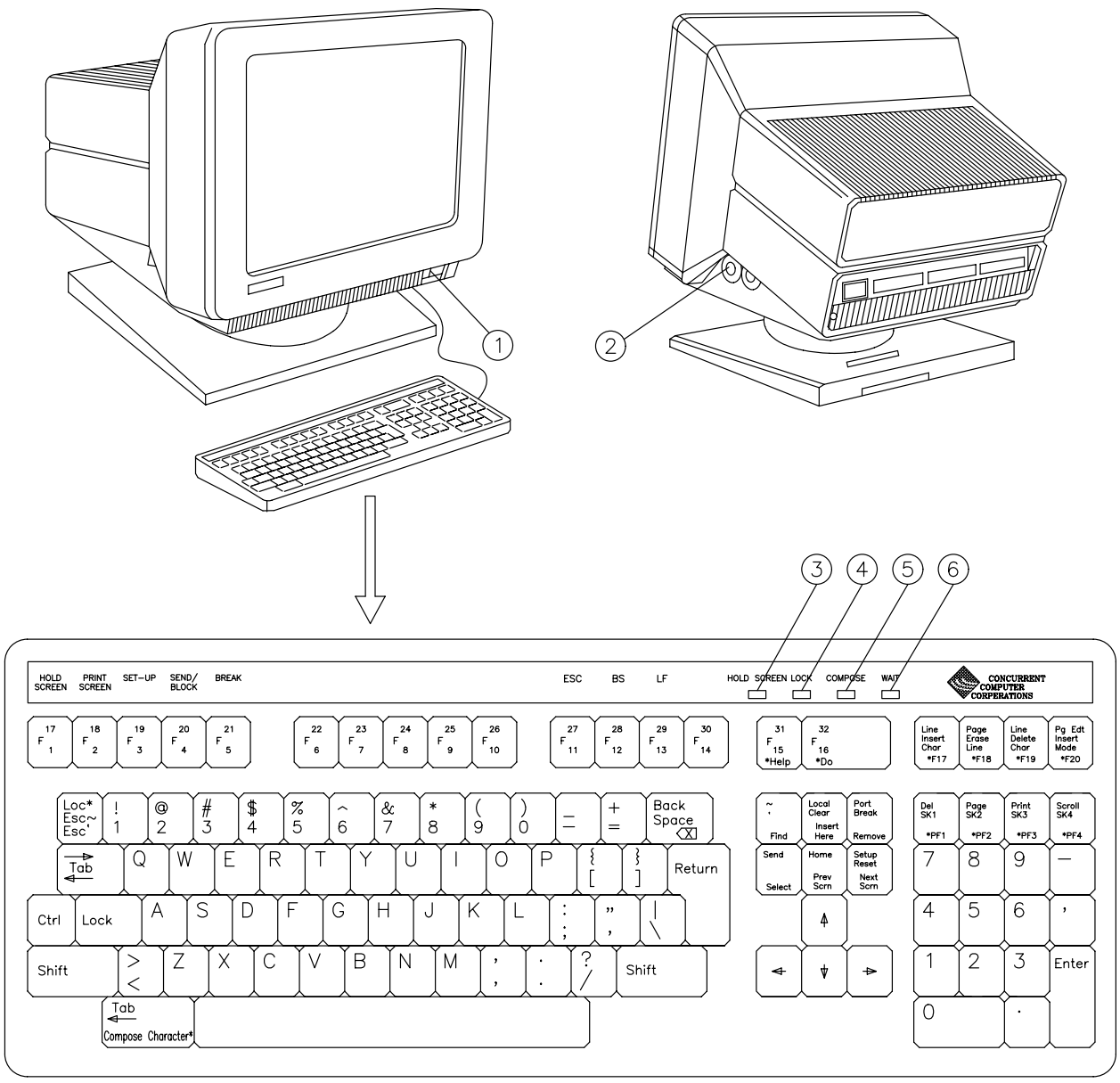


*Label appears on front of key.

NX1816

NOTE: Sites with RDA/RPG Remote Access Terminal (RRRAT) equipment, refer to the RRRAT User's Guide Figures 2-3 and 2-4 for controls and indicators.

Figure 4-7. RDA Maintenance Terminal UD5A4, Controls and Indicators

Table 4-7. RDA Maintenance Terminal UD5A4, Controls and Indicators[1]

| Figure 4-7 Index No. | Control/ Indicator Nomenclature (Type) | Function | Normal Position/ State |
|---|---|---|---|
| 1 | Power ON/OFF switch | Provides power to terminal. | On |
| 2 | Contrast and Brightness Control Dials | Adjusts the contrast and overall screen brightness. | N/A |
| 3 | HOLD SCREEN (indicator) | When lit, indicates that the screen is "frozen". Press **<Shift>** and **<Scroll>** keys simultaneously to unfreeze screen display. | Off |
| 4 | LOCK (indicator) | When lit, indicates that LOCK key has been pressed. Press **<Lock>** key to release CAP LOCK function. | Lit |
| 5 | COMPOSE (indicator) | Not used in WSR-88D system. | N/A |
| 6 | WAIT (indicator) | Not used in WSR-88D system. | N/A |

- - - - -

1. Sites with RDA/RPG Remote Access Terminal (RRRAT) equipment, refer to the RRRAT User's Guide Figures 2-3 and 2-4 for controls and indicators.

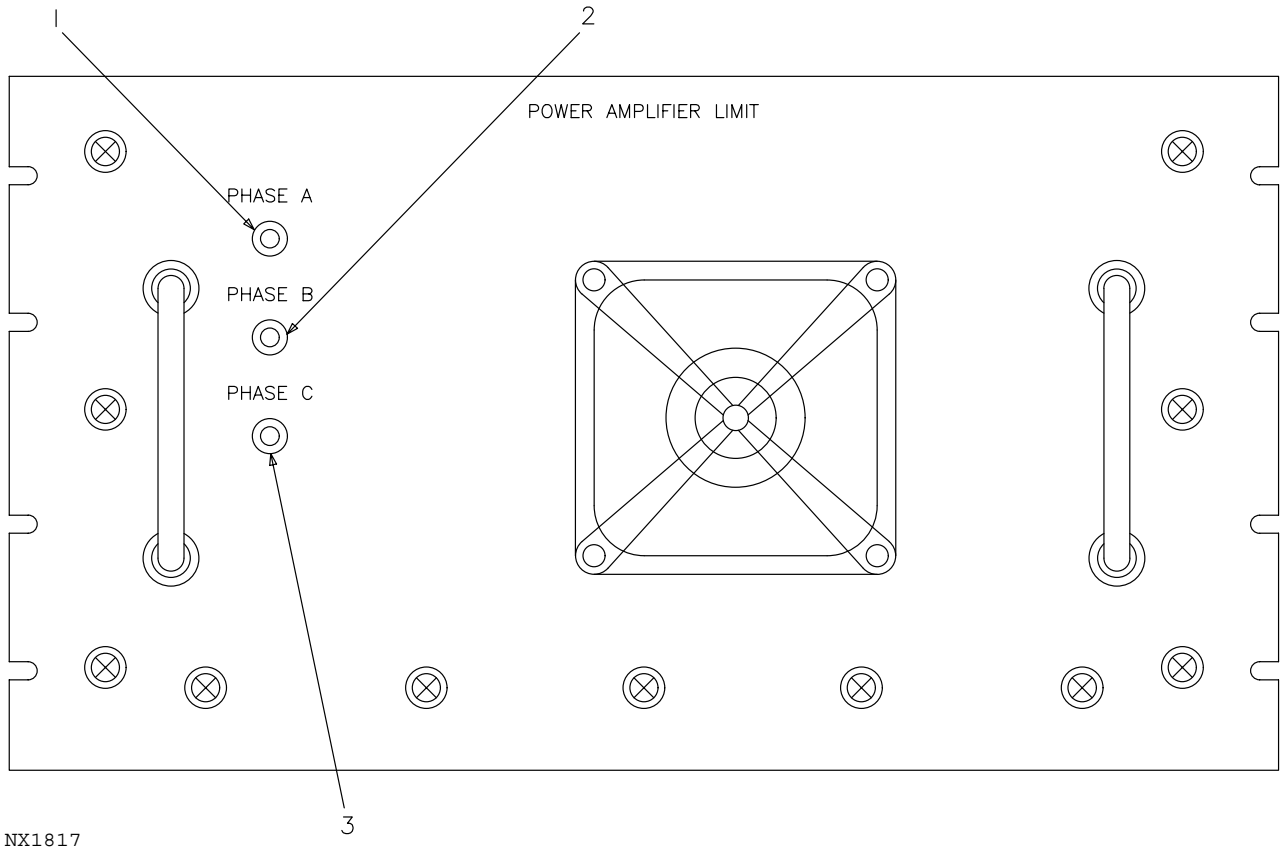


Figure 4-8. Pedestal Power Amplifier Unit UD5A7, Controls and Indicators

Table 4-8. Pedestal Power Amplifier Unit UD5A7, Controls and Indicators

| Figure 4-8 Index No. | Control/ Indicator Nomenclature (Type) | Function | Normal Position/ State |
|---|---|---|---|
| 1 | PHASE A (indicator) | Monitors phase A input power. | Lit |
| 2 | PHASE B (indicator) | Monitors phase B input power. | Lit |
| 3 | PHASE C (indicator) | Monitors phase C input power. | Lit |

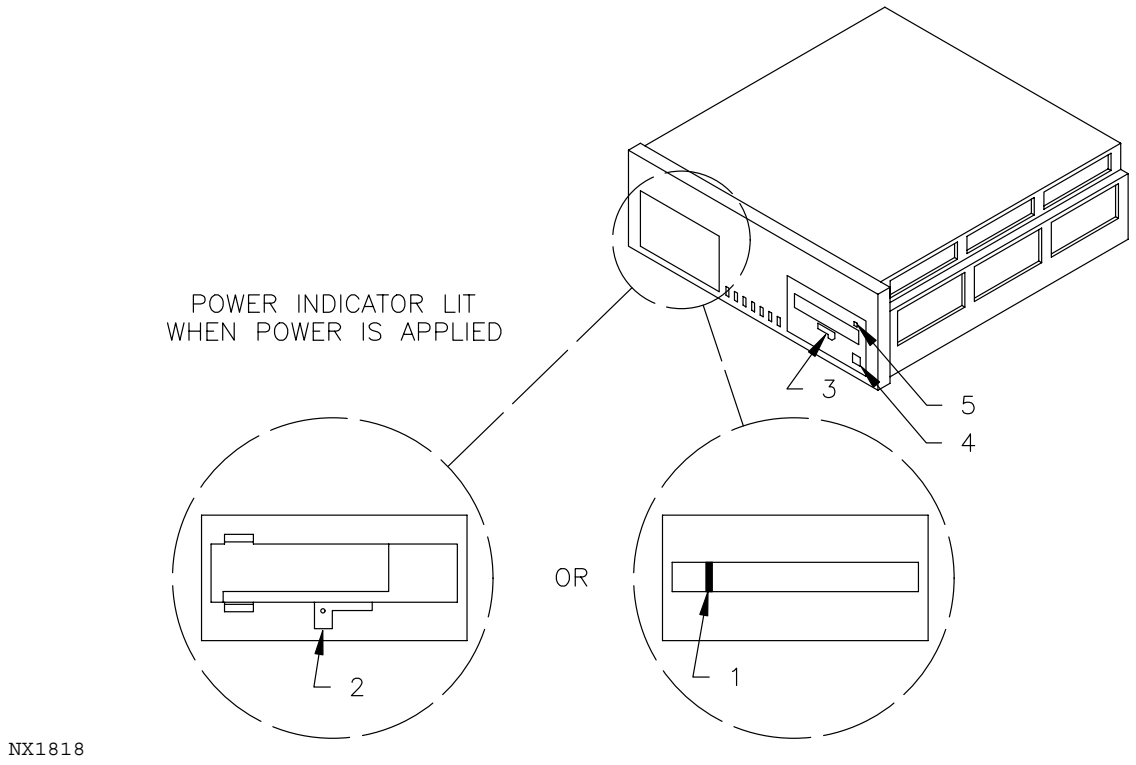


Figure 4-9. SCSI Assembly UD5A5, Controls and Indicators

Table 4-9. SCSI Assembly UD5A5, Controls and Indicators

| Figure 4-9 Index No. | Control/ Indicator Nomenclature (Type) | Function | Normal Position/ State |
|---|---|---|---|
| 1 | Tape Drive Slide Switch | Slide to right to engage head. Slide to left to eject tape. | N/A |
| 2 | Tape Drive Lever | Vertical position secures tape in tape drive. Horizontal position allows insertion or removal of tape. | N/A |
| 3 | Optical Disk Lever | Vertical position secures disk cassette in disk drive. Horizontal position allows insertion or removal of disk cassette. | N/A |
| 4 | Optical Disk Drive (pushbutton power switch and indicator) | Depressed applies spin-up power for disk. Lit indicates disk is spun up. Off indicates disk is not in motion. Flashing indicates disk is either spinning up or spinning down. | N/A |
| 5 | Power (indicator) | Indicates that power subsystem is providing 5 Vdc. | On |

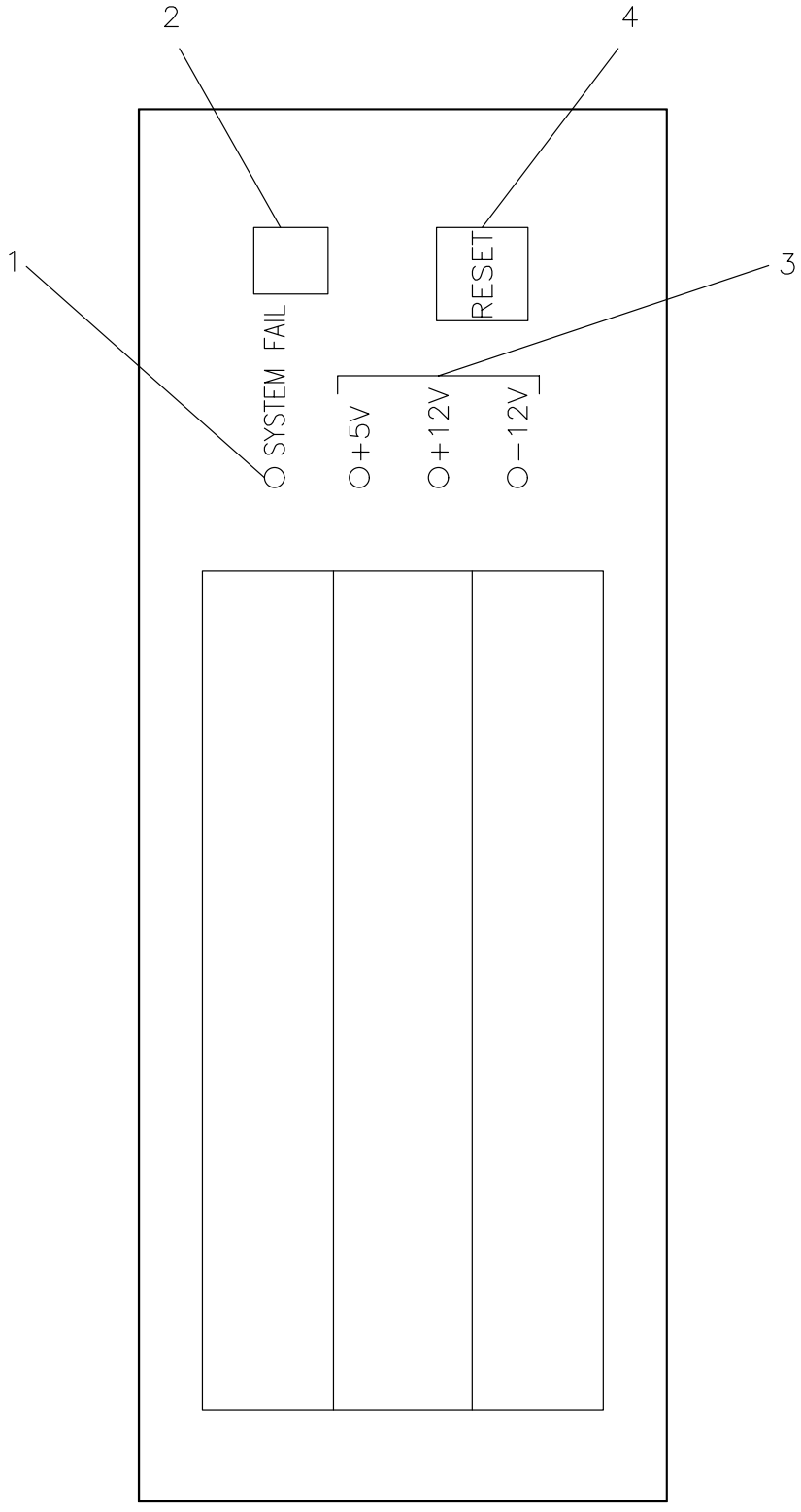


Figure 4-10. VME Assembly UD5A1, Controls and Indicators

Table 4-10. VME Assembly UD5A1 Controls and Indicators

| Figure 4-10 Index No. | Control/ Indicator Nomenclature (Type) | Function | Normal Position/ State |
|---|---|---|---|
| 1 | System Fail (indicator) Red LED | When red LED is illuminated, the system fail signal is activated | Off |
| 2 | ON/OFF switch | Supplies power to VME Chassis when in 1 (ON) position.<br>No power when in Ø (OFF) position | On |
| 3 | +5V<br>+12V<br>-12V<br>(indicators)<br>green LEDs | Indicates voltage is present. | On<br>On<br>On |
| 4 | RESET (button) | Resets VME Chassis causes the boards in chassis to reinitiate self-test (depress button and release to reset) | N/A |

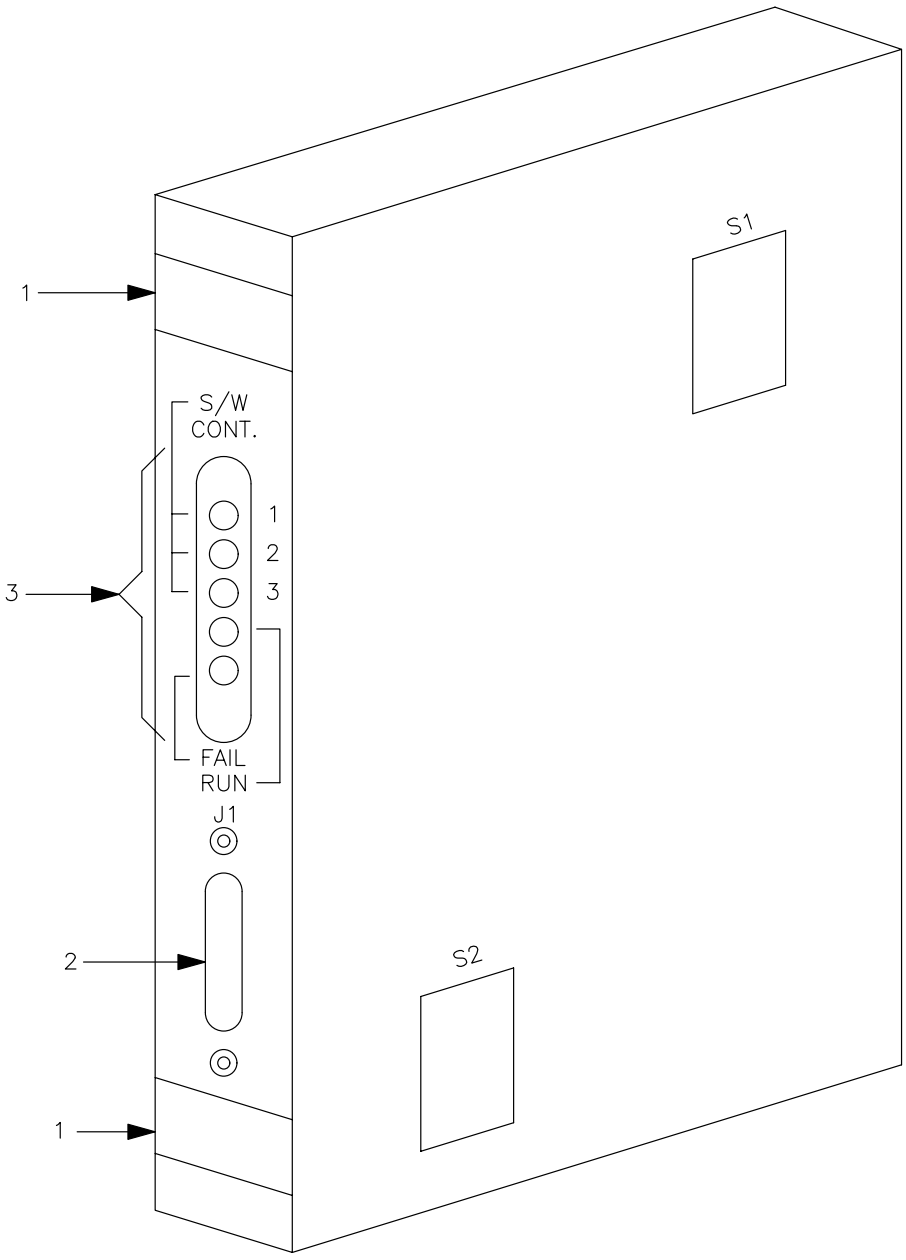


NX1821

Figure 4-11. VME Wideband Board UD5A1A2/A3, Controls and Indicators

Table 4-11. VME Wideband Board UD5A1A2/A3, Controls and Indicators

| Figure 4-11 Index No. | Control/ Indicator Nomenclature (Type) | Function | Normal Position/ State |
|---|---|---|---|
| 1 | Ejector Handles (ejectors) | Aids in inserting and removing board from slot. Lift upward to eject. Press down when inserting | Down |
| 2 | J1 (I/O Connector) | Optional connector to connect cable to DCE. | N/A |
| 3 | Status LEDs | | |
| | 1, 2, 3 (indicator yellow LED) | Software Controlled | Off |
| | RUN (indicator green LED) | Indicates power supplied to board | On |
| | FAIL (indicator red LED) | Indicates board failure | Off (illuminates temporarily during reset) |

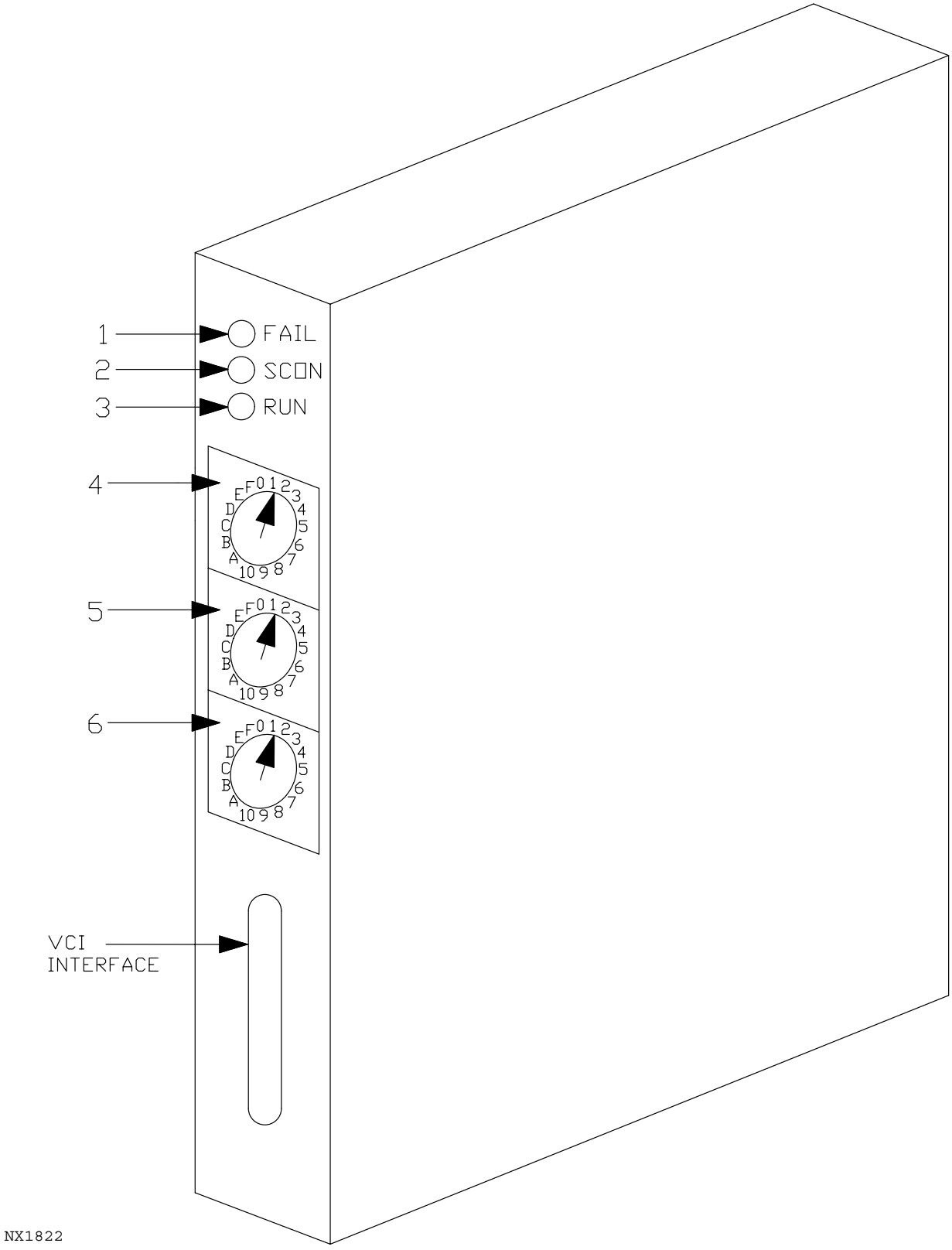


Figure 4-12. VMEbus to Concurrent I/O Bus Interface Board (VCI-V) UD5A1A1, Controls and Indicators

Table 4-12. VMEbus to Concurrent I/O Bus Interface Board (VCI-V) UD5A1A1, Controls and Indicators

| Figure 4-12 Index No. | Control/ Indicator Nomenclature (Type) | Function | Normal Position/ State |
|---|---|---|---|
| 1 | SYSFAIL Indicator (red LED) | When LED is lit System FAIL signal is activated | Off |
| 2 | System Controller (SCON) Indicator (yellow LED) | LED is lit while the VCI-V is the system controller (SCON) | On |
| 3 | RUN Indicator (green LED) | LED is lit when the RESET is not activated on the VMEbus backplane | On |
| 4 | Board ID2 switch (SW1) | Top nibble (4 bits) of the VMEbus A32 address (A28 - A21) | |
| 5 | Board ID1 switch (SW2) | Next nibble (4 bits) of the VMEbus A32 address (A24 - A27) | |
| 6 | MEM size switch (SW3) | Memory size of the CARD, where<br>Ø = 1 Mbyte of VMEbus memory used<br>1 = 2 Mbytes of VMEbus memory used<br>.<br>.<br>.<br>15 = 16 Mbytes of VMEbus memory used | |

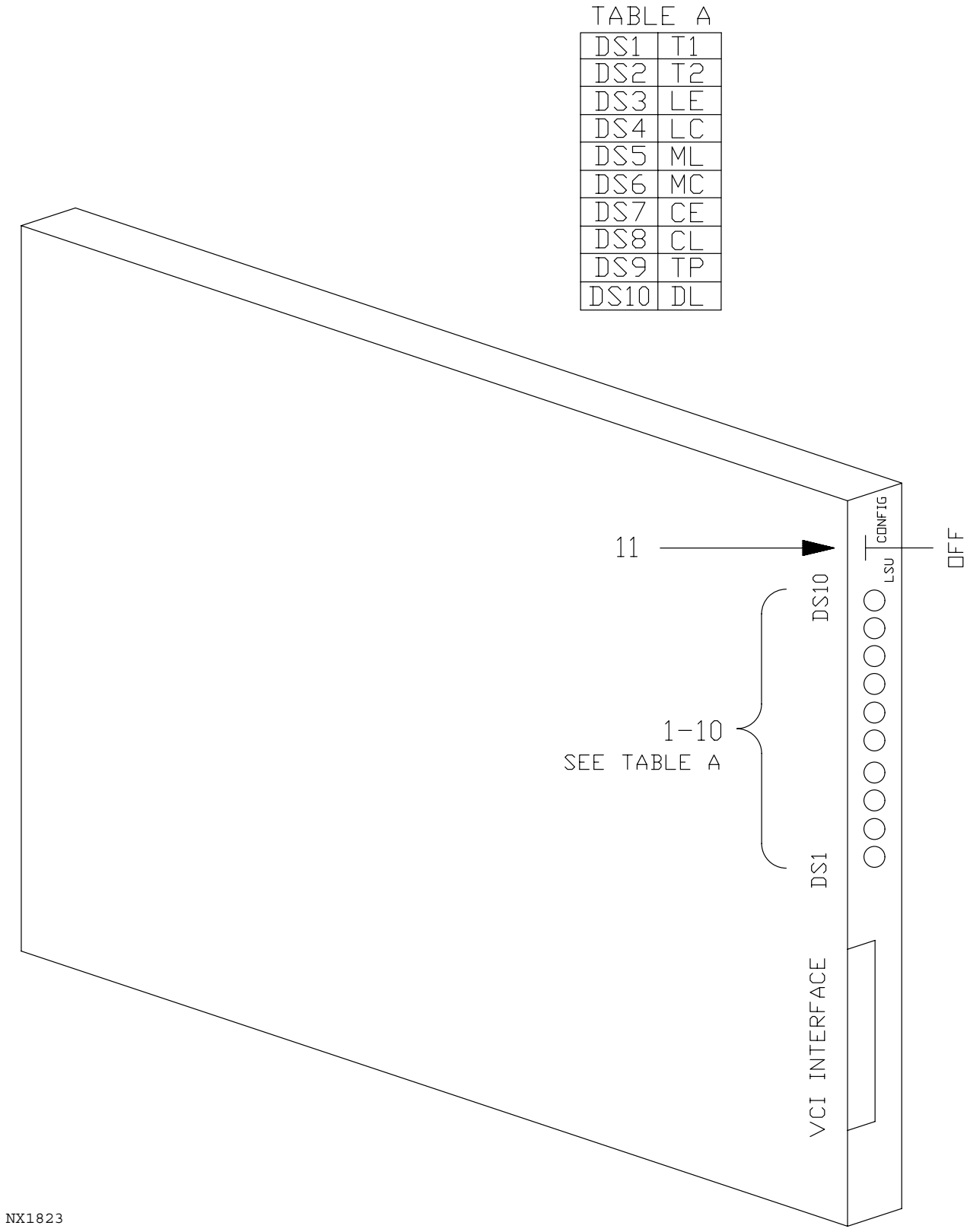


Figure 4-13. VMEbus to Concurrent I/O Bus Interface Board (VCI-C) UD5A12A18, Controls and Indicators

Table 4-13. VMEbus to Concurrent I/O Bus Interface Board (VCI-C) UD5A12A18, Controls and Indicators

| Figure 4-13 Index No. | Control/ Indicator Nomenclature (Type) | Function | Normal Position/ State |
|---|---|---|---|
| 1 | T1 | Power On Test Status LED | On* |
| 2 | T2 | Power On Test Status LED | On* |
| 3 | LE | Local CPU to EDMA Bus Access LED | |
| 4 | LC | Local CPU to cable SWS Access LED | |
| 5 | ML | Muxbus to Local CPU Bus Access LED | |
| 6 | MC | Muxbus to Cable Bus Access LED | |
| 7 | LE | Cable bus to EDMA Bus Access LED | |
| 8 | CL | Cable bus to Local CPU Bus Access LED | |
| 9 | TP | Test Point TP1 | Off** |
| 10 | DL | Deadlock of Cable Bus/VIC | |
| 11 | SW3 | LSU/OFF/CONFIG Switch | Off |

- - - - -

* T1 OFF during the power up process
T2 blinks at about 1.5 MHz until the VMEbus is up
Both LEDs will be on after power-up test is complete
T2 will blink if VMEbus is in an ACFAIL condition.

** TP LED normally OFF
ON = TP1 is at Ø Vdc
OFF = TP1 is at 5 Vdc

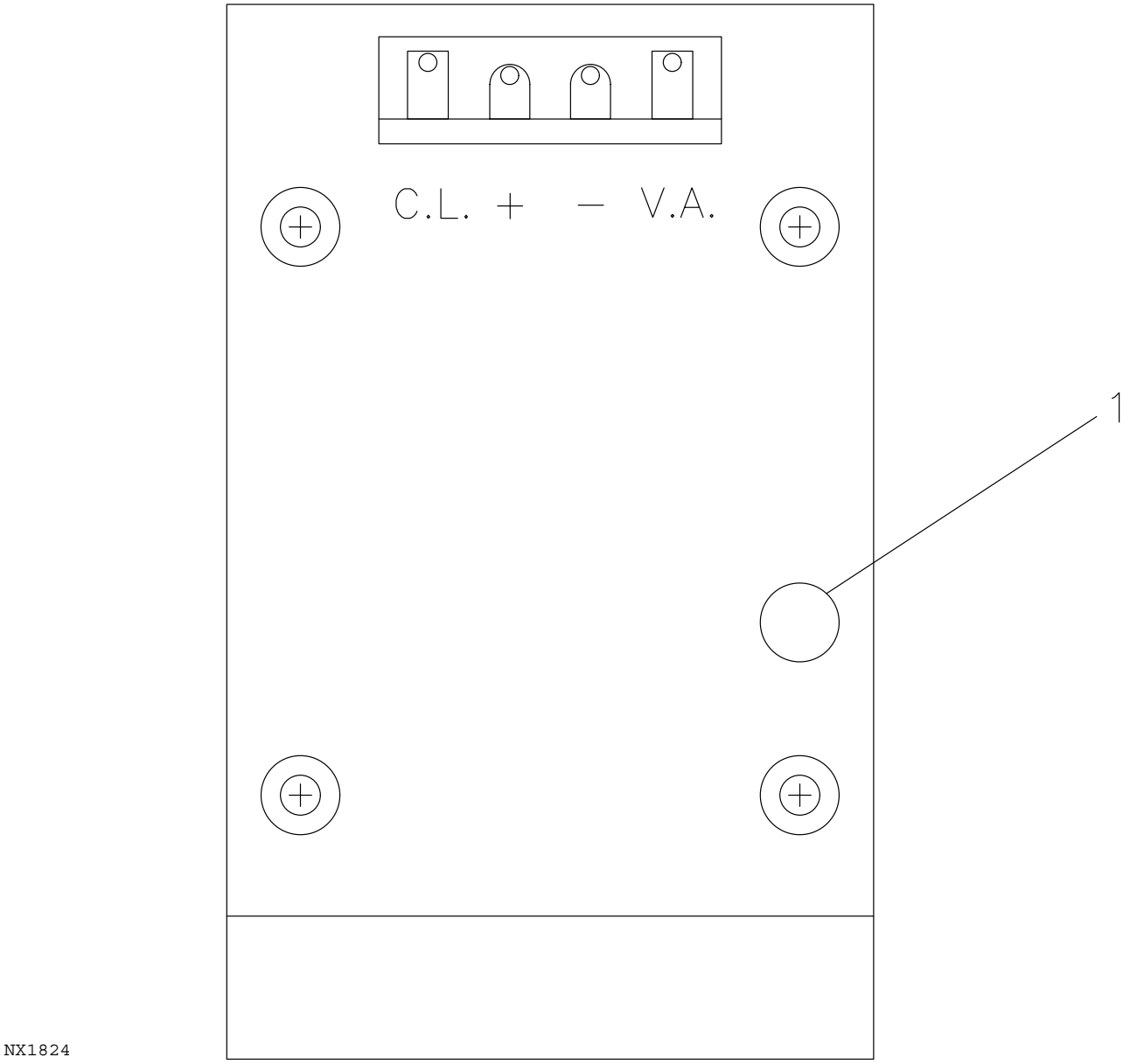


Figure 4-14. RDA Power Supplies PS2 and PS3, Controls and Indicators

Table 4-14. RDA Power Supplies PS2 and PS3, Controls and Indicators

| Figure 4-14 Index No. | Control/ Indicator Nomenclature (Type) | Function | Normal Position/ State |
|---|---|---|---|
| 1 | AC Power (LED) | When lit indicates 120 Vac is available to the power supply | Lit |

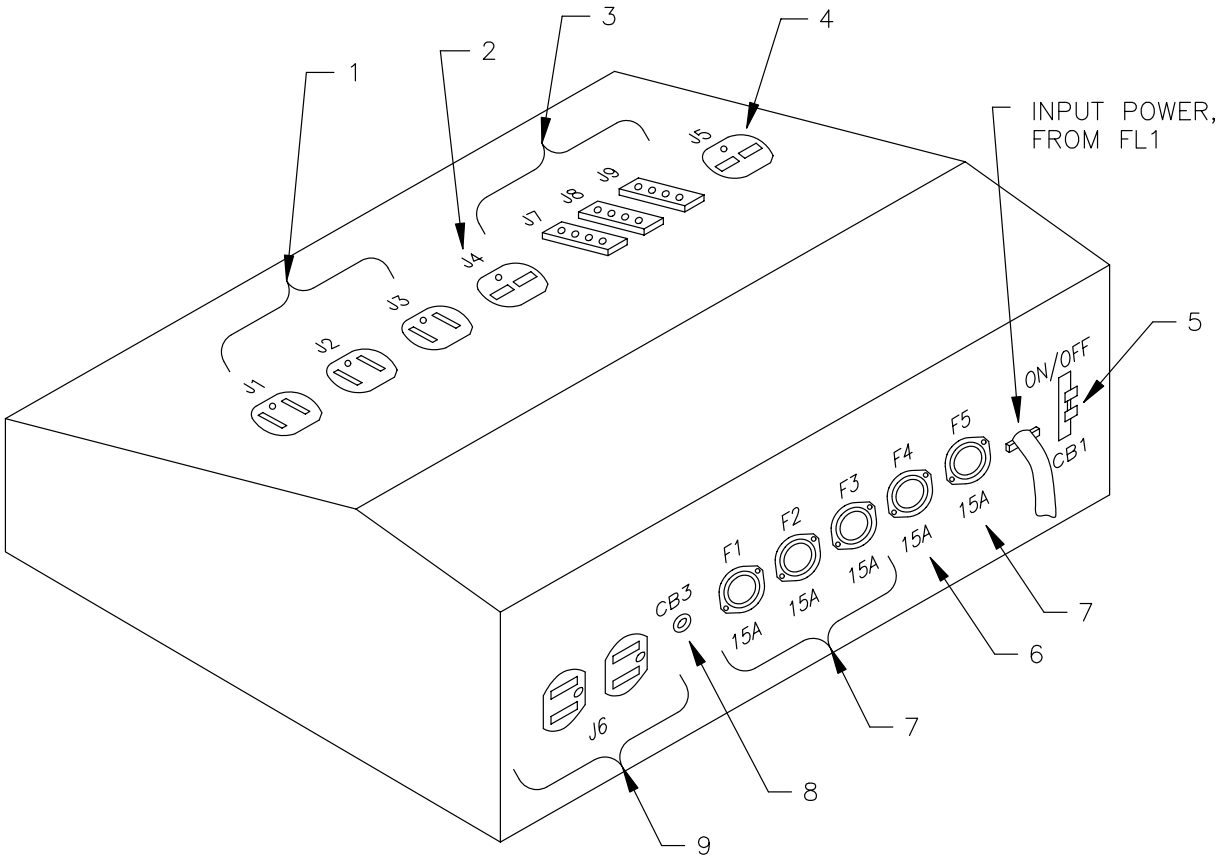


NX1825

Figure 4-15. AC Power Distribution Panel UD5A14, Controls and Indicators

Table 4-15. AC Power Distribution Panel UD5A14, Controls and Indicators

| Figure 4-15 Index No. | Control/ Indicator Nomenclature (Type) | Function | Normal Position/ State |
|---|---|---|---|
| 1 | J1, J2, and J3 (power outlets) | Supply 120 Vac power | N/A |
| 2 | J4 (power outlet) | Supply 208 Vac power | N/A |
| 3 | J7, J8, and J9 (power outlets) | Supply 120 Vac power | N/A |
| 4 | J5 (power outlet) | Supply 208 Vac power | N/A |
| 5 | CB1 (circuit breaker) | Power on/off for power distribution panel | On |
| 6 | F4 | 300V, 15 amp fuse (spare) | N/A |
| 7 | F1, F2, F3, and F5 (fuses) | 300V, 15 amp fuses<br>F1 fuses J1<br>F2 fuses J2<br>F3 fuses J3<br>F4 fuses J4<br>F5 fuses J5 | N/A |
| 8 | CB3 (pushbutton circuit breaker) | Resets J6 | N/A |
| 9 | J6 (power outlets (2)) | Supplies 120 Vac power | N/A |

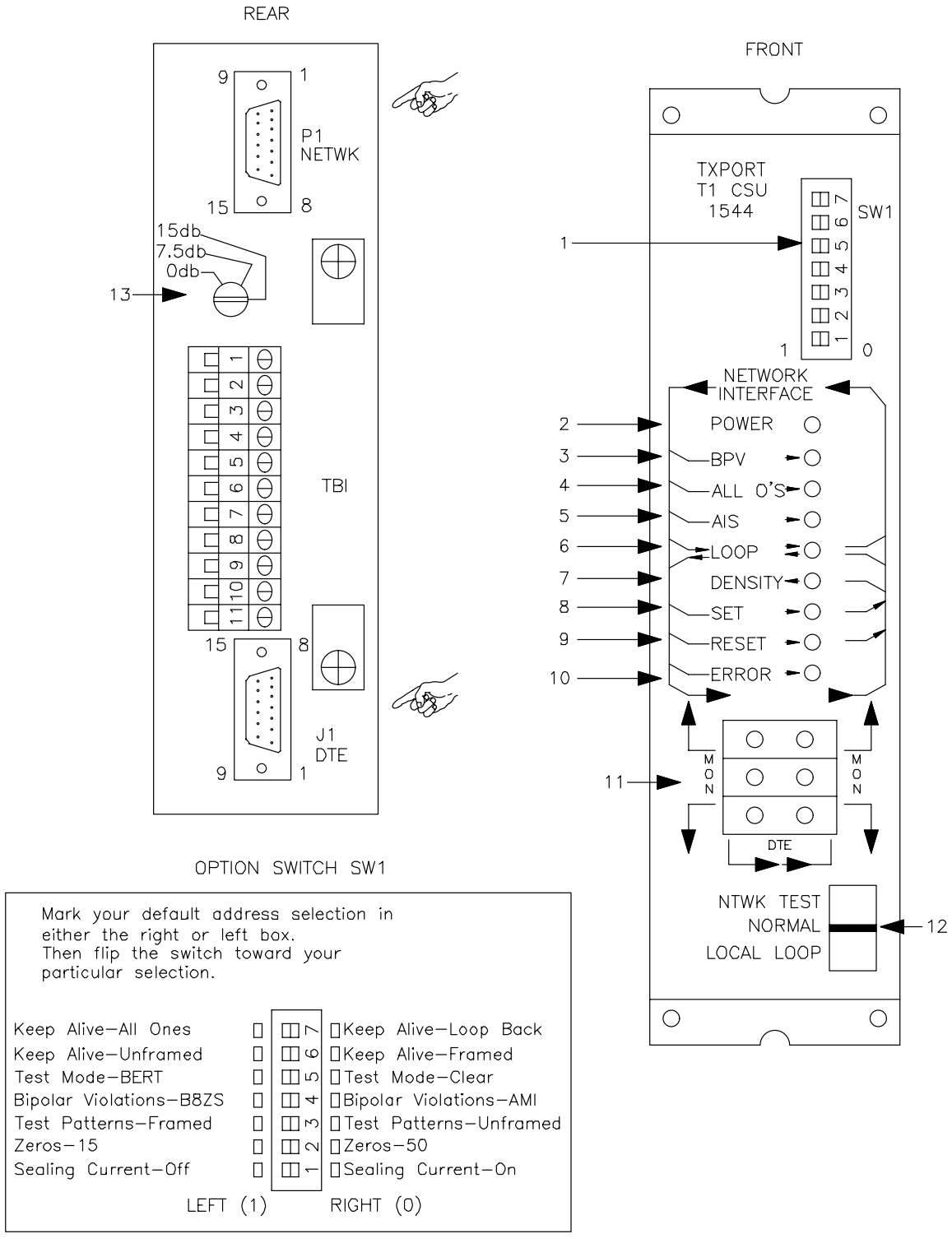


NX1826

Figure 4-16. CSU UD5A18, Controls and Indicators (Sheet 1 of 2)

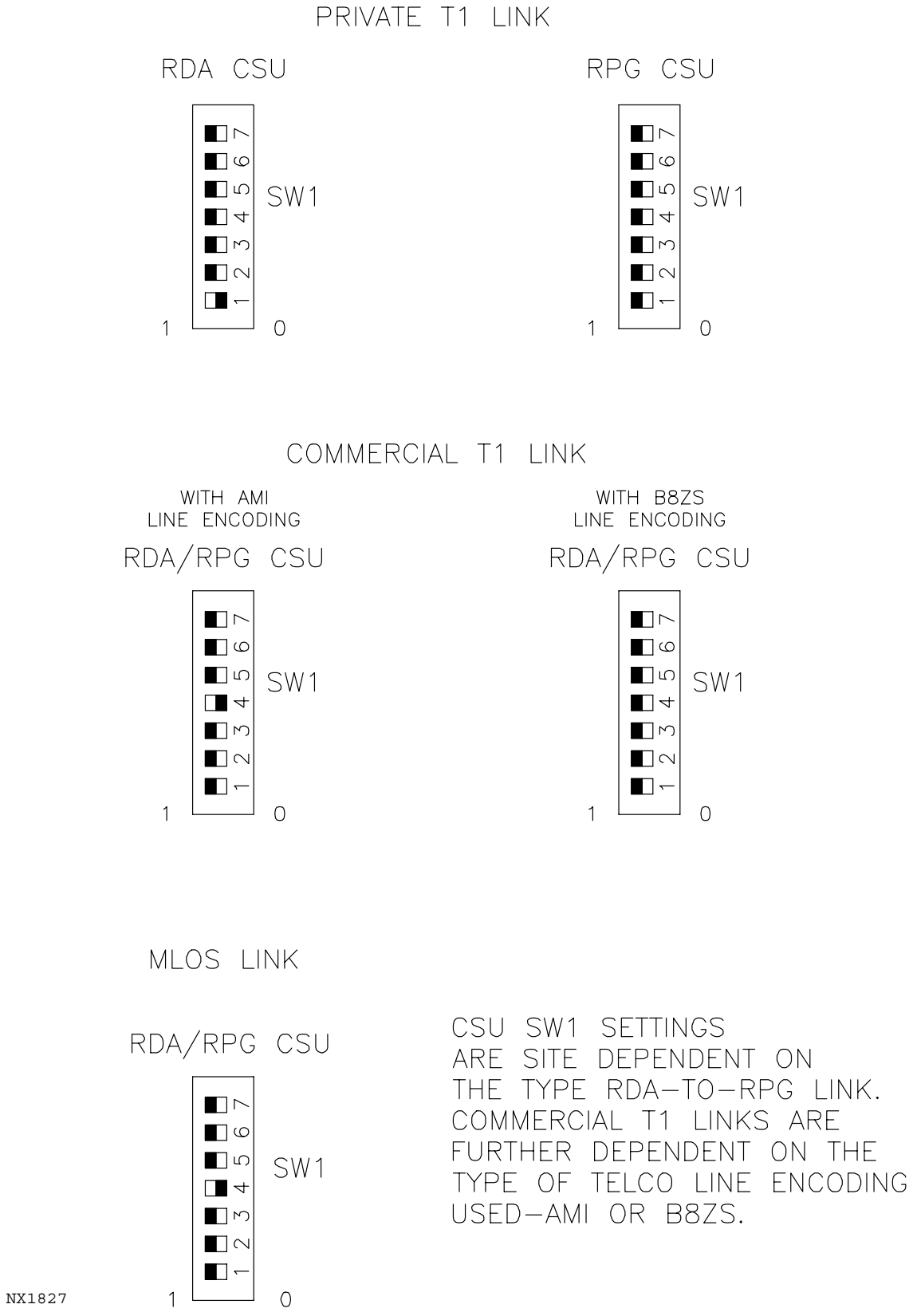


Figure 4-16. CSU UD5A18, Controls and Indicators (Sheet 2 of 2)

Table 4-16. CSU UD5A18, Controls and Indicators

| Figure 4-16 Index No. | Control/ Indicator Nomenclature (Type) | Function | Normal Position/ State |
|---|---|---|---|
| 1 | SW1-1 | Sealing current switch to provide sealing current on (Ø) or off (1) in the locally powered mode | * |
| | SW1-2 | Selection of 15 (1) or 50 (Ø) successive zeros before keep-alive is activated | 1 |
| | SW1-3 | Selection of framed (1) or unframed (Ø) test patterns | 1 |
| | SW1-4 | Selection of B8ZS (1) or AMI (Ø) encoding from the T1 Provider Network Interface | ** |
| | SW1-5 | Selects the option of internally generated BERT test pattern (1) or clear (Ø) for externally injected test signals for network testing | 1 |
| | SW1-6 | Selects framed (Ø) or unframed (1) keep-alive signals | 1 |
| | SW1-7 | Selects the use of loopback (Ø) or all ones (1) as keep-alive signal | 1 |
| 2 | POWER | Indicates that power is applied to the CSU | On |
| 3 | BPV | Illuminates for each occurrence of bipolar violation | Off |
| 4 | ALL Øs | Illuminates if no signals are detected from the network | Off |
| 5 | AIS | Illuminates if an unframed all ones signal is detected from the network or DTE | Off |
| 6 | LOOP | Illuminates to indicate that the unit is in the line loop condition | Off |

- - - - -

* For private T1 configurations, the RDA CSU normal state for SW1-1 is 0. For private T1 configurations, the RPG CSU normal state for SW1-1 is 1. For commercial T1 and MLOS configurations, both RDA and RPG CSUs' normal state for SW1-1 is 1.

** For private T1 configurations, the RDA CSU normal state for SW1-4 is 1. For MLOS configurations, the RDA and RPG CSUs' normal state for SW1-4 is 0. For commercial T1 sites, where the telco provider T1 link uses B8ZS line encoding, the normal state for SW1-4 is 1. For commercial T1 sites, where the telco provider T1 link uses AMI line encoding, the normal state for SW1-4 is 0. These settings do not apply to RDA/RPG co-located or hardwired sites.

Table 4-16. CSU UD5A18, Controls and Indicators (continued)

| Figure 4-16 Index No. | Control/ Indicator Nomenclature (Type) | Function | Normal Position/ State |
|---|---|---|---|
| 7 | DENSITY | Illuminates if the ones density of the received data from the DTE is less than 12.5% | Off |
| 8 | SET | Flashes when the BERT test code is transmitted. Lights constantly when the in-band set code is received | Off |
| 9 | RESET | Flashes when the reset code is transmitted. Lights constantly if the in-band reset code is received | Off |
| 10 | ERROR | Flashes if an error is received during network test | Off |
| 11 | Test Jacks | These bantam jacks provide access to the T1 line on the DTE side. The jacks allow transmit and receive toward the network, toward the DTE, or monitoring of traffic between the DTE and the network. | |
| 12 | TEST | This is a 3-position rocker switch used for performing a network test or a local loopback | Normal |
| 13 | LBO | This switch has three settings, Ø, 7.5, and 15 dB, which allow efficient signal transmission based on the distance to the Telco T1 link. For those links equipped with Telco smart jacks, the setting is Ø. The default setting is 7.5, unless otherwise specified by site documentation. | Site Dependent |

- - - - -

* For private T1 configurations, the RDA CSU normal state for SW1-1 is 0. For private T1 configurations, the RPG CSU normal state for SW1-1 is 1. For commercial T1 and MLOS configurations, both RDA and RPG CSUs' normal state for SW1-1 is 1.

** For private T1 configurations, the RDA CSU normal state for SW1-4 is 1. For MLOS configurations, the RDA and RPG CSUs' normal state for SW1-4 is 0. For commercial T1 sites, where the telco provider T1 link uses B8ZS line encoding, the normal state for SW1-4 is 1. For commercial T1 sites, where the telco provider T1 link uses AMI line encoding, the normal state for SW1-4 is 0. These settings do not apply to RDA/RPG co-located or hardwired sites.

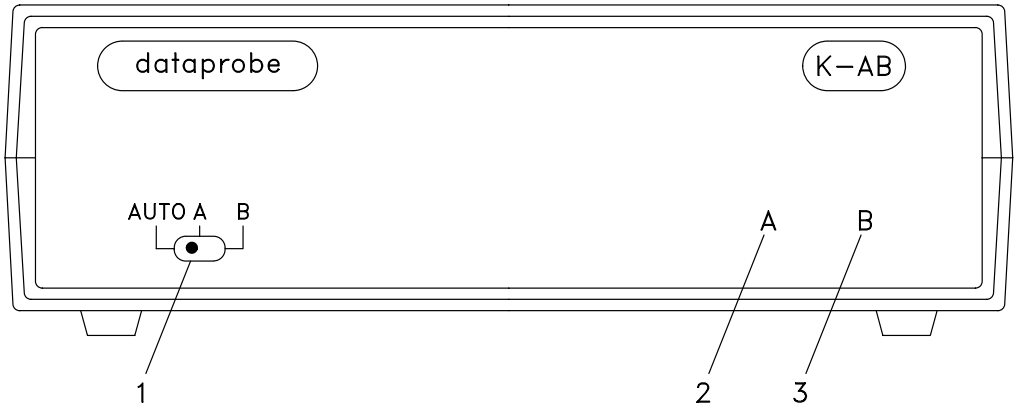


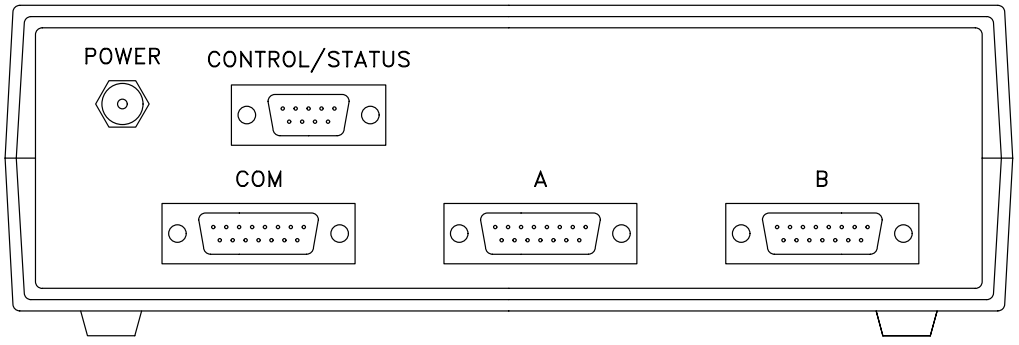


NX1828

Figure 4-17. Automatic A/B Wideband Communication Switch UD5A19, Controls and Indicators

Table 4-17. Automatic A/B Wideband Communication Switch UD5A19, Controls and Indicators

| Figure 4-17 Index No. | Control/ Indicator Nomenclature (Type) | Function | Normal Position/ State |
|---|---|---|---|
| 1 | AUTO/A/B (Switch) | Selects which RS232 interface input will be output on the RS232 “COM” connector.<br>When set to “A” the input to the “A” connector is output on the “COM” connector.<br>When set to “B” the input to the “B” connector is output on the “COM” connector.<br>When set to “AUTO” the output on the “COM” connector comes from input connector “B” when the signal on pin 1 of the CONTROL/STATUS connector is high and comes from input connector “A” when the signal is low (grounded). | It should always be set to AUTO. |
| 2 | LED (labeled A, color red) | Illuminates when the source of output “COM” connectors comes from the input connector “A”. | N/A |
| 3 | LED (labeled B, color red) | Illuminates when the source of the output “COM” connector comes from input connector “B”. | N/A |

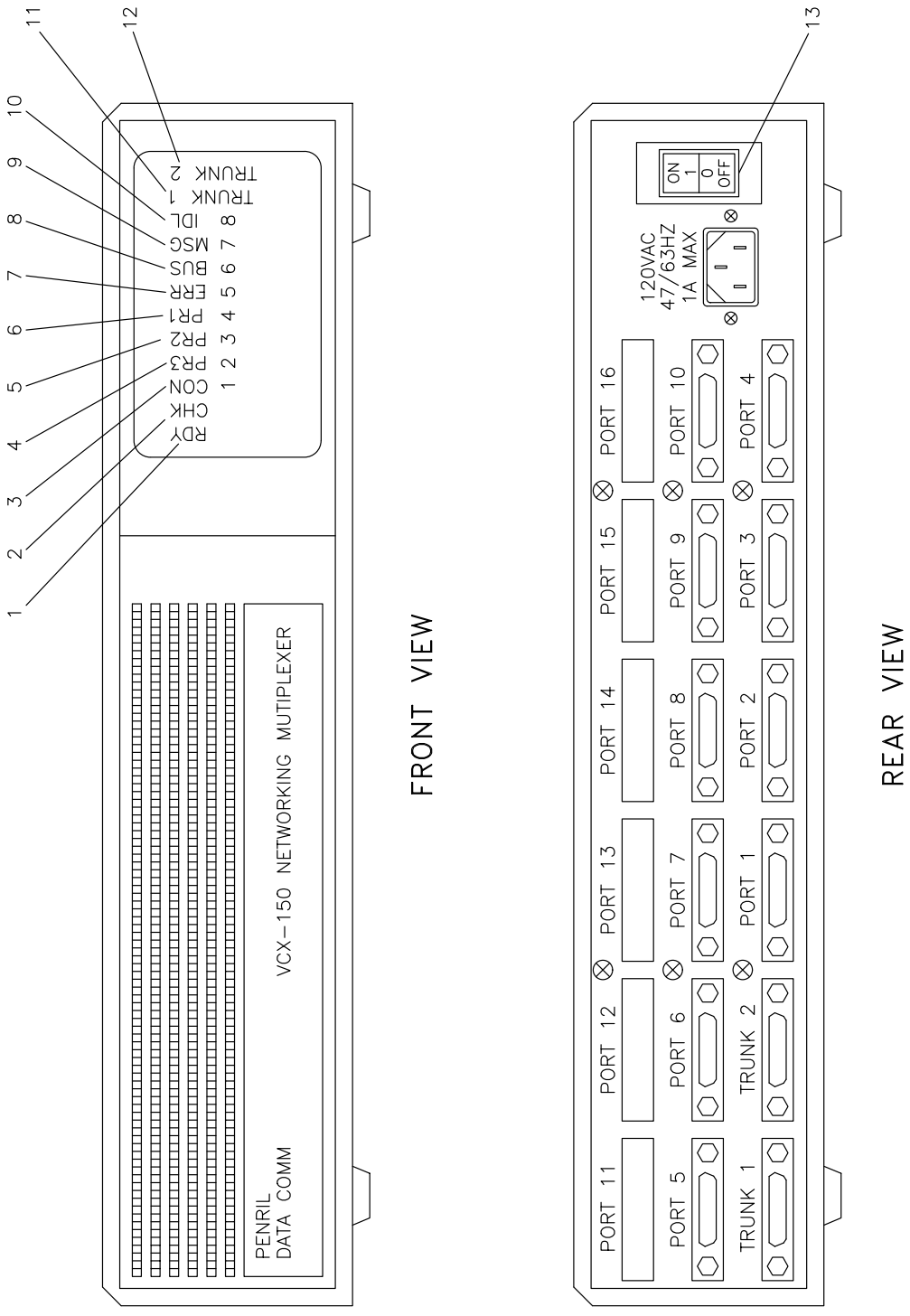


NX1829

Figure 4-18. STATMUX UD105A20, Controls and Indicators

Table 4-18. STATMUX UD105A20, Controls and Indicators

| Figure 4-18 Index No. | Control/ Indicator Nomenclature (Type) | Function | Normal Position/ State |
|---|---|---|---|
| 1 | RDY (Ready) LED (color green) | Power on indicator | On |
| 2 | CHK (Check) LED (color green) | Indicates a statistical multiplexer hardware failure | Off |
| 3 | LED 1-CON (Connection) LED (color green) | Indicates a connection is active in the statistical multiplexer | On |
| 4 | LED 2-PR3 (Priority 3) LED (color green) | Indicates a priority level 3 task is active in the statistical multiplexer | Flickering |
| 5 | LED 3-PR2 (Priority 2) LED (color green) | Indicates a priority level 2 task is active in the statistical multiplexer | Flickering |
| 6 | LED 4-PR1 (Priority 1) LED (color green) | Indicates a priority level 1 task is active in the statistical multiplexer | Off |
| 7 | LED 5-ERR (Error) LED (color green) | Indicates a system bus error | Off |
| 8 | LED 6-BUS LED (color green) | Indicates system bus input/output | Off |
| 9 | LED 7-MSG (Message) LED (color green) | Indicates message activity | Flickering |
| 10 | LED 8-IDL (Idle) LED (color green) | Indicates a task is idle | On |
| 11 | TRUNK 1 LED (color red) | Indicates trunk number 1 is not operational | Off |
| 12 | TRUNK 2 LED (color red) | Indicates trunk 2 is not operational | Off |
| 13 | Power ON/OFF Switch | Applies power to the Statistical Multiplexer when in the ON position | On |

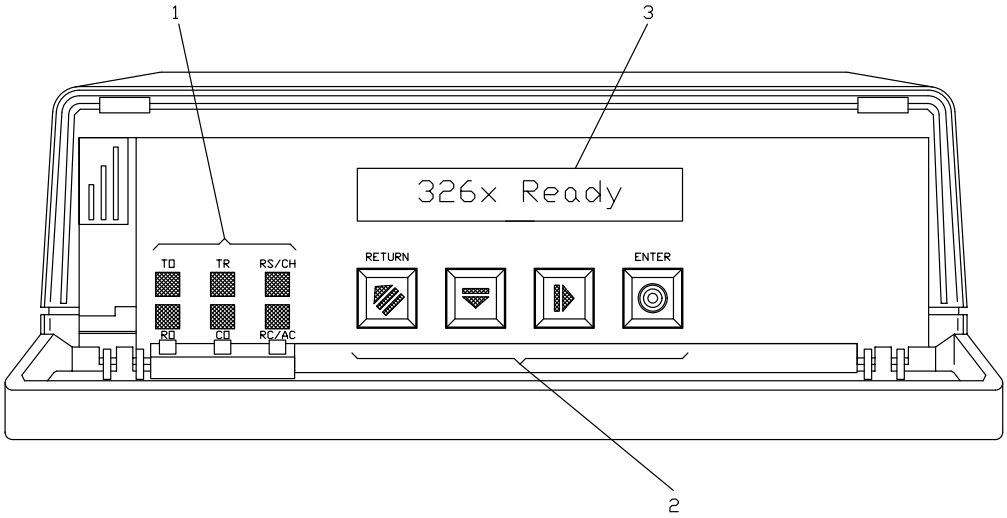


FRONT VIEW

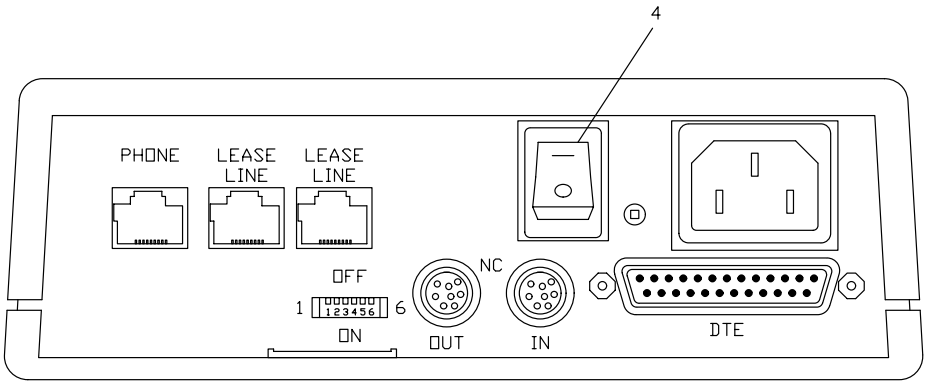


REAR VIEW

NX1830

Figure 4-19. Dial Port Modem UD105A21 (Standalone), Controls and Indicators

Table 4-19. Dial Port Modem UD105A21 (Standalone), Controls and Indicators

| Figure 4-19 Index No. | Control/ Indicator Nomenclature (Type) | Function | Normal Position/ State |
|---|---|---|---|
| 1 | TD (indicator) | Flashes when the modem accepts data to be transmitted from the local terminal. | N/A |
| | RD (indicator) | Flashes when the modem passes received data to the local terminal. | N/A |
| | RI/OH (indicator) | Illuminates when an incoming call is ringing. Also illuminates when the modem is off-hook and connected to the dial line. | N/A |
| | CD (indicator) | Illuminates when the local modem is receiving a carrier signal (as defined by the modulation mode currently being used) from the remote modem or when the front panel DCD option is set to High. | N/A |
| | TR (indicator) | Illuminates when a DTR signal from an attached terminal is detected. | N/A |
| | RC/NC (indicator) | Flashes to indicate that the modem is under remote configuration (via front panel or AT ACU). | N/A |
| 2 | (RETURN) | Steps back up through the menu tree from options and menus to the Home display. | N/A |
| | (ACROSS) | Steps across the options in each branch of the menu tree. | N/A |
| | (DOWN) | Steps down through the menu tree to menus, options, and settings. | N/A |
| | (ENTER) | Selects a setting and/or initiates an action chosen. This key also serves as a Talk/Data “softkey” when at the Home display. | N/A |
| 3 | LED (display) | Indicates modem is Ready | N/A |
| 4 | Power (switch) | Applies power to the modem when in “1” position. | “1” (On) |

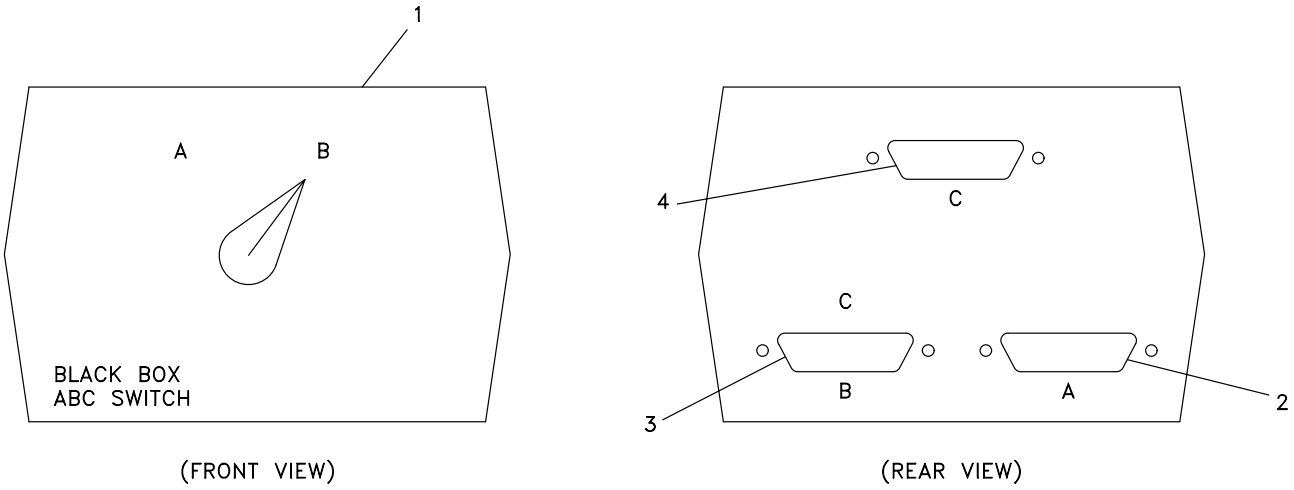


NX1831

Figure 4-20. A/B Switch UD5A17, Controls and Indicators

Table 4-20 deleted. Refer to Table 4-21 for A/B Switch UD5A17/UD105A17 Controls and Indicators.

Table 4-21. A/B Switch UD5A17/UD105A17, Controls and Indicators

| Figure 4-20 Index No. | Control/ Indicator Nomenclature (Type) | Function | Normal Position/ State |
|---|---|---|---|
| 1 | A/B | "B" position switches the RDA Data Processor Maintenance port to the RDA Maintenance Terminal. In Federal Aviation Administration (FAA) redundant systems, "B" position of switch UD105A17 switches RDA Data Processor maintenance port of RDA to RDA Maintenance Terminal UD105A4. | Set to active channel |
| 2 | PORT A | Not used. | N/A |
| 3 | PORT B | Port connects to RDA Processor UD5/105A12 via Convenience Panel UD5/105A16. | N/A |
| 4 | PORT C | Port connects to RDA CDT-100 Terminal UD5/105A4. | N/A |

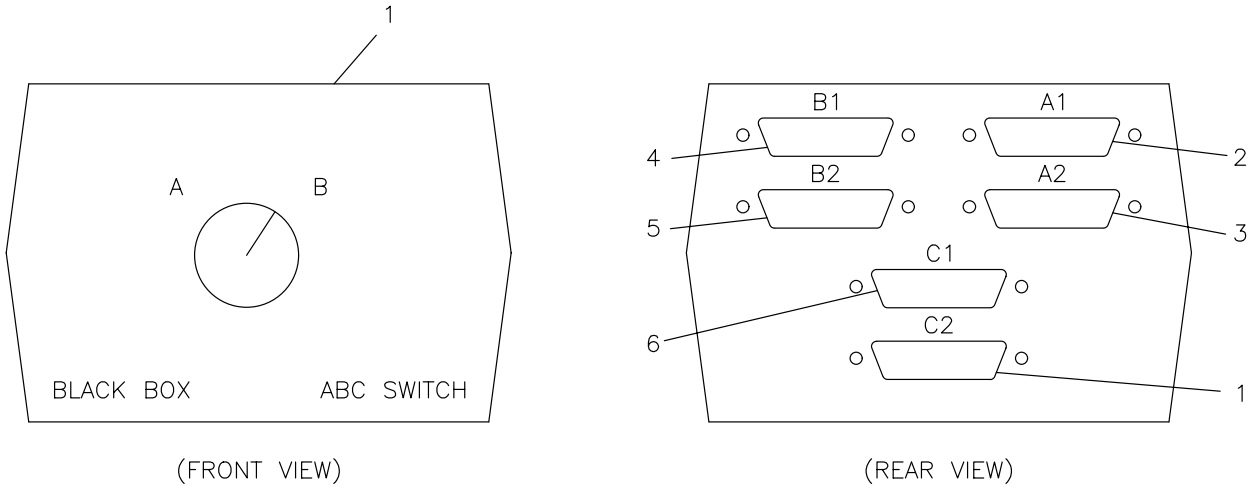


NX1832

Figure 4-21. Dual A/B Switch UD5A17, Controls and Indicators

Table 4-22. Dual A/B Switch UD5A17, Controls and Indicators

| Figure 4-21 Index No. | Control/ Indicator Nomenclature (Type) | Function | Normal Position/ State |
|---|---|---|---|
| 1 | A/B | In NWS redundant systems, “A” position connects the systems and applications ports of the RDA Data Processors UD5/105 to the RDA Maintenance Terminals. “B” position connects the systems and applications ports of the RDA Data Processors UD5/105 to the Remote RDA Maintenance Terminal UD32. | Set to active channel. |
| 2 | PORT A1 | Port connects to the RDA Maintenance Terminals | N/A |
| 3 | PORT A2 | Port connects to the RDA Maintenance Terminals | N/A |
| 4 | PORT B1 | Port connects to the Remote RDA Maintenance Terminal UD32 via STATMUX UD105A20 Port 3 | N/A |
| 5 | PORT B2 | Port connects to the Remote RDA Maintenance Terminal UD32 via STATMUX UD105A20 Port 4 | N/A |
| 6 | PORT C1 | Port connects to the RDA Data Processors UD5/105A12 via Convenience Panel UD5/105A16J0 | N/A |
| 7 | PORT C2 | Port connects to the RDA Data Processors UD5/105A12 via Convenience Panel UD5/105A16J1 | N/A |

Table 4-23. RDA Group Interlocks

| Item | Interlock Location | Functional Reference |
|---|---|---|
| 1 | Transmitter Cabinet UD3 | NWS EHB 6-511 |
| 2 | Radome Hatch UD11 | NWS EHB 6-550*/NWS EHB 6-553* |
| 3 | Antenna Interlock | NWS EHB 6-513*/NWS EHB 6-514* |
| 4 | Azimuth Drive UD2A1A3 | NWS EHB 6-513*/NWS EHB 6-514* |
| 5 | Elevation Drive UD2A1A1 | NWS EHB 6-513*/NWS EHB 6-514* |

- - - - -

* Site dependent

# Section 4-3. System Console Mode Operations

## 4-3.1 INTRODUCTION.

In the system console mode, the RDA maintenance terminal interfaces with the RDASC processor operating system (OS/32) to perform the following operations:

- RDA processor clock time set procedure
- Software installation
- RDA startup and shutdown
- RDA diagnostic
- RDASOT
- Miscellaneous disk/tape operations
- Initiate immediate RDA (system test) check procedure

**NOTE**

This section refers to the RDADP as UD5, the Receiver as UD4, the Transmitter as UD3, and the Waveguide Pressurization Unit as UD6. Unless otherwise specified, the information also applies to redundant systems UD105, UD104, UD103, and UD106.

This section provides the procedures for RDA processor clock synchronization, software installation, and miscellaneous disk/tape operations, as well as tables identifying the OS/32 command formats and operator command error messages. Operational OS/32 error messages and system errors are provided in Section 4-8. The system console mode operations covered in other sections are listed below:

- RDA startup and shutdown procedures (paragraph 6-5.3)
- RDA processor diagnostic procedures (Section 4-6)
- RDASOT procedures (Section 4-7)

## 4-3.2 MISCELLANEOUS DISK/TAPE OPERATIONS.

Disk/tape operations performed at the RDA maintenance terminal in the system console mode include the following:

- Disk/tape backup (See Table 4-24)
- Fastchek (See Table 4-26)
- Display File Names (See Table 4-27)

4-3.2.1 Disk/Tape Backup Procedure. The BACKUP utility is used to transfer data files from a disk to a tape cartridge for backup of information stored on the disk. The transfer of data can also be made from tape to disk. Perform the procedure in Table 4-24 at the system console for disk/tape backup. Refer to Table 4-25 for additional options used in the backup procedure.

Table 4-24. T4-Disk/Tape Backup Procedure

| Step | Action/Procedure | Response/Comments |
|---|---|---|
| | **NOTE**<br>Perform all entries at the RDA maintenance terminal.<br>For disk backup, insert blank cartridge tape and ensure the write protect is off. For downloading files from a tape, insert the proper cartridge tape, with the write protect set to SAFE. | |
| 1. | At the SCSI tape unit, insert cartridge tape in SCSI tape drive and slide the lever to the right (*or turn the lever to the vertical position) to secure it.<br>*dependent upon type of SCSI tape drive that is installed. | Ensure tape is secured in SCSI tape drive.<br>If the SCSI tape unit has a lever that is rotated to secure the tape in the tape drive, the tape will begin to rewind if necessary. Proceed to step 2.<br>If the SCSI tape unit has a lever that slides to secure the tape in the tape drive, the tape will begin to rewind, if necessary, during subsequent steps in the procedure. Proceed to step 2. |
| 2. | If Main Menu is displayed, proceed to step 3.<br>If Main Menu is not displayed, enter: **MAIN<Return>** at command entry line and proceed to step 3. | Main Menu appears on display. |
| 3. | At command entry line, enter:<br>**RELC<Return>** | Entering RELC sends a request to the RPG to allow the RDA to go to local control. To actually switch from remote to local control requires that the RPG enables local control. The sequence of the two commands does not matter. |

Table 4-24. T4-Disk/Tape Backup Procedure (Continued)

| Step | Action/Procedure | Response/Comments |
|---|---|---|
| 4. | At command entry line, enter:<br>**ARCH<Tab>D<Return>**<br>to ensure archive is idle. | `ARCH IGNORED COMMAND ENABLED OR IN PROGRESS`<br>will appear if archive is idle.<br><br>If archive is not idle, re-enter:<br>**ARCH<Tab>D<Return>**<br>`ARCH IGNORED COMMAND ENABLED OR IN PROGRESS`<br>will appear. |
| 5. | At command entry line, enter:<br>**STBY<Return>** | `STBY ACCEPTED` displays. |
| 6. | While in the application mode, enter:<br>**TERP** on the command line and ***password*** on the parameter(s) line and press **<Return>** | `TERP ACCEPTED` appears at lower left of screen.<br><br>Terminates application software. |
| 7. | Press the **<Shift>** and **<Port>** keys simultaneously | System console screen displays.<br><br>**Do not** continue until `TASK 02: END OF TASK 255` appears.<br><br>"`*`" prompt appears. |
| 8. | Enter:<br>**D TA<Return>** | If time is the only task displayed, proceed to step 10. If there are other tasks in memory, proceed to step 9. |
| 9. | Enter:<br>**CA *taskid*<Return>** | Cancels task. |
| 10. | At "`*`" prompt, enter:<br>**SE LO<Return>** | Cancels all system console logs. |
| 11. | At "`*`" prompt, enter:<br>**ERR LOG,OFF<Return>** | "`*`" appears.<br>Error logger is stopped. |

Table 4-24. T4-Disk/Tape Backup Procedure (Continued)

| Step | Action/Procedure | Response/Comments |
|---|---|---|
| 12. | To backup ***SELECTED FILES FROM DISK TO TAPE PROCEED TO STEP 13.***<br>To make a tape backup of the ***APPLICATIONS SOFTWARE AND OPERATING SYSTEM SOFTWARE PROCEED TO STEP 15.***<br>To backup ***SELECTED FILES FROM TAPE TO DISK PROCEED TO STEP 17.***<br>To download ***ALL FILES ON THE TAPE TO DISK, PROCEED TO STEP 19.*** | |
| 13. | To backup ***SELECTED FILES FROM DISK TO TAPE***, at "*" prompt, enter:<br>**LO BACKUP,5ØØ<Return>**<br>**ST<Return>**<br>At BACKUP> prompt, enter:<br>**IN=DSCØ:<Return>**<br>**OUT=STØ:<Return>**<br>**SEL=CON:<Return>**<br>**LI=CON:<Return>**<br>**SIZ=25Ø<Return>**<br>**VER<Return>**<br>**END<Return>**<br>Wait for BACKUP> prompt to appear.<br>Enter the file name(s) to copy, e.g.,<br>**ADAPT.DAT<Return>**<br>**ADAPTCUR.DAT<Return>**<br>**LONGTERM.DAT<Return>**<br>**RDACALIB.DAT<Return>**<br>**RDACLUT.DAT<Return>**<br>**RDABYPAS.DAT<Return>**<br>Proceed to step 14. | BACKUP> prompt appears.<br>If needed, tape will begin to rewind.<br>Tape may be rewinding. |

Table 4-24. T4-Disk/Tape Backup Procedure (Continued)

| Step | Action/Procedure | Response/Comments |
|---|---|---|
| 14. | To start the copy process, enter:<br>**./<Return>**<br><br>Proceed to step 21. | END OF TASK 0 is displayed when the backup is complete.<br>If the backup requires more than one tape, insert an additional tape cartridge and enter the following:<br>**T BACKUP <Return>** to task the BACKUP program.<br>**CO <Return>** to continue the BACKUP program. |
| 15. | To make a tape backup of the ***APPLICATIONS SOFTWARE AND OPERATING SYSTEM SOFTWARE***, at the "*" prompt, enter:<br>**LO BACKUP,5ØØ<Return>**<br>**ST<Return>**<br>At BACKUP> prompt, enter:<br>**IN=DSCØ:<Return>**<br>**OUT=STØ:<Return>**<br>**SEL=CON:<Return>**<br>**LI=CON:<Return>**<br>**SIZ=25Ø<Return>**<br>**VER<Return>**<br>**END<Return>**<br>Wait for BACKUP> prompt to appear.<br>Enter:<br>**-.-<Return>**<br>**!EXCLUDE *[file to be excluded]*<Return>**<br><br>Proceed to step 16. | BACKUP> prompt appears.<br>If needed, tape will begin to rewind.<br>Tape may be rewinding. |
| 16. | To start the copy process, enter:<br>**./<Return>**<br><br>Proceed to step 21. | END OF TASK 0 is displayed when the backup is complete.<br>If the backup requires more than one tape, insert an additional tape cartridge and enter the following:<br>**T BACKUP <Return>** to task the BACKUP program.<br>**CO <Return>** to continue the BACKUP program. |

Table 4-24. T4-Disk/Tape Backup Procedure (Continued)

| Step | Action/Procedure | Response/Comments |
|---|---|---|
| 17. | To backup ***SELECTED FILES FROM TAPE TO DISK***, at "*" prompt, enter:<br>**LO BACKUP,5ØØ<Return>**<br>**ST<Return>**<br>At BACKUP> prompt, enter:<br>**IN=STØ:<Return>**<br>**OUT=DSCØ:<Return>**<br>**SEL=CON:<Return>**<br>**LI=CON:<Return>**<br>**DEL/NOD<Return>**<br>**VER<Return>**<br>**END<Return>**<br>Wait for BACKUP> prompt to appear.<br>Enter the file name(s) to copy, e.g.,<br>**ADAPT.DAT<Return>**<br>Proceed to step 18. | BACKUP> prompt appears.<br>If needed, tape will begin to rewind.<br>Tape may be rewinding. |
| 18. | To start the copy process, enter:<br>**./<Return>**<br>Proceed to step 21. | END OF TASK 0 is displayed when the backup is complete.<br>If the backup requires more than one tape, insert an additional tape cartridge and enter the following:<br>**T BACKUP <Return>** to task the BACKUP program.<br>**CO <Return>** to continue the BACKUP program. |
| 19. | To ***DOWNLOAD ALL FILES ON THE TAPE***, at "*" prompt, enter:<br>**LO BACKUP,5ØØ<Return>**<br>**ST<Return>**<br>At BACKUP> prompt, enter:<br>**IN=STØ:<Return>**<br>**OUT=DSCØ:<Return>**<br>**LI=CON:<Return>**<br>**DEL/NOD<Return>**<br>**VER<Return>**<br>**END<Return>** | BACKUP> prompt appears.<br>If needed, tape will begin to rewind.<br>END OF TASK 0 is displayed when the backup is complete. |

Table 4-24. T4-Disk/Tape Backup Procedure (Continued)

| Step | Action/Procedure | Response/Comments |
|---|---|---|
| | Proceed to step 21. | If the backup requires more than one tape, insert an additional tape cartridge and enter the following:<br>**T BACKUP <Return>** to task the BACKUP program.<br>**CO <Return>** to continue the BACKUP program. |
| 20. | At "*" prompt, enter:<br>**ERR LOG,ON<Return>** | "*" appears. |
| 21. | When backup is completed, remove the tape and enter:<br>**RDAUP<Return>** | |
| 22. | Press the **<Shift>** and **<Port>** keys simultaneously | Returns RDA to normal operation. |

Table 4-25. Backup Format Options

*The [DEL], [DEL/NOD], and [SKIP] options permit defining a criteria for selecting files to be copied such as all or most recent.

| | | |
|---|---|---|
| where | ST | = Start command |
| | IN | = Input (source tape or disk) |
| | OUT | = Output (target tape or disk) |
| | LI | = List device |
| | SIZ | = Size of space for transferred data in kilobytes |
| | SEL | = Select option<br>(used to select files for backup, normally console is selected (SEL=CON:)) |
| | ACC | = Account option where # is destination account number if it is different from source account number. |
| | *DEL | = Delete option<br>(If input newer than output, delete OUT, restore IN to OUT) |
| | *DEL/NOD | = Delete/no date option (unconditional, delete OUT, restore IN to OUT) |
| | *SKIP | = Skip option (unconditional, do not restore IN to OUT) |
| | VER | = Verify option |
| | dev | = Device (tape, disk, console, printer) |
| | where | tape = STØ:<br>disk = DSCØ:<br>console = CON:<br>printer = LPØ: |

**NOTE**

When select option (SEL) is used, the console screen will display the BACKUP> prompt. At this time the select options can be entered prior to execution of backup. The select options allow for complete or partial backup.

Entering Select Options (Examples)

At BACKUP> prompt, enter one of the following:

| | |
|---|---|
| -.-/Ø<Return> | All files on account Ø |
| -.FTN/1Ø6<Return> | All FTN files on account 1Ø6 |
| DSC -.-/-<Return> | All files starting with DSC in all accounts |
| !Exclude -.DAT/Ø<Return> | Omit files with DAT extension on account Ø |
| ./<Return> | End Input. |

Table 4-25. Backup Format Options (Continued)

**NOTE**

When ./ is entered, the program will execute.

Backup Examples

1. Backup of a file (PROD.DAT) from disk to tape and verifying backup:
   LO BACKUP,5ØØ<Return>
   ST<Return>
   IN=DSCØ:<Return>
   OUT=STØ:<Return>
   LI=CON:<Return>
   SEL=CON:<Return>
   SIZ=25Ø<Return>
   VER<Return>
   END<Return>
   At BACKUP> prompt, enter:
   PROD.DAT<Return>
   ./<Return>

2. Backup of entire disk to tape and verify backup:
   LO BACKUP,5ØØ<Return>
   ST<Return>
   IN=DSCØ:<Return>
   OUT=STØ:<Return>
   LI=CON:<Return>
   VER<Return>
   END<Return>

3. Loading all files in account Ø to disk from a full backup tape without verifying:
   LO BACKUP,5ØØ<Return>
   ST<Return>
   IN=STØ:<Return>
   OUT=DSCØ:<Return>
   LI=CON:<Return>
   SIZ=25Ø<Return>
   DEL/NOD<Return>
   ACC=Ø<Return>
   END<Return>

4-3.2.2 Fastchek Procedure. The Fastchek procedure is used to troubleshoot the hard disk. Perform the procedures in Table 4-26 for Fastchek.

Table 4-26. Fastchek Procedure

| Step | Action/Procedure | Response/Comments |
|---|---|---|
| | **NOTE**<br>Perform all steps at the RDA maintenance terminal. | |
| 1. | At command entry line, enter:<br>**ARCH<Tab>D<Return>**<br>to ensure archive is idle. | `ARCH IGNORED COMMAND ENABLED OR IN PROGRESS` will appear if archive is idle.<br><br>If archive is not idle, re-enter:<br>**ARCH<Tab>D<Return>**<br>`ARCH IGNORED COMMAND ENABLED OR IN PROGRESS` will appear. |
| 2. | At command entry line, enter:<br>**STBY<Return>** | `STBY ACCEPTED` displays. |
| 3. | While in the application mode, enter:<br>**TERP** on the command line and ***password*** on the parameter(s) line and press **<Return>** | `TERP ACCEPTED` appears at lower left of screen.<br><br>Terminates application software. |
| 4. | Press the <**Shift>** and **<Port>** keys simultaneously | System console mode screen displays.<br><br>**Do not** continue until `TASK 02: END OF TASK 255` appears.<br><br>"`*`" prompt appears. |
| 5. | At "`*`" prompt, enter:<br>**D TA<Return>** | If time is the only task displayed, proceed to step 7. If there are other tasks in memory, proceed to step 6. |
| 6. | At "`*`" prompt, enter:<br>**CA *taskid*<Return>** | Terminates applications tasks. |
| 7. | At "`*`" prompt, enter:<br>**SE LO<Return>** | Cancels all system console logs. |
| 8. | At "`*`" prompt, enter:<br>**ERR LOG,OFF<Return>** | "`*`" appears.<br>Error logger is stopped. |
| 9. | At "`*`" prompt, enter:<br>**MA DSCØ:,OFF<Return>** | "`*`" appears.<br>Disk is marked off. |
| 10. | At "`*`" prompt, enter:<br>**MA DSCØ:,ON,P<Return>** | `DSCØ: SYSØ PROT` appears.<br>Disk is marked on in the protect mode. |

Table 4-26. Fastchek Procedure (Continued)

| Step | Action/Procedure | Response/Comments |
|---|---|---|
| 11. | At "*" prompt, enter:<br>**LO FASTCHEK,2ØØ<Return>** | TASKID = FASTCHEK appears.<br>Loads FASTCHEK program. |
| 12. | At "*" prompt, enter:<br>**MA DSCØ:,OFF<Return>** | "*" appears.<br>Disk is marked off. |
| 13. | At "*" prompt, enter:<br>**ST<Return>** | Starts FASTCHEK.<br>FASTCHEK: Concurrent Computer Corp OS/32 FASTCHEK 03-344 R08-03.1 appears, followed by F:Function (INITialize, CHeck or REName) Devn:?.<br><br>*FASTCHEK> prompt appears. |
| 14. | At *FASTCHEK> prompt, enter:<br>**CH DSCØ:<Return>** | FASTCHEK:Mode (#CLOse, CLOSEOnly, NOReadcheck or REAdcheck)? appears. Checks disk under test. |
| 15. | At *FASTCHEK> prompt, enter:<br>**REA<Return>** | FASTCHEK: Extend Index Files (#No or Yes)? appears.<br>Enters READCHEK mode. |
| 16. | At *FASTCHEK> prompt, enter:<br>a **carriage return** for every option after REA until OK TO RUN (Yes or No?) appears. | OK TO RUN (Yes or No)? appears. |
| 17. | At *FASTCHEK> prompt, enter:<br>**Y<Return>** | When "*" prompt appears, FASTCHEK is running. Test takes about 5 minutes to complete. If disk passes, END OF TASK 0 message appears. |
| 18. | At "*" prompt, enter:<br>**MA DSCØ:,ON,,CD=AL<Return>** | "*" appears.<br>Disk is marked on. |
| 19. | At "*" prompt, enter:<br>**ERR LOG,ON<Return>** | "*" appears. |
| 20. | At "*" prompt, enter:<br>**RDAUP<Return>**<br><br>Press the **<Shift>** and **<Port>** keys simultaneously. | Returns RDA to normal operation. |

4-3.2.3 Display File Names Procedure. Perform the procedure in Table 4-27 to display the file names on a cartridge tape.

Table 4-27. Display File Names Procedure

| Step | Action/Procedure | Response/Comments |
|---|---|---|
| | **NOTE**<br>This procedure will work only on cartridge tapes that have a backup file on them. Set the write protect to SAFE. | |
| 1. | At command entry line, enter:<br>**ARCH<Tab>D<Return>**<br>to ensure archive is idle. | `ARCH IGNORED COMMAND ENABLED OR IN PROGRESS` will appear if archive is idle.<br><br>If archive is not idle, re-enter:<br>**ARCH<Tab>D<Return>**<br>`ARCH IGNORED COMMAND ENABLED OR IN PROGRESS` will appear. |
| 2. | At command entry line, enter:<br>**STBY<Return>** | `STBY ACCEPTED` displays. |
| 3. | While in the application mode, enter:<br>**TERP** on the command line and ***password*** on the parameter(s) line and press **<Return>** | `TERP ACCEPTED` appears at lower left of screen.<br>Terminates application software. |
| 4. | Press the **<Shift>** and **<Port>** keys simultaneously | System console mode screen displays.<br><br>**Do not** continue until `TASK 02: END OF TASK 255` appears.<br><br>"`*`" prompt appears. |
| 5. | At the SCSI tape unit, insert tape to be read in SCSI tape drive and slide the lever to the right (* or turn the lever to the vertical position) to secure it.<br><br>*dependent upon type of SCSI tape drive that is installed. | Ensure tape is secured in SCSI tape drive.<br><br>If the SCSI tape unit has a lever that is rotated to secure the tape in the tape drive, the tape will begin to rewind if necessary. Proceed to step 6.<br><br>If the SCSI tape unit has a lever that slides to secure the tape in the tape drive, the tape will begin to rewind, if necessary, during subsequent steps in the procedure. Proceed to step 6. |

Table 4-27. Display File Names Procedure (Continued)

| Step | Action/Procedure | Response/Comments |
|---|---|---|
| 6. | To ***DISPLAY THE FILE NAMES OF ALL FILES ON THE TAPE PROCEED TO STEP 7.***<br><br>To ***DISPLAY THE FILE NAMES OF SELECTED FILES ON THE TAPE PROCEED TO STEP 8.*** | |
| 7. | At "*" prompt, (in system console mode), enter:<br><br>**LO BACKUP,5ØØ<Return>**<br>**ST<Return>**<br><br>At BACKUP> prompt, enter:<br><br>**IN=STØ:<Return>**<br>**LI=CON:<Return>**<br>**REP<Return>**<br>**END<Return>**<br><br>Proceed to step 10. | BACKUP> prompt appears.<br><br>If needed, tape will begin to rewind.<br><br>Observe files displayed on screen.<br>Use <Ctrl> S to stop scrolling of screen and <Ctrl> Q to continue scrolling.<br><br>END OF TASK 0 is displayed when the tape read is complete. |

Table 4-27. Display File Names Procedure (Continued)

| Step | Action/Procedure | Response/Comments |
|---|---|---|
| 8. | At "*" prompt, (in system console mode), enter:<br><br>**LO BACKUP,5ØØ<Return>**<br>**ST<Return>**<br><br>At BACKUP> prompt, enter:<br><br>**IN=STØ:<Return>**<br>**LI=CON:<Return>**<br>**SEL=CON:<Return>**<br>**REP<Return>**<br>**END<Return>**<br><br>Wait for BACKUP> prompt to appear.<br><br>Enter the file name(s) to read (e.g., ADAPT.DAT<Return> HYOCCULT.DAT<Return>)<br><br>Proceed to step 9. | BACKUP> prompt appears.<br><br>If needed, tape will begin to rewind.<br><br>Tape may be rewinding. |
| 9. | Enter:<br>**./<Return>**<br><br>Proceed to step 10. | Observe files displayed on screen. Use <Ctrl> S to stop scrolling of screen and <Ctrl> Q to continue scrolling.<br><br>END OF TASK 0 is displayed when the tape read is complete. |
| 10. | At SCSI tape unit, remove tape from SCSI tape drive. | |
| 11. | At "*" prompt, enter:<br>**RDAUP<Return>**<br><br>Press the **<Shift>** and **<Port>** keys simultaneously | Returns RDA to normal operation. |

### 4-3.3 RDA DATA PROCESSOR CLOCK TIME SET PROCEDURE.

Perform the procedure in Table 4-28 to synchronize the RDA Processor Time of Day Clock to Coordinated Universal Time (UTC). One source of time is the Naval Observatory at (202) 762-1401. If local time of day service is used, be sure to convert time to UTC. Always enter time as UTC at the top of the minute (Ø seconds). ZULU and GMT are other terms used for UTC.

Table 4-28. RDA Data Processor Clock Time Set Procedure

| Step | Action/Procedure | Response/Comments |
|---|---|---|
| 1. | At command entry line, enter:<br>**ARCH<Tab>D<Return>**<br>to ensure archive is idle. | `ARCH IGNORED COMMAND ENABLED OR IN PROGRESS` will appear if archive is idle.<br><br>If archive is not idle, re-enter:<br>**ARCH<Tab>D<Return>**<br>`ARCH IGNORED COMMAND ENABLED OR IN PROGRESS` will appear. |
| 2. | At command entry line, enter:<br>**STBY<Return>** | `STBY ACCEPTED` displays. |
| 3. | While in the application mode, enter:<br>**TERP** on the command line and ***password*** on the parameter(s) line and press **<Return>** | `TERP ACCEPTED` appears at lower left of screen.<br><br>Terminates application software. |
| 4. | At the RDA maintenance terminal (in application mode), press the <**Shift>** and **<Port>** keys **simultaneously** | System console mode screen displays.<br><br>**Do not** continue until `TASK 02: END OF TASK 255` appears.<br><br>"`*`" prompt appears. |
| 5. | At "`*`" prompt, while depressing the <**Ctrl>** key press the **V** key twice, then press **<Return>** until `CDS>` prompt appears. | `CDS>` prompt appears. |
| 6. | At the `CDS>` prompt, enter:<br>**KEY 1,*password*<Return>** | ***password*** default is RDA. |

**NOTE**

Must set CDS time to UTC time to synchronize the RDA Processor Time of Day Clock to UTC. One accurate source of time is the Naval Observatory at (202) 762-1401. If local time of day service is used, be sure to convert local time to UTC prior to input.

Table 4-28. RDA Data Processor Clock Time Set Procedure (Continued)

| Step | Action/Procedure | Response/Comments |
|---|---|---|
| 7. | At CDS> prompt, enter:<br>**TI U,DAY,*MM/DD/YYYY,hh:mm*,P** | DAY = First three letters (e.g. TUE)<br>MM = 2 digit month (Ø1 - 12)<br>DD = 2 digit day (Ø1 - 31)<br>YYYY = 4 digit year; a 2 digit year defaults to 19xx (e.g., 2000=2000, 95=1995)<br>hh = UTC hour (ØØ - 23)<br>mm = 2 digit minute (ØØ - 59)<br><br>Be sure to enter UTC time. |
| 8. | At the tone from the time source corresponding to the time entered in step 7, press **<Return>** | Sets the time entered. |
| 9. | At CDS> prompt, enter:<br>**TI<Return>** | Verify CDS clock time is correct. If date and time are incorrect return to step 7. |
| 10. | At CDS> prompt, enter:<br>**CO**, and press **<Return>** until the "*" prompt appears. | System console mode screen displays.<br><br>"*" prompt appears. |
| 11. | At the "*" prompt, enter:<br>**CA TIME<Return>** | Stops the time of day program. |
| 12. | At the "*" prompt, enter:<br>**BGLSETU<Return>** | SETIME> prompt appears.<br>Loads set time program. |
| 13. | At the SETIME> prompt, enter:<br>***MM/DD/YY,hh:mm:ss*** | Enter the time to the next minute and seconds as ØØ.<br><br>Be sure to enter UTC time. |
| 14. | At the tone from the time source corresponding to the time entered in step 13, press **<Return>** | SETTIME: END OF TASK message appears. |
| 15. | At the "*" prompt, enter:<br>**BGLSTART<Return>** | Starts time of day program. |
| 16. | At the "*" prompt, enter:<br>**D T<Return>** | Verify RDA processor time is correct. If date or time is incorrect, repeat steps 5 through 16. |
| 17. | At the "*" prompt, enter:<br>**D TA<Return>** | If time is the only task displayed, proceed to step 19. If there are other tasks in memory, proceed to step 18. |

Table 4-28. RDA Data Processor Clock Time Set Procedure (Continued)

| Step | Action/Procedure | Response/Comments |
|---|---|---|
| 18. | At the "*" prompt, enter:<br>**CA *taskid*<Return>** | Terminates application tasks. |
| 19. | At the "*" prompt, enter:<br>**SE LO<Return>** | Cancels all system console logs. |
| 20. | At the "*" prompt, enter:<br>**ERR LOG,OFF<Return>** | "*" appears.<br>Error logger is stopped. |
| 21. | At the "*" prompt, enter:<br>**MA DSCØ:,OFF<Return>** | "*" appears.<br>Disk is marked off. |
| 22. | At the "*" prompt, enter:<br>**D D/D<Return>** | DSC0 D9 0000 OFF appears. |
| 23. | At the "*" prompt, while depressing the <**Ctrl>** key press the **V** key twice, then press **<Return>** until CDS> prompt appears. | CDS> prompt appears. |
| 24. | At the CDS> prompt, enter:<br>**HALT<Return>** | CPU halted. |
| 25. | At the CDS> prompt, enter:<br>**PO OFF<Return>** | CDS> prompt appears.<br>Turns off DC power supplies. |
| 26. | At the CDS> prompt, enter:<br>**PO ON<Return>** | Turns on DC power supplies. RDA starts initial bootup. In approximately 60 seconds the message BASIC CONFIDENCE TEST COMPLETE appears and IPC countdown begins. |
| 27. | Press the **<Shift>** and **<Port>** keys **simultaneously** | Returns RDA to normal operation. |

## 4-3.4 SOFTWARE INSTALLATION TAPE LOADING PROCEDURE.

If a disk is replaced due to maintenance actions, new software needs to be loaded, or if the software is loaded at a new site, the installation tape loading procedure must be used to place the system into an operating condition. The procedure in Table 4-29 will load the operating system software and the associated software.

Table 4-29. Software Installation Tape Loading Procedure

**CAUTION**

This procedure will erase all existing files from the disk prior to the introduction of the new software. Disk backups must be made before performing this procedure.

**NOTE**

All processors in the system should be set to the same UTC date and time. This can be accomplished during processor initialization.

**1. SOFTWARE TAPES REQUIRED.**

A. The following tapes are required to complete the software installation tape loading procedure:
   1. RDA Dead System
   2. RDA Operating System
   3. RDA Applications Software
   4. RDA Adaptation Data

**2. LOAD SOFTWARE TAPES.**

**A. INITIALIZE RDA**

| | Step | Action/Procedure | Response/Comments |
|---|---|---|---|

**NOTE**

Perform all entries at the RDA maintenance terminal.

Ensure that the A/B switch (switch A17) is in position B, Operational/RDA Maintenance.

Ensure the write protect switch on the Dead System tape is set to SAFE.

Table 4-29. Software Installation Tape Loading Procedure (Continued)

**2. LOAD SOFTWARE TAPES.**

**A. INITIALIZE RDA**

| | Step | Action/Procedure | Response/Comments |
|---|---|---|---|
| | 1. | At the SCSI tape unit, insert the Dead System tape in SCSI tape drive and slide the lever to the right (*or turn the lever to the vertical position) to secure it.<br><br>*dependent upon type of SCSI tape drive that is installed. | Ensure tape is secured in SCSI tape drive.<br><br>If the SCSI tape unit has a lever that is rotated to secure the tape in the tape drive, the tape will begin to rewind if necessary. Proceed to step 2.<br><br>If the SCSI tape unit has a lever that slides to secure the tape in the tape drive, the tape will begin to rewind, if necessary, during subsequent steps in the procedure. Proceed to step 2. |
| | 2. | If Main Menu is displayed, proceed to step 3. If Main Menu is not displayed, enter: **MAIN<Return>** at command entry line and proceed to step 3. | Main Menu appears on display. |
| | 3. | At the command entry line, enter: **RELC<Return>** to request local control. | Entering RELC sends a request to the RPG to allow the RDA to go to local control. To actually switch from remote to local control requires that the RPG enables local control. The sequence of the two commands does not matter. |
| | 4. | At command entry line, enter: **ARCH<Tab>D<Return>** to ensure archive is idle. | `ARCH IGNORED COMMAND ENABLED OR IN PROGRESS` will appear if archive is idle.<br><br>If archive is not idle, re-enter: **ARCH<Tab>D<Return>** `ARCH IGNORED COMMAND ENABLED OR IN PROGRESS` will appear. |
| | 5. | At command entry line, enter: **STBY<Return>** | `STBY ACCEPTED` displays. |

Table 4-29. Software Installation Tape Loading Procedure (Continued)

**2. LOAD SOFTWARE TAPES.**

**A. INITIALIZE RDA**

| | Step | Action/Procedure | Response/Comments |
|---|---|---|---|
| | 6. | While in the application mode, enter: **TERP** on the command line and ***password*** on the parameter(s) line and press **<Return>** | `TERP ACCEPTED` appears at lower left of screen.<br><br>Terminates application software. |
| | 7. | Press the **<Shift>** and **<Port>** keys **simultaneously** | System console mode screen displays.<br><br>**Do not** continue until `TASK 02: END OF TASK 255` appears.<br><br>"*" prompt appears. |
| | 8. | At the "*" prompt, enter: **D TA<Return>** | If time is the only task displayed, proceed to step 10. If there are other tasks in memory, proceed to step 9. |
| | 9. | At the "*" prompt, enter: **CA *taskid*<Return>** | Terminates application tasks. |

**CAUTION**

The following steps will erase all existing files from the disk prior to the introduction of the new software. Disk backups of data files must be made before performing the following steps.

| | | | |
|---|---|---|---|
| | 10. | At the "*" prompt, enter: **SE LO<Return>** | Cancels all system console logs. |
| | 11. | At the "*" prompt, enter: **ERR LOG,OFF<Return>** | "*" appears.<br>Error logger is stopped. |
| | 12. | At the "*" prompt, enter: **MA DSCØ:,OFF<Return>** | "*" appears.<br>Disk is marked off. |
| | 13. | At the "*" prompt, enter: **D D/D<Return>** | `DSC0 D9 0000 OFF` appears. |
| | 14. | At the "*" prompt, while depressing the **<Ctrl>** key press the **V** key twice, then press **<Return>** until CDS> prompt appears. | `CDS>` prompt appears. |
| | 15. | At the `CDS>` prompt, enter: **KEY 1,*password*<Return>** | ***password*** default is RDA. |
| | 16. | At the `CDS>` prompt, enter: **HALT<Return>** | CPU halted. |

Table 4-29. Software Installation Tape Loading Procedure (Continued)

**2. LOAD SOFTWARE TAPES.**

**A. INITIALIZE RDA**

| | Step | Action/Procedure | Response/Comments |
|---|---|---|---|
| | 17. | At the CDS> prompt, enter:<br>**PO OFF<Return>** | CDS> prompt appears.<br>Turns off DC power supplies. |

**NOTE**

After the execution of step 18, the RDA will start its initial bootup. The message Basic Confidence Test Complete will appear approximately 60 seconds after the execution of step 18 and the IPC countdown will begin. Press the **<Break>** key **as soon as** the IPC countdown begins to prevent the system from booting from the disk.

If the **<Break>** key is not pressed before the system starts booting from the disk, allow the boot process to complete and return to step 5.

| | | | |
|---|---|---|---|
| | 18. | At the CDS> prompt, enter:<br>**PO ON<Return>** | Turns on DC power supplies. RDA starts initial bootup. In approximately 60 seconds the message BASIC CONFIDENCE TEST COMPLETE appears and IPC countdown begins. |
| | 19. | At the CDS> prompt, press the **<Break>** key **as soon as** the IPC countdown begins. | ENTRY= appears. |
| | 20. | At the ENTRY= prompt, enter:<br>**1<Return>** | Update CDS Configuration Table? (Y/N) appears. |
| | 21. | At the Update CDS Configuration Table? (Y/N) prompt, enter: **N<Return>** | FILEMARKS= appears. |
| | 22. | At the FILEMARKS= prompt, enter:<br>**Ø<Return>** | Tape will begin loading. It will take approximately 1 minute to complete the load. When loading is complete, prompt to enter time appears. |

Table 4-29. Software Installation Tape Loading Procedure (Continued)

**2. LOAD SOFTWARE TAPES.**

**A. INITIALIZE RDA**

| | Step | Action/Procedure | Response/Comments |
|---|---|---|---|
| | 23. | At the "*" prompt, enter:<br>**SE TI *MM/DD/YY,hh:mm:ss* <Return>** | Use the following format for date and time entries: (Use UTC date and time. The Naval Observatory at (202) 762-1401 is an accurate source for time.)<br><br>MM = 2 digit month (Ø1-12)<br>DD = 2 digit day (Ø1-31)<br>YY = 2 digit year (95 = 1995)<br>hh = UTC hour (ØØ-23)<br>mm = 2 digit minute (ØØ-59)<br>ss* = System Default is ØØ<br><br>* (ØØ must be entered) |
| | 24. | At the "*" prompt, enter:<br>**$CON<Return>** | If TASK PAUSED is displayed along with a message to adjust time, enter the following with the corrected date and time:<br>a. Enter: **SE TI *MM/DD/YY,hh:mm:ss* <Return>**<br>b. Enter: **T .BG<Return>**<br>c. Enter: **$CON<Return>** |

**NOTE**

Tape will continue loading for approximately 14 minutes. When the tape is loaded, the following will appear on the system console:

```
******  (1) REMOVE DEAD SYSTEM TAPE FROM STØ: ******
******  (2) MOUNT SYSTEM TAPE IN STØ: ******
******  (3) UNPACK SYSTEM TAPE BY ENTERING UNPACK ******
```

| | | | |
|---|---|---|---|
| | 25. | At the SCSI tape unit, remove Dead System tape from SCSI tape drive. | |

Table 4-29. Software Installation Tape Loading Procedure (Continued)

| | | | |
|---|---|---|---|
| **2.** | **LOAD SOFTWARE TAPES.** | | |
| | **B. LOAD RDA OPERATING SYSTEM TAPE** | | |
| | **Step** | **Action/Procedure** | **Response/Comments** |
| | | **NOTE**<br>Ensure the write protect switch on the RDA Operating System tape is set to SAFE. | |
| | 1. | At the SCSI tape unit, insert the RDA Operating System tape in SCSI tape drive and slide the lever to the right (*or turn the lever to the vertical position) to secure it.<br>*dependent upon type of SCSI tape drive that is installed. | Ensure tape is secured in SCSI tape drive.<br>If the SCSI tape unit has a lever that is rotated to secure the tape in the tape drive, the tape will begin to rewind if necessary. Proceed to step 2.<br>If the SCSI tape unit has a lever that slides to secure the tape in the tape drive, the tape will begin to rewind, if necessary, during subsequent steps in the procedure. Proceed to step 2. |
| | 2. | Enter:<br>**UNPACK<Return>** | The system takes approximately 3 minutes to load and verify data.<br>If `TASK PAUSED` is displayed, cancel BACKUP TASK by entering:<br>**CA BACKUP<Return>** and enter:<br>**UNPACK<Return>**.<br>When system load is complete, `TAPE UNPACK PROCESS COMPLETED` appears. |
| | 3. | At the SCSI tape unit, remove tape from SCSI tape drive. | |

Table 4-29. Software Installation Tape Loading Procedure (Continued)

| | | | |
|---|---|---|---|
| **2.** | **LOAD SOFTWARE TAPES.** | | |
| | **C. LOAD RDA APPLICATIONS SOFTWARE TAPE** | | |
| | **Step** | **Action/Procedure** | **Response/Comments** |
| | | **NOTE**<br>Ensure the write protect switch on the RDA Applications Software tape is set to SAFE. | |
| | 1. | At the SCSI tape unit, insert the RDA Applications Software tape in SCSI tape drive and slide the lever to the right (*or turn the lever to the vertical position) to secure it.<br>*dependent upon type of SCSI tape drive that is installed. | Ensure tape is secured in SCSI tape drive.<br>If the SCSI tape unit has a lever that is rotated to secure the tape in the tape drive, the tape will begin to rewind if necessary. Proceed to step 2.<br>If the SCSI tape unit has a lever that slides to secure the tape in the tape drive, the tape will begin to rewind, if necessary, during subsequent steps in the procedure. Proceed to step 2. |
| | 2. | Enter:<br>**UNPACK<return>** | The system takes approximately 8 minutes to load and verify data.<br>If `TASK PAUSED` is displayed, cancel BACKUP TASK by entering:<br>**CA BACKUP<Return>** and enter:<br>**UNPACK<Return>**.<br>When system load is complete, `TAPE UNPACK PROCESS COMPLETED` appears. |
| | 3. | At the SCSI tape unit, remove tape from SCSI tape drive. | |

Table 4-29. Software Installation Tape Loading Procedure (Continued)

| | | | |
|---|---|---|---|
| **2.** | **LOAD SOFTWARE TAPES.** | | |
| | **D. LOAD RDA ADAPTATION DATA TAPE** | | |
| | **Step** | **Action/Procedure** | **Response/Comments** |
| | | **NOTE**<br>Ensure the write protect switch on the RDA Adaptation Data tape is set to SAFE. | |
| | 1. | At the SCSI tape unit, insert the RDA Adaptation Data tape in SCSI tape drive and slide the lever to the right (*or turn the lever to the vertical position) to secure it.<br>*dependent upon type of SCSI tape drive that is installed. | Ensure tape is secured in SCSI tape drive.<br>If the SCSI tape unit has a lever that is rotated to secure the tape in the tape drive, the tape will begin to rewind if necessary. Proceed to step 2.<br>If the SCSI tape unit has a lever that slides to secure the tape in the tape drive, the tape will begin to rewind, if necessary, during subsequent steps in the procedure. Proceed to step 2. |
| | 2. | Enter:<br>**UNPACK<Return>** | The system takes approximately 1 minute to load and verify data.<br>If `TASK PAUSED` is displayed, cancel BACKUP TASK by entering:<br>**CA BACKUP<Return>** and enter:<br>**UNPACK<Return>**.<br>When system load is complete, `TAPE UNPACK PROCESS COMPLETED` appears. |
| | 3. | At the SCSI tape unit, remove tape from SCSI tape drive. | |

Table 4-29. Software Installation Tape Loading Procedure (Continued)

**2. LOAD SOFTWARE TAPES.**

**E. REBOOT RDA**

| | Step | Action/Procedure | Response/Comments |
|---|---|---|---|
| | 1. | At the "*" prompt, enter:<br>**MA DSCØ:,OFF<Return>** | "*" prompt appears.<br>Disk is marked off. |
| | 2. | At the "*" prompt, enter:<br>**D D/D<Return>** | DSC0 D9 0000 OFF appears. |
| | 3. | At the "*" prompt, while depressing the <**Ctrl>** key press the **V** key twice, then press **<Return>** until CDS> prompt appears. | CDS> prompt appears. |
| | 4. | At the CDS> prompt, enter:<br>**HALT<Return>** | CPU halted. |
| | 5. | At the CDS> prompt, enter:<br>**PO OFF<Return>** | CDS> prompt appears.<br>Turns off DC power supplies. |
| | 6. | At the CDS> prompt, enter:<br>**PO ON<Return>** | Turns on DC power supplies.<br>RDA starts initial bootup. It will take approximately 2 minutes for the OS to reboot. The RDA is now ready for operations. |
| | 7. | Press the **<Shift>** and **<Port>** keys **simultaneously**. | System console screen displays. |
| | 8. | Perform the RDA Data Processor Clock Time Set Procedure in Table 4-28. | Sets the time on the RDA. |

**3. LOAD SITE SPECIFIC DATA FILES FROM BACKUP TAPES TO DISK.**

**NOTE**

This procedure applies only to upward compatible adaptation data.

**A. LOAD PUP BACKGROUND MAP TAPE**

| | Step | Action/Procedure | Response/Comments |
|---|---|---|---|
| | 1. | If Main Menu is displayed, proceed to step 2. If Main Menu is not displayed, enter:<br>**MAIN<Return>** at command entry line and proceed to step 2. | Main Menu appears on display. |

Table 4-29. Software Installation Tape Loading Procedure (Continued)

**3. LOAD SITE SPECIFIC DATA FILES FROM BACKUP TAPES TO DISK.**

**A. LOAD PUP BACKGROUND MAP TAPE**

| | Step | Action/Procedure | Response/Comments |
|---|---|---|---|
| | 2. | At the command entry line, enter: **RELC<Return>** | Entering RELC sends a request to the RPG to allow the RDA to go to local control. To actually switch from remote to local control requires that the RPG enables local control. The sequence of the two commands does not matter. |
| | 3. | At the command entry line, enter: **STBY<Return>** | `STBY ACCEPTED` displays. |
| | 4. | At the command entry line, enter: **ICRA<Tab>** and **HIGH** on the parameter line and press **<Return>**. | Adaptation menu appears. |
| | 5. | Enter: **CF** | Closes the file for the next restart. |
| | 6. | Enter: **C** | To select current. |
| | 7. | While in the application mode, enter: **TERP** on the command line and ***password*** on the parameter(s) line and press **<Return>** | `TERP ACCEPTED` appears at lower left of screen.<br><br>Terminates application software. |
| | 8. | Press the **<Shift>** and **<Port>** keys **simultaneously**. | System console mode screen displays.<br><br>**Do not** continue until `TASK 02: END OF TASK 255` appears.<br><br>"`*`" prompt appears. |

Table 4-29. Software Installation Tape Loading Procedure (Continued)

| | | | |
|---|---|---|---|
| **3.** | **LOAD SITE SPECIFIC DATA FILES FROM BACKUP TAPES TO DISK.** | | |
| | **A. LOAD PUP BACKGROUND MAP TAPE** | | |
| | **Step** | **Action/Procedure** | **Response/Comments** |
| | 9. | At the SCSI tape unit, place the locally produced RDA SCSI backup tape in SCSI tape drive and slide the lever to the right (*or turn the lever to the vertical position) to secure it.<br><br>*dependent upon type of SCSI tape drive that is installed. | Ensure tape is secured in SCSI tape drive.<br><br>If the SCSI tape unit has a lever that is rotated to secure the tape in the tape drive, the tape will begin to rewind if necessary. Proceed to step 10.<br><br>If the SCSI tape unit has a lever that slides to secure the tape in the tape drive, the tape will begin to rewind, if necessary, during subsequent steps in the procedure. Proceed to step 10. |
| | 10. | At "*" prompt, (in system console mode), enter:<br>**D TA<Return>** | If time is the only task displayed, proceed to step 12. If there are other tasks in memory, proceed to step 11. |
| | 11. | At "*" prompt, enter:<br>**CA *taskid*<Return>** | Terminates applications tasks. |
| | 12. | At the "*" prompt, enter:<br><br>**LO BACKUP,5ØØ<Return>**<br>**ST<Return>**<br><br>At BACKUP> prompt, enter:<br><br>**IN=STØ:<Return>**<br>**OUT=DSCØ:<Return>**<br>**SEL=CON:<Return>**<br>**LI=CON:<Return>**<br>**DEL/NOD<Return>**<br>**VER<Return>**<br>**END<Return>**<br><br>Wait for BACKUP> prompt to appear. | BACKUP> prompt appears.<br><br>If needed, tape will begin to rewind.<br><br>Tape may be rewinding. |

Table 4-29. Software Installation Tape Loading Procedure (Continued)

| **3. LOAD SITE SPECIFIC DATA FILES FROM BACKUP TAPES TO DISK.** | | | |
|---|---|---|---|
| | **A. LOAD PUP BACKGROUND MAP TAPE** | | |
| | **Step** | **Action/Procedure** | **Response/Comments** |
| | 13. | At `BACKUP>` prompt, enter the file name(s) to copy, e.g.,<br><br>**LONGTERM.DAT<Return>**<br>**RDACLUT.DAT<Return>**<br>**RDACALIB.DAT<Return>**<br>**RDABYPAS.DAT<Return>**<br>**ADAPTCUR.DAT<Return>**<br><br>Proceed to step 14. | |
| | 14. | To start the copy process, enter:<br>**./<Return>** | Copy process begins.<br>When transfer of files is complete, `END OF TASK 0` appears. |
| | 15. | At the SCSI tape unit, remove tape from SCSI tape drive. | |
| | 16. | Enter:<br>**RDAUP<Return>** | |
| | 17. | **Simultaneously** press the **<Shift>** and **<Port>** keys. | Returns RDA to normal operation. |

## 4-3.5 OS/32 COMMAND FORMAT AND ERROR MESSAGES.

Table 4-30 contains all the OS/32 commands that an operator or maintenance technician would use. The commands are listed in alphabetical order. Each command is followed by a brief description of its general usage within the system. This is followed by detailed depiction of its format (abridged for use of the operator or maintenance technician) that shows its minimum abbreviation (underscored), optional parameters (bracketed), mandatory parameters (in braces) and defaults (in bold). For each command listed in Table 4-30 the possible error messages are listed. For further discussion of each listed error message refer to Table 4-31. Table 4-31 contains an alphabetical listing of operator command error/messages with a detailed explanation for each.

Table 4-30. OS/32 Command Format and Error Responses

**NOTE**

For a detailed explanation of the error messages in this table, refer to the alphabetic list of error messages in Table 4-31.

**ALLOCATE**

The **ALLOCATE** command is used to create a direct access file.

Command Format

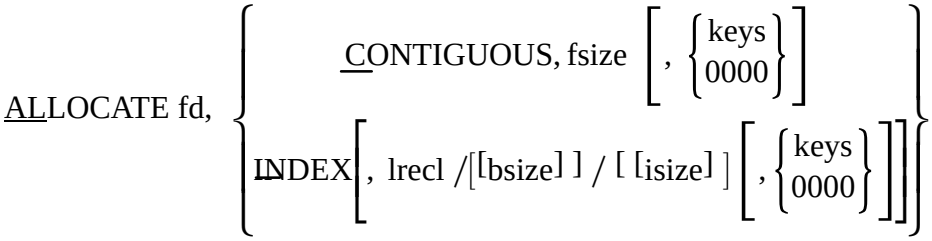


| Parameters | Description |
|---|---|
| fd | Is the file descriptor of the device or file to be allocated. |
| CONTIGUOUS | Specifies that the file type to be allocated is contiguous, all one continuous block of information. |
| fsize | Is a decimal number indicating file size. It is required for contiguous files. It specifies the total allocation size in 256-byte sectors. This size may be any value up to the number of contiguous free sectors existing on the specified volume at the time the command is entered. |
| keys | Specifies the write and read protection keys for the file. These keys are in the form of a hexadecimal halfword with the most significant byte signifying the write key and the least significant byte the read key. If this parameter is omitted, both keys default to Ø. |
| INDEX | Specifies that the file type to be allocated is indexed. Allows the software disk manager to fragment the file and store pieces of it in different places. |
| lrecl | Is a decimal number specifying the logical record length of an indexed or nonbuffered indexed file, or a data communications device. It cannot exceed 65,535 bytes. The default for indexed and nonbuffered indexed files is 126. It may optionally be followed by a slash (/) which delimits lrecl from bsize. |

Table 4-30. OS/32 Command Format and Error Responses (continued)

Error Messages

ALLO-ERR TYPE=NAME
ALLO-ERR TYPE=SIZE
ALLO-ERR TYPE=TYPE
ALLO-ERR TYPE=VOL
FD-ERR
NOPR-ERR
PARM-ERR

**ASSIGN**

The **ASSIGN** command gives an alias or label (in the form of a number) called a logical unit to a device, file, or data communication device so that a task can access or send data to that place. Logical units are assigned for specific tasks (another task can have a different logical unit for the place in question).

Command Format

ASSIGN lu,fd

| Parameters | Description |
|---|---|
| lu | Is a decimal number specifying the logical unit number to which a device or file is to be assigned. |
| fd | Is the file descriptor of the device or file to be assigned. |

Error Messages

ASGN-ERR
ASGN-ERR TYPE=BUFF
ASGN-ERR TYPE=LU
ASGN-ERR TYPE=NAME
ASGN-ERR TYPE=PRIV
ASGN-ERR TYPE=SIZE
ASGN-ERR TYPE=VOL
NOPR-ERR
FD-ERR
PARM-ERR
ASSN-ERR TYPE=SPAC
ASSN-ERR TYPE=TGD
PRIV-ERR
SEQ-ERR
SPAC-ERR
TASK-ERR

Table 4-30. OS/32 Command Format and Error Responses (continued)

**BIAS**

The **BIAS** command is used to set a bias address for the EXAMINE and MODIFY commands. A bias address is the course or rough address (a block of addresses) in RAM (shared memory).

Command Format

BIAS { address | * | * taskid }

| Parameters | Description |
|---|---|
| address | Is a hexadecimal bias to be added to the address given in any subsequent EXAMINE or MODIFY command. If address is omitted, all addresses specified in subsequent EXAMINE and MODIFY commands are treated as unbiased; they are assumed to be absolute physical addresses. |
| * | Specifies that the bias is set to be the physical address of the first location of the currently selected task. If the currently selected task is rollable, specification of * results in an error. A rollable task is one that allows the software memory manager to take it out of RAM, when there is not enough room to let another task enter shared memory. The software memory manager will subsequently roll the task back into memory at a later time. |
| *taskid | Specifies that the bias is set to be the physical address of the first location of taskid. If this task is rollable, specification of the BIAS *taskid results in an error. The currently selected task is not changed. |

Error Messages

ROLL-ERR
PARM-ERR
TASK-ERR
DELE-ERR TYPE=PRIV
DELE-ERR TYPE=PROT
DELE-ERR TYPE=TYPE
DELE-ERR TYPE=VOL

Table 4-30. OS/32 Command Format and Error Responses (continued)

**CANCEL**

The **CANCEL** command terminates the task and stops it from running. If the task is non-resident, issuing CANCEL will remove it from RAM. Non-resident specifies that the task is to be removed from memory at its completion. Non-resident is also a parameter of the OPTIONS command.

Command Format

CANCEL taskid

| Parameters | Description |
|---|---|
| taskid | The operand taskid is a 1- to 8-character alphanumeric string of characters in which the first character must be alphabetic, unless it is a system task. Taskid is a required parameter. |

Error Messages

PARM-ERR
SEQ-ERR
TASK-ERR

**CLOSE**

The **CLOSE** command unassigns (or closes) one or more files or devices to the currently selected tasks' logical units.

Command Format

CLOSE $\left\{ lu_1 \left[ \begin{matrix} , lu_2, ..., lu_n \\ \mathbf{ALL} \end{matrix} \right] \right\}$

| Parameters | Description |
|---|---|
| ALL | Specifies that all logical units of the currently selected task are to be closed. |

Error Messages

PARM-ERR
SEQ-ERR
TASK-ERR
CLOS-ERR TYPE=LU
CLOS-ERR TYPE=BUF

Table 4-30. OS/32 Command Format and Error Responses (continued)

**CONTINUE**

The **CONTINUE** command causes a task that executed a PAUSE, or that was paused by the operator, to resume operation on the task's logical processor. The logical processor is the CPU execution time for the task in question.

Command Format

CONTINUE [address]

| Parameters | Description |
|---|---|
| address | Is a hexadecimal number that specifies where the task is to resume operation. If this parameter is not specified, the task resumes at the next sequential instruction following the pause. |

Error Messages

PARM-ERR
SEQ-ERR
TASK-ERR

**DELETE**

The **DELETE** command deletes direct access files, providing its protection keys have not been set by the REPROTECT command.

Command Format

DELETE fd1[,fd2,...,fd3]

| Parameters | Description |
|---|---|
| fd | Identifies the file to be deleted. |

Error Messages

NOPR-ERR
FD-ERR
PRIV-ERR
DELE-ERR TYPE=ASGN
DELE-ERR TYPE=BUFF
FD-ERR/PARM-ERR
SPAC-ERR
NO ACTIVE TASK(S) FOUND
NOAC-ERR
IO-ERR
FORM-ERR

Table 4-30. OS/32 Command Format and Error Responses (continued)

**DISPLAY ACCOUNTING**

The **DISPLAY ACCOUNTING** command displays to the specified fd all accounting information for the specified task. The accounting information shows hardware usage allocated to that task in terms of time.

Command Format

DISPLAY ACCOUNTING $\left[,\left\{\begin{matrix}\text{taskid}\\ \textbf{all tasks}\end{matrix}\right\}\right]\left[,\left\{\begin{matrix}\text{fd}\\ \textbf{system console}\end{matrix}\right\}\right]$

| Parameters | Description |
|---|---|
| taskid | Is the task name for which accounting information is to be displayed. If this parameter is omitted, accounting information is logged for all tasks. |
| fd | Is the device or file to which accounting information is displayed. If this parameter is omitted, the accounting information is displayed at the System Console. |

Error Messages

ASGN-ERR TYPE=BUFF/
ASGN-ERR TYPE=LU/
ASGN-ERR TYPE=NAME/
ASGN-ERR TYPE=NAME/
ASGN-ERR TYPE=PRIV/
ASGN-ERR TYPE=SPAC
ASGN-ERR TYPE=VOL
ASGN-ERR TYPE=SIZE

**DISPLAY DEVICES**

The **DISPLAY DEVICES** command allows the operator to determine the physical address, keys, on-line/off-line state and volume name (for on-line direct access devices) of all devices in the system. This command also determines the state of error recording for those devices supporting the error recording function.

Command Format

DISPLAY DEVICES $\left[\left[,\left\{\begin{matrix}\text{fd}\\ \textbf{system console}\end{matrix}\right\}\right][,\text{DCB}]\right]$

| Parameters | Description |
|---|---|
| fd | Is the file descriptor specifying the file or device to which the display is routed. If fd is omitted, the display is output to the system console. |
| DCB | Is used to display the Device Control Block address (the bias address) of each device. |

Table 4-30. OS/32 Command Format and Error Responses (continued)

Error Messages

ASGN-ERR
FD-ERR
IO-ERR
FORM-ERR
PARM-ERR

**DISPLAY ERRORS**

The **DISPLAY ERRORS** command displays to the user-specified fd a list of errors that the hardware error logger has detected and the following additional error recording status:

- Status of the error recording function (on or off)
- Date when error recording was turned on (month, day, year)
- Time (hour, minutes, seconds)
- Setting of the error log read-out time period (minutes)

Command Format

DISPLAY ERRORS [ , { fd / **system console** } ]

| Parameters | Description |
|---|---|
| fd | Is an optional file descriptor specifying the file or device that receives the summary of the hardware logged errors. If fd is omitted, the summary is displayed to the system console. |

Error Messages

ASGN-ERR
FD-ERR
FORM-ERR
IO-ERR
PARM-ERR

**DISPLAY FILES**

The **DISPLAY FILES** command permits information from the directory of one or more direct access files to be output to the system console or, optionally, to a named file or device.

Command Format

DISPLAY FILES [ / [ { voln : / **default sys vol** } ] [ { filename / * / – } ] [ [ { ext / – } ] ] [ / { acctno / – / **O** / **S** } ] [ , { fd / **sys console** } ] ]

Table 4-30. OS/32 Command Format and Error Responses (continued)

| Parameters | Description |
|---|---|
| voln: | Name of a disk volume. If voln is omitted, the default system volume is assumed. |
| : | Specifies that all files on the system account be displayed regardless of the volume on which they reside. |
| acctno | The account number field may be omitted, in which case system files (account Ø) are displayed. |
| fd | Is an optional file descriptor specifying the file or the device to which the display is output. If fd is omitted, the display is output to the system console. |
| filename | Is a 1- to 8- character name of a file. The first character must be alphabetic and the remaining alphanumeric. |
| ext | Is a 1- to 3- character extension to the filename |

Error Messages

FILE(S) NOT FOUND ON voln
NO DIRECTORY ENTRIES ON voln
ASSN-ERR
FD-ERR
FORM-ERR
IO-ERR
PARM-ERR

**DISPLAY LOG**

The **DISPLAY LOG** command displays, to the specified fd, the name of the system log set by the operator's SET LOG command.

Command Format

DISPLAY LOG [ , { fd / **system console** } ]

| Parameters | Description |
|---|---|
| fd | Is an optional file descriptor of the file or device to which the name of the system log is displayed. If fd is omitted, the display is output to the system console. |

Error Messages

NO SYSTEM LOG ASSIGNED
ASGN-ERR
FD-ERR
PARM-ERR

Table 4-30. OS/32 Command Format and Error Responses (continued)

**DISPLAY LU**

The **DISPLAY LU** command permits the operator to display all assigned logical units of the currently selected task. The selected task is the one active at the system console. The TASK command can be used to select a task.

Command Format

DISPLAY LU [, { fd / **system console** }]

| Parameters | Description |
|---|---|
| fd | Is a logical file descriptor specifying the file or device on which the assigned logical units are to be displayed. If fd is omitted, the display is output to the system console. |

Error Messages

ASGN-ERR
FD-ERR
FORM-ERR
IO-ERR
PARM-ERR
TASK-ERR

**DISPLAY MAP**

The **DISPLAY MAP** command causes a memory map to be output to the console or to a specified file or device. The display map can be of the entire RAM memory or of a particular task in memory, pure, library or task common segment, system space, pseudotask, or marked off memory.

Command Format

DISPLAY MAP [/{ id / .TSK / .PUR / .SEG / .SYS / .OFF / .PST / .RAM / ALL }] [/rname] [, { fd / sys console }]

Table 4-30. OS/32 Command Format and Error Responses (continued)

| Parameters | Description |
|---|---|
| id | Can be either .BG to refer to the background task or the name associated with a task. |
| TSK | Requests display of task segments. |
| PUR | Requests display of PUR segments. |
| SEG | Requests display of library and task common segments. |
| SYS | Requests display of dynamic system space. |
| OFF | Requests display of all OFF memory segments. |
| PST | Requests display of pseudotasks created by a system task using the intercept feature. |
| RAM | Requests display of RAM disks. |
| fd | Is the file descriptor specifying the file or device on which the map is to be output. If fd is omitted, the display is output to the system console. |

Error Messages

SEGMENT REQUEST NOT FOUND
ASGN-ERR
FD-ERR
FORM-ERR
IO-ERR
PARM-ERR

**DISPLAY STATUS**

The **DISPLAY STATUS** command displays to the specified fd the status of assignments to the specific disk volume, for the volume name or for the bare device.

Command Format

DISPLAY STATUS ,voln $\left[ , \left\{ \begin{matrix} \text{fd} \\ \textbf{sys console} \end{matrix} \right\} \right]$

| Parameters | Description |
|---|---|
| voln | Volume name of the disk for which the status is displayed. If a colon (:) is appended, the mnemonic is assumed to be a device; otherwise, it is a volume id. |
| fd | Is an optional file descriptor specifying the file or device to which the specified disk volume's status is displayed. If fd is omitted, the display is output to the system console. |

Table 4-30. OS/32 Command Format and Error Responses (continued)

Error Messages

DEVICE NOT A DISK
ASGN-ERR
FD-ERR
FORM-ERR
PARM-ERR
NOPR-ERR

**DISPLAY TASKS**

The **DISPLAY TASKS** command outputs status information for all tasks in the system or for a single specified task.

Command Format

DISPLAY TASKS [task-id] [ , { fd / **sys console** } ]

| Parameters | Description |
|---|---|
| task-id | Specifies the task for which status information is to be displayed. If this parameter is omitted, status information for all tasks in the system is displayed. |
| fd | Specifies the destination for the output generated by this command. The destination may be a file with account number Ø or another character handling device. If fd is omitted, the output is directed to the system console. |

Error Messages

| | |
|---|---|
| ASGN-ERR | PARM-ERR |
| FD-ERR | IO-ERR |
| FORM-ERR | TASK(S) NOT FOUND |

**DISPLAY TIME**

The **DISPLAY TIME** command causes the current date and time to be output to the system console, or to a specified file or device.

Command Format

DISPLAY TIME [ , { fd / **sys console** } ]

| Parameters | Description |
|---|---|
| fd | Specifies the file or device to which the display is to be output. If fd is omitted, the display is output to the system console. |

Table 4-30. OS/32 Command Format and Error Responses (continued)

Error Messages

ASGN-ERR
FD-ERR
IO-ERR
PARM-ERR

**DISPLAY VOLUME**

The **DISPLAY VOLUME** command displays to the specified fd the state of the specified disk volume. The 'state' is the amount of files, percent of space used to hold those files, and percent of free space on the volume (the largest extent of the volume space used, beginning to end, including any free space in the middle). This command is supported only on disk devices that support error recording.

Command Format

DISPLAY VOLUME ,voln [ , { fd / **system console** } ]

| Parameters | Description |
|---|---|
| voln | Is the volume name of the disk for which status is displayed. |
| fd | Is an optional file descriptor specifying the file or device to which the specified disk volume's status is displayed. If fd is omitted, the display is output to the system console. |

Error Messages

ASGN-ERR
DEVICE NOT A DISK
FD-ERR
FORM-ERR
IO-ERR
NODA-ERR
NOPR-ERR
PARM-ERR

**ERROR LOG**

The **ERROR LOG** command turns on or off the error recording function which copies the errors from the error logger to the disk. This command controls general error and memory error recording for all 3200 Processors.

Command Format

ERROR LOG [ , { ON [, [fd] [, INIT]] / OFF } ]

Table 4-30. OS/32 Command Format and Error Responses (continued)

| Parameters | Description |
|---|---|
| OFF | Dumps the internal error record buffer to disk and closes the error recording files. Internally, since errors are still stored but not written to disk, error data is lost, if the internal buffer overflows. |
| ON | Turns on the error recording function. |
| fd | Specifies the contiguous file to be used for error recording. If this parameter is omitted, the file specified at sysgen is the default. If the user-specified fd does not currently exist, the file is automatically allocated and assigned. |
| INIT | Initializes the error recording file so that new error records can be added to the beginning of the file. If this parameter is omitted, subsequent error records are added following the last records written to the file. |

Error Messages

CLOS-ERR TYPE=BUFF
DATE-ERR
NOPR-ERR
OFF-ERR
ON-ERR
PARM-ERR

**ERROR PERIOD**

The **ERROR PERIOD** command sets the memory error log readout period to a user-specified number of minutes. The initial value is specified at sysgen time. This command can be used only with Series 3200 Processors.

Command Format

ERROR PERIOD [ , { minutes / * } ]

| Parameters | Description |
|---|---|
| minutes | Is a decimal number from 1 to 1440 specifying the number of minutes between error log read-outs. If this parameter is omitted, the time period is reset to the initial sysgen value. |
| * | Specifies that the memory error logger performs a readout immediately. The previously set readout period is not affected. |

Table 4-30. OS/32 Command Format and Error Responses (continued)

Error Messages

INIT-ERR
NOPR-ERR
PARM-ERR
PERD-ERR
SPAC-ERR

**EXAMINE**

The **EXAMINE** command is used to examine the contents of local or shared memory.

Command Format

EXAMINE address$_1$ $\left[\left\{\begin{array}{c}\text{,n}\\ \text{/address}_2\\ \text{,1}\end{array}\right\}\right]$ $\left[\text{,}\left\{\begin{array}{c}\text{fd}\\ \textbf{sys console}\end{array}\right\}\right]$

| Parameters | Description |
|---|---|
| address | Indicates the starting and ending addresses in memory whose contents are to be displayed in hexadecimal. All addresses specified are rounded down to halfword boundaries by the operating system. |
| n | Is a decimal number specifying the number of halfwords to be displayed. If n is omitted, one halfword is displayed. |
| fd | Is the file descriptor specifying the file or device to which the contents of memory are displayed; if omitted, the display is output to the system console. |

Error Messages

| | |
|---|---|
| ASGN-ERR | IO-ERR |
| FD-ERR | NOPR-ERR |
| FORM-ERR | PARM-ERR |

**FFILE**

The **FFILE** command forward spaces to the next filemark on magnetic tapes, cassettes, and direct access files.

Command Format

| | |
|---|---|
| FFILE fd | Used for magnetic tapes and cassettes only. |
| FFILE fd,[lu] | Used for disk devices only. |

| Parameters | Description |
|---|---|
| fd | Is the file descriptor of the device or file that is to be forward-spaced one filemark. |
| lu | Is the logical unit to which the file is assigned. |

Table 4-30. OS/32 Command Format and Error Responses (continued)

Error Messages

FD-ERR
IO-ERR
LU-ERR
NOBC-ERR
NOPR-ERR
TASK-ERR
ASGN-ERR
ASGN-ERR TYPE=BUFF
ASGN-ERR TYPE=LU
ASGN-ERR TYPE=NAME
ASGN-ERR TYPE=PRIV
ASGN-ERR TYPE=PROT
ASGN-ERR TYPE=SIZE
ASGN-ERR TYPE=SPAC
ASGN-ERR TYPE=TGD
ASGN-ERR TYPE=VOL

**FRECORD**

The **FRECORD** command forward spaces one record on magnetic tapes, cassettes, and direct access files.

Command Format

| | |
|---|---|
| FRECORD fd | Used for magnetic tapes and cassettes only. |
| FRECORD[fd,]lu | Used for disk devices only. |

| Parameters | Description |
|---|---|
| fd | Is the file descriptor of the device or file to be forward-spaced one record. |
| lu | Is the logical unit to which the device or file is assigned. |

Table 4-30. OS/32 Command Format and Error Responses (continued)

Error Messages

FD-ERR
IO-ERR
LU-ERR
NOBC-ERR
NOPR-ERR
TASK-ERR
ASGN-ERR TYPE=BUFF
ASGN-ERR TYPE=LU
ASGN-ERR TYPE=NAME
ASGN-ERR TYPE=PRIV
ASGN-ERR TYPE=PROT
ASGN-ERR TYPE=SIZE
ASGN-ERR TYPE=SPAC
ASGN-ERR
ASGN-ERR TYPE=TGD
ASGN-ERR TYPE=VOL

**LOAD**

The **LOAD** command loads background tasks, foreground tasks, system tasks, task common segments, and library segments into memory. If this command is entered at the system console (not via a CSS), the system automatically tasks to the program just loaded.

Command Format

LOAD { fd [, segsize increment] | taskid [, [fd] [, segsize increment]] | sysid, fd [, segsize increment] | .BG, fd[, segsize increment] }

Table 4-30. OS/32 Command Format and Error Responses (continued)

| Parameters | Description |
|---|---|
| taskid | Specifies the name of the task after it is loaded into the foreground segment in memory. The default extension for fd is .TSK. |
| sysid | Specifies the taskid of a system task. The taskid for the Spooler is .SPL; the taskid for the multi-terminal monitor is .MTM. |
| BG | Specifies that a background task is to be loaded into memory with intertask communication control and capabilities disabled. |
| fd | Is the filename used as the taskid or the fd of the established task, library, or preinitialized task common segment to be loaded into memory. If this parameter is omitted, the default is taskid.TSK for foreground tasks. This parameter is required for system tasks, background tasks and task common, and library segments. However, if the extension of the fd is omitted, the default extension is fd.SEG for task common and library segments, and fd.TSK for foreground and background tasks. |
| segsize increment | Is a decimal number (in kilobytes) specifying the amount of get storage area in the task's impure memory segment. If specified, this value overrides the OPTION WORK= values used when the task was linked. |

Error Messages

FD-ERR
FORM-ERR
NOPR-ERR
PARM-ERR
LOAD-ERR TYPE=IO
LOAD-ERR TYPE=LIB
LOAD-ERR TYPE=MTCB
LOAD-ERR TYPE=LOPT
LOAD-ERR TYPE=MAP
LOAD-ERR TYPE=MEM
LOAD-ERR TYPE=NAME
LOAD-ERR TYPE=NOFP
LOAD-ERR TYPE=ODT
LOAD-ERR TYPE=OPT
LOAD-ERR TYPE=PRES
LOAD-ERR TYPE=PURE
LOAD-ERR TYPE=REL
LOAD-ERR TYPE=ROIO
LOAD-ERR TYPE=RVOL
LOAD-ERR TYPE=SEG
LOAD-ERR TYPE=SPAC
LOAD-ERR TYPE=SYS

Table 4-30. OS/32 Command Format and Error Responses (continued)

Error Messages (continued)

LOAD-ERR TYPE=TKID
LOAD-ERR TYPE=USE

**MARK**

The **MARK** command takes a device off-line or brings on-line a device that was previously off-line. For directory devices, the size of a volume's secondary directory and the expansion size can also be specified with the MARK command.

Command Format

MARK $dev_1$:, { OFF [, only] / ON [, PROTECTED] / [, CDIRECTORY = [ALL]] }

| Parameters | Description |
|---|---|
| $dev_1$ | Is the device mnemonic. |
| OFF | Marks a device off-line. |
| ONLY | Marks off one of a pair of mirrored disks. |
| ON | Marks a device on-line. |
| PROTECTED | Marks a device write-protected. |
| CDIRECTORY=ALL | Specifies that the disk is to be marked on-line with a secondary directory large enough to maintain all directory slots in memory (i.e., bsize=SLOTS1; exp=Ø and PAGES2=1.) If enough memory space is available, it is suggested that the ALL parameter be used. |

Error Messages

| | |
|---|---|
| BPAC-ERR | PARM-ERR |
| DEV-ERR | READ-ERR |
| DUPL-ERR | STAT-ERR |
| FORM-ERR | WRIT-ERR |
| NOFF-ERR | I/O ERROR MARKING OFF DISK; PLEASE CHECK |

- - - - -

1 SLOTS is the number of directory slots on the disk (i.e., the total number of active files and the current number of three directory slots currently on the disk).

2 PAGES is the number of pages of secondary directory pages in SYSTEM.DIR is maintained in the in-memory buffer at a time

Table 4-30. OS/32 Command Format and Error Responses (continued)

**OPTIONS**

The **OPTIONS** command is used to specify or change certain options of the currently selected task. An OPTIONS command can be entered if the referenced task is dormant or paused.

Command Format

OPTIONS [,{RESIDENT / **NONRESIDENT**}]

| Parameters | Description |
|---|---|
| RESIDENT | Specifies that the task is memory resident. |
| NONRESIDENT | Specifies that the task is to be removed from memory at end of task. |

Error Messages

FORM-ERR
NROL-ERR
OPT-ERR
PARM-ERR
SEQ-ERR
TASK-ERR

**PAUSE**

The **PAUSE** command causes the currently selected task to pause.

Command Format

PAUSE

Error Messages

FORM-ERR
SEQ-ERR
TASK-ERR

**RENAME**

The **RENAME** command is used to change the name of an unassigned direct access file or device.

Command Format

RENAME oldfd,newfd

| Parameters | Description |
|---|---|
| oldfd | Is the current file descriptor of the file or device to be renamed. |
| newfd | Is the new file descriptor to which the file or device is renamed. |

Table 4-30. OS/32 Command Format and Error Responses (continued)

Error Messages

ASGN-ERR TYPE=PRIV
POS=REN
ASGN-ERR TYPE=PROT
POS=fd
FD-ERR
FORM-ERR
NOPR-ERR
NULL-ERR
PARM-ERR
RENM-ERR TYPE=BUFF
POS=fd
RENM-ERR TYPE=NAME
POS=REN
RENM-ERR TYPE=NAME
POS=fd

**REPROTECT**

The **REPROTECT** command permits the operator to modify the protection keys of an unassigned direct access file or device.

Command Format

REPROTECT fd,new keys

| Parameters | Description |
|---|---|
| fd | Is the file descriptor of the file or device to be reprotected. |
| new keys | Is a hexadecimal halfword whose most significant byte signifies the new write keys and whose least significant byte signifies the new read key. |

Error Messages

FORM-ERR
PARM-ERR
PRIV-ERR
FD-ERR
ASGN-ERR
ASGN-ERR TYPE=BUFF
ASGN-ERR TYPE=LU
ASGN-ERR TYPE=NAME
ASGN-ERR TYPE=PRIV
ASGN-ERR TYPE=PROT
ASGN-ERR TYPE=SIZE

Table 4-30. OS/32 Command Format and Error Responses (continued)

Error Messages (continued)

ASGN-ERR TYPE=SPAC
ASGN-ERR TYPE=TGT
ASGN-ERR TYPE=VOL
ASGN-ERR TYPE=ASGN

**SEND**

The **SEND** command is used to send a message to the currently selected task.

Command Format

SEND message [;]

| Parameters | Description |
|---|---|
| message | Is a variable length string of 1 to 64 alphanumeric characters. |

Error Messages

ARGS-ERR
NOPR-ERR
SEQ-ERR
SVC6-ERR
TASK-ERR

**SET LOG**

The **SET LOG** command is used to specify the system log device. The system log device receives all system console I/O. This includes:

- all command lines entered from the console or from the CSS,
- all responses to these commands (other than prompts), and
- all messages logged by tasks

Command Format

SET LOG fd $\left[,\left\{\begin{matrix}\text{COPY}\\ \textbf{NOCOPY}\end{matrix}\right\}\right]\left[,\left\{\begin{matrix}\text{n}\\ \textbf{15}\end{matrix}\right\}\right]$

Table 4-30. OS/32 Command Format and Error Responses (continued)

| Parameters | Description |
|---|---|
| fd | Is the file descriptor of the log device. If fd is not specified, logging is terminated. |
| COPY | Specifies that a copy of all system console I/O is to be sent to the system console device, as well as to the log device. |
| NOCOPY | Specifies that the system console is not to receive a copy of the I/O. If COPY is not specified, the system defaults to NOCOPY. |
| n | Is a decimal number from 0 to 65,535 specifying the number of lines after which the system log file is to be checkpointed. If this parameter is omitted, the default is 15 lines. |

Error Messages

ASGN-ERR
FD-ERR
IO-ERR
PARM-ERR

**SET TIME**

The **SET TIME** command sets the current date and time of day.

Command Format

SET TIME { [mm/dd/yy], hh : mm : ss | OFF | 0 | ON }

| Parameters | Description |
|---|---|
| mm | Is a decimal number from Ø1 to 12 specifying the month. |
| dd | Is a decimal number from Ø1 to 31 specifying the day. |
| yy | Is a decimal number from ØØ to 99 specifying the year. |
| hh | Is a decimal number from ØØ to 23 specifying the hour. |
| mm | Is a decimal number from ØØ to 59 specifying the minutes. |
| ss | Is a decimal number from ØØ to 59 specifying the seconds. |
| OFF | Turns off the clock for system debugging. |
| Ø | Turns off the clock for system debugging. |
| ON | Is a parameter valid only with the M3200 System. If ON is specified, the current date and time of day maintained by the Control Diagnostic System (CDS) is used to set the operating system date and time of day |

Table 4-30. OS/32 Command Format and Error Responses (continued)

Error Messages

FORM-ERR
NOPR-ERR
PARM-ERR

**START**

The **START** command is used to initiate task execution. The currently selected task is started only if it is dormant; otherwise, the command is rejected.

Command Format

START [ { address / **transfer address** } ] [, parameter$_1$, ..., parameter$_n$]

| Parameters | Description |
|---|---|
| address | Specifies the address at which task execution is to begin. For u-tasks, this is not a physical address, but is an address within the task's own logical address space. If address is omitted, the currently selected task is started at the transfer address specified when the task was established. |
| parameter | Specifies optional parameters to be passed to the task for its own decoding and processing. Parameters must be separated by a comma. If there is not enough memory to pass all the characters, the call is rejected with an ARGS-ERR. |

Error Messages

FORM-ERR
PARM-ERR
SEQ-ERR
SVC6-ERR TYPE=ARGS
SVC6-ERR TYPE=DORM
TASK-ERR

**TASK**

The **TASK** command is used to specify the current foreground, background, or system tasks.

Command Format

TASK [ { taskid / .BGround } ]

| Parameters | Description |
|---|---|
| taskid | Is the name of a foreground task, background task (.BG), or system task (.MTM or .SPL). If taskid is not specified, the taskid of the currently selected task is displayed on the console device. |

Table 4-30. OS/32 Command Format and Error Responses (continued)

Error Messages

PARM-ERR
TASK-ERR

**VOLUME**

The **VOLUME** command is used to set or change the name of the system, task, roll, spool, or temporary volume. Alternatively, it is used to interrogate the system for the current names associated with these volumes.

Command Format

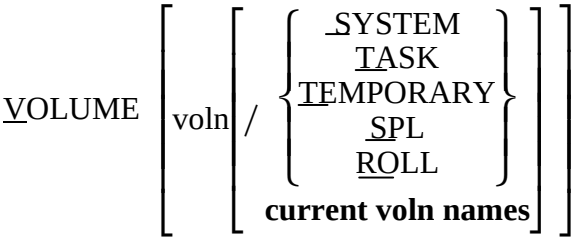


| Parameters | Description |
|---|---|
| voln | Is a 4-character volume identifier. If all parameters are omitted, all current system, task, roll, spool, and temporary volume names are displayed. |
| SYSTEM | Specifies the system volume which is the default value. |
| TASK | Specifies the task volume of the currently selected task. |
| TEMPORARY | Specifies the temporary volume. |
| SPL | Specifies the spool volume. |
| ROLL | Specifies the roll volume. |

Error Messages

PARM-ERR
TASK-ERR

**WFILE**

The **WFILE** command writes a filemark on magnetic tapes, cassettes, and direct access files. A filemark indicates the end of one file and the beginning of the next file.

Command Format

| | |
|---|---|
| WFILE fd | Used for magnetic tapes and cassettes only. |
| WFILE[fd,]lu | Used for disk devices only. |

| Parameters | Description |
|---|---|
| fd | Is the file descriptor of the file or device to which a filemark is to be written. |
| lu | Is the logical unit to which the device or file is assigned. |

Table 4-30. OS/32 Command Format and Error Responses (continued)

Error Messages

FD-ERR
FORM-ERR
I/O-ERR
LU-ERR
NOPR-ERR
PARM-ERR
TASK-ERR
ASGN-ERR
ASGN-ERR TYPE=BUFF
ASGN-ERR TYPE=LU
ASGN-ERR TYPE=NAME
ASGN-ERR TYPE=PRIV
ASGN-ERR TYPE=PROT
ASGN-ERR TYPE=SIZE
ASGN-ERR TYPE=SPAC
ASGN-ERR TYPE=TGT
ASGN-ERR TYPE=VOL

**XALLOCATE**

The **XALLOCATE** command deletes an existing file and allocates a file with the same name.

Command Format

XALLOCATE fd, CONTIGUOUS, fsize [, {keys / 0000}]
EC [/[{bsize / 64}]] [, {keys / 0000}]
INDEX [, [{lrecl / 126}] [/[bsize]] [, {keys / 0000}]]

Table 4-30. OS/32 Command Format and Error Responses (continued)

| Parameters | Description |
|---|---|
| fd | Is the file to be deleted and the name of the new file to be allocated. |
| CONTIGUOUS | Specifies that the file type to be allocated is contiguous |
| fsize | Is a decimal number indicating file size. It is required for contiguous files. It specifies the total allocation size in 256-byte sectors. This size may be any value up to the number of contiguous free sectors existing on the specified volume at the time the command is entered. |
| keys | Specify that the write and read protection keys for the file. These keys are in the form of a hexadecimal halfword with the most significant byte signifying the write key and the least significant byte the read key. If this parameter is omitted, both keys default to Ø. |
| EC | Specifies that the file type to be allocated is extendable contiguous. |
| bsize | Is a decimal number specifying the physical block size to be used for buffering and debuffering, debuffing operations on the index file or data communications device, for the data blocks used for indexed, nonbuffered indexed and extendable contiguous files. When INDEX, EC or NB is specified, bsize represents the block size in sectors of the physical data blocks containing the file. When ITAM is specified, bsize represents the buffer size in bytes. For INDEX files and ITAM buffers, if this parameter exceeds the maximum block size established during sysgen or by the operator, the maximum is used. For EC and NB files, this parameters can be any value between 1 and 255, inclusive. If bsize is omitted, the default established at sysgen or by the operator is used for INDEX and NB files. For EC and LR files, the default is 64 sectors. |
| INDEX | Specifies that the file type to be allocated is buffered indexed. |
| lrecl | Is a decimal number specifying the logical record length on an indexed or nonbuffered indexed file, or a data communications device. It cannot exceed 65,535 bytes. Its default is 126 bytes. It may optionally be followed by a slash (/), which delimits lrecl from bsize. |

Error Messages

ALLO-ERR TYPE=NAME
ALLO-ERR TYPE=SIZE
ALLO-ERR TYPE=TYPE
ALLO-ERR TYPE=VOL
DELE-ERR
FD-ERR
NOPR-ERR
PARM-ERR

Table 4-30. OS/32 Command Format and Error Responses (continued)

**XDELETE**

The **XDELETE** command is used to delete one or more files. If the file does not exist, no error is generated.

Command Format

XDELETE $fd_1$ [ ,$fd_2$,...,$fd_n$]

| Parameters | Description |
|---|---|
| fd | Is the file description to be deleted. |

Error Messages

DELE-ERR TYPE=ASGN
DELE-ERR TYPE=BUFF
DELE-ERR TYPE=NAME
DELE-ERR TYPE=PRIV
DELE-ERR TYPE=PROT
DELE-ERR TYPE=TYPE
DELE-ERR TYPE=VOL
FD-ERR
NOPR-ERR

Table 4-31. OS/32 Operator Command Error Messages

| Error Message | Indication |
|---|---|
| ALLO-ERR TYPE=NAME | Indicates desired filename currently exists on the specified volume. |
| ALLO-ERR TYPE=SIZE | Indicates that not enough room is on the disk to allocate the file. The block size of indexed file exceeds the limit established at sysgen. For an indexed file, a zero logical record length or block size was specified. |
| ALLO-ERR TYPE=TYPE | Indicates the volume specified is not a direct access device. Ensure that the specified volume is the disk volume name, not its device name. |
| ALLO-ERR TYPE=VOL | Indicates that the volume name specified or the default volume is not the name of any disk currently on-line. Ensure that the desired disk is on-line. |
| ASGN-ERR | Indicates the optional file descriptor (fd) or disk device of voln could not be assigned; e.g., fd or disk is assigned for exclusive use only. |
| ASGN-ERR TYPE=BUFF | Indicates an attempt was made to assign a file when there was insufficient system space available to accommodate the file control block (FCB). Close any currently assigned files that are no longer required, or increase the size of system space with a SET SYS command. |
| ASGN-ERR TYPE=LU | Indicates an attempt was made to assign a logical unit (lu) that is greater than the maxlu number specified at Link time. |
| ASGN-ERR TYPE=NAME | Indicates an assignment was directed to a nonexistent file. |
| ASGN-ERR TYPE=PRIV | Indicates a file that is currently assigned to an lu with a given privilege could not be assigned to another lu because the access privileges were in conflict. Request a compatible access privilege on second assignment or change the access privileges currently associated with the file. |
| ASGN-ERR TYPE=PROT | Indicates the file assigned is unconditionally protected or the read/write keys specified in the assign statement do not correspond to those associated with the file. |
| ASGN-ERR TYPE=SIZE | Indicates an indexed file was assigned and there is not enough room on the disk to allocate a physical block. Ensure sufficient space on the disk by deleting old file or reducing the block size of the file. Alternatively, compress the disk using the Backup Utility. |
| ASGN-ERR TYPE-SPAC | Indicates an attempt was made to assign a file that required buffer space exceeding the task maximum system space allotment. |

Table 4-31. OS/32 Operator Command Error Messages (continued)

| Error Message | Indication |
|---|---|
| ASGN-ERR TYPE=TGD | Indicates an attempt was made to assign a trap-generating device that does not support such assignment. |
| ASGN-ERR TYPE=VOL | Indicates the volume name specified or default volume is not the name of any disk currently on-line. |
| BPAC-ERR | Indicates the disk was not ready or was not readable. If the disk is ready and is not write-protected, reinitialize using the FASTCHEK Utility. |
| CLOS-ERR TYPE=LU | Indicates the lu number is greater than maxlu specified at Link time. |
| CLOS-ERR TYPE=BUFF | Indicates system space has become corrupted and buffers and/or FCBs cannot be returned to the free system space. |
| DATE-ERR | Indicates an ERROR LOG command was entered with the ON parameter specified, but the date and time parameters on the SET TIME command were not specified. |
| DELE-ERR | Indicates an error occurred while trying to delete a file. |
| DELE-ERR TYPE=ASGN | Indicates an attempt was made to delete a file that is currently assigned. |
| DELE-ERR TYPE=PRIV | Indicates the file is currently assigned to a task. |
| DELE-ERR TYPE=PROT | Indicates the read/write protection keys are not Ø. |
| DELE-ERR TYPE=TYPE | Indicates the volume name specified or default volume is not a direct access device. |
| DELE-ERR TYPE VOL | Indicates the specified volume is not mounted, the volume was not marked on, or the incorrect volume name was given. |
| DEV-ERR | Indicates an attempt was made to mark a nonexistent or a pseudodevice on or off, or an attempt was made to modify the attributes of a nonexistent device or bulk storage device. |
| DEVICE NOT A DISK | Indicates the specified device with voln is not a bulk device. |
| DUPL-ERR | Indicates when marking a direct access device on, the volume name associated with the device was an existing device or volume name. Run the FASTCHEK Utility to change the disk volume name or mark the other disk off-line. |
| FD-ERR | Indicates the fd was syntactically incorrect, or a program on the disk was being loaded without enough system space for the load operation. |
| FILE NOT FOUND | Indicates the specified file was not found. |
| FORM-ERR | Indicates the command format was syntactically incorrect. |

Table 4-31. OS/32 Operator Command Error Messages (continued)

| Error Message | Indication |
|---|---|
| I/O-ERR | Indicates a device accessed by the command processor returned a nonzero I/O status. The following type fields can be displayed: |
| TYPE=PRTY | Parity or other recoverable error occurred. Retry the operation with another unit, if possible. |
| TYPE=UNRV | An unrecoverable error occurred. |
| TYPE=EOF,EOM | The device reached EOF or EOM before completing the operation. |
| TYPE=DU | The device is unavailable. Ensure that the device is on-line and ready. |
| TYPE=FUNC | An invalid operation is being directed toward a device; e.g., attempting to write to a read-only device. |
| TYPE=LU | The lu is illegal or unassigned. Close and reassign a proper lu. |
| INIT-ERR | Indicates memory error recording was initialized, but it had already been specified and was in progress. |
| LOAD-ERR TYPE=IO | Indicates an I/O error was generated during the load operation. Retry the load operation. If the same condition results, verify the status of the medium from which the task is being loaded. |
| LOAD-ERR TYPE=LIB | Indicates the data in the loader information block (LIB) was invalid. This error most frequently occurs when an attempt is made to load a task that was not established with Link. |
| LOAD-ERR TYPE=LOPT | Indicates a conflict between the load options requested and those specified at Link time. |
| LOAD-ERR TYPE=MAP | Indicates while loading a task, an attempt was made to automatically load a sharable segment, but fd could not be found or the shared segment table overflowed. |
| LOAD-ERR TYPE=MEM | Indicates a load was attempted when no memory area large enough was available. Change priorities or rollability of current tasks to allow a roll operation to occur or cancel one or more current tasks. |
| LOAD-ERR TYPE=MTCB | Indicates an attempt was made to load more tasks than the system permits. |
| LOAD-ERR TYPE=NAME | Indicates the fd was not found or cannot be assigned. |
| LOAD-ERR TYPE=NOFP | Indicates an attempt was made to load a task requiring floating point support and the required floating point option is not supported in the system. |
| LOAD-ERR TYPE=ODT | Indicates data in the overlay descriptor table (ODT) of a tree structure overlay is invalid. |

Table 4-31. OS/32 Operator Command Error Messages (continued)

| Error Message | Indication |
|---|---|
| LOAD-ERR TYPE=OPT | Indicates the task was not established as a system task. |
| LOAD-ERR TYPE=PRES | Indicates the specified taskid is already present in the system. |
| LOAD-ERR TYPE=PURE | Indicates a duplicate pure segment name. |
| LOAD-ERR TYPE=REL | Indicates the relocation table within a relocatable e-task was invalid. An address in the relocation table was either on an odd-byte boundary or was pointing outside the program's task space. |
| LOAD-ERR TYPE=ROIO | Indicates an I/O error was encountered in writing a roll file. Retry the load operation. If the same error occurs, verify the status of the roll volume. |
| LOAD-ERR TYPE=RVOL | Indicates an allocation or assignment error is on the roll file. Ensure that the roll volume is on-line and write enabled. Retry the load operation. |
| LOAD-ERR TYPE=SEG | Indicates an attempt was made to load a task requiring the run-time library (RTL) or a TCOM prior to establishing an RTL or TCOM segment. |
| LOAD-ERR TYPE=SPAC | Indicates there was not enough system space for the loader task control block (TCB). Increase system space. |
| LOAD-ERR TYPE=SYS | Indicates there was not enough system space for the segment descriptor entry. |
| LOAD-ERR TYPE=TKID | Indicates invalid taskid syntax. |
| LOAD-ERR TYPE=USE | Indicates an attempt to load a task with one of the same name that is presently in use. |
| LU-ERR | Indicates an invalid lu number or lu assignment was attempted, an invalid fd was encountered, or a nonzero account number was specified. |
| NOAC-ERR | Indicates accounting is not supported for this system. |
| NO ACTIVE TASK(S) FOUND | Indicates no active tasks were found in the system. |
| NOBC-ERR | Indicates a BFILE, BRECORD, FFILE, or FRECORD command was entered and bulk file command support is not included in the operating system. |
| NODA-ERR | Indicates a direct access support was not included in the operating system. |

Table 4-31. OS/32 Operator Command Error Messages (continued)

| Error Message | Indication |
|---|---|
| NOFF-ERR | Indicates an attempt was made to mark a disk device on when the integrity of the data on the disk was questionable. Run the FASTCHEK Utility on the disk. The disk can be marked on protected. |
| NOPR-ERR | Indicates a command was entered requiring more parameters than specified in the command line. |
| NO SYSTEM LOG ASSIGNED | Indicates no system log has been set. |
| NROL-ERR | Indicates an OPTIONS ROLL command was directed to a nonrollable task. |
| NUL-ERR | Indicates an attempt was made to rename the null device. |
| OFF-ERR | Indicates an ERROR LOG command specified the OFF parameter, but the error recording function was already off. |
| ON-ERR | Indicates an ERROR LOG command was entered twice with the ON parameter specified. |
| OPT-ERR | Indicates a conflict exists between requested options and options specified at Link time. |
| PARM-ERR | Indicates a command was entered with invalid parameters. |
| PERD-ERR | Indicates the number of minutes specified for the error log readout period was not a number from 1 to 1440. |
| PRIV-ERR | Indicates the access privilege mnemonic was syntactically incorrect. |
| READ-ERR | Attempt was made to mark a disk on that is not hardware-enabled for write, or that returns an I/O error when it is accessed. |
| RENM-ERR TYPE=BUFF | Indicates an error occurred when closing an lu for a RENAME or the system space control blocks are corrupted. |
| RENM-ERR TYPE=NAME | Indicates the new filename already exists in the volume directory or the new device name already exists within the DMT. |
| ROLL-ERR | Indicates a BIAS * command was entered and the currently selected task is rollable, or BIAS * taskid was entered and taskid is a rollable task. |
| SEGMENT REQUEST NOT FOUND | Indicates a DISPLAY MAP command was entered and the requested segment mask was not found, or no tasks exist in memory. |
| SEQ-ERR | Indicates a command was entered out of sequence when:<br>' attempting to pause a task when none was active |

Table 4-31. OS/32 Operator Command Error Messages (continued)

| Error Message | Indication |
|---|---|
| | ' assigning of a currently assigned lu while a task was active<br>' entering an OPTION command for an active task<br>' attempting to continue a task that was not paused |
| SPAC-ERR | Indicates an assign on behalf of a task was refused because system space available for task use was exceeded. Re-establish the task with a larger maximum system space. |
| STAT-ERR | Indicates an attempt was made to mark a device on or off while an lu was assigned to it. |
| SVC6-ERR TYPE=ARGS | Indicates insufficient memory exists between UTOP and CTOP to pass all parameters. |
| SVC6-ERR TYPE=DORM | Indicates an attempt was made to issue an SVC6 to a task that was in the dormant state. |
| TASK-ERR | Indicates a task-related command was entered and there was no currently selected task. |
| TASK(S) NOT FOUND | Indicates the specified task was not found in the system; no tasks found in the system. |
| WRIT-ERR | Indicates an attempt was made to mark a device on that is hardware-protected without the PROTECT option. Use the PROTECT option in the MARK command. |

4-3.6 RDA “SYSTEM TEST” CHECK PROCEDURE.

Table 4-32 contains steps necessary to perform a system test check.

Table 4-32. Initiate Immediate RDA “System Test” Check Procedure

| Step | Command/Action | Comments |
|---|---|---|
| 1. | If the RDA maintenance terminal is in System mode of operation, press the **<Shift>** and **<Port>** keys **simultaneously** and release. | Application Mode selected. |
| 2. | At command line, type:<br>**TERP<Tab>*Password* <Return>** | Application Program stopped. |
| 3. | Press **<Shift>** and **<Port>** keys **simultaneously** and release. | System Mode selected. |
| 4. | Rename the files RDACALIB.DAT and RDASTAT.DAT by typing the following commands at the system prompt:<br>a. **REN RDACALIB.DAT,RDACALIB.*XXX* <Return>**<br>b. **REN RDASTAT.DAT,RDASTAT.*XXX* <Return>**<br>**NOTE**<br>*XXX* is the file name extension expressed as the current month, in hex, and the year in decimal. Example October 1990 = A90. | |
| 5. | Bring the RDA up by typing the following command at the system prompt: **RDAUP<Return>**. | |

# Section 4-4. RDA Control/Diagnostic System Operations

## 4-4.1 INTRODUCTION.

The CDS is a microprocessor driven network that permits system configuration, system control, and monitoring functions during system operation. If a fault or error condition occurs, the CDS formats messages and issues them to the RDA maintenance terminal. This section describes the CDS operating modes, commands, and messages.

## 4-4.2 OPERATING MODES.

The CDS functions in either of two operating modes: passive or interactive. The two modes are described below.

Passive Mode

- Normally in effect
- Transparent to user
- Cannot accept operator commands

Interactive Mode

- Mode in effect only by operator action
- CDS command set available to:
  - configure system
  - reconfigure system
  - check system status.

The following paragraphs give the procedure for entering and exiting the CDS interactive mode.

4-4.2.1 Entering CDS Interactive Mode Procedure. Perform the following steps to enter the CDS interactive mode:

1. If the system console screen is displayed at the RDA maintenance terminal, proceed to step 3. If not, proceed to step 2.
2. At RDA maintenance terminal, press the **<Shift>** and **<Port>** keys **simultaneously** to display system console screen.
3. Press the **<Ctrl>** and **V** keys **simultaneously** twice and then press **<Return>** until `CDS>` prompt appears.

**NOTE**

Upon entering CDS interactive mode, the CDS prompt `CDS>` will be displayed and CDS commands can be entered at the terminal.

4-4.2.2 Exiting CDS Interactive Mode Procedure. Perform the following steps to exit the CDS interactive mode:

1. At the system console screen, enter **CO** at the CDS prompt and press **<Return>** twice.

**NOTE**

After **<Return>** is pressed twice, the normal system prompt "*" will be displayed.

2. Press the **<Shift>** and **<Port>** keys **simultaneously** to display the application terminal screen and return to normal operation.

4-4.3 ENTERING CDS COMMANDS.

1. To enter CDS commands, type the command or its mnemonic (abbreviated form of command) immediately after the CDS prompt (CDS>) and then press the **<Return>** key. Commands can be entered using either upper or lower case letters.

2. To enter multiple commands on one line, enter the commands separated by semicolons. The commands will be executed in sequence from left to right. If there is an invalid command in the command line, all commands to the left of the invalid command will be processed. A caret character (^) will appear under the invalid command, and an error message will be displayed on the screen. A new command can be entered after another CDS prompt is displayed.

4-4.3.1 Correcting Command Entries. Command entries can be corrected only if the **<Return>** key has not been pressed. To correct a typing error, delete the incorrect letters of the command one letter at a time using the **<Backspace>** key or by **simultaneously** pressing the **<Ctrl>** and **H** keys, and then type in correct letters. To correct an entire line, **simultaneously** press the **<Ctrl>** and **X** keys. The system will ignore the command typed and return to the CDS prompt.

4-4.3.2 Command Input Error Messages. The following is a description of the error messages that will be displayed if there was a command input error:

| Error Message | Description |
|---|---|
| MNEMONIC ERROR | An invalid command or option mnemonic has been entered. Use the HELP command to list the valid commands and mnemonics. |
| INVALID ARGUMENT | An input value is inappropriate for the command/option. Use the HELP command to list the valid input values. |
| SYNTAX ERROR | A missing or invalid delimiter has been input. Use the HELP command to list the valid input format |

4-4.4 CDS COMMAND SET.

The CDS commands are grouped into three command sets: Key 0, Key 1, and Key 2. Refer to Table 4-33 for a listing of the CDS commands. Key 0 is the default command set and is

immediately accessible after system startup. Key 1 includes all of the Key 0 commands plus the commands native to Key 1. Key 2 includes all of the Key 0 and Key 1 commands plus the commands native to Key 2. Key 1 and Key 2 can be accessed only with the correct passwords as described in the following paragraph.

4-4.4.1 Accessing Key 1 and Key 2 Commands. Key 1 must be accessed before Key 2 can be accessed. To access Key 1 command set, enter **KEY 1,** <***Key 1 password***> at the CDS prompt. The Key 1 password can be obtained from the proper authorities. To access Key 2 command set, enter **KEY 2,** <***Key 2 password***> at the CDS prompt.

4-4.4.2 Key 0 Commands. Key 0 commands are used to determine system status, designate a local or remote terminal as the system terminal, and to access the Key 1 commands. Refer to Table 4-34 for a description of Key 0 commands and command formats.

4-4.4.3 Key 1 Commands. Key 1 commands are used to configure and reconfigure the system, perform tests on some system modules, and provide for debugging of user-level programs. Refer to Table 4-35 for a description of Key 1 commands and command formats.

4-4.4.4 Key 2 Commands. Key 2 commands are used to troubleshoot the processor and write user-defined microcode (contained in writable control store). Refer to Table 4-36 for a description of Key 2 commands and command formats.

## 4-4.5 CDS COMMAND SYNTAX.

The following syntax conventions are used in all CDS command formats:

a. The mnemonic or abbreviated form of a command that must be entered is underlined. If no part of a command is underlined, the entire command must be entered.

   Example: LOCAL

b. Lower-case letters represent parameters or denote information provided by the user:

   Example: STATUS nn,ss

c. Punctuation must be entered exactly as shown. Commas separate parameters.

   Example: SET NH,SS,CMM,AAA,M,I

d. Commas preceding braces or inside braces must be entered if one of the optional parameters is chosen.

   Example: REMOTE ON(,T)

e. All ellipsis (...) represents an indefinite number of parameters or a range of parameters.

   Example: MODIFY [mnem,].Rn,data[,data,...,data]

f. Brackets represent an optional parameter.

Example: HALT [mnem]

g. Braces represent required parameters of which one must be chosen.

Example: RECHO {OFF / ON}

h. Boldface represents a default option.

Example: ESCAPE {[AB] / [∧ V ∧ V]}

4-4.6 ERROR AND ADVISORY MESSAGES.

CDS error and advisory messages report system malfunctions to the system terminal. The error messages are event driven and identify a system component that has a fault or exceeds some nominal range. Advisory messages either inform the operator that a fault was corrected or serves as a warning that a potential fault may exist. The three sets of CDS error messages are:

- Global - general in nature and typically reveal link errors
- Power subsystem - provides information on the power supply
- M3200 Processor - reveals faults in the M3200 or its associated processor

The CDS error message format is:

NODE#NN, SLOT#SS
ERROR UU EEEE
ERROR MESSAGE TEXT

Where:

NN and SS identify the cabinet and slot number of the unit reporting the condition.
UU corresponds to the unit number:
08 = SPS for M3200
11 = M3200
30 = Global

EEEE is the four-digit error message number.

The following tables contain a numerical listing and description of the CDS error and advisory messages:

- Table 6-9 Global (30) Error Messages
- Table 6-8 Power Subsystem (08) Error Messages
- Table 6-11 M3200 (11) Error Messages

- Table 4-37 Global Advisory Messages
- Table 4-38 Swingout Power Subsystem (SOPS) Advisory Messages
- Table 4-39 M3200 Advisory Messages

Table 4-33. CDS Key Commands

| | | |
|---|---|---|
| Key 0 Commands | | |
| Continue | Key | Status |
| Escape | Normal | Talk |
| Help | Remote | Time |
| History | Review | |
| Inquire | Send | |
| Key 1 Commands | | |
| Alias | Margin | Set |
| Bias | Modify | Shift |
| Clear | Override | Signof |
| CMM | Password | Signon |
| Examine | Power | Single |
| Go | Rel | Terminal |
| Halt | Reset | Using |
| Initialize | Run | |
| Key 2 Commands | | |
| Load | | |
| Local | | |
| Recho | | |
| Start | | |
| Stop | | |
| Step | | |

Table 4-34. KEY 0 Commands and Format

**CONTINUE**

The **CONTINUE** command causes the CDS to relinquish control of the system terminal; however, unsolicited error messages, when issued, are sent first to running software for error handling. If the software does not acknowledge receipt of the error, the CDS takes control of the terminal, displays the message, and returns control back to the system software. A message tells the system software that terminal control was momentarily lost. This alerts the operating system that configuration information may have changed. Do not change configuration while the OS/32 is running because it may adversely affect the system.

Command Format

CONTINUE

| Parameters | Description |
|---|---|
| none | |

**ESCAPE**

The **ESCAPE** command establishes a two-character sequence that shifts the CDS and terminal control from the system software to the CDS.

Command Format

ESCAPE AB

| Parameters | Description |
|---|---|
| AB | Any two alphanumeric characters to be used for escape sequence. Do not use an escape sequence that is also a command used by the operating system. The default escape sequence is **<Ctrl>V<Ctrl>V**.<br>Once an escape command has been executed to change the escape sequence to (for example) **<Ctrl>Z<Ctrl>Z**, then **<Ctrl>Z<Ctrl>Z** would have to be pressed in order to escape to the Control Diagnostic System. |

**HELP**

The **HELP** command lists the current set of commands, if no parameter is specified. If a command is specified, the HELP command displays a brief description of the specified command and the command's syntax.

Command Format

HELP [command]

| Parameters | Description |
|---|---|
| Command | A command or its mnemonic from the current set of commands. |

Table 4-34. KEY 0 Commands and Format (continued)

**HISTORY**

The **HISTORY** command displays the last three error messages sent to the terminal. This allows the recovery of lost messages in the event of a power failure. Each time the command is entered, one of the last three messages is displayed. The error messages are displayed in a first in, first out format. To determine which message is being displayed, the [,P] option of the TIME command must be set. (See the TIME command for more information)

Command Format

HISTORY

| Parameters | Description |
|---|---|
| None | |

**INQUIRE**

The **INQUIRE** command is used to determine the current CDS master, the current mode of the CDS terminal handler, the escape character sequence, and the contents of the ALIAS list.

Command Format

INQUIRE

| Parameters | Description |
|---|---|
| None | |

**KEY**

The **KEY** command is used to select either the Key 0, Key 1, or Key 2 command sets. It can also be used to change the Key 1 password.

Command Format

KEY $\left\{ \begin{array}{c} 0 \\ 1,\ \text{password1}[,\ \text{npassword}] \\ 2,\ \text{password2} \end{array} \right\}$

| Parameters | Description |
|---|---|
| Ø | Selects Key 0 command set. |
| 1,password1 | Selects Key 1 command set. Password1 is Key 1 password which must be entered. |
| ,npassword | Optional new password (up to 12 characters). Key 1 password will be changed if npassword is entered. |
| 2,password2 | Selects Key 2 command set. Password2 is Key 1 password followed by a 2. Key 2 command set can only be selected if Key 1 is current command set. |

Table 4-34. KEY 0 Commands and Format (continued)

**NOTES**

Upon completion of Key 1 or Key 2 command usage, select Key 0 as current command set by entering KEY 0 to ensure that Key 1 or Key 2 commands are not accessible to unauthorized personnel.

The key command cannot accept the continuation character(;) used to enter multiple commands as the semi-colon will be interpreted as part of the password.

**NORMAL**

The **NORMAL** command is entered at the remote terminal to invoke the local only mode which disconnects the remote terminal. This command is used when the remote terminal is the system terminal. This command is the same as pressing the <Break> key at the local terminal.

Command Format

NORMAL

| Parameters | Description |
|---|---|
| None | |

**REMOTE**

The **REMOTE** command establishes the remote terminal as the system terminal immediately if no parameters are specified. The remote user can then enter any system or CDS command. All remote terminal activity is echoed on the local terminal. This command is entered from the local terminal. (See NORMAL command for disabling REMOTE)

Command Format

REMOTE [ON [,T]] [OFF]

| Parameters | Description |
|---|---|
| ON | Permits the remote user to access the system without local operator assistance, provided they enter the correct password. |
| T | Indicates that the remote terminal is connected directly to the CDS patch panel. If modems are used, omit the T option. |
| OFF | Allows the remote user to connect to the CDS after the password is entered. System access is achieved with local operator assistance. |

**NOTE**

The remote mode cannot be invoked if the remote terminal is not connected. If the remote terminal is disconnected or goes off-line, the system reverts to the local only mode.

Table 4-34. KEY 0 Commands and Format (continued)

**REVIEW**

The **REVIEW** command displays the configuration options of the power supply, composite memory module, and the system bus interface. With no parameters specified, the REVIEW command displays the system level configuration.

Command Format

REVIEW [nn[,ss]]

| Parameters | Description |
|---|---|
| nn | Node or cabinet number (1 to 14).<br>When nn is specified, the REVIEW command displays cabinet level configuration of specified cabinet or node. |
| ss | Slot number (Ø to 21).<br>When ss is specified, the REVIEW command displays the slot level configuration. |

**SEND**

The **SEND** command sends a command to the slave CDS boards.

Command Format

Send { nn, ss, Command Line<br>mnem, Command Line<br>Command Line }

| Parameters | Description |
|---|---|
| nn,ss,Command Line | Sends Command Line to node NN, slot SS |
| mnem,Command Line | Sends Command Line to node and slot specified by mnem |
| Command Line | Sends command Line to node and slot specified by current USING. |
| nn | Node or Cabinet number 1 to 14 |
| ss | Slot number Ø to 21 |
| mnem | Up to 5 character mnemonic in the alias list |
| Command Line | Command text that is transmitted to the slave CDS board |

**STATUS**

The **STATUS** command displays the current state of system modules. This command is always slot specific.

Table 4-34. KEY 0 Commands and Format (continued)

Command Format

STATUS nn,ss

| Parameters | Description |
|---|---|
| nn | Node or cabinet number (1 to 14). |
| ss | Slot number (Ø to 21). To determine the status of the power supply in a cabinet, enter 28 for the slot number. |

Example: STA 1,28

**TALK**

The **TALK** command establishes communications between local and remote operators. Character display on the local terminal slows down to the rate of the remote terminal. If the remote terminal is disconnected or goes off-line, the system reverts to local only mode.

Command Format

TALK

| Parameters | Description |
|---|---|
| None | |

**TIME**

The **TIME** command is used to: display the current date and time (if no parameters are specified), specify whether messages (either error or advisory) will be identified with a time tag when displayed (when p or n parameters are specified), or to set the time and date.

Command Format

TIME [P] [N] [U,] day, MM/DD/YYYY, hh : mm [, P] [E,] day, MM/DD/YYYY, hh : mm [, P]

Table 4-34. KEY 0 Commands and Format (continued)

| Parameters | Description |
|---|---|
| P | All unsolicited messages are displayed without date and time stamp. |
| N | All unsolicited messages are displayed with data and time stamped. |
| U | Date is displayed in USA format. U is default if neither U or E are entered. |
| E | Date is displayed in European format. |
| day | Day of week: SUNDAY, MONDAY, TUESDAY, WEDNESDAY, THURSDAY, FRIDAY, or SATURDAY. |
| MM | Month (1 through 12) |
| dd | Day (1 through 31) |
| yyyy | Year (4 digit year; i.e., 2000=2000; a 2 digit year defaults to 19xx) |
| hh | Hour (1 through 23) |
| mm | Minute (ØØ through 59) |

Table 4-35. KEY 1 Commands and Format

**ALIAS**

The **ALIAS** command sets an Alias mnemonic for slave CDS boards.

Command Format

| | |
|---|---|
| ALIAS | nn,ss,mnem |

| Parameters | Description |
|---|---|
| nn | Node or cabinet number 1 to 14 |
| ss | Slot number, Ø to 21 |
| nmem | Up to 5 character mnemonic in the alias list. |

**BIAS**

The **BIAS** command is used to set a bias address for subsequent EXAMINE and MODIFY commands. If no parameter is specified, the BIAS command will display current bias value.

Command Format

| | |
|---|---|
| BIAS | [= xxxxxxxx] |

| Parameters | Description |
|---|---|
| xxxxxxxx | The hexadecimal address to be added to the address given in any subsequent EXAMINE or MODIFY commands. |

**CLEAR**

The **CLEAR** command deletes a device entry or an entire cabinet entry from the CDS configuration tables. Such action may be necessary when a configuration conflict exists or when a module has been physically relocated.

Command Format

| | |
|---|---|
| CLEAR | nn,ss |

| Parameters | Description |
|---|---|
| nn | Node or cabinet number (1 to 14). |
| ss | Slot number (Ø to 21). Use 29 for ss if entries for entire cabinet is to be deleted. |

**NOTE**

Before CLEARing a device, ensure that the corresponding S-bus is powered off (using POWER or SET PSC) or the device will reassert its configuration.

Table 4-35. KEY 1 Commands and Format (continued)

**CMM**

The CMM command sets the CMM options. This command is used for testing purposes only.

Command Format

CMM nn,ss,a,b,c

| Parameters | Description |
|---|---|
| nn | Node or cabinet number (1 to 14). |
| ss | Slot number (Ø to 21). |
| a | Error Check and Correction Status (1:Disable and Ø:Enable) |
| b | Refresh Status (1:Disable and Ø:Enable). |
| c | Scrubber Status (1:Disable and Ø:Enable). |

**NOTE**

When testing is complete, all three options must be reset to ENABLED.

**EXAMINE**

The **EXAMINE** command displays the contents of control store, various registers, or memory locations. The EXAMINE command accommodates up to three arguments. The first argument is optional and provides a means of selecting a M3200 other than the one designated by the USING command. If the argument is omitted, the USING M3200 is used. The second argument identifies the type of element and its address to be examined or first element to be examined. The third argument specifies the number of subsequent elements to be displayed. (The default is one element.)

Command Format

EXAMINE [mnem,] [ .CS address | .Rn | .Fn | .Dn | .L | .P | address | address1/address2 ] [, count]

Table 4-35. KEY 1 Commands and Format (continued)

| Parameters | Description |
|---|---|
| mnem | The alias mnemonic of the M3200 controlling the EXAMINE command. If this option is omitted, the default is set by the USING M3200 command. |
| .CS address | The processor's control store address is displayed. To examine control store locations, the processor must be stopped. (Refer to Key 2 STOP command.) Address is the hexadecimal address of the control store. |
| .Rn | Examines the general registers. The *n* is the decimal number of the general register or the first general register to be displayed if the count option is used. |
| .Fn | Examines the single precision floating point registers. The *n* is the decimal number of the single precision floating point register or the first of the set to be displayed if the count option is used. |
| .Dn | Examines the double precision floating point registers. The *n* is the decimal number of the double precision floating point register or the first of the set to be displayed if the count option is used. |
| .L | Displays the location counter. |
| .P | Displays the program status word (PSW). |
| address or address1/address2 | The address field can contain up to eight hexadecimal digits. Leading zeros are not necessary. If the count option is used, up to 1000 halfwords can be displayed. The address given is copied into the processor's PSW location count field. A bias value can be used when examining the main memory. (See the BIAS command.) |

## NOTES

Data fetches from the EXAMINE command can be relocated in memory if enabled by the current PSW. If a memory fault occurs and is detected by the current PSW, an unsolicited error message is generated.

EXAMINE will only display the contents of control store, various registers, or memory locations if the processor is halted (see the HALT command). If the processor is running, the operator can examine the contents of local or shared memory by using the EXAMINE command under OS/32. The contents of the general, single floating point, and double floating point registers can be viewed using the OS/32 commands display registers, display float, and display float, respectively.

Table 4-35. KEY 1 Commands and Format (continued)

**GO**

The **GO** command is used in one of two forms. The first form is in the single step mode (see the SINGLE command) to execute the next user instruction. The 'mnem' argument permits selection of a processor other than the designated USING M3200. (See the USING command). If the M3200 is not in single step mode, the following message is displayed:

```
INVALID REQUEST, SINGLE STEP HAS NOT BEEN SELECTED
```

The second form initializes the specified M3200. The processor under this M3200 performs its power-up sequence. Control is given to the newly loaded software or the processor power-up handler which can then pass control to the resident software.

Command Format

GO [mnem] [, IPL / , POWER]

| Parameters | Description |
|---|---|
| mnem | The alias mnemonic of the M3200 controlling the GO command. |
| IPL | Controls the power-up sequence if the initial program loader (IPL) is configured to the enabled state. If it is disabled, the control is given to the "POWER" entry. |
| POWER | Controls the power-up sequence. (Local Initialize) |

**HALT**

The **HALT** command interrupts a running processor and directs it to the breakpoint instruction handler. When the HALT command is entered, either of the following messages is displayed:

```
DAY MM/DD/YY HH:MM NODE#MM, SLOT#NN
PPPPPPP LLLLLLLL   CPU HALTED (with Time P option) or

NODE#MM SLOT#NN
PPPPPPP LLLLLLLL   CPU HALTED (with Time H option)
```

Where:
- PPPPPPPP is the 32-bit program status word (PSW) value in effect at the breakpoint execution.
- LLLLLLLL is the 32-bit location counter value which points to the breakpoint instruction.

Command Format

HALT [mnem]

| Parameters | Description |
|---|---|
| mnem | The alias mnemonic of the M3200 controlling the HALT command. If this option is omitted, the default is set by the USING M3200 command. |

Table 4-35. KEY 1 Commands and Format (continued)

**INITIALIZE**

The **INITIALIZE** command simulates a power fail/restore event. If a parameter is specified, the specified master produces the signals system clear (SCLR), processor clear (PCLR), and memory clear (MCLR) on its associated S-Bus that includes I/O which initializes the specified master. If no parameter is specified, all masters are initialized. Unlike the RESET command, INITIALIZE clears memory.

Command Format

INITIALIZE [nn]

| Parameters | Description |
|---|---|
| nn | Node or cabinet number (1 through 14) of master to be specified for initialization. |

**MARGIN**

The **MARGIN** command sets the voltage margin of the PSC voltages for test purposes only. The PSC voltage should be reset to NOMINAL when testing is concluded.

Command Format

MARGIN [nn,] { NOMINAL / LOW / HIGH }

| Parameters | Description |
|---|---|
| nn | The node or cabinet number (1 to 14). If nn not specified, all cabinets/nodes are selected. |
| 29 | The only valid slot number for this command. (not used) |
| b | The bus number (1 to 4). (not used) |
| NOMINAL | Sets the voltage to the normal operating voltage. |
| LOW | Sets the voltage low to stress test intermittent problems. |
| HIGH | Sets the voltage high to stress test intermittent problems. |

**NOTE**

If there is more than one power module on the specified bus, all the modules on that bus are adjusted to the same margin.

Table 4-35. KEY 1 Commands and Format (continued)

**MODIFY**

The **MODIFY** command can change the contents of registers, memory locations, and control store. The MODIFY command accommodates two or more hexadecimal arguments. The first argument identifies the address and nature of the first argument to be modified. The second is the hexadecimal data that replaces the first selected register or memory location. Successive data values modify successive register or memory locations.

Command Format

MODIFY [mnem,] { .CS address / .Rn / .Fn / .Dn / .L / .P / address } , data [, data, ..., data]

| Parameters | Description |
|---|---|
| mnem | The alias mnemonic of the M3200 controlling the MODIFY command. If this option is omitted, the default is set by the USING M3200 command. |
| .CS address | To modify the control store locations, the processor must be stopped. (Refer to the Key 2 STOP command). Selects the control store location for modification. |
| .Rn | The .R identifies the fixed point general registers for modification. The *n* is selected by the current program status word (PSW).<br>Example:<br>MOD .RO,Ø,11111111,22222222<br>Modifies general registers, zero through two by inputting Øs into RO, 1s into R1 and 2s into R2. |
| .Fn | The .F identifies the single precision floating point registers for modification. The *n* selects the chosen register or the first of consecutive registers if more than one data is used. |
| .Dn | The .D identifies the double precision floating point register for modification. The *n* selects the chosen register of the first of consecutive registers if more than one data is used. |
| .L | The .L identifies the location counter (LOC) for modification. |

Table 4-35. KEY 1 Commands and Format (continued)

| Parameters | Description |
|---|---|
| .P | The .P selects the program status word (PSW) for modification.<br>**NOTE**<br>Do not set bit 9 of the PSW. It causes unpredictable processor action. Bit 9 is reserved for future use. Bit 9 is set when any of the following data is input to the first data field of this command.<br>XX4XXXXX<br>XX5XXXXX<br>XX6XXXXX<br>XX7XXXXX<br>XXCXXXXX<br>XXDXXXXX<br>XXEXXXXX<br>XXFXXXXX<br>X denotes any hexadecimal number. |
| address | The address field contains up to eight hexadecimal digits. Leading zeros are not necessary. The address field specifies the address or the first of consecutive addresses to be modified. MODIFY command data writes can be relocated in memory if enabled by the current PSW.<br>**NOTE**<br>If a memory fault occurs and detection is enabled by the current PSW, an unsolicited error message is generated. |
| data | Contains the hexadecimal data to replace the specified memory location, register or control store. Successive data fields replace consecutive fields. |

**OVERRIDE**

The **OVERRIDE** command overrides the CDS master arbitration process and assigns a new CDS master.

Command Format

| | |
|---|---|
| OVERRIDE | xx,yy |

| Parameters | Description |
|---|---|
| xx | The current CDS master node or cabinet number. |
| yy | The new CDS master node or cabinet number. |

Table 4-35. KEY 1 Commands and Format (continued)

**PASSWORD**

The **PASSWORD** command establishes the password for the remote terminal for access to the system. This password is not the same as the Key password used to change CDS command sets. The remote operator does not need this password if the local operator used the SIGNON command.

Command Format

| | |
|---|---|
| PASSWORD | xxxxxxxxxxxx |

| Parameters | Description |
|---|---|
| xxxxxxxxxxxx | Password to be established (any combination of 12 or less alphanumeric characters except blanks, commas, or semicolons). |

**POWER**

The **POWER** command enables or disables power to the entire system or a specific cabinet.

Command Format

| | |
|---|---|
| POWER | [nn,] x[,type] |

| Parameters | Description |
|---|---|
| nn | The node or cabinet number (1 to 14). If this option is omitted, all cabinet power is enabled or disabled. |
| x | ON or OFF |
| type | Enables or disables P5 or P5U power. If this option is omitted, both P5 and P5U are enabled or disabled. |

**REL**

The **REL** command displays the contents of the memory module error logger. Every memory module stores all data errors in an error logger.

Command Format

| | |
|---|---|
| REL | nn,ss[,x][,CL] |

| Parameters | Description |
|---|---|
| nn | The node or cabinet number (1 to 14). |
| ss | The slot number (Ø to 21). |
| x | The memory module array (A, B, C, or D). If this option is omitted, all arrays are displayed. |
| CL | This option clears the error logger array. |

Table 4-35. KEY 1 Commands and Format (continued)

**RESET**

The **RESET** command causes a specific master or all masters to issue the processor clear (PCLR) and system clear (SCLR) signals on the associated S-bus. PCLR and SCLR initialize the processor(s) and I/O devices. RESET does not clear system memory.

Command Format

| | |
|---|---|
| RESET | [nn] |

| Parameters | Description |
|---|---|
| nn | The node or cabinet number (1 to 14) of master to be reset. If this option is omitted, all masters are reset. |

**RUN**

The **RUN** command directs the M3200 to transfer control to the processor. Execution of the user code begins with the instruction addressed by the current PSW location count (LOC) field or the address specified by the RUN command. System terminal control is retained by CDS until the SHIFT or CONTINUE commands are entered or the software sends a SHIFT function to CDS.

When CDS has relinquished terminal control, any error messages received by the CDS are sent to the CPU's M3200 for handling by the executing software. Terminal control is returned to CDS if the running software executes a breakpoint instruction (operation code X′88′).

Command Format

| | |
|---|---|
| RUN | [mnem,] [address] |

| Parameters | Description |
|---|---|
| mnem | The alias mnemonic of the M3200 controlling the RUN command. If this option is omitted, the default is set by the USING M3200 command. |
| address | The address specifies where user code execution begins. |

Table 4-35. KEY 1 Commands and Format (continued)

**SET**

The **SET** command configures the system and various modules. The entered data is copied into the CDS master configuration tables and subordinate masters for redundancy.

The CDS processes module options in two stages. First, the unit type (i.e., CMM, M3200, or PSC) is entered into the CDS configuration tables and the unit is issued the unit-specific options. During the second stage, additional tables are made as the unit-specific options are processed. If the specified node and slot do not contain the specified unit type, the following type of message is displayed:

```
CABINET#NN, SLOT#SS
ERROR    3Ø ØØØ8
CONFIGURATION MISMATCH, ##?SLOT=SS
```

If the assigned node or slot number is outside the designated range, `INVALID ARGUMENT` is displayed.

The SET command can reassign cabinet slot assignments. The slots must be cleared (refer to the CLEAR command) and the boards physically relocated before configuration data is reentered. The following message is displayed if the old assignment was not cleared prior to entering the new configuration assignment:

```
CABINET#NN, SLOT#NN
ANOTHER DEVICE PRESENT!! IMPLEMENT "CLEAR" CMD
```

The SET command for each type of module and its options are listed and described separately.

SET composite memory module (CMM)

The CMM cannot be configured until its S-Bus is powered-up. (Refer to SET PSC). Each CMM is configured by a separate SET CMM command with the starting addresses sequentially numbered.

Command Format

SET nn,ss,CMM,aaa,m,i

| Parameters | Description |
|---|---|
| nn | The node or cabinet number (1 to 14). |
| ss | The slot number (Ø to 21). |
| CMM | The unit type for composite memory module (CMM) configuration. |
| aaa | The three most significant hex digits of the initial address ØØØ to FFF. The default is X′ØØØØ ØØØØ′ |

Table 4-35. KEY 1 Commands and Format (continued)

| Parameters | Description |
|---|---|
| m | The mode description:<br>E - Enabled<br>D - Disabled<br>The Default is disabled |
| i | Interleaving options:<br>Ø - Non-Interleaving<br>2 - 2-Way Interleaving (Not used).<br>4 - 4-Way interleaving (Not used).<br>The default option is non-interleaving. |

The SET commands for the CMMs in the PUP are as follows:

SET 1,6,CMM,ØØØ,E,Ø

**SET M3200**

The associated S-Bus must not be powered before the M3200 is configured.

Command Format

| | |
|---|---|
| SET | nn,ss,M3200,i,d,m,p,l [,alias] |

| Parameters | Description |
|---|---|
| nn | The node or cabinet number (1 to 14). |
| ss | The slot number (Ø to 21). |
| SBI | The unit type for S-Bus interface (SBI) configuration (M3200). |
| i | The S-Bus ID (Ø to 255) must be unique and multiples of four. |
| d | The DMI S-Bus ID (254 to Ø). DMIs are assigned an even/odd number pair for S-Bus IDs. DMI IDs are physically strapped and cannot be changed at the system terminal. When the M3200 configuration is SET, the S-Bus ID for the DMI must agree with physical strapping. The initial DMI ID is 254. The DMI listed in the configuration tables is the DMI with the MUX I/O bus. |
| m | The mode options are:<br>D - Disable<br>E - Enable CPU mode<br>A - Enable APU mode (not used)<br>I - Enable IPU mode (not used)<br>The M3200 executes Self-tests 1 and 2 when enable CPU mode (E) is SET. If no faults occur, the M3200 checks for its processor. If the processor exists, the M3200 downloads the appropriate microcode from local read-only-memory (ROM) to the microprocessor's control store. |

Table 4-35. KEY 1 Commands and Format (continued)

| Parameters | Description |
|---|---|
| P | The power-up action options are:<br>C - Go to CDS interactive mode<br>I - Go to IPL sequence<br>S - Go to resident software<br>W - Go to IPL sequence for cold start, or Go to resident software for warm start<br>The console service mode (C) loads microcode into control store and the IPL function does not occur. The IPL sequence mode (I) direct the system to initiate the IPL function which allows the boot loading procedure. The resident software mode (S) returns the system to previously running software in the event of a power-fail/restore situation. If memory becomes corrupted during the power failure, the system will default to the console service mode. The warm start mode (W) returns the system to the running software after a power-fail/restore if memory was not corrupted. If memory was corrupted or not running at the power failure, the IPL function occurs.<br>The IPL parameters consist of the O.S. device code, device address, controller address, SELCH address, and either the number of filemarks to skip before reaching the operating system (streamer tape) or the file name of the operating system (disk file).<br>These parameters permit the processor's loader storage unit (LSU) to locate and load the operating system if the IPL is initiated by power-up or a GO command. The IPL interactive session is invoked by entering zeros in all the IPL fields (Ø,Ø,Ø,Ø,Ø). |
| alias | An optional name is used to establish an identity for a M3200. This can be helpful when using interactive commands (i.e., RUN, GO, RESET, etc.). Any name up to five characters can be used as an alias. |

**SET Direct Memory Interface (DMI)**

The DMI does not support the CDS. Its mnemonic can be entered with the SET command when establishing system configuration. This allows the REVIEW command to display in which slot(s) the DMI(s) reside(s).

Command Format

| | |
|---|---|
| SET | nn,ss,DMI |

| Parameters | Description |
|---|---|
| nn | The node or cabinet number (1 to 14). |
| ss | The slot number (Ø to 21). |
| DMI | The unit type for direct memory interface. |

Table 4-35. KEY 1 Commands and Format (continued)

**SHIFT**

The **SHIFT** command causes the CDS to relinquish the system terminal to the running software and directs all unsolicited error messages generated by CDS immediately to the terminal. If a fault occurs during passive mode, the CDS generates a message, seizes terminal control, displays the message, and relinquishes control back to software. Use CONTINUE rather than SHIFT to invoke passive mode and transfer terminal control because OS/32 can communicate with CDS. Once this command is entered, the CDS prompt (CDS>) no longer appears because the operating system takes control of the system terminal.

Command Format

SHIFT [mnem / ss]

| Parameters | Description |
|---|---|
| mnem | The mnemonic associated with one of the M3200s in the alias list. This M3200 is flagged as the primary target for unsolicited messages. |
| ss | The slot number (Ø to 21) of the M3200. |

**SIGNOF**

The **SIGNOF** command disconnects the remote terminal from the system. SIGNOF is entered from either the remote or local terminals after the <BREAK> key is pressed by the local operator.

Command Format

SIGNOF

| Parameters | Description |
|---|---|
| None | |

**SIGNON**

The **SIGNON** command is entered at the local terminal and system control is immediately transferred to the remote terminal. The remote operator can control the system without entering a password. Once control is transferred, the system is in remote owns mode until the remote operator enters SIGNOF or the local operator presses the <BREAK> key and enters SIGNOF.

Command Format

SIGNON

Table 4-35. KEY 1 Commands and Format (continued)

| Parameters | Description |
|---|---|
| None | |

**NOTE**

SIGNON overrides the use of the remote password. If used, it should be reset using the SIGNOF command.

**SINGLE**

The **SINGLE** command is used to single step through user-level instructions at a specified starting address. This command works with the designated USING M3200, or the M3200 identified by the mnem argument. The HALT command must be entered before using the SINGLE command. The SINGLE command places the processor in single step mode. The GO command must be entered at the end of each instruction. For each GO command, the new value of the current PSW status and LOC fields are displayed. To cancel the SINGLE command, a RUN or a HALT command must be entered.

Command Format

| | |
|---|---|
| SINGLE | [mnem] [,address] |

| Parameters | Description |
|---|---|
| mnem | The M3200 mnemonic from the ALIAS list. |
| address | The hexadecimal starting address. |

**TERMINAL**

The **TERMINAL** command allows you to use multiple processor control stations (MPCS) in place of a standard system console.

Command Format

TERMINAL $\begin{bmatrix} C \\ X \end{bmatrix}$

Parameters

C = option to set protocol to clear to send

X = option to set protocol to XON - XOFF

WSR-88D application uses a standard system. Always set TERMINAL to condition X for proper system operation.

Table 4-35. KEY 1 Commands and Format (continued)

**USING**

The **USING** command assigns an M3200 to the associated processor with the MODIFY, EXAMINE, SINGLE, HALT, and RUN commands. This command permits the omission of the mnemonic or alias entry in the respective command lines. (See SET M3200 for information on alias). The USING command remains in effect until another USING command is entered or the system is initialized. The USING command information is not retained by the CDS configuration tables. If no parameters are entered, the USING command displays the M3200 currently being used.

Command Format

USING [mnem / nn, ss]

| Parameters | Description |
|---|---|
| mnem | The mnemonic associated with one of the M3200s in the ALIAS list. |
| nn | The node or cabinet number (1 to 14). |
| ss | The slot number, Ø to 21, containing a M3200. |

Table 4-36. KEY 2 Commands and Format

**LOAD**

The **LOAD** command loads a selected portion of the M3200 microcode from the EPROM into the control store RAM. The HALT command must be entered before the LOAD command can be executed. If sequential loads are performed, previous microcode will be over-written.

Command Format

| | |
|---|---|
| LOAD | [mnem,] x |

| Parameters | Description |
|---|---|
| mnem | The mnemonic associated with one of the M3200s in the ALIAS list |
| x | The group number of the microcode to be loaded.<br>2 = CPU microcode<br>3 = APU microcode<br>5 = Self-test 1 microcode<br>6 = Self-test 2 microcode |

**LOCAL**

The **LOCAL** command invokes the local owns mode. In local owns mode, the local terminal has control, but commands and system responses at the local terminal are echoed on the remote terminal. No commands can be entered at remote terminal.

Command Format

LOCAL

| Parameters | Description |
|---|---|
| None | |

**RECHO**

The **RECHO** command prohibits the local terminal from echoing its activity on the remote terminal screen. Echoing occurs when both the local and remote terminals have accessed the system and the CDS terminal handler is in local owns mode.

Command Format

RECHO $\left\{\begin{matrix}\text{OFF}\\\text{ON}\end{matrix}\right\}$

| Parameters | Description |
|---|---|
| OFF | Disables remote terminal echoing. |
| ON | Reenables remote terminal echoing from the off state. RECHO ON assumes RECHO OFF was previously entered. |

Table 4-36. KEY 2 Commands and Format (continued)

**START**

The **START** command initiates microprogram execution in the designated M3200. This command should be used after the selected microprogram is loaded into the control store.

Command Format

| | |
|---|---|
| START | [mnem,] address |

| Parameters | Description |
|---|---|
| mnem | The mnemonic associated with one of the M3200s in the ALIAS list. |
| address | The starting hexadecimal address of the selected microprogram. The starting addresses are as follows:<br>1 for Self-test 1<br>50 for Self-test 2<br>400 for CPU microcode<br>400 for APU microcode (If APU enabled instead of CPU) |

**STEP**

The **STEP** command enables single step operation of micro program execution. This command is for depot-level maintenance use only.

**STOP**

The **STOP** command halts microprogram execution in the designated M3200.

Command Format

| | |
|---|---|
| STOP | [mnem] |

| Parameters | Description |
|---|---|
| mnem | The mnemonic associated with one of the M3200s in the ALIAS list. |

**NOTE**

If Self-test 1 or 2 was loaded and started, they can be successfully executed by the processor. Do not enter STOP for approximately 30 seconds. This allows adequate time for program execution.

Table 4-36. KEY 2 Commands and Format (continued)

**SET M3200**

The **SET M3200** command has an additional mode not offered by the Key 1 command set, the test mode. The test mode directs the selected M3200 to enter an idle state on power-up or initialization. In the idle state, the M3200 cannot automatically load and execute any microcode (including Self-tests 1 and 2). The feature provides a means of easy loading and execution of any microcode group selected.

Command Format

| | |
|---|---|
| SET | nn,ss,M32ØØ,i,d,m,p,1[,alias] |

| Parameters | Description |
|---|---|
| nn | The node or cabinet number (1 to 14). |
| ss | The slot number (Ø to 21). |
| M32ØØ | The unit type for M32ØØ configuration. |
| i | The S-Bus ID (Ø to 255). |
| d | The DMI S-Bus ID (254 to Ø) |
| m | The mode option is set to T (Test) for test mode. |
| p | The power-up action is set to C (console service) for test mode. |
| l | The IPL parameters are not used in test mode. Zeros or any value can be entered. |
| alias | The mnemonic identifier for this M3200 can be up to five characters. See Key 1 SET M3200 for a more detailed description. |

Table 4-37. Global Advisory Messages

| Message |
|---|
| CABINET # xx ADDED TO CONFIGURATION |
| CABINET # xx DELETED FROM CONFIGURATION |
| CDS MASTER IS CABINET xx |
| CDS MASTER TAKEOVER BY CABINET xx |
| CHANGING MASTER TO CABINET xx |
| COMMUNICATIONS ESTABLISHED TO CABINET xx |
| COMMUNICATIONS ESTABLISHED TO SLOT # nn |
| DEVICE DELETED FROM CONFIGURATION |
| RELOADING CONFIGURATION, CABINET = xx |
| XXX ADDED TO CONFIGURATION, SLOT = yy |

Table 4-38. Swing-Out Power Subsystem (SOPS) Advisory Messages

| Message |
|---|
| NODE NN, SS FAN FAILURE (SEE STATUS) |

Table 4-39. M3200 Advisory Messages

| Message |
|---|
| CONSTANT LOAD COMPLETE |
| CONTROL STORE MEMORY TEST COMPLETE |
| FAILURE IN AUTOMATIC BOOT PROCESS |
| INITIALIZATION IN PROCESS - COMMAND WAS NOT PROCESSED |
| INVALID COMMAND, MICROCODE IN HALT MODE |
| INVALID COMMAND, MICROCODE IN RUN MODE |
| INVALID COMMAND, MICROCODE NOT STARTED |
| INVALID COMMAND, MICROCODE STARTED |
| INVALID COMMAND, SINGLE IS REQUIRED |
| LOAD COMPLETE |
| MICRODIAGNOSTIC TEST |
| PROGRAMMING EEPROM |

# Section 4-5. RDA Application Mode Operations

## 4-5.1 INTRODUCTION.

At the RDA maintenance terminal in application mode, the operator can use the available menus and commands to perform the following major functions:

- Monitor system status
- Inspect and/or change adaptation data
- Communicate with users
- Enter and retrieve maintenance log data
- Perform control operations

This section contains descriptions of the terminal screen, commands, command entry, procedures for performing RDA operations/maintenance tasks, RDA operational states, and RDA control.

**NOTE**

This section refers to the RDADP as UD5, the Receiver as UD4, the Transmitter as UD3, and the Waveguide Pressurization Unit as UD6. Unless otherwise specified, the information also applies to redundant systems UD105, UD104, UD103, and UD106.

## 4-5.2 SCREEN USE AND FORMAT.

The RDA terminal screen is used to display text requested by the operator or automatically generated based on conditions detected by the RDASC program. The screen is also used to display the menus to perform the operations/maintenance tasks. The screen is divided into nine areas, each used for the display of particular types of information. See Figure 4-22 for the screen locations of the areas. The areas can be subdivided into unprotected and protected sections. When the cursor is located in an unprotected section of an area, the depression of an alphanumeric character key will cause the corresponding character to appear on the screen at the location of the cursor. In this way, the operator can enter commands and data for execution by the terminal. On the other hand, when the cursor is located in a protected area, depression of an alphanumeric character key will not change the character currently displayed at the cursor location. The terminal utilizes protection of screen areas to prevent the operator from accidentally destroying displays and instructions. Upon initialization of the program, the main menu will be displayed and the cursor will be automatically placed in the command entry field area on the screen. The following paragraphs describe the nine screen areas.

4-5.2.1 Summary RDA Status Area. The first four lines of the screen comprise the summary RDA status area, a protected area which contains a general indication of the current status of the RDA functional area. This is the only area on the terminal screen that is updated automatically. Refer to Table 4-40 for a description of the summary status and possible states.

4-5.2.2 Alarm Area. Lines 5 and 6 on the screen comprise the alarm area, a protected area which contains alarm messages. If any alarms are detected by RDASC, an appropriate error message is displayed on the terminal. These messages, if any, are displayed in this area in reverse video as they occur provided there is sufficient room to display them.

4-5.2.3 Menu Area. Lines 7 through 20 on the terminal screen comprise the menu area. This area is used by all the menus for their display area. For those menus that are capable of receiving input, unprotected fields exist to receive that input.

4-5.2.4 Paging Line. Line 21 on the screen is the paging line, a protected line with an unprotected area for each valid entry that is permitted on this line. The four possible selections on this line are MAIN MENU, HELP MENU, PAGE FORWARD, and PAGE BACKWARD. Which of these four selections is included in dependent upon the menu currently being displayed. The paging line is not applicable for all adaptation data modification menus.

4-5.2.5 Feedback Line. Line 22 on the screen is the feedback line, a protected line which displays command acknowledgment, entry errors, and illegal entries to the operator in response to commands entered at the terminal.

4-5.2.6 Incoming Messages Area. The left half of line 23 on the screen is the incoming messages area, a protected area which indicates the absence or presence of a message from the operator at the RPG or USER site.

4-5.2.7 Remote Control Request Area. The right half of line 23 on the screen is the remote control request area, a protected area which indicates that the RPG has requested remote control of the RDA. When the RDA has control, this area will display the `Remote Control Requested` message.

4-5.2.8 Command Entry Line. Line 24 on the screen is the command entry line, a protected line with one or two unprotected areas used in entering commands and their associated parameters, if any.

4-5.2.9 CRT Status Line. Line 25 on the screen is the CRT status line. It is a protected area of the screen which contains a brief summary of the current status of the terminal. Normally, the CRT status line is not displayed.

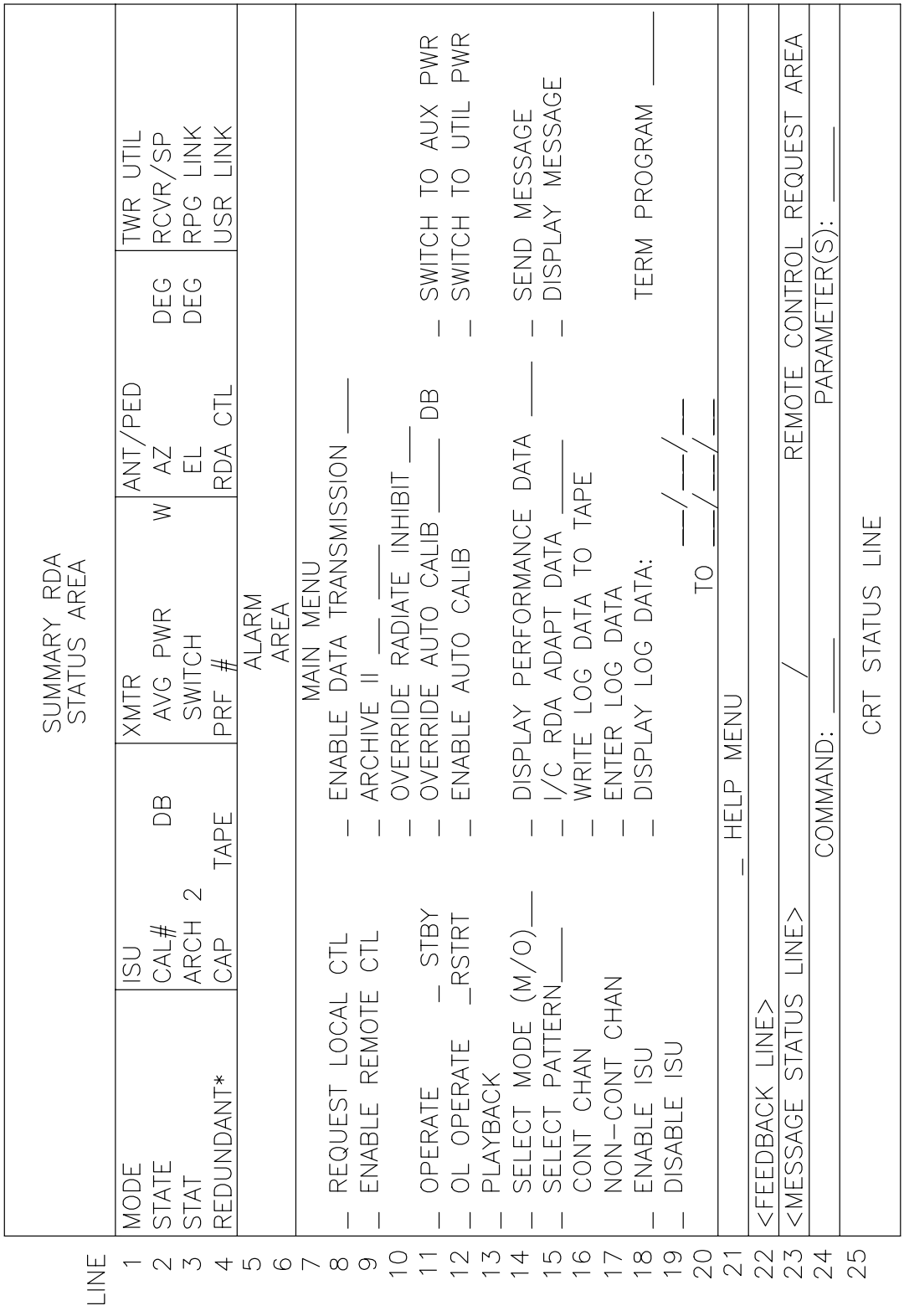


Figure 4-22. Screen Format

4-5.3 COMMANDS.

The RDA application program commands can be issued from the main menu, paging line, or command entry line (except when the adaptation data modification menus are displayed). Commands that can be issued at the command entry line are represented by an associated four-letter mnemonic. Refer to Table 4-41 for a description of the available commands. The commands and descriptions are discussed in more detail in the RDA User's Guide, NWS EHB 6-510-1.

Table 4-40. Summary RDA Status

The summary RDA status displayed at the maintenance terminal is summarized below:

| Field | Possible Values |
|---|---|
| MODE | LOC/REM/ (L/R) /MMI/RMS; OPER/MAINT |
| STATE | SHTDN/INOP/MNT MAN/MNT REQ/ON LINE |
| STAT | STUP/STBY/RSTUP/OPER/PLYBK/OLOPER; L/R; _____ (Integer) |
| REDUNDANT | C/N-C; _____ (Integer) (Redundant Channel System Only) |
| ISU | D/E; +/- _____ (Integer) (D=Disabled; E=Enabled) |
| CAL# | +/- _____ . _____ (real) DB; A/M (real is inverse when M is displayed) |
| ARCH 2 | NA/RECORD/LOADED/SEARCH/PLAYBACK/CK LABEL/FST FWD/ TAPE XFR/INST |
| CAP | _____ VOL (Integer - Archive II Capacity - estimate of scans remaining) |
| TAPE | NA/#01/#02/#03/#04/#05/#06/#07/#08/#09/#10 (Archive II Tape Count) |
| XMTR | ALRM/WARMUP/STBY/READY (ALRM and WARMUP are inverse video) |
| AVG PWR | _____ W (Integer) |
| SWITCH | ANT/DUM LD (Waveguide Switch position) |
| PRF# | - , - (one or two integers) |
| ANT/PED | OK/ALRM/ (N/C) (ALRM is inverse video) |
| AZ | _____ . _____ DEG |
| EL | _____ . _____ DEG |
| RDA CTL | OK/ALRM (ALRM is inverse video) |
| TWR UTIL | OK/ALRM (ALRM is inverse video) |
| RCVR/SP | OK/ALRM (ALRM is inverse video) |
| RPG LINK | NONE/R/V/W/FAIL/OFF (Combinations of R, V, and W are allowed; FAIL is inverse video) |
| USR LINK | NONE/R/V/W/FAIL/OFF (Combinations of R, V, and W are allowed; FAIL is inverse video) |

4-5.3.1 Command Syntax. A command issued from the command line consists of a mnemonic associated with the desired command in the command field, and perhaps an associated parameter in the parameter field. A command issued from the menu area or paging line consists of an unprotected field followed by a protected command string and possibly followed by an unprotected parameter field. While it is physically possible to select multiple commands in the menu area and on the paging line and, additionally, to issue a command from the command line, it should not be done. Unpredictable results will occur if more than one command is selected at a time. At best, only one command will be accepted and the others will be rejected. Often a command is accepted with an undesirable parameter. One means of accidentally issuing multiple commands is by using the <Space> bar in lieu of the cursor control keys. Never attempt to try to enter more than one command at a time. Commands (both the mnemonic command field and the parameter field) should contain neither preceding spaces nor imbedded spaces (for example, enter IO rather than I O). When the <Return> key is depressed, the cursor must be in a field associated with the selected command, rather than another command. The HELP command may be issued for assistance in determining command syntax.

4-5.3.2 Issuing Commands from the Command Line. With the exception of all adaptation data modification menus, commands may be issued from the command line without regard to the menu currently being displayed. If commands are issued in menu items that require input (e.g., Log Data Entry, Send Message) and all of the input requirements are not satisfied, then the work done in the menu area will be lost. If an error is detected by the terminal when it tries to interpret or execute the command, then a rejection message will be displayed on the feedback line indicating the reason for rejection and the command line's unprotected areas will be cleared with the cursor positioned at the beginning of the command mnemonics field. Perform the following steps to enter commands from the command line:

1. <Tab> cursor to command line and enter *command*.
2. <Tab> cursor to parameter section and enter *parameter* desired and then press <Return>.

**NOTE**

When <Return> key is pressed, the appropriate menu will be displayed.

4-5.3.3 Issuing Commands from the Menus. To issue a command (except adaptation data modification commands) from a menu, the main menu must be displayed. Use the <Tab> key or cursor control keys to position the cursor as needed; do not use the <Space> bar. Use of the <Space> bar selects the command over which each space passes. If incorrect entries are made on the main menu, do not attempt to correct the fields by reentering spaces over the incorrect entries, but enter MAIN at the command line to redisplay the main menu before proceeding. Perform the following steps to issue commands from a menu:

1. Enter **MAIN<Return>** on command line to display main menu if it is not already displayed.
2. If there are no associated parameters or the default parameter is to be selected, position the cursor to the left of the command on the unprotected underscore and press the **<Return>** or **<Send>** key.

3. If associated parameters need to be entered, perform the following steps:

   a. Position the cursor at the beginning of the command parameter field.

   b. Enter the desired parameter.

   c. Press **<Return>** or **<Send>** key.

**NOTE**

If the command is rejected by the terminal, a rejection message is displayed and the cursor is left where it was when the <Return> or <Send> key was pressed.

Table 4-41. RDA Maintenance Terminal Commands

| Command | Description | Parameters | Parameter Default |
|---|---|---|---|
| RELC | Message is sent to RPG requesting local control | None | |
| ENRC | Allows RPG to place RDA in remote control | None | |
| OPER | RDA operating state is set to Operate | None | |
| STBY | RDA operating state is set to Standby | None | |
| OLOP | RDA operating state is set to Offline Operate | None | |
| REST | Reinitializes the RDA program | None | |
| SELM | Places RDA in operational or maintenance mode | Maintenance, Operational | Operational |
| SELP | Selects a volume coverage pattern resident in the RDA data base for RDA control | Pattern Number | |
| ENAI | Enables the Interference Suppression Unit (ISU) | None | |
| DISI | Disables the Interference Suppression Unit (ISU) | None | |
| ENDT | Enables base data types for transmission to RPG | Reflectivity, Velocity, Spectral Width (or combinations thereof), None | All base data types enabled |
| ARCH | Starts archiving or archiving for specified number of volume coverage scans. (ARCH command is reentered to stop archiving) | Number of volume coverage scans (1 to 80 or unlimited) | Unlimited |
| PLAY | Plays back archived data | None | All data on disk |

Table 4-41. RDA Maintenance Terminal Commands (continued)

| Command | Description | Parameters | Parameter Default |
|---|---|---|---|
| OVAC | Overrides the calibration factor (SYSCAL) computed by the system with the default value (adaptation data) adjusted by the SYSCAL increment | SYSCAL increment (-10 to +10) | (Adaptation Data) |
| ENAC | Implements the calibration factor (SYSCAL) computed by the system | None | |
| DIPD | Selected performance data type is displayed | Performance data type (Antenna/Pedestal, Receiver/Signal Processor, Tower/Utilities, Wideband Communications, Transmitter, Calibration, Calibration Check, Disk File Status, Device Status, Archive II Status, Software Initialization Status) | Tower/Utilities |
| ICRA | Displays and edits (password protected) selected adaptation data types. Either the current version or the baseline version of adaptation data may be accessed with these commands | Password LOW/HIGH | None |
| | Designates whether the current version or baseline version of adaptation data will be used on the next cold startup or restart | Current, Baseline | None |
| ENLD | Enters pertinent maintenance information into a maintenance log file | Maintenance Info | N/A |
| DILD | Displays maintenance log data for a selected date or range of dates | Month, Day, Year | Most recent entry |
| WLDT | Allows operator to transfer active records in the maintenance log file from disk to magnetic tape | None | |
| STAP | Switches RDA from utility power to auxiliary power source | None | |
| STUP | Switches RDA from auxiliary power to utility power if utility power is stable | None | |

Table 4-41. RDA Maintenance Terminal Commands (continued)

| Command | Description | Parameters | Parameter Default |
|---|---|---|---|
| SENM | Allows operator to generate a free text message and send the message to the RPG and/or other users | Text, Destination (RPG, other users, both) | None |
| DISM | Allows operator to display a message received from RPG or other users when the receipt of such a message is indicated | None | |
| OVRI | Allows the operator to enable or disable the radiation inhibit override which allows the transmitter to radiate when the antenna is motionless for a period of time | Enable/Disable | Disable |
| TERP | Causes the RDA program to shut down in an orderly manner. This command is password protected. | Password | None |
| HELP | Displays information required to enter other commands | None | NA |
| MAIN | Causes main menu to be displayed | None | |
| PAGF | Causes page forwarding when more than one screen is available | None | |
| PAGB | Causes backward paging when more than one screen is available | None | |
| CONC | Causes the non-controlling channel to become the controlling channel | Password | None |
| NONC | Causes the controlling channel to become the non-controlling channel | Password | None |

4-5.4 RDA OPERATIONS/MAINTENANCE TASKS.

The RDA operations/maintenance tasks are performed at the maintenance terminal and are listed below:

- Startup
- Shutdown
- Restart
- Operational/maintenance modes selection
- Send/display messages

- Power switching
- Display/enter log data
- Status monitoring
- Archiving
- Inspect/change adaptation data
- Switching between redundant channels

4-5.4.1 Startup (STUP). When the RDA is first initialized, the RDA main menu is displayed at the maintenance terminal. The ENDT command is entered on the command line to enable data transmission to the RPG. The ENRC command is then entered to establish remote operation. Remote operation is the normal operating state of the system. Control of the RDA is exercised at the MSCF workstation.

4-5.4.2 Shutdown (SHTDN). If maintenance actions are required at the RDA, a partial or complete shutdown of the RDA may be necessary. The RELC command is entered on the command line to request and establish local control of the RDA from the RPG. When local control is established, entering the TERP command along with a password in the parameter area will cause an orderly shutdown of the application program. Control of the processor can now be performed at the system console.

4-5.4.3 Restart (REST). A restart of the application software and reinitialization of the RDASC processor may be necessary if abnormal or erratic operations exist such as not receiving summary status update information or interrupted transfer of data to the RPG. The REST command is entered on the command line to effect the operation.

4-5.4.4 Operational/Maintenance Mode Selection. The following commands are used to establish normal operating conditions, maintenance conditions, and states which aid the technician in troubleshooting: STBY, OPER, OLOP, SELM, SELP, ENAI, DISI, OVAC, ENAC, OVRI, and PLAY. Listed below are special considerations for the use of some of these commands.

4-5.4.4.1 Off-Line Operate (OLOP). The OLOP command is normally used in a redundant system for executing calibration using high voltages and for testing purposes.

4-5.4.4.2 Select Mode (SELM). The SELM command allows the operational or maintenance mode to be entered. Operator must enter the maintenance mode before selecting the maintenance volume coverage pattern (300) using the SELP command.

4-5.4.4.3 Enable Interference Suppression Unit/Disable Interference Suppression Unit (ENAI/DISI). These commands (ENAI/DISI) are tools used to determine ISU operation in removing unwanted nearby WSR-88D interference.

4-5.4.4.4 Override Radiate Inhibit (OVRI). Enabling the override (OVRI) inhibit allows high power to be radiated even though the antenna may be motionless. Enabling override inhibit should not be done.

4-5.4.5 Send/Display Messages (SENM/DISM). The commands used for sending and displaying messages are SENM and DISM. After a message is displayed, it is erased from memory.

4-5.4.6 Power Switching (STAP/STUP). The commands for switching from utility power to auxiliary power or vice versa are STAP and STUP. Caution should be exercised when using the power switching commands.

1. The system should be placed in the standby condition using the STBY command.
2. Switchover will take place when utility power is stable when switching from auxiliary power.
3. Switchover is not instantaneous; there will be a momentary loss of power when switchover takes place.

4-5.4.7 Display/Enter Log Data (DILD/ENLD). The commands associated with the display and entering of log data are DILD, ENLD, and WLDT. The DILD command is used only for the purpose of displaying log data screens for inspection. If data is to be entered, the ENLD command is used. The type of data entered is shown on Table 4-42. The WLDT command is used to store the data on tape. The database holds information for approximately 100 records. At some point, after approximately 90 records are entered, a message will appear on the terminal screen indicating that the database is almost full. If the log data is not stored on tape, then adding more records will cause older data to be erased.

4-5.4.8 Display Performance Data (DIPD) Status Monitoring. The command associated with status monitoring is DIPD. This command is used for troubleshooting purposes and for determining the status of the RDA equipment.

4-5.4.9 Archiving (ARCH). RDA sites contain an 8mm tape drive unit to perform the Archive II function. Record and playback are the main operations used by the operator to accomplish the archiving operations. The archiving tasks are described below. Table 4-43, Archive II Procedures, contains the actions necessary to use the 8mm tape drive.

1. Archiving.

   a. 8mm Tape Initialization

      The 8mm tape must be initialized before it can be used to archive data. An on-line task writes a tape label consisting of ARCHIVE2 to the beginning of the 8mm tape.

   b. 8mm Tape Mount

      The 8mm tape must be loaded before it can be used. The on-line software checks the tape label to ensure that a valid label is installed. If there is previously recorded data on the tape, a fast forward is used to get to the end of recorded tape. At this point the tape is loaded.

   c. 8mm Tape Dismount

      The 8mm tape must be dismounted before it can be physically removed from the driver. The dismount ensures that an open volume is closed before the 8mm tape is removed.

d. Open Volume

The task opens a volume by first positioning the 8mm tape to end of recorded media. A file header is then written onto the 8mm tape, and the tape is ready to record data.

e. Close Volume

The task closes a volume by writing an end-of-file mark onto the 8mm tape. The tape is ready to be dismounted.

f. Archiving

The task archives data onto the 8mm tape in 2560 byte (radial) multiple records. Alerts and dummy records can be interspersed among data records. A dummy record is an 1024 byte record. It is used to keep tension on the tape. If data is not written onto the tape within 75 seconds, the drive releases tension on the tape. Once tension is released, it takes up to 10 seconds before the drive is able to write data onto the 8mm tape thus resulting in data being lost.

g. Playback

The task reads data in 2560 byte multiple records. The returned byte count is used to determine if the data, alert, or dummy record was read. If a dummy record was read, the record is simply discarded.

2. File Header

A separate file will be used to store each volume scan. The file will consist of a file header containing filename and creation timestamp information. The data will consist of multiple variable length records. The records are either 2560 byte multiple radials, variable length alerts, or 1024 byte dummy records. A sample of a volume scan file is shown in Figure 4-23.

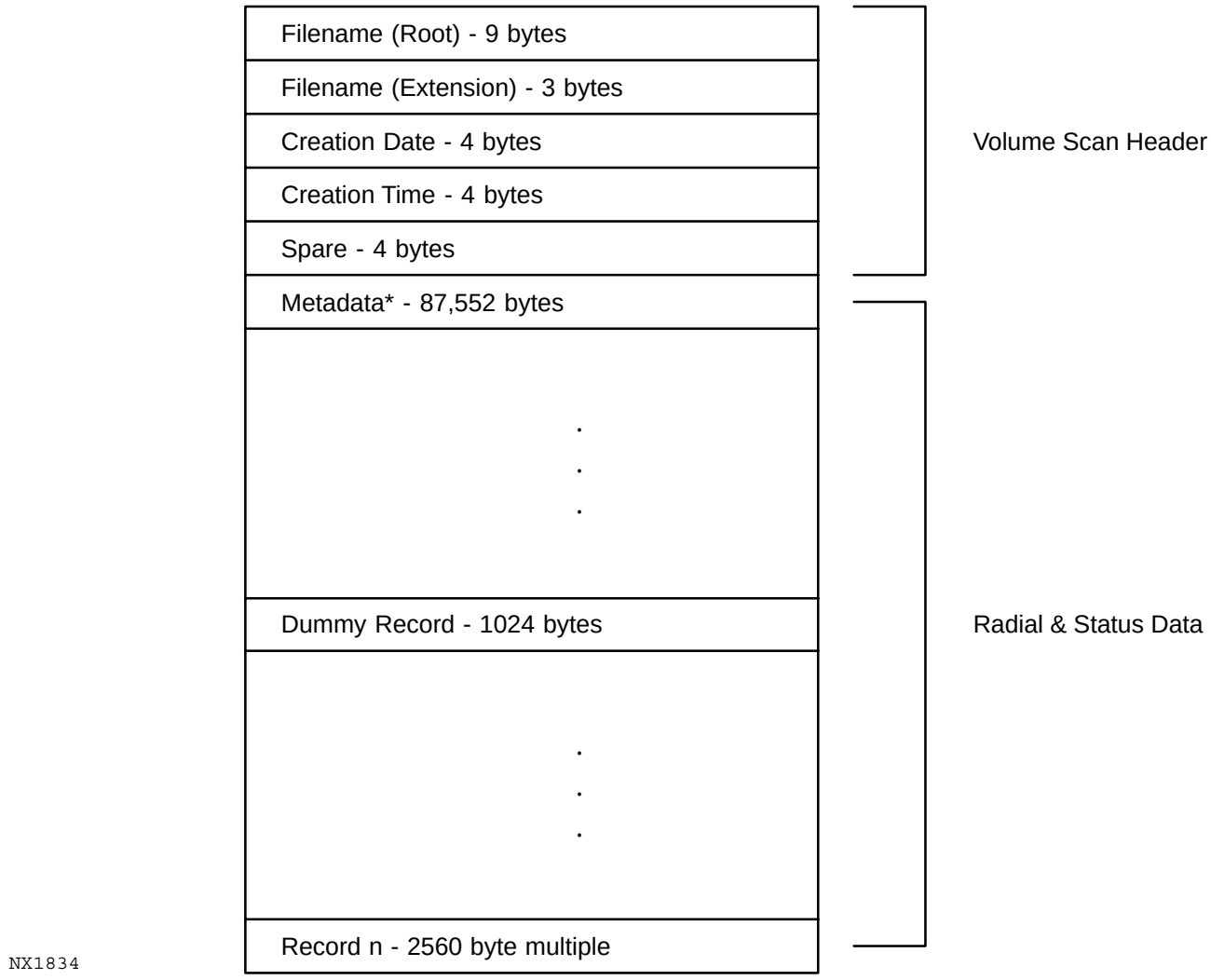


*NOTE: Metadata is meteorological and calibration data present at the time the scan was recorded.

Figure 4-23. Archive II Volume Scan File

Table 4-42. Maintenance Log Data

1. Time and date of maintenance action
2. Time and date technician notified
3. Time and data equipment maintenance action completed
4. Response priority
5. Station identifier, equipment identifier, and serial number
6. Type of maintenance action (preventive or remedial)
   a. Symptoms of failure
   b. Conditions (operating mode, environment)
7. Description of failure/corrective action
8. Cause of failure
9. Repair time (by cause)
   a. Total Time
   b. Delay time
   c. Parts not available
   d. Technician not on duty
   e. Travel
   f. Weather
   g. Other priorities
   h. Requested delay
   i. Other - Specify
10. Diagnostics run
11. For each part replaced:
   a. Part identification
   b. Part federal stock number
   c. Part serial number
   d. Part manufacturer number
   e. Card slot number and logic unit number, where applicable
   f. Whether logistics delay in securing part
   g. Disposition of part
12. Identification of maintenance personnel

Table 4-43. Archive II Procedures

| Step | Equipment | Procedure/Action | Required Response |
|---|---|---|---|
| TO LOAD ARCHIVE II DEVICE TAPE | | | |
| 1. | At the Archive II device (8mm unit) | a. Press Archive II device pushbutton | Device door will open. |
| | | b. Insert tape (top side up and in the direction of the arrow) and close door. | Tape will slide freely into Archive II device. Green light will illuminate when Archive II device is ready to archive. (ARCH II = INSTALLED) |
| TO UNLOAD ARCHIVE II DEVICE | | | |
| 1. | At the Archive II device | a. Press Archive II device pushbutton. | Archive II device will rewind, green light is extinguished and door opens. (ARCH II = INSTALLED) |
| | | b. Remove tape and write protect the tape by sliding recessed RED lever to left. | |
| TO BEGIN RECORDING FROM RDA MAINTENANCE CONSOLE | | | |
| 1. | At the Archive II device | a. Ensure tape is not write protected. RED lever should be to the right; if not, move to right. | |
| | | b. Load tape (follow appropriate procedure) | Green light on Archive II device is illuminated (ARCH II = INSTALLED) |
| 2. | At the RDA Maintenance Terminal (application program) | a. **<Tab>** to __ ARCHIVE II | Enables Archive II device and inputs number of volume scans to be archived (00-99). |
| | | b. Press **<Tab>** | |
| | | c. Enter **E** | |

- - - - -

[1] If 0 is entered for the number of volume scans, the system will archive until the tape is full or until archiving is cancelled.

Table 4-43. Archive II Procedures (continued)

| Step | Equipment | Procedure/Action | Required Response |
|---|---|---|---|
| TO BEGIN RECORDING FROM RDA MAINTENANCE CONSOLE | | | |
| 2. (cont.) | | d. Press **<Tab>** | ARCHIVE II = LOADED when directory has been created. |
| | | e. Enter ***# of Vol Scans***[1] | |
| | | f. Press **<Return>** | ARCHIVE II = RECORD when archiving. |
| | | **NOTE**<br>Archiving starts at the beginning of the next volume scan if the RDA is already in the operate state at the time the Archive command is issued. If the RDA is not in the operate state, it must be placed in the operate state in order to begin archiving. | |
| TO PLAYBACK ARCHIVING FROM RDA MAINTENANCE CONSOLE | | | |
| 1. | At the Archive II device | Load tape (follow appropriate procedure) | Green light will illuminate when Archive II device is ready. ARCH II = INSTALLED |
| 2. | At the RDA Maintenance Terminal (application program) | a. **<Tab>** to _ PLAYBACK | |
| | | b. Press **<Return>** | Activities playback session, ARCH II = LOADED, STATUS = PLYBK |
| TO DISABLE ARCHIVING FROM RDA MAINTENANCE CONSOLE | | | |
| 1. | At the RDA Maintenance Terminal (application program) | a. **<Tab>** to _ ARCHIVE II<br>b. Press **<Tab>**<br>c. Enter **D**<br>d. **<Return>** | Disables Archive II device, ARCH II = LOADED<br>After completion of volume scan status changes to: ARCH II = INSTALLED |

- - - - -

[1] If 0 is entered for the number of volume scans, the system will archive until the tape is full or until archiving is cancelled.

Table 4-43. Archive II Procedures (continued)

| Step | Equipment | Procedure/Action | Required Response |
|---|---|---|---|
| TO STOP PLAYBACK FROM RDA MAINTENANCE CONSOLE | | | |
| 1. | At the RDA Maintenance Terminal (application program) | a. **<Tab>** to _ STBY | Playback ceases ARCH II = LOADED |
| | | b. **<Return>** | ARCH II= INSTALLED |
| TO ARCHIVE (BEGIN RECORDING) FROM MSCF | | | |
| 1. | At the Archive II device | a. Ensure tape is not write protected. RED lever should be to the right; if not, move to right. | |
| | | b. Load tape (follow appropriate procedure) | Green light on Archive II device is illuminated (ARCH II = INSTALLED) |
| 2. | At the MSCF | a. Refer to NWS EHB 6-525, paragraph 4-7.2.3.4 | Activates archiving for base data collection for the # of input volume scans (0-255) ARCH II = LOADED |
| | | **NOTE**<br>Archiving starts at the beginning of the next volume scan if the RDA is already in the operate state at the time the Archive command is issued. If the RDA is not in the operate state, it must be placed in the operate state in order to begin archiving. Archive status becomes RECORD. | |
| TO PLAYBACK DATA FROM MSCF | | | |
| 1. | At Archive II device | Load tape (follow appropriate procedure) | Green light will illuminate when Archive II device is ready. ARCH II = INSTALLED. |

- - - - -

[1] If 0 is entered for the number of volume scans, the system will archive until the tape is full or until archiving is cancelled.

Table 4-43. Archive II Procedures (continued)

| Step | Equipment | Procedure/Action | Required Response |
|---|---|---|---|
| TO PLAYBACK DATA FROM MSCF | | | |
| 2. | At the MSCF | a. Refer to NWS EHB 6-526, paragraph 2-3.10.3.1.3 | Activates replay of base data archiving at beginning of input time and date<br>STATUS = PLAYBACK<br>* NOTE: All entries must be 2-digit.<br>Example: January = 01, not 1. |
| TO STOP ARCHIVING (RECORD) FROM MSCF | | | |
| 1. | At the MSCF | a. Refer to NWS EHB 6-525, paragraph 4-7.2.3.4 | Stops archiving base data ARCH II = LOADED<br><br>After completion of volume scan status changes to ARCH II = INSTALLED |
| TO STOP PLAYBACK FROM MSCF | | | |
| 1. | At the MSCF | a. Refer to NWS EHB 6-526, paragraph 2-3.10.3.1.3 | Ceases Playback<br>ARCH II = LOADED<br>ARCH II = INSTALLED |

- - - - -

[1] If 0 is entered for the number of volume scans, the system will archive until the tape is full or until archiving is cancelled.

4-5.4.10 Inspect/Change Adaptation Data (ICRA). When adaptation data parameters need to be changed (for example, replacing certain parts can affect adaptation parameters such as path loss data, attenuation settings, biasing data, etc.), use the ICRA command. See Table 4-44. The following are special considerations for changing adaptation data:

1. When ICRA command is selected without entering a password, the operator can inspect adaptation data but no changes can be made.

2. When ICRA command is selected with a low access level password, the operator can change only a restricted subset of the adaptation parameters.

3. When ICRA command is selected with a high access level password, the operator can change most of the adaptation parameters.

4. When an adaptation data parameter is selected, the current data value along with an allowable range is displayed. If the parameter is in the set allowed for editing, a new value within the allowable range may be substituted.

5. The changed adaptation parameters are not in effect immediately but may be written to disk. Two sets of adaptation data will be maintained by the program: a baseline version which will never be changed after being delivered to the site, and a current version which may be updated by those with the proper password authorization.

6. The operator can edit either the baseline or current version, but the edited version will always be written into the current version on disk (filename for current version ADAPTCUR.DAT/Ø.

7. Selection of a different version of adaptation data will not be allowed unless the proper password is entered.

8. If a maintenance action requires changing a disk, reinitializing a disk, or loading new software, reload adaptation data (ADAPTCUR.DAT/Ø) along with new software using the backup procedure in paragraph 4-3.2.1 . The following related site data files should also be reloaded:
   - RDACALIB.DAT/Ø - Calibration Data file
   - RDASTATE.DAT/Ø - State files
   - RDASTBAK.DAT/Ø - State file backup
   - LOGDATA.DTA/Ø - Maintenance Log file
   - BEGINLOG.DTA/Ø - Maintenance Log Pointer file
   - LASTLOG.DTA/Ø - Maintenance Log Pointer file
   - RDABYPAS.DAT/Ø - Clutter Bypass Bit Map file
   - RDARVCP.DAT/Ø - Remote VCP Pattern file
   - RDACLUT.DAT/Ø - Clutter Censor Zone file

Table 4-44. Change Adaptation Data (ICRA)

| Step | Action/Procedure | Indication/Response |
|---|---|---|
| | **NOTE**<br>Perform the following steps to change adaptation data. | |
| 1. | At Applications Terminal,<br>a. Enter **ICRA** on command line.<br>b. **<Tab>** cursor to parameter area and enter ***password*** **<Return>**. | <br><br>Adaptation Control Menu is displayed. |
| | **NOTE**<br>If no password is entered, only the inspection of data is allowed. | |
| 2. | At Adaptation Control Menu, enter **SF**. | Select File For Modification Menu is displayed. |
| 3. | At Select File For Modification Menu, enter one of the following:<br>• **B <Return>**<br>• **C <Return>** | <br>Selects baseline version<br>Selects current version |
| | **NOTE**<br>After selection of baseline or current version to be modified, the Adaptation Edit Control Menu is displayed. | |
| 4. | At Adaptation Edit Control Menu, enter one of the following:<br>• **T<Return>**<br>• **A<Return>**<br>• **S<Return>**<br>• **TR<Return>**<br>• **R<Return>**<br>• **W<Return>**<br>• **SO<Return>**<br>• **P<Return>** | <br>Selects Tower data for modification<br>Selects Antenna data for modification<br>Selects SPS data for modification<br>Selects Transmitter data for modification<br>Selects Receiver data for modification<br>Selects Wideband data for modification<br>Selects SOT data for modification<br>Selects password for modification |
| | **NOTE**<br>When selection of data to be modified is made, the first page of data type is displayed. Modifications can now be made and entered by line numbers. | |

Table 4-44. Change Adaptation Data (ICRA) (continued)

| Step | Action/Procedure | Indication/Response |
|---|---|---|
| 5. | At Adaptation Edit Control Menu, enter one of the following: | |
| | ' **CE <Return>** | Cancel edit, no changes are saved, and Adaptation Control Menu is displayed |
| | ' **SC <Return>** | Changes are saved and Adaptation Control Menu is displayed. |
| | ' **AC <Return>** | No changes are saved and Adaptation Control Menu is displayed. |
| | ' **M <Return>** | Exits adaptation menus. Main Menu is displayed. |
| 6. | At Adaptation Control Menu, enter **CF**. | Choose File For Next Restart Menu is displayed. |
| 7. | At Choose File For Next Restart Menu, enter one of the following: | |
| | ' **B <Return>** | Selects baseline version for next restart. |
| | ' **C <Return>** | Selects current version for next restart. |
| | **NOTE**<br>After baseline or current version of adaptation data is selected, the Adaptation Control Menu is displayed. | |
| 8. | At Adaptation Control Menu, enter **M <Return>** | Exits adaptation menus and Main Menu is displayed. |
| | **NOTE**<br>To effect operation with new adaptation data, the application program must be terminated using the TERP command and restarted using the RDAUP command. | |

4-5.4.1 1 Switching Between Redundant Channels. Redundant systems are designed so that preventive and corrective maintenance can be performed on one channel while the other channel is in normal operation. Only one channel is online at a time and there is a procedure to switch between channels. The online channel is called the controlling channel. In an FAA redundant system, a channel consists of an RDA Group and an RPG Group. In an NWS redundant system, a channel consists of an RDA Group only. Each RDA Group contains a transmitter with a klystron, receiver, and data processors. To evenly distribute the klystron aging process between channels, once per week the procedure to switch to the alternate channel should be performed even if maintenance is not required.

4-5.4.1 1.1 DELETED.

4-5.4.1 1.2 FAA Redundant Systems With MSCF Installed for UD70/170 RPG. For an FAA Redundant system, there is a Distant MSCF workstation which is located remotely from the

RDA/RPG equipment shelter and controls the selection of the channels. The narrowband communication relay box (UD31) located in the shelter connects the MSCF workstation to a router in the active channel, but since access is available to the entire FAA Redundant RPG LAN, the MSCF Wokstation has access to either RPG channel. Therefore, the MSCF workstation can be used to display an MSCF HCI from both RPG channels simultaneously. Using the MSCF HCI from the active channel, the operator can command that channel to become the non-controlling channel; subsequently, the RPG will control the relay box to connect the router from the other RPG channel to the MSCF. The procedure to switch channels remotely is Table 4-46. During maintenance activity at the equipment shelter it may be necessary to switch normal operation to the alternate channel (making it the controlling channel). This can be performed locally at the RDA Maintenance Terminals. Refer to Table 4-48. Terminals. Refer to Table 4-48.

The procedures will require issuing the CONC command from the local RDA Maintenance Terminals, UD5A4 and UD105A4. The CONC command can only be issued from a local or remote Maintenance Terminal (UD5/105A4 or UD32A1) while the RDA mode is L/R (local or remote). The RDA mode is L/R when the RDA STAT is STBY. As an example, if the equipment shelter were visited before an ENABLE LOCAL CONTROL command was issued from the MSCF, the RDA mode would be REM and the command CONC would be rejected at the local RDA Maintenance Terminal. As another example, the CONC command will not be executed when the mode of the other RDA is LOC (local control).

4-5.4.1 1.3 NWS Redundant Systems. For an NWS redundant system there is a remote RDA maintenance terminal which is located remotely from the RDA/RPG equipment shelter. A standalone dedicated modem (UD105A21) and STATMUX (UD105A20), located in the channel 1 RDA cabinet which is located in the shelter, connects the remote RDA maintenance terminal to both RDA data processors. The remote RDA maintenance terminal can command the non-controlling channel to become the controlling channel. Refer to Table 4-50 if starting at the MSCF. During maintenance activity it may be necessary to switch normal operation to the alternate channel (making it the controlling channel). This can be performed locally at the RDA maintenance terminals. Refer to Table 4-52 if starting at the MSCF.

The procedures will require issuing the CONC command from the local RDA Maintenance Terminals. The CONC command can only be issued from a local or remote Maintenance Terminal while the RDA mode is L/R (local or remote). The RDA mode is L/R when the RDA STAT is STBY. Additionally, the CONC command will not be executed when the mode of the other RDA is LOC (local control).

After switching any A/B switch, wait for the computer to repaint the screen before typing. If any keyboards lock, shut off the 0/1 power switch on the front lower right corner of the terminal and wait a full 20 seconds before restoring power. This will clear the problem.

Table 4-45 and pages 4-189 through 4-192 deleted.

Table 4-46. Switching FAA Redundant Channels Remotely from the Distant MSCF

| Step | Procedure |
|---|---|
| 1. | To switch control from Channel 1 (UD170/UD105) to Channel 2 (UD70/UD5), perform the following steps at the Distant MSCF using the HCI for Channel 1: |
| | a. At the HCI Main Menu, ensure that FAA:1 is listed as Active/Controlling in the Title Bar. Also ensure that RDA Control is set to RPG or Either. |
| | b. Click on the **Control** button in the RDA icon at the base of the tower. |
| | c. The RDA Control/Status window will appear. |
| | d. Locate the area titled RDA State, and click on **Standby**. |
| | e. Click **Yes** to confirm the change of state. |
| | f. Click on the **Close** button in the RDA Control/Status window. |
| 2. | Perform the following steps at the Distant MSCF using the HCI for Channel 2: |
| | a. At the HCI Main Menu, ensure that FAA:2 is Inactive/Non-controlling in the Title Bar. Also ensure that RDA Control is set to RPG or Either. |
| | b. Click on the **Control** button in the RDA icon at the base of the tower. |
| | c. Unlock the RDA Control/Status window by clicking on the Lock button, selecting a LOCA, entering the correct password, and pressing **<CR>**. |
| | d. Locate the area titled Redundant Control, and click on the **Controlling** button to change Channel 2 (Local Channel) to Controlling. |
| | e. Click **Yes** to confirm the change of controlling channels. |
| | f. The HCI Main Menu Title Bar shows FAA:2 is now Active/Controlling. |
| | g. Locate the area titled RDA State, and click on **Operate**. |
| | h. Click **Yes** to confirm the change of state. |
| | i. Click on the **Close** button in the RDA Control/Status window. |
| 3. | METHOD #1. To switch control from Channel 2 (UD70/UD5) to Channel 1 (UD170/UD105), perform the following steps at the Distant MSCF using the Channel 2 HCI: |
| | a. At the HCI Main Menu, ensure that FAA:2 is Active/Controlling in the Title Bar. Also ensure that RDA Control is set to RPG or Either. |
| | b. Click on the **Control** button in the RDA icon at the base of the tower. |
| | c. Unlock the RDA Control/Status window by clicking on the Lock button, selecting a LOCA, entering the correct password, and pressing **<CR>**. |
| | d. Locate the area titled RDA State, and click on **Standby**. |
| | e. Click **Yes** to confirm the change of state. |
| | f. Locate the area titled Redundant Control, and click on the **Non-controlling** button to change Channel 2 (Local Channel) to the Non-Controlling channel. |
| | g. Click **Yes** to confirm the change of controlling channels. |

Table 4-46. Switching FAA Redundant Channels Remotely from the Distant MSCF (continued)

| Step | | Procedure |
|---|---|---|
| 3. cont. | h. | The HCI Main Menu Title Bar shows FAA:2 is now Inactive/Non-controlling. |
| | i. | Click on the **Close** button in the RDA Control/Status window. |
| 4. | | Perform the following steps at the Distant MSCF using the HCI for Channel 1: |
| | a. | At the HCI Main Menu, ensure that FAA:1 is Active/Controlling in the Title Bar. Also ensure that RDA Control is set to RPG or Either. |
| | b. | Click on the **Control** button in the RDA icon at the base of the tower. |
| | c. | The RDA Control/Status window will appear. |
| | d. | Locate the area titled RDA State, and click on **Operate**. |
| | e. | Click **Yes** to confirm the change of state. |
| | f. | Click on the **Close** button in the RDA Control/Status window. |
| 5. | | METHOD #2. To switch control from Channel 2 (UD70/UD5) to Channel 1 (UD170/UD105), perform the following steps at the Distant MSCF using the Channel 2 HCI: |
| | a. | At the HCI Main Menu, ensure that FAA:2 is Active/Controlling in the Title Bar. Also ensure that RDA Control is set to RPG or Either. |
| | b. | Click on the **Control** button in the RDA icon at the base of the tower. |
| | c. | The RDA Control/Status window will appear. |
| | d. | Locate the area titled RDA State, and click on **Standby**. |
| | e. | Click **Yes** to confirm the change of state. |
| | f. | Click on the **Close** button in the RDA Control/Status window. |
| 6. | | Perform the following steps at the Distant MSCF using the HCI for Channel 1: |
| | a. | At the HCI Main Menu, ensure that FAA:1 is Inactive/Non-controlling in the Title Bar. Also ensure that RDA Control is set to RPG or Either. |
| | b. | Click on the **Control** button in the RDA icon at the base of the tower. |
| | c. | Unlock the RDA Control/Status window by clicking on the Lock button, selecting a LOCA, entering the correct password, and pressing **<CR>**. |
| | d. | Locate the area titled Redundant Control, and click on the **Controlling** button to change Channel 1 (Local Channel) to the Controlling channel. |
| | e. | Click **Yes** to confirm the change of controlling channels. |
| | f. | The HCI Main Menu Title Bar shows FAA:1 is now Active/Controlling. |
| | g. | Locate the area titled RDA State, and click on **Operate**. |
| | h. | Click **Yes** to confirm the change of state. |
| | i. | Click on the **Close** button in the RDA Control/Status window. |

Table 4-47 deleted.

Table 4-48. Switching FAA Redundant Channels Locally Starting at MSCF

| Step | Equipment/Location | Action/Procedure | Indication/Response |
|---|---|---|---|
| | | **NOTE**<br><br>The command to switch channels can only be executed from a maintenance terminal while the RDA mode is L/R (local or remote) or local. The RDA mode of the noncontrolling channel should be L/R since it's status is standby. The command to switch channels also will not be executed if the mode of the controlling channel is LOC (local control). The controlling channel should be placed to L/R before switching.<br><br>The controlling channel should be placed in standby before performing the switch to the noncontrolling channel. | |
| 1. | MSCF Workstation (UD71) | Place the controlling channel to standby by performing the following steps at the MSCF workstation: | |
| 1.a. | | Observe both HCIs on the MSCF workstation monitor to determine which channel is the Active/Controlling channel. | The active channel will display "Active/Controlling" at the top of the HCI. |
| 1.b. | | On the active channel's HCI, click the Control block in the RDA container. | The RDA Control/Status window opens. |
| 1.c. | | In the RDA Control/Status window, click Standby under the RDA State area. | A confirmation popup window will display. |
| 1.d. | | Click Yes on the confirmation popup window. | The State: field changes to "Standby". |
| 2. | MSCF Workstation | Before attempting to perform any switching at the RDA, enable local control of the controlling channel by performing the following steps at the MSCF Workstation: | |
| 2.a. | | On the active channel's HCI, click the Control block in the RDA container and observe the RDA Control: field | The RDA Control: field should indicate "Either" as long as the RDA state is Standby. |

Table 4-48. Switching FAA Redundant Channels Locally Starting at MSCF (continued)

| Step | Equipment/Location | Action/Procedure | Indication/Response |
|---|---|---|---|
| 2.b. | | Should the RDA be in Operate and the RDA Control Field: indicates "RPG", click Enable Local (RDA) in the RDA Control area to allow control at the RDA when arriving at the RDA shelter. | "Enable RDA control of RDA" noted on Feedback: line on HCI. |
| 3. | RDA (UD5) | To switch from Channel 1 (UD105) to Channel 2 (UD5) perform the following at the RDA Maintenance Terminal (UD5A4): | NOTE: If channel 1 is in Operate, it will need to be placed in a Standby condition before proceeding. |
| 3.a. | Dual A/B Switch (UD5A17) | Switch the Dual A/B Switch to the "B" position (RDA). | |
| 3.b. | RDA Maintenance Terminal for Channel 2 (UD5A4) | At the Channel 2 RDA Maintenance Terminal, press the **<Shift>** and **<Port>** keys to display the applications terminal. | Applications terminal displayed. |
| 3.c. | | Observe the applications screen. | The MODE line should read `L/R OPER`, the STAT line should read `STBY`, the REDUNDANT line should read `N-C 2`. |
| 3.d. | | Move the cursor to the COMMAND line. Enter **CONC<Tab>** ***redundant password*** **<Return>.** The redundant default password is ***PINKY.*** | Observe that the REDUNDANT line reads `C2`. Channel 2 is now the controlling channel. |
| 3.e. | | Enter **OPER<Return>** at the command line. | STAT line reads `OPER`. |
| 4. | RDA (UD105) | To switch from Channel 2 (UD5) to Channel 1 (UD105) perform the following at the RDA Maintenance Terminal (UD105A4): | NOTE: If channel 2 is in Operate, it will need to be placed in a Standby condition before proceeding. |

Table 4-48. Switching FAA Redundant Channels Locally Starting at MSCF (continued)

| Step | Equipment/Location | Action/Procedure | Indication/Response |
|---|---|---|---|
| 4.a. | A/B Switch (UD105A17) | Switch the A/B Switch to the "B" position (RDA). | |
| 4.b. | RDA Maintenance Terminal for Channel 1 (UD105A4) | At the Channel 1 RDA Maintenance Terminal press the **<Shift>** and **<Port>** keys to display the applications terminal. | Applications terminal displayed. |
| 4.c. | | Observe the applications screen. | The MODE line should read `L/R OPER.` The STAT line should read `STBY.` The REDUNDANT line should read `N-C 1.` |
| 4.d. | | Move the cursor to the COMMAND line. Type **CONC<Tab>** ***redundant password*** **<Return>.** The redundant password is ***PINKY.*** | The REDUNDANT line reads `C 1.` Channel 1 is now the controlling channel. |
| 4.e. | | Observe the STAT line. If the STAT line does not read `OPER,` enter **OPER <Return>** at the command line. | STAT line reads `OPER.` |

Table 4-49 and pages 4-199 and 4-200 deleted.

Table 4-50. Switching NWS Redundant Channels Remotely Starting at MSCF

| Step | Equipment/Location | Action/Procedure | Indication/Response |
|---|---|---|---|
| | | **NOTE**<br><br>NWS Redundant Systems are configured with a Remote RDA Maintenance Terminal (UD32) which communicates with the RDASC processor through the Dial Port Modem (UD32A4). Channel 1 or Channel 2 outputs are alternately connected to the terminal through the Dual A/B Switch (UD32A2). Before channel switching can occur from the Remote RDA Maintenance Terminal (UD32), local control must be enabled from the MSCF workstation. | |
| 1. | MSCF Workstation (UD71) | Enable local control from the MSCF workstation by performing the following steps: | |
| 1.a. | | On the HCI, click the Control block in the RDA container and observe the RDA Control: field. | The RDA Control: field should indicate “RPG” assumming the RPG is in control of the RDA. |
| 1.b. | | Click Enable Local (RDA) in the RDA Control area to allow control at the RDA. | “Enable RDA control of RDA” noted on Feedback: line on HCI. |
| 2. | Dial Port Modem (UD32A4) | The following steps verify that the Dial Port Modem is connected. | |
| 2.a. | | Observe the LED display on front of the Dial Port Modem. If the modem is not connected as indicated by “DATA 9600 T/D?” on the modem display, perform the following: | LED display reads “DATA 9600 T/D?” if the modem is connected. |
| 2.a.1. | | Press the ▶ (ACROSS) button until display reads the indicated response. | Modem display reads: “Dial From #=1.” |

Table 4-50. Switching NWS Redundant Channels Remotely Starting at MSCF (continued)

| Step | Equipment/Location | Action/Procedure | Indication/Response |
|---|---|---|---|
| 2.a.2. | | Press the (ENTER) button and observe modem LED display for indicated sequence of operating status messages. | The following sequential message display indicates the modem is connected and transmitting at 9600 bps:<br>DIALING T/D?<br>DISCONNECT T/D?<br>OFFHOOK T/D?<br>RANGING T/D?<br>TRAINING T/D?<br>DATA 9600 T/D? |
| **NOTE**<br>Perform step 3 to switch from Channel 1 to Channel 2. Perform step 4 to switch from Channel 2 to Channel 1. Before transferring control from one channel to another, both channels should be in Standby (STBY). The channel which is taking control can be in either LOCAL or L/R. The channel from which control is being taken must be in L/R. Putting a channel in L/R can be accomplished by performing an Enable Remote Control (ENRC) while the channel is in STBY. If attempted while the channel is in OPER the channel will go to REM OPER and control of the channel from the Remote RDA Maintenance Terminal will be lost until control is once again enabled at the MSCF Workstation. | | | |
| 3. | Remote RDA Maintenance Terminal (UD32) | To switch from Channel 1 (UD105) to Channel 2 (UD5) perform the following at the remote RDA Maintenance Terminal (UD32): | |
| 3.a. | Dual A/B Switch (UD32A2) | Switch the Dual A/B Switch to the “A” position (Channel 1). | |
| 3.b. | Remote RDA Maintenance Terminal (UD32) | Verify that the Applications Terminal is displayed. If not, press the **<Shift>** and **<Port>** keys **simultaneously.** | Applications terminal is displayed. |
| 3.c. | | Press **<F1>** to display the Main Menu if not already displayed. | Main Menu is displayed. |

Table 4-50. Switching NWS Redundant Channels Remotely Starting at MSCF (continued)

| Step | Equipment/Location | Action/Procedure | Indication/Response |
|---|---|---|---|
| 3.d. | | Ensure Channel 1 is the controlling channel by checking the REDUNDANT line. | The REDUNDANT line should read `C1`. If not, there is no need to perform the switch since Channel 2 is already the controlling channel. |
| 3.e. | | Observe the applications screen. | The MODE line must read `LOC OPER` or `L/R OPER` to switch channels. If the MODE line shows `MODE REM OPER` local control has not been established and steps 3.f. and must be performed. Otherwise, skip to step 3.h. |
| 3.f. | | Enter **RELC<Return>** at the command line to enable local control if not already accomplished. If the command is not accepted, reaccomplish step 1 at the MSCF workstation. | Response should be `RELC ACCEPTED`. |
| 3.g. | | Observe the MODE line for the indicated response. | MODE line reads `LOC OPER` or `L/R OPER`. |
| 3.h. | | Ensure Channel 1 is in Standby by checking the STAT line for the indicated response. If Channel 1 does not read `STBY`, enter **STBY<Return>** at the command line. | STAT line reads `STBY`. |
| 3.i. | | If the MODE line read `LOC OPER` in the previous steps, enter **ENRC<Return>** at the command line. | MODE line should now read `L/R OPER`. |
| 3.j. | Dual A/B Switch (UD32A2) | Switch the Dual A/B Switch to the “B” position (Channel 2). | |

Table 4-50. Switching NWS Redundant Channels Remotely Starting at MSCF (continued)

| Step | Equipment/Location | Action/Procedure | Indication/Response |
|---|---|---|---|
| 3.k. | Remote RDA Maintenance Terminal (UD32) | Verify that the Applications Terminal is displayed. If not, press the **<Shift>** and **<Port>** keys **simultaneously.** | Applications terminal is displayed. |
| 3.l. | | Press **<F1>** to display the Main Menu if not already displayed. | Main Menu is displayed. |
| 3.m. | | Observe the MODE line. | MODE line reads `LOC OPER` or `L/R OPER`. If not, perform the next step. |
| 3.n. | | Enter **RELC<Return>** at the command line to establish local control if not already accomplished. | Response should be `RELC ACCEPTED` and the MODE should switch to `L/R OPER`. |
| 3.o. | | Observe the screen for the indicated conditions. | STAT line reads `STBY` and the REDUNDANT line reads `N- C 2` (Channel 2 is in Standby and is not the controlling channel). |
| 3.p. | | Move the cursor to the COMMAND line. Type **CONC<Tab>** ***redundant password*** **<Return>.** The redundant default password is ***PINKY.*** | The REDUNDANT line changes to read `C 2`. (Channel 2 is now the controlling channel.) |
| 3.q. | | Enter **OPER<Return>** at the command line. | STAT line reads `OPER`. |
| 3.r. | | Enter **ENRC<Return>** at the command line. | Mode line reads `REM OPER` |
| 3.s. | Dial Port Modem (UD32A4) | To disconnect modem, press the ◎ (ENTER) button and observe display. | LED display reads "DISCONNECT T/D?" |
| 4. | Remote RDA Maintenance Terminal (UD32) | To switch from Channel 2 (UD5) to Channel 1(UD105) perform the following at the remote RDA Maintenance Terminal (UD32): | |

Table 4-50. Switching NWS Redundant Channels Remotely Starting at MSCF (continued)

| Step | Equipment/Location | Action/Procedure | Indication/Response |
|---|---|---|---|
| 4.a. | Dual A/B Switch (UD32A2) | Switch the Dual A/B Switch to the "B" position (Channel 2). | |
| 4.b. | Remote RDA Maintenance Terminal (UD32) | Verify that the Applications Terminal is displayed. If not, press the **<Shift>** and **<Port>** keys **simultaneously.** | Applications terminal is displayed. |
| 4.c. | | Press **<F1>** to display the Main Menu if not already displayed. | Main Menu is displayed. |
| 4.d. | | Ensure Channel 2 is the controlling channel by checking the REDUNDANT line. | The REDUNDANT line should read `C2`. If not, there is no need to perform the switch since Channel 1 is already the controlling channel. |
| 4.e. | | Observe the applications screen. | The MODE line must read `LOC OPER` or `L/R OPER` to switch channels. If the MODE line shows `MODE REM OPER` local control has not been established and steps 4.f. and 4.g. must be performed. Otherwise, skip to step 4.h. |
| 4.f. | | Enter **RELC<Return>** at the command line to enable local control if not already accomplished. If the command is not accepted, reaccomplish step 1 at the MSCF workstation. | Response should be `RELC ACCEPTED`. |
| 4.g. | | Observe the MODE line for the indicated response. | MODE line reads `LOC OPER` or `L/R OPER` |

Table 4-50. Switching NWS Redundant Channels Remotely Starting at MSCF (continued)

| Step | Equipment/Location | Action/Procedure | Indication/Response |
|---|---|---|---|
| 4.h. | | Ensure Channel 2 is in Standby by checking the STAT line for the indicated response. If Channel 2 does not read `STBY`, enter **STBY<Return>** at the command line. | STAT line reads `STBY`. |
| 4.i. | | If the MODE line reads `LOC OPER` in the previous steps, enter **ENRC<Return>** at the command line. | MODE line should now read `L/R OPER`. |
| 4.j. | Dual A/B Switch (UD32A2) | Switch the Dual A/B Switch to the "A" position (Channel 1). | |
| 4.k. | Remote RDA Maintenance Terminal (UD32) | Verify that the Applications Terminal is displayed. If not, press the **<Shift>** and **<Port>** keys **simultaneously.** | Applications terminal is displayed. |
| 4.l. | | Press **<F1>** to display the Main Menu if not already displayed. | Main Menu is displayed. |
| 4.m. | | Observe the MODE line. | MODE line reads `LOC OPER` or `L/R OPER`. If not, perform the next step. |
| 4.n. | | Enter **RELC<Return>** at the command line to establish local control if not already accomplished. | Response should be `RELC ACCEPTED` and the MODE should switch to `L/R OPER`. |
| 4.o. | | Observe the screen for the indicated conditions. | STAT line reads `STBY` and the REDUNDANT line reads `N- C 1` (Channel 1 is in Standby and is not the controlling channel). |
| 4.p. | | Move the cursor to the COMMAND line. Type **CONC<Tab>** ***redundant password*** **<Return>.** The redundant default password is ***PINKY.*** | The REDUNDANT line changes to read `C 1`. (Channel 1 is now the controlling channel.) |

Table 4-50. Switching NWS Redundant Channels Remotely Starting at MSCF (continued)

| Step | Equipment/Location | Action/Procedure | Indication/Response |
|---|---|---|---|
| 4.q. | | Observe that the STAT line now reads `OPER`. If not, enter **OPER<Return>** at the command line. | STAT line reads `OPER"`. |
| 4.r. | | Enter **ENRC<Return>** at the command line. | Mode line reads `REM OPER`. |
| 4.s. | Dial Port Modem (UD32A4) | To disconnect modem, press the ◎ (ENTER) button and observe display. | LED display reads "DISCONNECT T/D?" |

Table 4-51 deleted.

Table 4-52. Switching NWS Redundant Channels Locally Starting at MSCF

| Step | Equipment/Location | Action/Procedure | Indication/Response |
|---|---|---|---|
| **NOTE**<br><br>Perform step 2 to switch from Channel 1 to Channel 2. Perform step 3 to switch from Channel 2 to Channel 1. Before transferring control from one channel to another, both channels should be in Standby (STBY). The channel which is taking control can be in either LOCAL or L/R. The channel from which control is being taken must be in L/R. Putting a channel in L/R can be accomplished by performing an Enable Remote Control (ENRC) while the channel is in STBY. If attempted while the channel is in OPER the channel will go to REM OPER and control of the channel from the RDA Maintenance Terminal will be lost until control is once again enabled from the MSCF workstation. | | | |
| 1. | MSCF Workstation (UD71) | Enable local control from the MSCF workstation by performing the following steps: | |
| 1.a. | | On the HCI, click the Control block in the RDA container and observe the RDA Control: field. | The RDA Control: field should indicate “RPG” assumming the RPG is in control of the RDA. |
| 1.b. | | Click Enable Local (RDA) in the RDA Control area to allow control at the RDA. | “Enable RDA control of RDA” noted on Feedback: line on HCI. |
| 2. | RDA Maintenance Terminal (UD5A38) | To switch from Channel 1 (UD105) to Channel 2 (UD5) perform the following at the RDA Maintenance Terminal: | |
| 2.a. | Dual A/B Switch (UD5A17) | Switch the Dual A/B Switch to the “A” position (local). | |
| 2.b. | RDA Maintenance Terminal for Channel 2 (UD5A38) | At the Channel 2 RDA Maintenance Terminal, verify the applications terminal is displayed. If not, press the **<Shift>** and **<Port>** keys **simultaneously**. | Applications terminal is displayed. |

Table 4-52. Switching NWS Redundant Channels Locally Starting at MSCF (continued)

| Step | Equipment/Location | Action/Procedure | Indication/Response |
|---|---|---|---|
| 2.c. | | Press **<F1>** to display the Main Menu if not already displayed. | Main Menu is displayed. |
| 2.d. | | Observe the applications screen. | The STAT line should read `STBY.` The REDUNDANT line should read `N-C 2.` If the REDUNDANT line reads `C 2` then there is no need to perform the switch since Channel 2 is already the controlling channel. The MODE line must read `LOCAL` or `L/R.` If not, perform step 2e. |
| 2.e. | | Enter **RELC<Return>** at the command line to enable local control. If the command is not accepted, reaccomplish step 1 at the MSCF workstation. | Response should be `RELC ACCEPTED.` MODE line now reads `LOC OPER` or `L/R OPER.` |
| 2.f. | | Move the cursor to the COMMAND line. Type **CONC<Tab>** ***redundant password*** **<Return>.** The redundant default password is ***PINKY***. | Observe that the REDUNDANT line changes to `C 2.` Channel 2 is now the controlling channel. |
| 2.g. | | Observe the STAT line. If the STAT line does not read `OPER,` enter **OPER<Return>** at the command line. | STAT line reads `OPER.` |
| 2.h. | | If the MODE line reads `LOC OPER` or `L/R OPER,` enter **ENRC<Return>** at the command line. | MODE line reads `REM OPER.` |
| 2.i. | Dual A/B Switch (UD5A17) | Switch the Dual A/B Switch to the “B” position (remote). | |

Table 4-52. Switching NWS Redundant Channels Locally Starting at MSCF (continued)

| Step | Equipment/Location | Action/Procedure | Indication/Response |
|---|---|---|---|
| 3. | RDA Maintenance Terminal (UD105A38) | To switch from Channel 2 (UD5) to Channel 1 (UD105) perform the following at the RDA Maintenance Terminal: | |
| 3.a. | Dual A/B Switch (UD105A17) | Switch the Dual A/B Switch to the "A" position (local). | |
| 3.b. | RDA Maintenance Terminal for Channel 1 (UD105A38) | At the Channel 1 RDA Maintenance Terminal, verify the Applications Terminal is displayed. If not, press the **<Shift>** and **<Port>** keys **simultaneously**. | Applications terminal is displayed. |
| 3.c. | | Press **<F1>** to display the Main Menu if not already displayed. | Main Menu displayed. |
| 3.d. | | Observe the applications screen. | The STAT line should read `STBY.` The REDUNDANT line should read `N-C 1.` If the REDUNDANT line reads `C 1` then there is no need to perform the switch since Channel 1 is already the controlling channel. |
| 3.e. | | Enter **RELC<Return>** at the command line to enable local control. If the command is not accepted, reaccomplish step 1 at the MSCF workstation. | Response should be `RELC ACCEPTED.` MODE line now reads `LOC OPER` or `L/R OPER.` |
| 3.f. | RDA Maintenance Terminal for Channel 1 (UD105A38) | Move the cursor to the COMMAND line. Type **CONC<Tab>** ***redundant password*** **<Return>.** The redundant default password is ***PINKY.*** | The REDUNDANT line changes to `C 1.` Channel 1 is now the controlling channel. |

Table 4-52. Switching NWS Redundant Channels Locally Starting at MSCF (continued)

| Step | Equipment/Location | Action/Procedure | Indication/Response |
|---|---|---|---|
| 3.g. | | Observe the STAT line. If the STAT line does not read `OPER`, enter **OPER<Return>** at the command line. | STAT line reads `OPER`. |
| 3.h. | | If the MODE line reads `LOC OPER` or `L/R OPER`, enter **ENRC<Return>** at the command line. | MODE line reads `REM OPER`. |
| 3.i. | Dual A/B Switch (UD105A17) | Switch the Dual A/B Switch to the "B" position (remote). | |

Pages 4-213 through 4-220 deleted.

4-5.5 RDA OPERATIONAL STATES.

There are three RDA operational states: operate, standby, and off-line. The operational state place the RDA equipment in the specific conditions listed below:

1. Operate State
   - RDA operational state is set to operate
   - Transmitter high voltage is set to ON
   - Hardware monitoring function is operational
   - Volume coverage control function is initiated and provides automatic RDA calibrations
   - RDA data function is initiated and base data is formed
   - Wideband function is initiated for transmitting base data to the RPG and to receive commands from the RPG.

2. Standby State
   - RDA operational state is set to standby
   - Transmitter high voltage is set to OFF
   - The pedestal is set to the pedestal park position and servo power is turned off
   - Hardware monitoring function is operational
   - Wideband function is initiated for status and control but base data is not transmitted to the RPG.

3. Off-Line State
   - RDA operational state is set to off-line operate
   - Transmitter high voltage is set to ON but RF is sent to dummy load
   - The pedestal is set to the pedestal park position and servo power is turned off
   - Wideband function is initiated.

4-5.6 RDA CONTROL.

Operational control of the RDA is performed at the maintenance terminal using the commands in Table 4-53. Table 4-53 specifies the available control commands when the RDA is under local or remote control. Remote control pertains to an RDA controlled by its associated RPG; local control pertains to an RDA for which remote control by its associated RPG has not been enabled. NWS redundant systems contain a Remote RDA Maintenance Terminal UD32 located next to the MSCF workstation. All RDA control commands can be performed from that location as well as the RDA (Local) Maintenance Terminal.

Table 4-53. RDA Control Commands

| Command | Local Control | Remote Control |
|---|---|---|
| Request Local Control | | X |
| Enable Remote Control | X | |
| Operate | X | |
| Off-line Operate | X | |
| Standby | X | |
| Restart | X | |
| Select Mode | X | |
| Select Local Volume Coverage Pattern | X | |
| Enable Auto Calibration | X | |
| Override Automatic Calibration | X | |
| Enable ISU | X | |
| Disable ISU | X | |
| Override Radiate Inhibit | X | |
| Enable Data Transmission | X | |
| Enable/Disable Archive II Recording | X | |
| Playback | X | |
| Display Performance Data | X | X |
| Inspect/Change RDA Adaptation Data | X | X |
| Enter Log Data | X | X |
| Display Log Data | X | X |
| Switch to Auxiliary Power | X | |
| Switch to Utility Power | X | |
| Generate and Send Message (from RDA) | X | X |
| Display Message (at RDA) | X | X |
| Terminate Program | X | |
| Change non-controlling channel into controlling channel | X | X |
| Change controlling channel into non-controlling channel | X | X |

# Section 4-6. RDA M3200 Processor Diagnostic Operations

## 4-6.1 INTRODUCTION.

This section contains the functional descriptions for the RDA M3200 processor diagnostic tests and the procedures for running each test. The tests are performed off-line to demonstrate that the M3200 processor is running properly. The test procedures in this section are also used for training purposes to assist personnel to become familiar with running diagnostic tests. The test procedures are not to be used out of context as fault isolation tools.

**NOTE**

This section refers to the RDADP as UD5, the Receiver as UD4, the Transmitter as UD3, and the Waveguide Pressurization Unit as UD6. Unless otherwise specified, the information also applies to redundant systems UD105, UD104, UD103, and UD106.

## 4-6.2 RDA GROUP DIAGNOSTIC PROGRAMS.

The diagnostic programs are packaged on a SCSI streaming tape. The tape is accompanied by a listing of the sequence number and description of the various diagnostics contained on the tape. The M3200 processor diagnostic programs, along with their test numbers, description (shown in parentheses), and run lines are listed as follows:

- *VMEbus to Concurrent I/O Bus Interface Diagnostic. This diagnostic is not on the diagnostic tape, but is internal to the VCI-C board.
- 06-127 Common RS-232 Interface Off-Line Test Program (5 min.)
- 06-145 Diagnostic Loader/Executive (Low Loader/Executive or High Loader/Executive) (N/A)
- 06-290 Programmable Signal Processor Interface (PSPI) Board Test (PSPI Test) (10 min.)
- 06-297 Intelligent Peripheral Controller (IPC) Diagnostic (IPC Diagnostic) (10 min.)
- 06-319 M3200 CPU Diagnostic (Micro 3200 CPU Diagnostic) (10 min.)
- 06-321 M3200 Cache Diagnostic (Micro 3200 Cache Diagnostic) (30 min.)
- 06-325 Composite Memory Module (CMM) Diagnostic (CMM/EMM/ICMM Diag. Pt 1 or Pt 2) (50 min.)
- 91-424 BTC - 501/504 Diagnostic
- 91-539 Optical Disk System Diagnostic (Optical Disk Test) (5 min.)

4-6.3 RDA M3200 PROCESSOR DIAGNOSTIC FUNCTIONAL DESCRIPTION.

4-6.3.1 VMEbus to Concurrent I/O Bus Interface Diagnostic. This diagnostic consists of 20 tests. Tests 0 through 7, 18, and 19 are used in the NEXRAD system and tests 8 through 17 are not used.

| Test | Description |
|---|---|
| Test 00 | Status Check - Checks the initial status of the VCI-C. An error is displayed if the status is not zero. |
| Test 01 | Single Location RAM Test Y′1ØØ1ØØØØ′ - A walking one and a walking zero bit test is performed on location Y′1ØØ1ØØØØ′. |
| Test 02 | RAM Test from Y′1ØØ1ØØØØ′ to Y′1ØØ17FFF′ - A Write/Read/Verify is performed on the RAM region from Y′1ØØ1ØØØØ′ to Y′1ØØ17FFF′. The PATtern option determines the test pattern. If other tests are run in addition to Test 02, all PATtern values will be exercised. |
| Test 03 | Power-Up Self-Test Display from VCI-C - This test displays the result of the 68030 power-on test. |
| Test 04 | Interrupt to the 68030 - The 68030 is interrupted with values of X′8ØØØ′ and X′81ØØ′ to X′FFØØ′. |
| Test 05 | Interrupt from the 68030 - The test causes the 68030 to generate interrupts in the sequence X′ØØØ1′, X′ØØØ2′, X′ØØØ4′, …, X′2ØØØ′, X′4ØØØ′. |
| Test 06 | EDMA Access - The 68030 can access the memory of the local CPU via a handshake. The first part of the test exercises the EDMA READ by filling the output buffer with a pattern and reading it through the VCI-C and placing the result in the input buffer. The data is compared after each part of the test. |
| Test 07 | VCI-V Data Register Test - A walking one and a walking zero bit test is performed on location Y′6ØØØØ1ØØ′ in the 68030 CPU address space. |
| Tests 08-17 | Not used in NEXRAD system. |
| Test 18 | Extended Diagnostic Interrupt from the MUXbus to the VMEbus - The VCI-C is temporarily reconfigured to disable interrupts on all levels. The VME147 is then signaled that an interrupt will be sent from the Concurrent CPU. The VME147 signals the interrupt that it received, and the interrupt received is compared to the interrupt sent. When all interrupt levels are tested, the VCI-C is configured to its original configuration. |
| Test 19 | POKE-PEEK Scope Loop using T19MODE - This test repetitively accesses the VCI-C. The T19MODE option specifies the type of access. The SCOPE option specifies the type of transfer. The LOw option specifies the address of the transfer. |

4-6.3.2 Common RS-232 Interface Off-Line Test Program (06-127). This program tests all available features of the various programmable RS-232 interfaces, such as the communications multiplexers (COM MUX), the programmable asynchronous line system (PALS), and the programmable asynchronous single line adapter (PASLA), using two adjacent lines in place of the

switched telephone network. Every combination of character format (character size, bit speed, etc.) is tested. The program operates in the half-duplex (HDX) or full-duplex (FDX) mode. The clock and bit configuration is selected for appropriate tests. This program assumes that the appropriate processor, memory, and terminal test have been run without detecting an error. The test program checks the following functions:

- False sync test
- Test input lines from data set
- Test output lines to data set
- Test disable interrupt function
- Test queuing of interrupts
- Test hardware disarm function
- Test interrupt sources
- Receive message interrupt mode
- Receive message status mode
- Transmit message interrupt mode
- Transmit message status mode
- Test transmit line break function
- Test fault detection; parity error, framing error, overflow
- Test echoplex (EPX) function
- Test turn line to receive while transmitting character

4-6.3.3 Diagnostic/Loader Executive, On-Line/Standalone (06-145). This program is used to load and execute all diagnostic test programs and must be accomplished prior to executing a diagnostic. During the initial load procedure, an initial entry of FILEMARKS = Ø will load the Low Loader Executive. The load command entry **LO *Sequence No*.;ST <Return>** will load diagnostic tests.

4-6.3.4 Programmable Signal Processor Interface (PSPI) Board Test (06-290).

The PSPI board can be tested by using the PSPI Diagnostic (06-290).

The PSPI diagnostic verifies the proper operation of the PSPI through four tests that exercises half-word data transfers, output commands, status requests, the interrupt mechanism and the SELCH protocols. The cables connected to CONN4 and CONN2 of the PSPI boards must be disconnected.

4-6.3.5 Intelligent Peripheral Controller (IPC) Diagnostic (06-297). This diagnostic tests the proper operation of the Concurrent Computer Corporation (CCC) selector channel (SELCH), the

optical disk controller (ODC), and the peripherals that they control, i.e.; the SCSI tape drive or the SCSI disk drive. In this diagnostic, the SELCH, ODC, and the SCSI device are exercised by transferring data patterns to and from memory. The test patterns are written to and then read from the SCSI device. A scratch SCSI tape cartridge is used in running this diagnostic. This diagnostic should not be run on the SCSI disk drive, because the test patterns would overwrite and destroy the operating system. If an error is detected during the diagnostic, an error message will be displayed on the RDA system console. An error message would indicate a failure of either the SELCH, ODC, or SCSI tape drive. This diagnostic may also be used to format the SCSI disk drive.

4-6.3.6 M3200 CPU Diagnostic (06-319). This diagnostic consists of 49 subtests (0 through 48) which verify proper operation of the processor and S-bus interface contained on the M3200 board; the test descriptions are as follows:

| Test | Description |
|---|---|
| Subtest 0 | Basic confidence test and program executive (not listed) |
| Subtest 1 | EPSR, regular branches, load/store confidence |
| Subtest 2 | Byte operations |
| Subtest 3 | Load Program STATUS word - - LPSW and LPSWR |
| Subtest 4 | Add and Subtract Immediate (AIS and SIS) |
| Subtest 5 | Usual branches |
| Subtest 6 | SRTC, RRTC, LTCR, STCR, and pipeline |
| Subtest 7 | Load multiple and store multiple |
| Subtest 8 | Logical shifts |
| Subtest 9 | Boolean operations |
| Subtest 10 | Logical and arithmetic compares |
| Subtest 11 | CHVR and EXHR |
| Subtest 12 | Arithmetic shifts |
| Subtest 13 | Add and subtract |
| Subtest 14 | BSYNC and RX1, RX2, RX3 addressing modes |
| Subtest 15 | Multiply |
| Subtest 16 | Division |
| Subtest 17 | General register sets |
| Subtest 18 | Supervisor call (SVC) |
| Subtest 19 | Illegal instructions |
| Subtest 20 | Single-precision floating-point registers |
| Subtest 21 | Double-precision floating-point registers |
| Subtest 22 | Scratchpad registers |
| | Load and Store Process States |
| | Register Interference Tests |
| Subtest 23 | WSR and RSR |

| Test | Description |
|---|---|
| Subtest 24 | Branch on Index (BXLE and BXH) |
| Subtest 25 | Branch on count (BCD and BCDBS) |
| Subtest 26 | List instructions |
| Subtest 27 | Bit operations |
| Subtest 28 | Simulate interrupt |
| Subtest 29 | Translate (TLATE) |
| Subtest 30 | Cyclic redundancy check |
| Subtest 31 | Simulate channel program (SCP) |
| Subtest 32 | Single-precision floating-point operations |
| Subtest 33 | Double-precision floating-point operations |
| Subtest 34 | Single-precision math operations |
| Subtest 35 | Double-precision math operations |
| Subtest 36 | Alignment faults and queue service |
| Subtest 37 | Load real address (LRA) |
| Subtest 38 | Load real address block (LRAB) |
| Subtest 39 | Process byte (PB and PBR) |
| Subtest 40 | CDS Read and CDS write |
| Subtest 41 | XSTF and memory error logger |
| Subtest 42 | Commercial instructions set |
| Subtest 43 | Privileged instructions |
| Subtest 44 | Precision interval clock |
| Subtest 45 | Programmed I/O (Console) |
| Subtest 46 | I/O Interrupts (Console) |
| Subtest 47 | Auto-driver channel |
| Subtest 48 | Power-fail and restore |

For additional information, refer to the applicable COTs manual.

4-6.3.7 M3200 Cache Diagnostic (06-321). The cache diagnostic verifies and exercises the integrity of the cache. Ten subtests (0-9) exist and are described as follows:

| Test | Description |
|---|---|
| Subtest 0 | TCR force instruction cache “Flush, Hit” Test |
| Subtest 1 | Instruction cache - All “CACHE hits” Timing Test |
| Subtest 2 | Instruction cache - All “CACHE misses” Timing Test |
| Subtest 3 | Instruction cache - Pattern Sensitive Fault Test |
| Subtest 4 | TCR force data cache “Flush, Miss, Hit” Test |
| Subtest 5 | Data cache-Stuck-at Fault Test |
| Subtest 6 | Data cache - “CACHE hits” Timing and Memory Test |
| Subtest 7 | Data cache - “CACHE miss” Timing Test |
| Subtest 8 | Data cache - Capacitance Build Up Test |
| Subtest 9 | Data cache - Tag LRU |

4-6.3.8 Composite Memory Module (CMM) Diagnostic (06-325). The CMM test diagnostic consists of two functional variations of the Test Program; F01 and F02. This test program interfaces with the Control/Diagnostic System (CDS) for configuration information. The F01 variation of the test program resides in low memory below 256k. This program tests all of the memory above itself. The F02 variation of the test program resides in high memory above 256k. This program tests all memory below itself. Each variation of the CMM test is identical, except for their memory location and what area of memory is tested. Each variation consists of 13 subtests, 0 through 12. Tests 0 through 6 are the default subtests and tests 7 through 12 are optional. The following is a description of subtests 0 through 12. For a complete description of the subtests and the test program, see the run time manual contained within the program.

| Subtest | Description |
|---|---|
| Subtest 0 | Lists the limits of memory under test |
| Subtest 1 | Sets and resets each memory bit in the test area |
| Subtest 2 | Writes three data patterns in the test area and complements them |
| Subtest 3 | Marches 1 through a field of 0s and marches 0 through a field of 1s |
| Subtest 4 | Double column disturb test |
| Subtest 5 | Short count relocatable hammer disturb |
| Subtest 6 | Diagonal Galpat test |
| Subtest 7 | Power fail memory refresh hold test |
| Subtest 8 | Long count relocatable hammer disturb test |
| Subtest 9 | Error Check and Correction (ECC) disturb test |
| Subtest 10 | Single bit error logger test |
| Subtest 11 | Double bit error logger test |
| Subtest 12 | Error scrubbing test |

4-6.3.9 Optical Disk System Diagnostic (91-539). This test is stored on the optical disk diagnostic tape and is used interactively on the RDA system console. The test also requires use of the optical disk (94-788) which contains data to be read by the optical disk drive. This diagnostic tests the optical disk system, i.e., optical disk controller (ODC), optical disk, and the SELCH. Tests 0-3, 5, and 7-13 are briefly described as follows:

| Test | Description |
|---|---|
| Test 0 | The optical disk controllers on-board self-test is started. After completion of the self-test, the test then exercises the SELCH start and final address registers using various worst case data patterns. For each start address written, the final address is read back and compared to the address written. The drive is required to be spun up for this test. The diagnostic waits for the operator to spin up the drive. |
| | **NOTE**<br>Tests 1 through 10 issue the self-test diagnostics to the optical disk drive. Tests 1 through 10 require the drive to be spun down. |
| Test 1 | Starts the drive's self-tests. Optical controller diagnostic tests 00-03 are executed to test the drive's controller. Then the drive's error detection and correction (EDAC) logic is tested with EDAC test codes 00-01. Next, the optical disk drive interface diagnostic test code 10 is executed. |
| Test 2 | Exercises the drive control, spindle control, coarse positioner, laser control, read channel, and focus and tracking logic on the optical drive (Code 20). |
| Test 3 | Exercises the internal operation of the optical drive (Code 30). |
| Test 5 | The spindle motor is spun up to speed and the speed is verified (Code 50). |
| Test 7 | All of the laser status lines are checked with the disk spinning and the laser enabled outside of the user data area (Code 70). |
| Test 8 | The read amplifier self-test is started on the optical drive (Code 80). |
| Test 9 | The focus and tracking self-test of the optical drive are executed (Code 90). |
| Test 10 | The drive system self-test is executed on the optical disk drive (Code A0). |
| | **NOTE**<br>Tests 11 through 14 require the drive to be spun up. |
| Test 11 | This test performs a variety of seeks from LBA ØØØØØØ to LBA ØF423F. A correct seek is verified by an LBA header read. |
| Test 12 | This test reads known data patterns on the disk and certifies the data is correct. Interrupts not used. |
| Test 13 | This test performs a write operation to the media. The data is then read back and compared with the data written. Interrupts are not used. |

4-6.4 RDA M3200 PROCESSOR DIAGNOSTIC PROCEDURES.

Loading and running the RDA M3200 processor diagnostics require that the processor be initialized and the Diagnostic Executive program (06-145) be loaded prior to executing any other test program. Perform the procedure in paragraph 4-6.4.1 to initialize the processor and load the Diagnostic Executive.

4-6.4.1 Initialization Procedure. This procedure must be performed in order to run any of the M3200 Processor diagnostics.

**NOTE**

If a system crash has occurred, proceed to step 15.

1. Step Deleted
2. At the MSCF workstation:
   a. On the RPG Control/Status window (HCI Main Menu), click on the Control block in the RDA icon to open the RDA Control/Status window and observe the highlighted RDA Control: field.
   b. In normal operations, the RDA Control: field indicates “Remote RPG” indicating that the RPG is in control of the RDA.
   c. Click “Enable Local (RDA)” in the RDA Control area to allow control at the RDA. “Enable RDA control of RDA” noted on Feedback: line on HCI. If the RPG is not operating or the RDA is already in local control, this step is not necessary.
3. Ensure that the RDA Maintenance Terminal is set to the applications terminal port. If it isn’t, hold the **<Shift>** key down, press the **<Port>** key, then release both keys to obtain the proper display.
4. At the RDA Applications Terminal, ensure that the Main Menu is displayed. If it isn’t, enter **MAIN<Return>** at the `COMMAND:` prompt.
5. At the `COMMAND:` prompt, enter **RELC<Return>** to request local control of the RDA. If the RPG is not operating or the RDA is already in local control, this step is not necessary.

**NOTE**

Entering the **RELC<Return>** command at the RDA applications terminal sends a request to the RPG to allow the RDA to assume control locally. To actually switch from remote (RPG/MSCF) to local (RDA) control, at the MSCF Workstation HCI, click on the Control block in the RDA container and then click on Enable Local (RDA). The sequence that the two commands are entered does not matter.

6. If an Archive II device is not installed on the RDA, or is not currently displaying the RECORD status at the ARCH 2 position in the upper section of the RDA applications terminal, proceed to step 7. Otherwise, at the COMMAND: prompt, enter **ARCH<Tab>** and at the PARAMETER(S): prompt, enter **D<Return>** to disable Archive II recording.

7. If step 6 was performed, then wait until the radar is into the 1.5 degree elevation cut of the next volume scan before performing this step. At the COMMAND: prompt, enter **STBY<Return>** to bring the radar to the standby state. Wait for the display to change from OPER to STBY at the STAT (status) position in the upper section of the RDA applications terminal.

8. At the COMMAND: prompt, enter **TERP<Tab>** and at the PARAMETER(S): prompt, enter ***password*<Return>** to stop the RDA applications software.

9. Hold the **<Shift>** key down, press the **<Port>** key, then release both keys to display the RDA system console port.

**NOTE**

All typed entries from this point on, are to be made on the RDA system console port.

10. Enter **D TA<Return>** to display tasks on the system, and see if any tasks are still active.

11. If the message TASK(S) NOT FOUND is displayed, or the TIME task is the only active task, proceed to step 12. Otherwise, each task must be cancelled by entering **CA *taskID*<Return>**.

12. Enter **ERR LOG,OFF<Return>** to turn the error logger off.

13. Enter **MA DSCØ:,OFF<Return>** to mark off the system disk.

14. Enter **D D<Return>** to display devices on the system and verify that the system disk, DSCØ:, is marked off.

15. Insert and secure the Computer Program Configuration Item (CPCI) 7 Concurrent Computer Corporation (CCC) diagnostic tape cartridge into the Small Computer System Interface (SCSI) tape drive UD5A5A1. Ensure that the arrow on the top of the tape cartridge is in the “SAFE” position, to avoid possible overwrite.

16. Hold the **<Ctrl>** key down, press the **V** key twice, release both keys, then press the **<Return>** key as many times as necessary until a `CDS>` prompt is displayed. This accesses the control/diagnostic system (CDS).

17. Enter **HA<Return>** to halt the processor.

18. Enter **PO OFF<Return>** to power off the processor.

19. Enter **PO ON<Return>** to power on the processor.

**NOTE**

By powering on the processor, a series of self-tests are started. If the self-tests pass, the processor is setup to automatically begin an initialization and boot process called the initial program load (IPL).

20. When the message `Basic Confidence Test Complete` appears on the system console, and a countdown begins, press the **<Break>** key before the countdown completes. This will prevent the operating system (OS) from being loaded and started. The `Load Menu:` will be displayed, and the diagnostics can now be loaded.

21. At the `Entry =` prompt, enter **1<Return>** to select the SCSI tape drive.

22. At the `Update CDS configuration table? (Y or N)` prompt, enter **N<Return>** to not update the CDS configuration table.

23. At the `FILEMARKS =` prompt, enter **Ø<Return>** to begin loading the Low Loader Executive Program (6-145). When the program has completed the load process, the screen will indicate that the Low Loader Executive Program is loaded, and then a "`-`" (minus sign) prompt will appear.

24. Enter **CEILING FFFFFFFF<Return>**. This command initiates a full memory search by the Low Loader Executive Program. The new CEILING amount will be set to the amount of memory that was found during the search.

25. Enter **OPTION<Return>** and verify that CEILING is now set to 7FFFFF.

4-6.4.2 Program Loading Introduction. After the initialization procedure is accomplished, a diagnostic test program can be loaded and run. Refer to paragraph 4-6.2 for a list of diagnostic programs for the RDA. To load and run a test program, the operator or technician must know the sequence number (location number) of the desired program on the tape. Load a test program as follows:

**NOTE**

All entries for this procedure are made at the system console. M3200 processor diagnostics must run from boot up (Filemarks=Ø).

1. Enter **D** to display listing of diagnostic programs. Note the sequence number (in first column on the left) for M3200 Processor Diagnostic (06-319) (ignore H and L). To get the proper filemarks number, count the number of programs displayed which must be skipped to get to (06-319). Figure 4-24 below shows filemarks must equal 7 to load and run M3200 Processor Diagnostic.

```
001   06-145F01     R16     16   LOW LOADER/EXECUTIVE 06-270R18
002   06-228        R09     09   3200 PROCESSOR TEST PART 1
003   06-229        R09,2   10   3200 PROC TEST PT2 (7210,7272)
004   06-145F01     R16     16   HIGH LOADER/EXECUTIVE
005   06-309        R11     11   3280 CPU DIAGNOSTIC (NEW)
006   06-309        R04     04   3280 CPU DIAGNOSTIC (OLD)
008   06-319        R03,1   03   MICRO3200 CPU DIAG. (8074)
010   06-315        R03     03   LOW 3280/MICRO3200 DISPATCH *
```

Figure 4-24. Example where Filemarks = 7

The Figure 4-24 columns (from left to right) are as follows:

1st column - Sequence No. (Location of program on tape)
2nd column - Program number (Test Program)
3rd column - Revision number
4th column - Title of Test Program
5th column - Starting Address
6th column - Ending Address.

2. Enter **LO *sequence no.*;ST<Return>** to load and start test program. Example: LO ØØ8;ST<Return> will load M3200 CPU DIAGNOSTIC (8074).

**NOTE**

Either the Low Loader/Executive or the High Loader/Executive must be loaded prior to loading a diagnostic test program. If the wrong loader/executive is in place, a message indicating that the low or high loader is required to run the program is displayed. To load the Low or High Loader/Executive, perform step (a) or (b) as applicable.

a. Enter **LO *sequence no. for Low Loader/Executive*;ST<Return>** for the Low Loader/Executive.

b. Enter **LO *sequence no. for High Loader/Executive*;ST<Return>** for the High Loader/Executive.

4-6.4.3 06-127 Common RS-232 Interface Off-Line Test Procedure. The RS-232 ports at addresses 10, 12, 14, 16, 18, and 1A of the 8-line Communication Multiplexer (COM MUX) card, UD5A12A19 will be tested. The system console interfaces to COM MUX through port address 10, UD5A16J0. Communication between the system console and the COM MUX during the diagnostic

test will serve as a valid diagnostic test for port address 10. In full-duplex interface mode, the default tests are 1, 2, 3, 4, C, D, E, F, 10, and 11.

1. Perform RDA Group shutdown procedure, Table 6-13 steps 1 through 5.g, and 16.b through 16.h.

**NOTE**

Setting the PEDESTAL ELECTRONICS POWER switch to OFF shuts off the pedestal electronics and makes both channels inoperable. It is advisable to bring the operating channel to standby before setting the switch to OFF by entering **STBY <Return>** at the command line of the operating channel.

2. At Maintenance Panel UD5A2, set PEDESTAL ELECTRONICS POWER and DAU POWER switches to **OFF**.

**ESD** **CAUTION** **ESD**

Failure to follow standard ESD card handling procedures when handling the COM MUX card could result in damage to the equipment.

3. Put ESD wrist strap on and attach clip lead to cabinet chassis.
4. On M3200 Micro Five UD5A12 assembly, remove circuit board retaining bar housed across slots A10 through A21.
5. Unplug four connectors from front edge connectors of the 8-LINE COM MUX card, UD5A12A19. Pull the card halfway out of its slot.
6. Record DIP switch settings at card locations A25, A82, A122, and A160 (see Figure 6-30).
7. Set DIP switch settings at card locations A25, A82, and A122 to the **OFF** position. Set DIP switch settings at location A160 to the **OFF** position, except DIP switches 1, 3, and 4 which should be set to **ON**.
8. Reinstall the 8-LINE COM MUX card, UD5A12A19, and reconnect cables.
9. Install and secure the M3200 diagnostic tape into the SCSI tape drive unit.
10. At the RDA System Console `CDS>` prompt, enter **PO ON<Return>**.
11. At the RDA System Console:
    a. Press the **<Break>** key when the message `DEV=SCSI DISK 1` appears on the screen. At this time, a menu will be displayed on the screen.
    b. At the `ENTRY=` prompt, enter **1 <Return>** to select the tape drive unit.

c. At the `Update CDS Configuration Table? (Y OR N)` prompt, enter **N<Return>**.

d. At the `FILEMARKS=` prompt, enter **4<Return>** to load and start the High Loader/Executive Program (06-145). The screen will indicate that the program is loaded and ready for operator input by displaying the diagnostic "`-`" prompt.

12. At the "`-`" prompt, enter **D<Return>**. A portion of a diagnostic program list will be displayed on the screen. Note the sequence number, first column on the left, for the Common RS-232 Interface Off-Line Test Program (06-127). If it does not appear on the screen, hit the (**+**) key and **<Return>** to display additional entries of the list. Continue to do this until 06-127 is found.

13. At the "`-`" prompt, enter **LO *sequence no. for the RS-232 test*; ST<Return>** to load and execute the common RS-232 diagnostic test program. The screen will indicate that the program is loaded and ready for operator input by displaying the "`*`" prompt.

14. At the "`*`" prompt, enter the following:

    **PAIRS 1 <Return>**

    **TDEVN 12 <Return>**

    **CDEVN 16 <Return>**

    **OPTION <Return>**

15. On the screen, verify entries of previous step.

16. Remove cable plug connected to UD5W638 from J1 of I/O Convenience Panel, UD5A16. For FAA redundant systems, this cable is UD5W638. For NWS redundant systems, this cable is UD5W668.

17. Attach 8-LINE COM MUX test cable, 17-514, between UD5A16J1 and UD5A16J2.

18. At the "`*`" prompt, enter **RUN <Return>** to start the test and observe `NO ERROR` is displayed when the test is finished.

19. Remove test cable, 17-514, from UD5A16J1 and UD5A16J2. Reinstall cable UD5W638 or UD5W668 to UD5A16J1.

20. Remove cable UD5W631 P3 from UD5A16J4. Remove cable UD5W631 P2 from UD5A16J9. Install test cable, 17-514, between UD5A16J4 and UD5A16J9.

21. At the "`*`" prompt, enter the following:

    **PAIRS 1 <Return>**

    **TDEVN 14 <Return>**

    **CDEVN 18 <Return>**

    **OPTION <Return>**

22. On the screen, verify entries of previous step.

23. At the "*" prompt, enter **RUN <Return>** to start the test and observe NO ERROR is displayed when the test is finished.

24. Remove cable UD5W663 from UD5A16J8.

25. Remove test cable, 17-514, from UD5A16J4 and UD5A16J9 and install between UD5A16J9 and UD5A16J8 for redundant systems. For single-channel, non-redundant systems, install test cable between UD5A16J2 and UD5A16J8.

26. At the "*" prompt, enter the following:

    **PAIRS 1 <Return>**

    **TDEVN 18 <Return>** (For single-channel systems, **TDEVN 16 <Return>**)

    **CDEVN 1A <Return>**

    **OPTION <Return>**

27. On the screen, verify entries of previous step.

28. At the "*" prompt, enter **RUN <Return>** to start the test and observe NO ERROR is displayed when the test is finished.

29. Remove test cable, 17-514, from UD5A16J9 and UD5A16J8 for redundant systems. For single-channel systems, remove test cable from UD5A16J2 and UD5A16J8. Reinstall cables to UD5A16J4, UD5A16J8, and UD5A16J9, respectively.

30. At the RDA System Console, **simultaneously** press the **<Ctrl>** and **V** keys twice and press **<Return>** to enter the CDS mode. Enter **PO OFF <Return>**.

**WARNING**

The PO OFF<Return> command turns off the fans in the Swing-Out Power Subsystem (SOPS) UD5PS5. Without the fans to cool the SOPS, components will overheat and can explode or burn. Enter the PO ON,FP12<Return> command immediately after the PO OFF<Return> command to reenergize the fans and prevent component overheating. Failure to comply may result in serious injury or equipment damage.

31. Enter **PO ON,FP12<Return>**.

32. Using an ESD ground strap, repeat steps 3 and 5 to pull the 8-LINE COM MUX card, UD5A12A19, halfway out of its slot. Restore original DIP-switch settings as recorded in step 6.

33. Reinstall the 8-LINE COM MUX card, UD5A12A19, and reconnect cables. Reinstall circuit board retaining bar housed across slots A10 through A21.

34. Enter **PO ON <Return>**.

35. Remove diagnostic tape from SCSI tape drive unit.

36. At the RDA Maintenance Panel, UD5A2, place the pedestal and DAU power switches to the **ON** position.

37. Perform procedure in paragraph 4-6.5 to restore system to normal operation.

4-6.4.4 VMEbus to Concurrent I/O Bus Interface Diagnostic Test Procedure.

1. Perform step 1 in Table 6-13 to obtain local control.

2. At the RDA Applications Terminal, enter **TERP** on the command line and press **<Tab>** so that the cursor moves to the parameters line. Enter ***password*** on the parameters line and press **<Return>**. This stops the application program. Press the **<Shift>** and **<Port>** keys **simultaneously** to move cursor to the system console's "*" prompt.

3. Enter the CDS mode by **simultaneously** pressing **<Ctrl>** and **V** keys twice and then pressing **<Return>** key.

4. At CDS> prompt, enter **PO OFF <Return>**.

**WARNING**

The PO OFF<Return> command turns off the fans in the Swing-Out Power Subsystem (SOPS) UD5PS5. Without the fans to cool the SOPS, components will overheat and can explode or burn. Enter the PO ON,FP12<Return> command immediately after the PO OFF<Return> command to reenergize the fans and prevent component overheating. Failure to comply may result in serious injury or equipment damage.

5. At the CDS> prompt, enter **PO ON,FP12<Return>**.

6. Place LSU/OFF/CONFIG toggle switch on the front panel of the VCI-C card, UD5A12A18, to the **LSU** position.

7. At the **INIT <Return>**.

8. Press **<Break>** key as soon as the following appears on the screen: CONCURRENT COMPUTER CORPORATION IPL 06-298 F03R18.

9. At Entry = prompt, enter **3<Return>** for custom IPL setup.

10. At the Update CDS Configuration Table? (Y or N) prompt, enter **N <Return>**.

11. At the RDA System Console, verify that VCI sign-on message is observed. After message is observed, switch the LSU/OFF/CONFIG toggle switch back to the **OFF** position (center position).

12. Enter **OPT<Return>** at the diagnostic prompt to observe the options.

13. Refer to Figure 4-25 to observe the options. (If any differ, set them to the proper value by entering the option, a space, the applicable value listed below, and <Return>.)

```
MACROLINK VCI-C Adapter Diagnostic 300272A
Copyright 1992, 1993 MACROLINK, Inc. All Rights Reserved

Available Memory
000000-7FFFFF
ADapter          0E0
AM               39
T19MODE          0
LOw              020000
HIgh             03FFFF
ILEVel           00
IMage            A5A5
BUFFil           48F0
INbuf            06000
OUTbuf           020000
PATtern          3
SCOPE            0          ITeration    001500     LOOp         0
PROceed          1          REPeat       000001     SKIPprint    0001
CONTinuous       0          BIas         000000
TEst             0-8
```

Figure 4-25. VCI-C Diagnostic Test Options

14. Enter **RUN<Return>** to execute the diagnostic tests.

15. Observe `END OF TEST, NO ERROR` on screen.

16. Perform procedure in paragraph 4-6.5 to restore system to normal operation.

4-6.4.5 06-290 PSPI Diagnostics Test Procedure (PSPI Test). The PSPI card is easily recognizable since it has four edge-mounted LEDs on the lower portion of the board. It has a built-in loopback capability and a built-in SELCH tester. The following procedure details the loopback capability:

1. Perform the initialization procedure in paragraph 4-6.4.1 to stop the application software program.

2. Enter **D** to display a listing of diagnostic programs. Note the sequence number (in first column on the left) for the PSPI Diagnostic Test Program (06-290).

3. Enter **LO *sequence no. for ULI/PSPI Test*;ST<Return>**.

4. Set the test program options to:

| | | |
|---|---|---|
| DEVICE | **8A** | Selects loopback mode |
| SELCH | **F1** | Selects SELCH |
| DATA | **=SHIFT,ØØØØ-FFFF** | |
| TEST | **Ø,1,2,3** | Selects test |
| REPEAT | **1Ø** | Repeats the test 10 times |

5. Enter **RUN <Return>** to execute test.

   Test may fail on first try because of left over data in registers. Proceed to step 6.

   At the end of the 10 tests, the following statements should be displayed:

```
TOTAL PASSES = 10
TOTAL ERRORS = 0
```

6. Perform restoration procedures in paragraph 4-6.5 to restart the application software.

4-6.4.6 06-297 Intelligent Peripheral Controller (IPC) Diagnostic Test Procedure. The IPC diagnostic requires the use of a scratch tape cartridge to insert into the small computer system interface (SCSI) tape drive. Exercise care when selecting the option parameters to avoid an overwrite of the operational disk.

1. Perform the Initialization Procedure in paragraph 4-6.4.1 to stop the RDA application software and load the Computer Program Configuration Item (CPCI) 7 Concurrent Computer Corporation (CCC) diagnostic tape cartridge.

**NOTE**

All entries for this procedure are made at the RDA System Console.

2. Enter **LO 481;ST<Return>** to load and start the IPC diagnostic. A count of sequence numbers will begin. When the count reaches 481, the IPC diagnostic is loaded and started, and the IPC diagnostic MAIN MENU is displayed.

3. At the "`*`" prompt, enter **DEV<Return>** to display the `IPC DEVICE OPTIONS MENU`.

4. Enter **SELCH /,1/F<Return>**. This will clear INDEX and select SELCH address F for INDEX 1.

5. Enter **OPTION<Return>** and verify that the following option parameters are selected:

| Option Name | Option Parameter | Description |
|---|---|---|
| INDEX | 1 | The default INDEX that is used with a SCSI tape drive. |
| SELCH | ØFØ | Defines the CCC selector channel, or SELCH, address to be F. |
| IPCADR | ØD8 | Defines the optical disk controller, or ODC, address to be D8. |
| DEVADR | ØDE | Defines the device, or SCSI tape drive, address to be DE. |
| DEVTYP | Ø3 | Defines the device type as a SCSI tape drive. |

   If these option parameters are correct, proceed to step 7; otherwise, perform step 6.

**CAUTION**

If the option parameters listed above are incorrect, proceeding with the test could cause an overwrite of the operational disk.

6. To change any of these option parameters, the following format must be used:

   ***OPTION NAME* 1/*XXX*<Return>**.

   For example, to select the correct IPCADR parameter enter:

   IPCADR 1/D8<Return>.

7. At the SCSI Tape Drive UD5A5A1, remove the CPCI 7 CCC diagnostic tape cartridge.

8. Ensure that the arrow on the top of the scratch SCSI tape cartridge is not in the SAFE position. This will allow writing on the tape. Insert and secure the scratch SCSI tape cartridge into the SCSI tape drive.

9. Enter **RUN<Return>** to execute the IPC diagnostic.

10. After the test has completed, remove the scratch SCSI tape cartridge from the SCSI tape drive.

11. This completes the IPC diagnostic for the following units:

| | | | |
|---|---|---|---|
| SELCH | UD5A12A13 | Address | FØ |
| ODC | UD5A12A12 | Address | D8 |
| SCSI Tape Drive | UD5A5A1 | Address | DE |

**NOTE**

To end testing here and restore the system to normal operation, proceed to step 39. Proceed to step 12 to continue testing on the PSPI SELCH UD5A12A15, address F2.

12. Hold the **<Ctrl>** key down, press the **V** key twice, release both keys, then press the **<Return>** key as many times as necessary until a `CDS>` prompt is displayed. This accesses the control/diagnostic system (CDS).

13. Enter **HA<Return>** to halt the processor.

14. Enter **PO OFF<Return>** to power off the processor.

**WARNING**

The PO OFF<Return> command turns off the fans in the Swing-Out Power Subsystem (SOPS) UD5PS5. Without the fans to cool the SOPS, components will overheat and can explode or burn. Enter the PO ON,FP12<Return> command immediately after the PO OFF<Return> command to reenergize the fans and prevent component overheating. Failure to comply may result in serious injury or equipment damage.

15. Enter **PO ON,FP12<Return>**.

**ESD** **CAUTION** **ESD**

Failure to follow prescribed electrostatic sensitive device (ESD) card handling procedures when handling the SELCH in the following steps could result in damage to the equipment.

16. Swap SELCH boards between slots A12A13 and A12A15.

17. Insert and secure the CPCI 7 CCC diagnostic tape cartridge into the SCSI tape drive. Ensure that the arrow on the top of the tape cartridge is in the **SAFE** position, to avoid possible overwrite.

18. Enter **PO ON<Return>** to power on the processor.

**NOTE**

By powering on the processor, a series of self-tests are started. If the self-tests pass, the processor is setup to automatically begin an initialization and boot process called the initial program load (IPL).

19. When the message `Basic Confidence Test Complete` appears on the system console, and a countdown begins, press the **<Break>** key before the countdown completes. This will prevent the operating system (OS) from being loaded and started. The Load Menu will be displayed, and the diagnostics can now be loaded.

20. At the `Entry =` prompt, enter **<Return>** to evoke the LSU interactive session.

21. At the `O.S. DEVICE CODE =` prompt, enter **55<Return>** to specify a SCSI tape drive as the load device.

22. At the `DEVICE ADDRESS =` prompt, enter **DE<Return>** to specify the SCSI tape drive address.

23. At the `CONTROLLER ADDRESS =` prompt, enter **D8<Return>** to specify the ODC address.

24. At the `SELCH ADDRESS =` prompt, enter **F1<Return>** to specify the SELCH address.

25. At the `Update CDS configuration table? (Y or N)` prompt, enter **N<Return>** to not update the CDS configuration table.

26. At the `FILEMARKS =` prompt, enter **<Return>** to begin loading the Low Loader Executive Program (06-145). When the program has completed the load process, the screen will indicate that the Low Loader Executive is loaded, and then a "`-`" prompt will appear.

27. Enter **CEILING FFFFFFFF<Return>**. This command initiates a full memory search by the Low Loader Executive Program (06-145). The new CEILING amount will be set to the amount of memory that was found during the search.

28. Enter **OPTION<Return>** and verify that CEILING is now set to 7FFFFF.

29. Perform steps 2 and 3.

30. Enter **SELCH /,1/F1<Return>**. This will clear INDEX and select SELCH address F1 for INDEX 1.

31. Enter **OPTION<Return>** and verify that the following option parameters are selected:

| Option Name | Option Parameter |
|---|---|
| INDEX | 1 |
| SELCH | F1 |
| IPCADR | D8 |
| DEVADR | DE |
| DEVTYP | 3 |

**CAUTION**

If the option parameters listed above are incorrect, proceeding with the test could cause an overwrite of the operational disk.

32. If these option parameters are correct, perform steps 7 through 10; otherwise perform steps 6 through 10.

33. This completes the IPC diagnostic for all units.

34. Hold the **<Ctrl>** key down, press the **V** key twice, release both keys, then press the **<Return>** key as many times as necessary until a `CDS>` prompt is displayed. This accesses CDS.

35. Enter **HA<Return>** to halt the processor.

36. Enter **PO OFF<Return>** to power off the processor.

**WARNING**

The PO OFF<Return> command turns off the fans in the Swing-Out Power Subsystem (SOPS) UD5PS5. Without the fans to cool the SOPS, components will overheat and can explode or burn. Enter the PO ON,FP12<Return> command immediately after the PO OFF<Return> command to reenergize the fans and prevent component overheating. Failure to comply may result in serious injury or equipment damage.

37. Enter **PO ON,FP12<Return>**.

**ESD** **CAUTION** **ESD**

Failure to follow prescribed electrostatic sensitive device (ESD) card handling procedures when handling the SELCH in the following steps could result in damage to the equipment.

38. Return the cards that were swapped in step 16 to their original slots.

39. Perform the RDA Restoration Procedure in paragraph 4-6.5 .

4-6.4.7 06-319 M3200 Processor Diagnostic Procedure.

1. Perform the initialization procedure in paragraph 4-6.4.1 to stop application program and load diagnostic tape.

**NOTE**

All entries for this procedure are made at the system console. M3200 CPU diagnostics does not use an Executive Loader program in order to run. Must run from boot up (Filemarks ≠ Ø).

2. Enter **D** to display listing of diagnostic programs. Note the sequence number (in first column on the left) for M3200 Processor Diagnostic (06-319) (ignore H and L). To get the proper filemarks number, count the number of programs displayed which must be skipped to get to (06-319). The example below shows filemarks must equal 7 to load and run M3200 Processor Diagnostic.

```
001   06-145F01     R16     16   LOW LOADER/EXECUTIVE 06-270R18
002   06-228        R09     09   3200 PROCESSOR TEST PART 1
003   06-229        R09,2   10   3200 PROC TEST PT2 (7210,7272)
004   06-145F01     R16     16   HIGH LOADER/EXECUTIVE
005   06-309        R11     11   3280 CPU DIAGNOSTIC (NEW)
006   06-309        R04     04   3280 CPU DIAGNOSTIC (OLD)
008   06-319        R03,1   03   MICRO3200 CPU DIAG. (8074)
010   06-315        R03     03   LOW 3280/MICRO3200 DISPATCH *
```

Figure 4-26. Example where Filemarks = 7

3. Perform steps 16 through 22 of the initialization procedure in paragraph 4-6.4.1 to reload diagnostic tape.
4. Place LSU/OFF/CONFIG toggle switch on the front panel of the VCI-C card UD5A12A18, to the **LSU** position.
5. At the `Filemarks=` prompt, enter the filemarks number from step 2.
6. Enter **R** to execute tests 1 through 44 when `ENTRY->` prompt is displayed.
7. After `End of Tests 1 through 44`, observe `NO ERRORS` is displayed. Enter **C** to continue with subtests 45 through 48.
8. `DEPRESS KEYS 1234567890` is displayed on the screen.
   Enter **1234567890**. (Operator input is not echoed on the screen).
9. `DEPRESS KEYS 1234567890` is again displayed on the screen.
   Enter **1234567890**. (Operator input is not echoed on the screen).
10. `TYPE THE "BREAK" KEY` is displayed.
    Press the **<Break>** key and enter **C** to continue.
11. The following is displayed on the screen:
    ```
    1234567890
    1234567890
    ZZZZZZZZZZ
    ZZZZZZZZZZ
    1234567890
    1234567890
    DEPRESS KEYS
    1234567890
    ```
    Enter **1234567890**. (Operator input is not echoed on the screen.)
12. The following is displayed on the screen:
    ```
    1234567890
    DEPRESS KEYS
    1234567890
    ```
    Enter **1234567890**. (Operator input is echoed on the screen.)

    The following is displayed on the screen:
    ```
    ABCDEFGHIJ
    1234567890
    1234567890
    1234567890
    TEST 48 POWER FAIL AND RESTORE
    PLEASE ENSURE THAT IPL IS DISABLED BEFORE INITIALIZING
    SYSTEM
    ```
13. `RESET THE PROCESSOR` is displayed.
    Press **<Ctrl>** and **V** keys **simultaneously** twice and then press **<Return>**. The `CDS>` prompt appears on screen. At the `CDS>` prompt, enter **RESET**.

14. `Power off by typing → PO OFF,P5`
    `Power on by typing → PO ON,P5` is displayed.
    Press **<Ctrl>** and **V** keys **simultaneously** twice and then press **<Return>**. The `CDS>` prompt appears on screen. At the `CDS>` prompt, enter:

    a. **PO OFF,P5<Return>**

    b. **PO ON,P5<Return>**

15. `CONSTANT LOAD COMPLETE` is displayed. Repeat steps 13 and 14.

16. Place the LSU/OFF/CONFIG toggle switch on the front panel of the VCI-C card UD5A12A18, to the **OFF** position.

17. The system will reboot. Observe that `NO ERRORS` is displayed.

**NOTE**

This completes the M3200 test procedure.

18. Remove cartridge tape from the SCSI tape drive.

19. Perform the procedure in paragraph 4-6.5 to restore the system to normal operation.

4-6.4.8 06-321 M3200 Cache Diagnostic Test Procedure.

1. Perform initialization procedure in paragraph 4-6.4.1 to stop application program and load diagnostic tape.

**NOTE**

All entries for this procedure are made at the system console.

2. Enter **D** to display listing of diagnostic programs. Note the sequence number (in first column on the left) for M3200 Cache Diagnostic Test (06-321) (ignore H and L).

3. Enter **LO *sequence no. for CACHE diagnostic test*; ST <Return>**.

4. Enter **RUN <Return>** to execute test. Observe that `NO ERRORS` is displayed.

5. Remove cartridge tape from SCSI tape drive.

6. Perform procedure in paragraph 4-6.5 to restore system to normal operation.

4-6.4.9 06-325 Composite Memory Module (CMM), Part 1 Diagnostic Test Procedure.

1. Perform the initialization procedure in paragraph 4-6.4.1 to stop the application program and load diagnostic test.

**NOTE**

All entries for this procedure are made at the system console.

2. Enter **D** to display listing of diagnostic programs. Note the sequence number (in first column on the left) for CMM part 1 test.
3. Enter **LO *sequence no. for CMM part 1 test*;ST <Return>**.
4. Set the HI limit memory ceiling to 1FFFFFF by entering **HI 1FFFFFF**.

**NOTE**

Test takes approximately three minutes to run.

5. Enter **RUN <Return>** to execute CMM part 1 test and observe `NO ERROR` is displayed.

**NOTE**

The CMM part 1 test is now completed.

6. Remove cartridge tape from SCSI tape drive.
7. Enter **END <Return>**
8. Perform procedure in paragraph 4-6.5 to restore system to normal operation.

4-6.4.10 06-325 Composite Memory Module (CMM), Part 2 Test Procedure.

1. Perform the initialization procedure in paragraph 4-6.4.1 to stop the application program and load diagnostic test.

**NOTE**

All entries for this procedure are made at the system console. The following series of tests take approximately 4 minutes to run.

2. Enter **D** to display listing of diagnostic programs. Note the sequence numbers (in the first column on the left) for High Loader (06-145) and CMM part 2 test.
3. Enter **LO *sequence no. for High Loader*;ST <Return>**.
4. Enter **LO *sequence no. for CMM part 2 test*;ST <Return>**.
5. Enter **RUN <Return>** to execute CMM part 2 test and observe `NO ERROR` is displayed.

**NOTE**

The CMM part 2 test is now completed.

6. Remove cartridge tape from SCSI tape drive.
7. Perform procedure in paragraph 4-6.5 to restore system to normal operation.

4-6.5 RDA RESTORATION PROCEDURE.

At completion of RDA M3200 processor diagnostic procedures, the following steps must be accomplished to restore the RDA to normal operation.

1. At the RDA Maintenance Terminal on the system console port, perform the following steps:

   a. Hold the **<Ctrl>** key down, press the **V** key twice, and release both keys.

   b. Press the **<Return>** key as many times as necessary until a `CDS>` prompt is displayed. This accesses the control/diagnostic system (CDS).

   c. Enter **HA<Return>** to halt the processor.

   d. Enter **PO OFF<Return>** to power off the processor.

   e. Enter **PO ON<Return>** to power on the processor.

   **NOTE**

   By powering on the processor, a series of self-tests are started. If the tests pass, the processor is set up to automatically begin an initialization and boot process called the initial program load (IPL).

2. At the RDA System Console, observe that the processor is booting up, DSCØ: is marked on, and the RDA application software is coming up.

3. Press the **<Shift>** and **<Port>** keys **simultaneously** to switch to the applications terminal Main Menu.

4. After the radar completes it's initial calibration process and the XMTR status returns to STBY, enter **OPER<Return>** at the command line.

5. Verify that the Power Amplifier Unit UD5A7 is energized, the antenna is turning, and the transmitter is radiating.

6. At the command and parameter lines, enter **ARCH<Tab>E<Return>** to enable Archive II recording.

7. At the command line, enter **ENRC<Return>** to enable remote control of the RDA at the MSCF workstation.

# Section 4-7. RDA System Operability Test Operations

## 4-7.1 INTRODUCTION.

This section contains general information, functional descriptions, and procedures for the RDA System Operability Test (RDASOT) program. The RDASOT is an off-line program used to determine (RDA) hardware status, to verify calibration parameters, and to support maintenance. The RDASOT program consists of three parts: diagnostic tests, calibration functions, and maintenance aids. Although this section provides a description and general procedures for executing RDASOT, the procedure should only be performed when directed by a specific troubleshooting or preventive or corrective maintenance section (for example, fault isolation flowchart or (LRU) alignment). Refer to NWS EHB 6-510-2, RDASOT User's Guide for more detailed information.

**NOTE**

This section refers to the RDADP as UD5, the Receiver as UD4, the Transmitter as UD3, and the Waveguide Pressurization Unit as UD6. Unless otherwise specified, the information also applies to redundant systems UD105, UD104, UD103, and UD106.

## 4-7.2 GENERAL INFORMATION.

The RDASOT program is executed from the RDA maintenance terminal in the system console mode. The RDASOT program interfaces directly with the operating system (OS/32) and indirectly with the RDA application program via data files in mass storage. The (SOT) control is responsible for the overall control of the SOT CPCI. This function processes the selection of the tests and other functions, controls the execution of each test and provides a common operator-machine interface. The following paragraphs provide general information that the operator should be familiar with before starting RDASOT.

4-7.2.1 Operator Inputs. There are various operator inputs required by RDASOT during execution. To know the type of input required, the operator must know the types of prompts to expect, the commands needed to be inputted to perform various tasks, and the responses required during execution. The operator should expect two types of input requests on the system console. If the RDASOT is not initialized and executing, the concurrent operating system will display an "*" to prompt the operator for input. If the RDASOT is executing, the operator can expect a display of the current task followed by a colon, as shown below:

```
Task Name:

78:22:56  RDASOTXX:
```

All input requests required during execution of the RDASOT will be preceded by an input message on the system console screen.

4-7.2.2 RDASOT Command. The RDASOT command is used to begin execution of the RDASOT program. The operator must be on the RDA system console and no other programs

should be running. Enter **RDASOT <Return>** after the OS prompt (*). The word RDASOT should scroll up on the screen followed by the loading sequence. Once RDASOT is loaded and initialized, the Main Menu will appear on the screen.

4-7.2.3 Termination of RDASOT. There are two ways to terminate the RDASOT: normal termination, and forced termination. The following paragraphs provide a description of each.

4-7.2.3.1 Normal Termination. Normal termination is the preferred method of terminating RDASOT because it is generally faster and cleaner than forced terminations. It should be used when performing an RDA function, in other words, when the technician is at any of the RDASOT menus and wishes to terminate RDASOT and no RDA function is being run. For normal termination of RDASOT, enter **Ø<Return>**, repeatedly, until the RDASOT Main Menu appears on the screen. Then enter the corresponding TERMINATE RDASOT entry, **Ø<Return>** on the menu. RDASOT will then terminate and the RDASOT software will be removed from memory. The main program will display an elapsed time message followed by a termination message before the tasks are removed.

4-7.2.3.2 Forced Termination. Forced terminations are used when an RDASOT function is being run and the operator needs to either terminate that function and return to the previous menu, or terminate that function and RDASOT entirely. There are two types of forced termination commands: Term Command, and KILLSOT Command. Both commands for forced terminations are done through OS/32 and require an OS prompt (*). The following paragraphs briefly describe each command.

4-7.2.3.2.1 Term Command. The Term Command is used to terminate the current function in process. The terminate sequence used will depend on the prompt currently displayed at the system console. If the prompt currently being displayed is the OS prompt (*), enter **TERM <Return>**. The Test Control Menu of the function that is being terminated is then displayed, followed by an RDASOT prompt (>), awaiting operator response. If the prompt currently being displayed is the RDASOT prompt (>), press the **<Break>** key. The OS prompt (*) will be displayed on the screen. To redisplay the RDASOT prompt enter **TERM <Return>**. Repeat **<Return>** until the Test Control Menu of the function that is being terminated is displayed.

4-7.2.3.2.2 KILLSOT Command. The KILLSOT command is used to accomplish termination of the RDASOT program while an RDASOT function is in progress. The termination sequence used will depend on the prompt currently displayed at the system console. If the prompt currently being displayed is the OS prompt (*), enter **KILLSOT <Return>**. The function and RDASOT should be terminated, with an orderly removal of tasks from memory taking place and displayed on the screen. If the prompt currently being displayed is the RDASOT prompt (>), depress the **<Break>** key. The OS prompt (*) will be displayed on the screen. To redisplay RDASOT prompt (>) enter **KILLSOT <Return>**. Repeat **<Return>** until the RDASOT prompt is no longer displayed. The RDASOT program is terminated, the tasks are removed from memory and displayed on the system console. The KILLSOT command is also used for situations in which RDASOT software must be removed from memory by operator intervention. For example, if an error occurred during initial loading of the software that prevented the program from coming up and leaving some of the RDASOT tasks in memory, KILLSOT should be used to remove them before attempting to initiate RDASOT again. The use of KILLSOT may also be required before initiating another program, if termination of RDASOT did not remove all RDASOT tasks from memory.

4-7.2.4 Menu Selection and Error Message Paging. To make the operator inputs as efficient as possible, all menus contain the same format. When a menu is displayed, a line appears on the screen followed by an RDASOT task prompt indicating operator response is required. After the prompt, type the number corresponding to a selection on the menu and then press **<Return>**. Once the entry is made, the item selected from the menu will be executed. Should errors occur during any subtest, an error message will appear on the screen. Each error message has a similar format. At the top of each error message, the words "1 of #" may appear. The # informs the operator of the number of error messages that occurred during a particular test. At the bottom, the following diagnostic prompt appears:

```
HWSPDIAG:ENTER Ø TO CONTINUE, TERM TO EXIT OR ERROR# TO DISPLAY
```

To view the rest of the error messages after the RDASOT input prompt, enter a number not to exceed the number of errors that occurred. Another error message will appear on the screen. The operator may then enter another number to view other error messages. To view error messages, the numbers entered need not be in sequence and any number may be entered as many times as needed. To discontinue execution, enter either **Ø<Return>** or **TERM<Return>**.

4-7.2.5 Test Control and Subtest Options. A test control menu is displayed upon selection of a diagnostic test or calibration test. This menu allows the operator to control error handling and test sequencing. The operator has the option of selecting all, none, or individual subtests.

4-7.2.5.1 Select All Subtests. To select all subtests, the operator must select **3<Return>** from the diagnostic test control menu. By selecting the select all option, any subtest that has not been selected will take on a selected status.

4-7.2.5.2 De-Select All Subtests. To de-select all subtests, the operator must select **4<Return>** from the diagnostic test control menu. By selecting the de-select all option, any subtest that has been selected will take on the de-selected status.

4-7.2.5.3 Select Individual Subtests. The operator also has the option of selecting which subtest should be executed on an individual basis. To select an individual subtest, the operator must select **5<Return>** from the test control menu to display the individual subtest menu. Once the individual subtest menu is displayed, the operator can select subtests, de-select subtests, or observe which subtests have the selected status. The subtest selection is based on a toggle system by which the subtest can be selected and de-selected by repeatedly selecting the same subtest.

After each selection, the individual subtest menu will be displayed showing the current status of each subtest.

4-7.2.6 Test Control Menu Modification Operations.

4-7.2.6.1 Stop on Error. Regardless of the type of error (expected or unexpected), the Stop on Error option will stop the execution of all subsequent subtests and will cause the test control menu for that test to be displayed. To select the Stop on Error option, follow the procedure outlined below.

| | |
|---|---|
| 1. From the Test Control Menu, enter **2<Return>**. | Main Option Menu is displayed. |
| 2. From the Main Option Menu, enter **1<Return>**. | Error Control Option Menu is displayed. |

| | |
|---|---|
| 3. From the Error Control Option Menu, enter **3<Return>**. | Selects STOP ON ERROR. The Error Option Menu remains on screen. |
| 4. Enter **Ø<Return>**. | The Main Option Menu is displayed. The error control option selected in step 3 is displayed in parentheses on the error control line of the Main Option Menu. |

4-7.2.6.2 Continue on Error. If the type of error that occurs is an expected error, the Continue on Error option will stop the execution of the subtest that encountered the error and will proceed to the next executable subtest.

4-7.2.6.3 Loop on Error. If the type of error incurred is a diagnostic error, the Loop on Error option stops the execution of the subtest that incurs the error and executes that same subtest again from the beginning. The Loop on Error option continues to repeat the same subtest until either that subtest is successfully completed or the operator forces a termination. Should a successful completion of that subtest occur, testing continues with the next selection subtest. If the type of error incurred is an unexpected error, the Loop on Error option is suppressed. Test control stops the execution of the subtest that incurs the error and all subsequent subtests. The test control menu is displayed.

## 4-7.3 DIAGNOSTIC TEST FUNCTIONAL DESCRIPTION.

The RDASOT diagnostic tests check the operability of each functional path in the RDA. In many cases, specific components of the hardware are tested by executing the appropriate subtest. The following paragraphs provide a brief functional description of the RDASOT functional diagnostic tests which are listed below:

- Transmitter Diagnostic
- Tower/Utility Diagnostic
- Data Acquisition Unit Diagnostic
- Pedestal Diagnostic
- Receiver Diagnostic
- Programmable Signal Processor Diagnostic
- Hardwired Signal Processor Diagnostic

4-7.3.1 Transmitter Diagnostics. There are four subtests associated with the transmitter diagnostics. The subtests are briefly described below:

| Test | Description |
|---|---|
| Subtest 1 | DAU Status Check - Checks current klystron preheat state. This is done by acquiring the DAU status and inspecting the discrete and analog status Bits/ Bytes. The transmitter high voltage may be either ON or OFF; however, if the klystron is in PREHEAT (Byte Ø, Bit 1 of DAU status), no further processing is performed and an appropriate message shall be displayed. Otherwise, if any of the transmitter status Bits indicate a failure, a message shall be displayed. If in cold startup, an error message will be displayed and no other checks will be made. If not in cold startup, related transmitter interfacing with DAU and PSP is checked. If an error occurs, the failure is identified and appropriate maintenance actions are provided. |
| Subtest 2 | PFN Toggle Check - The PFN is exercised by toggling between short and long pulse. An error message is displayed if an error occurs. |
| Subtest 3 | Waveguide Check - The mechanical waveguide switch is checked by switching between dummy load and antenna positions. |
| Subtest 4 | Peak Power Measurement - The klystron peak power is calculated and measured for the antenna and transmitter. If the readings differ by more than 10 percent, an error message is displayed. |

4-7.3.2 Tower/Utility Diagnostic. There is one subtest in the tower/utilities diagnostic and it is used for isolating failures within the environmental control system, auxiliary power generator, power distribution systems, and the site security system.

4-7.3.3 DAU Diagnostic. The DAU diagnostic is used to isolate failures in the DAU. The DAU diagnostic consists of four subtests and are briefly described below:

| Test | Description |
|---|---|
| Subtest 1 | Reset DAU - Checks RS-232 interface and control circuitry of the DAU. |
| Subtest 2 | Request Status - Checks for transmission of data from DAU to computer RDASC. |
| Subtest 3 | DAU BITE Check - Checks the DAU for valid BITE data that is transmitted and ensures that the discrete serial interface and analog multiplexor is working properly. |
| Subtest 4 | Receive Data Message - Checks the DAU for capability to receive data messages. Audible alarm on maintenance panel sounds if working properly. |

4-7.3.4 Pedestal Diagnostics. The pedestal diagnostics are used to isolate failures within the pedestal. There are four subtests associated with the pedestal diagnostics which are described below. For additional information, refer to NWS EHB 6-510-2, RDASOT User's Guide, paragraph 2-2.2.3.

| Test | Description |
|---|---|
| Subtest 1 | Voltage Check - Checks pedestal power supply voltages. |
| Subtest 2 | Self-Test 1 - 64 different groups of data are sent to the pedestal and the pedestal retransmits the same data. The data pattern is checked for validity. This check ensures that the RS-232 interface is operating properly. |
| Subtest 3 | Pedestal Bit Check - A status check is performed on the pedestal bit data. The BIT status bit is set when the azimuth and elevation rates are initialized to zero. |
| Subtest 4 | Self-Test 2 - Self-test 2 is a pedestal built-in-diagnostic which checks the status code data of the pedestal. |

4-7.3.5 Receiver Diagnostics. The receiver diagnostics are used to fault isolate the receiver. There are twenty subtests which are listed below. The BITE test (subtest 1) checks the following: receiver power supplies, receiver status, HSP end around, and serial link between receiver and control interface. The remaining subtests are specific individual LRU tests. These checks are accomplished by injecting an appropriate signal into the receiver and monitoring the signal at designated test points. For additional information, refer to NWS EHB 6-510-2, RDASOT User's Guide, paragraph 2.2.2.6.

| Test | Description |
|---|---|
| Subtest 1 | BITE Check |
| Subtest 2 | DC offset test |
| Subtest 3 | COHO RF signal test |
| Subtest 4 | Driver RF signal test |
| Subtest 5 | Klystron RF signal test |
| Subtest 6 | CW signal test |
| Subtest 7 | 4 position diode switch |
| Subtest 8 | Attenuated RF test |
| Subtest 9 | 2 position diode switch |
| Subtest 10 | RF signal at front end of receiver |
| Subtest 11 | STALO RF test |
| Subtest 12 | Mixer/preamplifier assembly test |
| Subtest 13 | IF matched filter assembly test |
| Subtest 14 | Coaxial delay line |
| Subtest 15 | IF attenuator test |
| Subtest 16 | IF amp/limiter test |

| Test | Description |
|---|---|
| Subtest 17 | Guardband (+) IF amplifier test |
| Subtest 18 | Guardband (-) IF amplifier test |
| Subtest 19 | Log test video |
| Subtest 20 | RF signal through antenna |

4-7.3.6 Programmable Signal Processor (PSP) Diagnostics. The PSP diagnostic is responsible for isolating failures within the PSP. This includes the Input Signal Conditioner (ISC), Arithmetic Units (AUs), Arithmetic Control Unit (ACU), the Input/Output Controller (IOC) and Serial Maintenance Interface (SMI). The HSP diagnostic assumes that the PSP diagnostic has successfully executed. There are 32 subtests in the PSP diagnostic and they are described below:

| Test | Description |
|---|---|
| Subtest 1 | I/O Loopback. Verifies basic communications between the PSP and the RDASC computer. |
| Subtest 2 | Serial Maintenance Interface (SMI) Bus. Verifies the parallel-to-serial and serial-to-parallel converters by comparing the sent and received data patterns. |
| Subtest 3 | Processor Select. Attempts to select each of the processors (i.e., ACU, AUs, ISC, and IOC). The IOC-SMI path is further verified by this subtest. |
| Subtest 4 | ACU Microinstruction. Verifies the ACU microinstruction. |
| Subtest 5 | Source and Destination Busses. Verifies the logic associated with the ACU source and destination busses. |
| Subtest 6 | Control Store Memory. Verifies the ACU microcode control store addressing uniqueness and the ability to write and read every location. |
| Subtest 7 | ACU Sequencer. Verifies the logic controlling execution, including the micro program counter and microinstruction register. Jumps, interrupts, and the breakpoint register will also be verified. |
| Subtest 8 | ACU ALU. Verifies the ALU operations: add, subtract, shifts, and status. |
| Subtest 9 | ACU Registers. Verifies 29 registers and memory in the ACU and IOC that can be written on the destination bus and read on the source bus. |
| Subtest 10 | Command Banks Selection. Verifies separation bank one and two in performing read and write from both the ACU and IOC. |
| Subtest 11 | ACU Command Banks. Verifies the two command banks, addressing uniqueness, and ability to write and read each location. The command banks are written from the IOC and read from the ACU. |
| Subtest 12 | ECW RAM. Verifies the addressing uniqueness and ability to write and read each location of the Emulation Control Word (ECW) RAM. |
| Subtest 13 | Coefficient Memory. Verifies the 2048 word real and the 2048 word imaginary parts of coefficient memory, both addressing uniqueness and ability to write and read each location. |

| Test | Description |
|---|---|
| Subtest 14 | ACU Address Generation. Verifies the AU memory address generation logic, including use of the index register and the increment/decrement by one and two. |
| Subtest 15 | AU Microinstruction. Verifies the loading of the AU microinstruction register from the ACU. The AU microinstruction consists of the AU portion of the ACU microinstruction, a coefficient, and a memory address. |
| Subtest 16 | AU Busses. Verifies the busses in each AU, as well as the selection circuitry which gates the data onto the busses, the bit set register, and the status register. |
| Subtest 17 | AU Activate/Deactivate. Verifies the conditional activate and deactivate logic. |
| Subtest 18 | AU Parity Generation. Verifies the parity generation, parity checking, and parity error hold logic. The AU memory test verifies memory parity. |
| Subtest 19 | AU Memory. Verifies both banks of 16384 complex words and parity of input memory, and the 16384 complex words and parity of scratchpad memory associated with each AU. Also verifies addressing uniqueness and the ability to read and write every location. |
| Subtest 20 | AU Register File. Verifies the 16 locations in the register file in each AU. |
| Subtest 21 | AU Multiplier and Accumulator. Verifies the set of multiplier and accumulator functions available for execution for each Arithmetic Unit (AU). |
| Subtest 22 | AU PROMs. Verifies the addressing and contents of the square root, reciprocal, and log PROMs. |
| Subtest 23 | Adjacent AU Reads. Verifies that adjacent AUs can read each other's memory. Since there are not four AUs in the system and the AU4 to AU1 wraparound logic is not used operationally, the wraparound logic is not tested. |
| Subtest 24 | IOC Register. Verifies the three IOC registers, using the diagnostic capabilities of the IOC. |
| Subtest 25 | IOC Output Memory. Verifies the 8192 word output memory and the 4096 word status memory. Both addressing uniqueness and ability to write and read every location are verified. |
| Subtest 26 | Output Memory Functional. Verifies the operation of the output memory write sequencer, which includes memory address generation, AU data selection, first/last sequencing, and output memory bank uniqueness. Tests are performed using diagnostic capability of the IOC only, not ACU and AU. |
| Subtest 27 | IOC Interface Test. Verifies the AU to IOC and ACU to IOC interface which includes the 8-bit data output from AUs and address and memory control (MC) microinstruction field from the ACU. |
| Subtest 28 | Output Memory to RDASC Processor. Verifies the transfer of data from the output memory to the RDASC computer, utilizing the status memory. |
| Subtest 29 | IOC Destination Decode. Verifies the destination decode uniqueness for the destinations easily verifiable by the IOC. Remaining destinations will be verified by the HSP diagnostics. |

| Test | Description |
|---|---|
| Subtest 30 | ISC Parameters. Verifies the five registers in the ISC. |
| Subtest 31 | ISC Functional. Verifies the operation of the ISC, which includes verification of the following functional blocks:<br>' timing and control<br>' channel enables<br>' address selection<br>' first/last AU selection<br>' range collapse selection<br>' address generation<br>' sweep counters<br>' input bank selection flip-flop<br>' input and output toggle request<br>' surveillance RAM (tests all locations and addresses for stuck bits)<br>' RAM address counter<br>' range cell counter<br>' parity generator<br>' surveillance RAM tri-state buffers.<br>Tests are performed using the diagnostic capability of the ISC only, not ISC interfaces. |
| Subtest 32 | ISC Interface. Verifies ISC to ACU, IOC to ISC, and ISC to AU interfaces. The ISU to ACU test checks ACU selection of input and output toggle requests as jump conditions and the ability of the ACU to clear those requests. The IOC to ISC test checks the IOC ability to write to the ISC parameters (destination 5) and surveillance memory (destination 4). This test checks for stuck data and address lines for each of the two destinations. The ISU to AU test checks the ISC interface to the AU input memories, which includes address, data, parity, ad control lines, for all combinations of channel 1 working, channel 2 working, and range collapse. |

4-7.3.7 Hardwired Signal Processor (HSP) Diagnostics. The HSP diagnostic is responsible for isolating failures within the HSP. The HSP diagnostic assumes that the PSP diagnostic was successfully executed. There are 11 subtests in the HSP diagnostic which are described below:

| Test | Description |
|---|---|
| Subtest 1 | End Around. Verifies the interface between the programmable signal processor input/output controller and the control interface to the HSP. |
| Subtest 2 | Synchronizer. Consists of two separate cases, which collectively verify the sequencing PROMs which provide timing signals used throughout the HSP. The 4x4 register files are also verified. |
| Subtest 3 | Log. Verifies the test generation logic on the control interface B card, the logarithm to linear conversion circuitry on the prescaler card, and the pipeline circuitry on the output combiner card. |
| Subtest 4 | I, Q, AGC Compensation. Verifies the pipeline registers, AGC compensation factor RAMs, multiplier/accumulators, and the fixed to floating point PROMs. |
| Subtest 5 | Bypass Map. Verifies the bypass map RAM and the bypass commands decode circuitry. |
| Subtest 6 | Notch Width Map. Verifies the notch width map RAM, the notch width scale factor RAM, the normalization PROM, the coefficient PROM, and their associated circuitry. |
| Subtest 7 | Clutter Filter Impulse Response. Verifies the operation of the two clutter filter cards. |
| Subtest 8 | Interference Tag Counter. Verifies the interference tag counter logic using test circuitry set up by HSP destination 7. |
| Subtest 9 | Receiver Interface Control Words. Verifies the 8-bit wide data bus to the receiver from the receiver interface card. |
| Subtest 10 | Analog to Digital. Consists of two cases to verify the analog to digital logic located physically with the receiver. |
| Subtest 11 | Phase Control RAM. Verifies the logic associated with the 4096 by 8-bit RAM. |

4-7.4 CALIBRATION FUNCTIONAL DESCRIPTION.

The RDASOT has three calibration functions: complex spectrum measurement, clutter map generation, and sun source checks. Each function can be performed independently of each other. Each calibration function has one or more subtests which can be selected by the operator. All subtests are selected by default unless the operator specifies subtest selection via the test control menu. The following paragraphs provide a functional description of the calibration functions.

4-7.4.1 Complex Spectrum Measurement. This function assumes that all diagnostic tests have been successfully executed and the RDA system is operating correctly. This function will normally be used only by personnel having considerable technical knowledge and training. The complex spectrum measurement enables the operator to acquire output based on a known test signal. The function has two processing sections: pedestal positioning, and complex spectrum analysis. Pedestal positioning allows the operator to input and display the pedestal position when radar data is to be used instead of signal generator data. The complex spectrum analysis section allows the operator to input parameters to control the collection and processing of data, collect the transmission data, and display results. The complex spectrum measurement function displays available tables of raw power, tables of power connected to dB, plots of power versus frequency for filtered and unfiltered data, and a table of summary data for filtered and unfiltered data.

4-7.4.2 Generate Clutter Map. This function assumes that all diagnostic tests have been successfully executed and that the RDA system is operating correctly. This function also assumes that the RDA operational program has run and valid calibration data is available. Initially, this function is run by the operator at the time the radar site is first established. Thereafter, the clutter map program is run approximately once a year. The generate clutter map function generates a site-dependent clutter filter bypass bit map which is used by the RDA operational program for PSP destination 13.

4-7.4.3 Sun Source Checks. This function assumes that all diagnostic tests have been successfully executed and that the RDA system is operating correctly. This function uses the sun as a test source and performs several checks on the antenna/radome. The sun source check function has two subtests: Subtest 1 (Align Pedestal), and Subtest 2 (Gain/Loss Check).

4-7.5 MAINTENANCE AIDS FUNCTIONAL DESCRIPTION.

The RDASOT maintenance aids allow equipment to the manually controlled and selected data to be displayed. These functions are not diagnostics but are used by maintenance personnel for maintaining the RDA equipment. The maintenance aids are discussed briefly in the following paragraphs and are listed below:

- Control Pedestal
- Control Receiver/Signal Processor
- DAU BITE Display
- Download PSP

4-7.5.1 Control Pedestal. This function provides for manual control of the pedestal and display of its position. There are two levels of menus involved. At the first level, the operator may select to manually control the pedestal in azimuth and elevation, park the pedestal, or display its position.

4-7.5.1.1 Selection of Park Pedestal Function. Selecting the park pedestal function will position the pedestal to the azimuth and elevation park positions defined in adaptation data. If the pedestal is in the high or low elevation stops, it will be driven out of the stops to the park position using pedestal angle corrections from calibration data. The park position and an acknowledgment will be displayed.

4-7.5.1.2 Selection of Position Display. Selection of position display at this menu level will display the current azimuth and elevation positions of the pedestal when the pedestal servo power is off. Pedestal angle corrections from calibration data are not applied to the positions displayed.

4-7.5.2 Control Receiver/Signal Processor. This function provides control of the HSP destination 7 parameters to generate radar test signals, and allows the operator to monitor the receiver built-in test points. In addition, it calculates the RSEC 40 dB and 80 dB bandwidths and transmitter peak power to aid in tuning the klystron. Execution of the one subtest in this function first displays the source selection menu. Selection of a source then causes the appropriate source control menu to be displayed. A summary of the operator options available for each source is shown in Table 4-54.

4-7.5.3 DAU BITE Display. This function will display the discrete and analog data monitored from built-in test equipment (BITE) by the DAU. The display includes a description of each bit/byte, as well as function equals values in the case of discrete data. The operator has the option of selecting additional screens of data to display or the option of refreshing the data on the current screen. A status request is issued to the DAU prior to the display of each screen, so the most current data are always displayed.

4-7.5.4 Download PSP. This function permits the operator to download the PSP microcode from disk files on the RDASC. This is normally used if I/O errors associated with the PSP are occurring and if cabinet is powered down and then powered up during troubleshooting of PSP cards.

## 4-7.6 RDASOT PROCEDURES.

The RDASOT procedures consist of the following:

- Initialization Procedure
- Diagnostic Test Procedure
- Calibration Procedure
- Maintenance Aids Procedure

4-7.6.1 Initialization Procedure. The initialization procedure is performed to initialize RDASOT and make a selection to record the maintenance session. The initialization procedure must be performed prior to performing any of the other procedures.

1. Perform the following steps to terminate the application program and initialize RDASOT diagnostic program.
   a. At RDA Applications Terminal Main Menu, **<Tab>** cursor to the command line and enter **TERP**.

b. **<Tab>** cursor to the parameter line and enter ***password*<Return>** to terminate the application program.

c. **Simultaneously** press the **<Shift>** and **<Port>** keys to place the terminal in system console mode.

**NOTE**

Verify application program is terminated by observing the `END OF TASK` message appears on the screen, before proceeding to the next step.

d. Enter **RDASOT<Return>** to initialize the RDASOT program. RDASOT Main Menu is displayed.

e. If using Redundant system, when Mode Selection Menu appears, enter **1<Return>** to select FULL mode, then proceed to step 2.

2. Perform the following steps to select recording of session on disk, tape, printer, or console:

a. Enter **1<Return>** on RDASOT Main Menu to select Record Maintenance Session Menu.

b. Enter one of the following:

| | |
|---|---|
| **1<Return>** | To select Log to Disk. |
| **2<Return>** | To select Log to Tape (SCSI). |
| **3<Return>** | To select Log to Printer (if available). |
| **4<Return>** | To select Log to Console Only. |

c. Enter **Ø<Return>** RDASOT Main Menu is displayed.

Table 4-54. Options in Control Receiver/Signal Processor

| OPTIONS | SOURCE | | | | | |
|---|---|---|---|---|---|---|
| | Radar | Klystron Drive | Klystron Output | CW | RF Noise | Delayed RF/CW |
| Inject signal | * | * | * | * | * | * |
| Change pulsewidth | * | * | * | | | * |
| Change pulse repetition frequency | * | * | * | | | * |
| Toggle XMTR waveguide switch | * | | | | | |
| Compute RSEC limits | * | | | | | |
| Toggle RCVR injection point | | * | * | * | * | * |
| Change RIOS (Receiver Interface Output Select) parameters | | * | * | * | * | * |

Table 4-54. Options in Control Receiver/Signal Processor (continued)

| OPTIONS | SOURCE | | | | | |
|---|---|---|---|---|---|---|
| | Radar | Klystron Drive | Klystron Output | CW | RF Noise | Delayed RF/CW |
| Change RF test attenuation | | * | * | * | * | * |
| Change HSP end around test path | | * | * | * | * | * |
| Toggle receiver protect | | * | * | * | * | * |
| Toggle interference suppress | | * | * | * | * | * |
| Change test A/D bandwidth | | * | * | * | * | * |
| Change range | | * | | | | * |
| Toggle AGC test select | | | | * | | * |

4-7.6.2 Diagnostic Test Procedure.

1. Perform the following steps to select diagnostic test:
   a. Enter **2<Return>** on RDASOT Main Menu to select Diagnostic Menu.
   b. Selection from the Diagnostic Menu will allow individual Test Control Menus to be displayed. Enter one of the following:

| | |
|---|---|
| **1<Return>** | To select DAUXDIAG Test Control Menu |
| **2<Return>** | To select UTILDIAG Test Control Menu |
| **3<Return>** | To select PEDLDIAG Test Control Menu |
| **4<Return>** | To select PSPXDIAG Test Control Menu |
| **5<Return>** | To select HWSPDIAG Test Control Menu |
| **6<Return>** | To select RECVDIAG Test Control Menu |
| **7<Return>** | To select XMITDIAG Test Control Menu |

2. Perform the following steps to select options for each individual test:

**NOTE**

The names of the Diagnostic Test Control Menus vary depending upon the option selected. In this procedure, references to those menus are referred to as *XXXX*DIAG Test Control Menu, with *XXXX* being a variable representing DAUX, UTIL, PEDL, PSPX, HWSP, RECV, or XMIT.

   a. Enter **2<Return>** on the *XXXX*DIAG Test Control Menu to display the Main Option Menu.
   b. Enter one of the following from the Main Option Menu:

| | |
|---|---|
| **1<Return>** | To select Error Control Options (Stop) Menu. |
| **2<Return>** | To select Error Display Options (On) Menu. |
| **3<Return>** | To select Loop Control Selection (1). |

c. If option 3 was selected to perform Loop Control, at the RDA XXXXDIAG prompt, enter Loop Count ***X*<Return>**, where *X*=1 - 9999.

d. If either option 1 or option 2 was selected, enter **Ø<Return>** from either Error Option Menu to select the Main Option Menu.

e. Enter **Ø<Return>** on Main Option Menu to select the *XXXX*DIAG Test Control Menu.

3. Perform the following steps to select subtests for each test:

a. Enter one of the following:

| | |
|---|---|
| **3<Return>** | To select all subtests. |
| **4<Return>** | To deselect all subtests. |
| **5<Return>** | To select individual subtests. |

b. If option 5 was entered to select individual subtests, enter **Ø<Return>** on Subtest Selection Menu to display the *XXXX*DIAG Test Control Menu.

**NOTE**

If option 3 to select all subtests, or option 4 to deselect all subtests have been executed, the display will automatically return to the *XXXX*DIAG Test Control Menu upon completion of that task.

4. After all options and subtest selections are made, perform the following steps to execute selected tests:

a. Enter **1<Return>** on *XXXX*DIAG Test Control Menu to select Begin Subtest Execution. Observe console screen for error messages.

b. Enter one of the following:

| | |
|---|---|
| **Ø<Return>** | To exit test and continue. |
| **TERM<Return>** | To end test. |
| **Error #<Return>** | To display the error message selected. |

c. When finished with test, enter **Ø<Return>** to go to *XXXX*DIAG Test Control Menu.

5. Perform the following steps to terminate RDASOT program and return system to normal operating conditions:

a. Enter **Ø<Return>** on *XXXX*DIAG Test Control Menu to display Diagnostic Menu.

b. Enter **Ø<Return>** on Diagnostic Menu to display Main Menu.

c. Enter **Ø<Return>** on Main Menu to terminate RDASOT.

d. Enter **KILLSOT<Return>** to clear all tasks from memory.

e. Enter **RDAUP<Return>** to start the application program. The RDA Main Menu is displayed.

4-7.6.3 Calibration Procedure. Perform the following procedure to select and execute the calibration tests.

**NOTE**

The calibration tests can be run independently. The following procedures will select and run each calibration test.

1. Perform RDASOT initialization procedure in paragraph 4-7.6.1 .
2. Perform the following steps to select and execute the complex spectrum measurements test:
   a. Enter **3<Return>** on RDASOT Main Menu to select Calibration Menu. The Calibration Menu is displayed.
   b. Enter **3<Return>** on Calibration Menu to select Complex Spectrum Measurement. The Complex Spectrum Process Menu is displayed.
   c. Enter **2<Return>** on Complex Spectrum Process Menu to select Parameter Selection. The Complex Spectrum - Parameter Selection Menu is displayed.
   d. Enter **1<Return>** on Complex Spectrum - Parameter Selection Menu to set Target Type. Complex Spectrum - Target Type Menu is displayed.
   e. Enter **1<Return>** on Complex Spectrum - Target Type Menu to set target to DKLY and display Complex Spectrum - Parameter Selection Menu.
   f. Enter **5<Return**> on Complex Spectrum - Parameter Selection Menu to set “Pulse Rept Int” and display Complex Spectrum - Pulse Repetition Interval Menu.
   g. Enter **2<Return>** on Complex Spectrum - Pulse Repetition Interval Menu to select “For End Ranges 332 to 340 KM.” Complex Spectrum - Parameter Selection Menu is displayed.
   h. Enter **9<Return>** on Complex Spectrum - Parameter Selection Menu to select “Set # of FFT Points” and display Complex Spectrum - Number of FFT Points Menu.
   i. Enter **1<Return>** on Complex Spectrum - Number of FFT Points Menu to set Number of FFT Points to 32. Complex Spectrum - Parameter Selection Menu is displayed.
   j. Enter **11<Return>** on Complex Spectrum - Parameter Selection Menu to set Window Function and display Complex Spectrum - Window Function Menu.
   k. Enter **3<Return>** on Complex Spectrum - Window Function Menu to select “Use Blackman Smoothing” and display Complex Spectrum - Parameter Selection Menu.

l. Enter **Ø<Return>** on Complex Spectrum - Parameter Selection Menu to select Return to Spectrum Process Menu. The Complex Spectrum Menu is displayed.

m. Enter **3<Return>** on Complex Spectrum Process Menu to select "I & Q Collection and Processing" and display Complex Spectrum Process Menu. The message `Waiting for Transmitter warm up delay of 8 seconds` is displayed.

n. Enter **4<Return>** on Complex Spectrum Process Menu to select "Display Complex Spectrum Products" and display Complex Spectrum - - Bin Selection menu.

o. Enter **1<Return>** on Complex Spectrum - - Bin Selection Menu to select "Process Bin 1 for Display" and display Complex Spectrum - - Product Display Menu - Bin 1 menu.

p. Enter **5<Return>** on Complex Spectrum - - Product Display Menu - Bin 1 menu to select "Unfiltered Phase Values in Degrees". `*** Unfiltered Table of Phase Values *** Valid Data ***` is displayed.

q. Enter **Ø<Return>** when all desired processing selections have been made. Complex Spectrum - - Product Display Menu - Bin 1 menu is displayed.

r. Enter **Ø<Return>** on Complex Spectrum - - Product Display Menu - Bin 1 menu to select Return to Bin Selection Menu. The Complex Spectrum - - Bin Selection Menu is displayed.

s. Enter **Ø<Return>** on Complex Spectrum - - Bin Selection Menu to select Return to Complex Process. The Complex Spectrum Process Menu is displayed.

t. Enter **Ø<Return>** on Complex Spectrum Process Menu to select Return to Calibration Menu. The Calibration Menu is displayed.

**NOTE**

Complex spectrum measurements execution is completed.

3. Perform the following steps to select and execute the generate clutter map function:

**CAUTION**

Before generating a new clutter map, the current clutter map RDACLUTT.DAT file should be renamed to RDACLUTT.OLD to preserve the original file in case problems occur in creating a new clutter map.

**NOTE**

Redundant sites should generate the clutter map on one channel and copy the new RDACLUTT.DAT file to the other channel.

a. Enter **1<Return>** on Calibration Menu to select Generate Clutter Map. System will ask `Has RDASC been started and put in standby state?`

b. Enter **Y<Return>** at RDASOT prompt to display Clutter Map Control Menu.

**NOTE**

If the RDA has not previously been started and put into the Standby state, the calibration data file needed to generate the clutter map will not be available. If this is the case, enter **N**, terminate the RDASOT, bring up the RDASC Program and enter **STBY**. Then, terminate the RDASC program, bring up the RDASOT program, and return to this step.

c. Enter **1<Return>** on Clutter Map Control Menu to select Display/Select Parameters. Parameter Selection Menu is displayed. The following default values are displayed for the notchwidth and two threshold values. If your site values are different from the default values, enter ***1***, ***2***, or ***3*** **<Return>** to select the value to be changed.

| | |
|---|---|
| Destination 8 Notchwidth | (0.5000 M/S) |
| Threshold 1 Value | (9.00 dBm) |
| Threshold 2 Value | (9.00 dBm) |

**NOTE**

The following step should be performed to view at what elevation angle the program will stop processing a new clutter map. The default value is to generate a clutter map up to and include Elevation Angle #4 (3.400 degrees). The 99.000 degrees value listed in Elevation Angle #5 instructs the program to stop after Elevation Angle #4. By selecting lower angles, the processing time takes considerably less time than the full 19 degrees in elevation. Sites with tall mountains in their scan area may require a higher elevation cut. Consult your lead meteorologist for the proper angle.

d. Enter **4<Return>** at the Parameter Selection menu to select Elevation Scan Table. The Elevation Angles Menu is displayed. Review the data in the Elevation Angles Menu to determine at what elevation angle the program will stop processing a clutter map. All angles up to the line with 99.000 degrees will be processed.

e. Enter **Ø<Return>** at the Elevation Angles Menu to select Elevation Angle Selection Complete. The Parameter Selection Menu is displayed.

f. Enter **Ø<Return>** at the Parameter Selection menu to select Parameter Selection Complete. The Clutter Map Control Menu is displayed.

g. Enter **2<Return>** on Clutter Map Control Menu to select Process Clutter Map. Processing is executed. This function takes approximately 2 to 6 hours. When

completed, the message `DO YOU WISH TO UPDATE FILE?` appears. Follow prompts to update the clutter file. When processing is finished, Clutter Map Control Menu is displayed.

h. Enter **Ø<Return>** on Clutter Map Control Menu to display Calibration Menu.

**NOTE**

Generate Clutter Map function is completed.

4. Perform the following steps to select and execute the suncheck measurements test:

   a. Enter **2<Return>** on Calibration Menu to select Suncheck Measurements. Suncheck Test Control Menu is displayed.

   b. Enter **1<Return>** on Suncheck Test Control Menu. Prompt is displayed to enter time. Test is executed.

   c. Enter **Ø<Return>** to terminate test. The test is terminated and Suncheck Test Control Menu is displayed.

   d. Enter **Ø<Return>** on Suncheck Test Control menu. Calibration Menu is displayed.

5. Perform the following steps to terminate calibration and RDASOT and return system to normal operating conditions:

   a. Enter **Ø<Return>** on Calibration Menu to display the Main Menu.

   b. Enter **Ø<Return>** on Main Menu to terminate RDASOT.

   c. Enter **RDAUP<Return>** to start application program. RDA Main Menu is displayed.

4-7.6.4 Maintenance Aids Procedure. Perform the following steps to select and execute the maintenance aid functions:

1. Perform the following preliminary steps:

   a. Perform step 1 in Table 6-13.

   b. Enter **STBY<Return>** on command line of RDA Main Menu.

   c. Enter **TERP <Tab>** ***password*** **<Return>** on the command and parameter lines.

   d. Press the **<Shift>** and **<Port>** keys **simultaneously** to switch to RDA System Console.

   e. At the RDA System Console, enter **RDASOT<Return>** to load RDASOT diagnostic program.

2. Perform the following steps to select and execute the Control Pedestal subfunction:

   a. At RDASOT Main Menu, enter **4<Return>** to select and display Manual Control and Display Menu.

   b. Enter **1<Return>** on Manual Control and Display Menu to select Control Pedestal. PEDMCD Function Selection Menu is displayed.

   c. Enter one of the following on PEDMCD Function Selection Menu:

      **1<Return>** displays the Pedestal Positions Menu. Pedestal Positions displays the current azimuth position and elevation position.

      **2<Return>** displays the Park Pedestal Position. Park Pedestal positions the pedestal to the azimuth and elevation park positions contained in adaptation data.

      **3<Return>** displays the Pedestal Manual Control Menu. Pedestal Manual Control selects 5 options to command AZ and EL positions, or AZ or EL rates, or display the rate and position.

   d. If Pedestal Manual Control was selected, enter **Ø<Return>** to terminate manual control. PEDMCD Function Selection Menu is displayed.

**NOTE**

If Pedestal Position (option 1) or Park Pedestal (option 2) were selected from PEDMCD Function Selection Menu, the menu is still displayed along with the positions that were displayed.

   e. Enter **Ø<Return>** on PEDMCD Function Selection Menu to display Manual Control and Display Menu.

   f. Enter **Ø<Return>** on Manual Control and Display Menu to display Main Menu.

**NOTE**

If further testing is necessary, perform steps 3, 4, or 5, as needed.

   g. Enter **Ø<Return>** on Main Menu to terminate RDASOT.

   h. At the RDA System Console, enter **RDAUP<Return>** to start application program. RDA Main Menu is displayed.

3. Perform the following steps to select and execute the Control Receiver/Signal Processor subfunction:

**NOTE**

Prior to performing the following steps, perform step 1 to terminate application program and start RDASOT.

a. Enter **4<Return>** on Main Menu to select and display Manual Control and Display Menu.

b. Enter **2<Return>** on Manual Control and Display Menu to select Control RCVR/SIGNAL PROC. TESTSIG Source Selection Menu is displayed.

c. Enter one of the following from TESTSIG Source Selection Menu to select test signal source. TESTSIG Source Selection Menu appears.

| | |
|---|---|
| **1<Return>** | All Sources Off |
| **2<Return>** | Radar Source |
| **3<Return>** | Klystron Drive Source |
| **4<Return>** | Klystron Output Source |
| **5<Return>** | CW Source |
| **6<Return>** | RF Noise Source |
| **7<Return>** | Delayed RF using CW Source |

**NOTE**

When individual TESTSIG Source Control Menu is displayed, parameters can be entered prior to executing test.

d. Enter **1<Return>** on Source Control Menu to select Inject Signal. Test is executed.

**NOTE**

When test is executed, information is displayed according to parameters selected from Source Selection and Source Control Menus.

e. Enter **Ø<Return>** on Source Control Menu to display TESTSIG Source Selection Menu.

f. Enter **Ø<Return>** on TESTSIG Source Selection Menu. The question `Do you wish to exit with synchronizer Running?` appears.

g. Enter **Y<Return>** to exit with synchronizer running. Manual Control and Display Menu is displayed.

h. Enter **Ø<Return>** on Manual Control and Display menu. Main Menu is displayed.

**NOTE**

If further testing is necessary, perform steps 2, 4, or 5, as needed.

i. Enter **Ø<Return>** on Main Menu to terminate RDASOT.

j. At the RDA System Console, enter **RDAUP<Return>** to start application program. RDA Main Menu is displayed.

4. Perform the following steps to select and execute the DAU BITE Display subfunctions:

**NOTE**

Prior to performing the following steps, perform step 1 to terminate application program and start RDASOT.

a. Enter **4<Return>** on Main Menu to select and display Manual Control and Display Menu.

b. Enter **3<Return>** on Manual Control and Display Menu to select DAU BITE Display. DAU Discrete Data Menu is displayed.

**NOTE**

Up to ten pages of DAU BITE Discrete Data can be displayed.

c. Enter **Ø<Return>** on DAU Discrete Data Menu page. Manual Control and Display Menu is displayed.

d. Enter **Ø<Return>** on Manual Control and Display Menu to display Main Menu.

**NOTE**

If further testing is necessary, perform steps 2, 3, or 5, as needed.

e. Enter **Ø<Return>** on Main Menu to terminate RDASOT.

f. At the RDA System Console, enter **RDAUP<Return>** to start application program. RDA Main Menu is displayed.

5. Perform the following steps to select and execute the Download PSP subfunction:

**NOTE**

Prior to performing the following steps, perform step 1 to terminate application program and start RDASOT.

a. Enter **4<Return>** on Main Menu to select and display Manual Control and Display Menu.

b. Enter **4<Return>** on Manual Control and Display Menu. Test is executed. `PSP DOWNLOAD START` and `PSP DOWNLOAD COMPLETE` is displayed. Manual Control and Display Menu is displayed.

c. Enter **Ø<Return>** on Manual Control and Display Menu to display Main Menu.

**NOTE**

If further testing is necessary, perform steps 2, 3, or 4, as needed.

d. Enter **Ø<Return>** on Main Menu to terminate RDASOT.

e. At the RDA System Console, enter **RDAUP<Return>** to start RDA application software. RDA Main Menu is displayed.

# Section 4-8. Emergency/Recovery Procedures

## 4-8.1 INTRODUCTION.

If an operating system or system console error condition is reported or exists in the RDA, perform the emergency/recovery procedures in this section. This section contains the following emergency/recovery procedures:

- Terminal malfunction or backup recovery procedure
- Software reinitialization (reboot) procedure
- Disk errors
- Power down reset
- Paused task recovery procedure

**NOTE**

This section refers to the RDADP as UD5, the Receiver as UD4, the Transmitter as UD3, and the Waveguide Pressurization Unit as UD6. Unless otherwise specified, the information also applies to redundant systems UD105, UD104, UD103, and UD106.

A description of OS/32 system information messages and OS/32 system fault messages is included in this section. Refer to Section 4-3 for error messages associated with operator input commands or operator data entry errors.

## 4-8.2 TERMINAL MALFUNCTION RECOVERY PROCEDURE.

An error may occur which renders the terminal inoperable. This error could be the result of transmission problems or operator errors. In any case, the terminal may be locked up or the screen does not receive a periodic update in the summary status area.

Perform the following steps to return the system back to an operable state.

1. Press **<Shift>** and **<Setup/Rest>** keys and observe whether terminal responds.
2. If terminal responds:
   a. Press **<Setup/Reset>** key.
   b. Skip remaining steps and return to normal operation.
3. If terminal did not respond, power down terminal and wait several seconds.
4. Power up terminal and observe whether normal conditions are present.
5. If recovery is not achieved after step 4, press the **<Break>** key.

**NOTE**

If the above procedure did not achieve recovery, perform the software reinitialization procedure in paragraph 4-8.3 .

4-8.3 SOFTWARE REINITIALIZATION (REBOOT) PROCEDURE.

The following procedure is to be used if the system appears to be inoperable due to errors that appear to be recoverable. The first step is to switch channels from the NWS Remote RDA Maintenance Terminal, the FAA Distant MSCF for redundant systems, or the MSCF workstation. Remember to enable local control from the MSCF workstation before visiting the equipment shelter. NWS redundant systems can perform the entire procedure from the NWS Remote RDA Maintenance Terminal. If this procedure does not recover system to an operable state, refer to fault isolation procedures in Chapter 6.

1. At the RDA Applications Terminal, **<Tab>** cursor to command entry line and enter **TERP <Return>**.
2. **<Tab>** cursor to parameter area and enter ***password*<Return>** to terminate application program.
3. Press the **<Shift>** and **<Port>** keys **simultaneously** to obtain the system console mode display.
4. Enter **ERR LOG,OFF<Return>** to turn off error logger.
5. Enter **MA DSCØ:,OFF<Return>** to mark off disk.
6. Enter **D TA<Return>** to display tasks.
7. If any tasks other than Time task are listed, cancel them by entering **CA *taskid* <Return>**.

**NOTE**

The above steps may not be able to be accomplished if the terminal does not respond. In this case, proceed to paragraph 4-8.2 .

8. At the RDA System Console:
   a. **Simultaneously** press the **<Ctrl>** and **V** keys twice and then **<Return>** to enter the CDS mode. The `CDS>` prompt is displayed.
   b. At the `CDS>` prompt, enter **INIT<Return>**.

**NOTE**

The operating system is initialized and the RDA maintenance terminal will be active so data can be entered.

9. If application program did not start up, enter **RDAUP<Return>** at the RDA System Console to start application software.

**NOTE**

The Main Menu should appear on console screen and the system is ready for operation. Refer to fault isolation procedures in Chapter 6 if reboot of processor failed to restore RDA to normal operation.

4-8.4 DISK ERRORS.

If a disk error occurs or if the disk cannot be marked on or off, refer to paragraph 4-3.2.2 and perform the Fastchek procedure to attempt recovery. If Fastchek procedure fails to achieve recovery, refer to fault isolation procedures in Chapter 6.

4-8.5 OS/32 ERROR DESCRIPTION.

This paragraph describes the OS/32 recoverable errors that can occur in the RDA. Also included are Table 4-55 and Table 4-56 which describe system information and system fault messages that provide the technician with insight to a possible maintenance problem. One type of system level error condition that can occur during operation of OS/32 is the recoverable error type. Recoverable errors should first be considered errors in operator entry. If that consideration proves to be false, the fault isolation procedures in Chapter 6 should be consulted. If a command is not acceptable to the system or an error condition is detected while processing a command, a message is displayed on the system console. Error descriptions are defined in Table 4-31. The general format of the message is:

***xxxx***=ERR TYPE=***yyyy*** POS=***zzzz***

where:

***xxxx*** is an error descriptor of up to four characters (such as MNEM, ALLO, IO, etc.).

***yyyy*** indicates the type of error encountered.

***zzzz*** represents the last command item processed. This field is most useful when multiple commands are entered on one line.

The error response to an unrecognized command is MNEM-ERR. All commands following an erroneous command on a command line are ignored if the command line is entered from the system console. If the command line is entered from a CSS, all commands are handled as if they were on individual command lines. If the particular command cannot be accepted because of the state of the system, the SEQ-ERR message is displayed.

Table 4-55. System Information Messages

| System Message | Explanation |
|---|---|
| CDIR FULL-*devn* | Indicates the secondary directory on disk devn is full. See the MARK command description for required action. |
| FLOATING POINT HARDWARE NOT PRESENT | Is a warning message that occurs if the operating system is sysgened with hardware floating point support, but at loading time, the operating system is loaded on a machine that does not support hardware floating point. In this case, the operating system will run, but it cannot successfully run programs requiring floating point support. |

Table 4-55. System Information Messages (continued)

| System Message | Explanation |
|---|---|
| I/O ERROR ON *voln*; MARK OFF AND CHECK BIT MAP ERROR ON *voln*; MARKOFF AND CGECJ | Indicates an I/O error on voln, the disk volume name. An I/O error is reported to the system when reading or writing a directory block, bit map sector, or volume descriptor (sector Ø). A bit map error is reported to the system console in the event of a bit map error; i.e., attempting to allocate an already allocated sector or volume, or attempting to release an already released sector.<br><br>When either of these errors occurs, any operations that require bit map changes are rejected with device unavailable status. This action permits read and write of preallocated contiguous files and read-only of the preallocated index files. An attempt to allocate or delete a file is rejected with device unavailable status. The operator is advised to run a disk check on that disk. |
| OS32MT*rr-uu* | Is printed after system initialization. The release level is rr; uu is the update level. |
| PIC NOT ACTIVE AT ADDRESS *XX* | When the operating system is generated, the precision internal clock (PIC) address is specified. At operating system start time, the operating system checks to see if the PIC is operational at the address. If not, the above message is displayed. The operating system continues to run, but without the PIC. |
| POWER RESTORE - RESET PERIPHERALS | Indicates that a power fail restore sequence has taken place; no operator response is required. |
| POWER RESTORE - RESET PERIPHERALS AND ENTER GO | Indicates that a power fail restore sequence has taken place; perform any manual intervention required at the peripheral device(s) and then type GO<Return> to complete the power recovery. |

Table 4-56. System Fault Messages

| System Message | Explanation |
|---|---|
| ACCESS LEVEL ADDRESS ERROR AT *xxxxxx (YYYYYY)* MEMORY FAULT ADDRESS = *xxxxxx (YYYYYY)* | Indicates that when memory access was attempted by the current program, the memory access level of the program status word (PSW) (bits 1Ø-11) contained a lesser value than the access level field of the appropriate segment table entry (STE). The program address is *xxxxxx* and the physical address is *YYYYYY*. The memory fault address is given on Series 3200 Processors. |
| ACCESS PRIVILEGE ADDRESS AT RR*xxxx (YYYYYY)* MEMORY FAULT ADDRESS = *xxxxxx (YYYYYY)* | Indicates that the user program tried to store into a write-protected segment, execute instructions from an execute-protected segment, or load from a read-protected segment. The program address is RR*xxxx*, the segmentation register is RR and the physical address is *YYYYYY*. The memory fault address is given on Series 3200 Processors. |
| ADDRESS FAULT IN SVC at *xxxxxx (YYYYYY)* | Indicates that the address of supervisor call (SVC) parameter block or an address parameter in the parameter block points to a data structure that is outside the task taskid memory allocation or does not point to a data structure that is properly aligned. |
| ALIGNMENT FAULT INSTRUCTION AT *xxxxxx (YYYYYY)* MEMORY FAULT ADDRESS = *xxxxxx (YYYYYY)* | Indicates that the data instruction is not properly aligned to specific fields for fullword or halfword alignment. The program address is *xxxxxx* and the physical address is *YYYYYY*. The memory fault address is the memory location that is not properly aligned and is given on Series 3200 Processors. |
| ARITHMETIC FAULT AT *xxxxxx (YYYYYY)* | Indicates that a fixed or floating point error is detected at location *xxxxx* in the taskid address space (physical address *yyyyyy*) or an attempt was made to divide by zero. This fault occurs only on 7/32 and 8/32 Processors. |
| DECIMAL OVERFLOW ERROR AT *xxxxxx (YYYYYY)* NEXT INSTRUCTION AT *xxxxxx (YYYYYY)* | Indicates that the result of a load packed decimal string as binary LPB instruction was too large to be stored as a binary number. The program address of the LPB instruction is *xxxxxx*; the physical address is *YYYYYY*. The instruction aborts and the next instruction is at *xxxxxx*. This fault occurs only on the Series 3200 Processors. |
| END OF TASK *n* | Indicates that the task taskid has ended. The end of task code in decimal is *n*. |
| EXECUTE PRIVILEGE ERROR AT *xxxxxx (YYYYYY)* MEMORY FAULT ADDRESS = *xxxxxx (YYYYYY)* | Indicates that an attempt was made by the current program to execute instructions for a segment that is execute-protected. The memory fault address is given on Series 3200 Processors only. |

Table 4-56. System Fault Messages (continued)

| System Message | Explanation |
|---|---|
| FIXED POINT-ZERO DIVIDE ERROR AT *xxxxxx (YYYYYY)* NEXT INSTRUCTION AT *xxxxxx (YYYYYY)* | Indicates that an attempt was made to divide by zero at location *xxxxxx* in the taskid address space (physical address *YYYYYY*). The current instruction is aborted and the next instruction is at location *xxxxxx* in the taskid address space (physical address *YYYYYY*). This error can occur only on the Series 3200 Processors. |
| FIXED POINT-ZERO OVERFLOW ERROR AT *xxxxxx (YYYYYY)* NEXT INSTRUCTION AT *xxxxxx (YYYYYY)* | Indicates that a fixed point arithmetic result, at location *xxxxxx* in the taskid address space (physical address *YYYYYY*), is too large to be represented. The instruction aborts and the next instruction is at location *xxxxxx* in the taskid address space (physical address *YYYYYY*). This error can occur only on the Series 3200 Processors. |
| FLOATING POINT - FUNCTION RANGE ERROR AT *xxxxxx* | Indicates that a task-related arithmetic fault has occurred because a floating point instruction operand at address *xxxxxx* is not within the valid range for the function. This message applies only to the 3280 System. |
| FLOATING POINT - UNDERFLOW ERROR AT *xxxxxx (YYYYYY)* NEXT INSTRUCTION AT *xxxxxx (YYYYYY)* | Indicates that the result of a floating point operation is too small to be represented at location *xxxxxx* in the taskid address space (physical address *YYYYYY*). The instruction is at location *xxxxxx* in the taskid address space (physical address *YYYYYY*). This error can occur only on the Series 3200 Processors. |
| FLOATING POINT - OVERFLOW ERROR AT *xxxxxx (YYYYYY)* NEXT INSTRUCTION AT *xxxxxx (YYYYYY)* | Indicates that the result of a floating point arithmetic operation is too large to be represented at location *xxxxxx* in the taskid address space (physical address *YYYYYY*). The instruction aborts and the next instruction is at location *xxxxxx* in the taskid address space (physical address *YYYYYY*). This error can occur only on the Series 3200 Processors. |
| FLOATING POINT - ZERO DIVIDE ERROR AT *xxxxx (YYYYYY)* NEXT INSTRUCTION AT *xxxxxx (YYYYYY)* | Indicates that an attempt was made to perform a floating point divide by zero at location *xxxxxx* in the taskid address space (physical address *YYYYYY*). The instruction aborts and the next instruction is at location *xxxxxx* in the taskid address space (physical address *YYYYYY*). This error can occur only on the Series 3200 Processors. |
| ILLEGAL INSTRUCTION AT *xxxxxx (YYYYYY)* | Indicates that an illegal instruction fault is detected at location *xxxxxx* in the taskid address space (physical address *YYYYYY*). |

Table 4-56. System Fault Messages (continued)

| System Message | Explanation |
|---|---|
| ILLEGAL SVC - INSTRUCTION AT *xxxxxx (YYYYYY)* SVC PARAMETER BLOCK AT *xxxxxx (YYYYYY)* | Indicates that an illegal SVC call was attempted at location *xxxxxx* in the taskid address space (physical address *YYYYY*). The SVC parameter block is located at location *xxxxxx* in the taskid address space (physical address *YYYYYY*). |
| INTERNAL REGISTER PARITY FAULT, INSTRUCTION AT *xxxxxx (YYYYYY)* | Indicates that a parity error machine malfunction is detected at location *xxxxxx* (physical address *YYYYYY*). This is an unrecoverable hardware-generated fault possibly due to faulty registers external (REX). This fault occurs only on Model 3203 and 3205 Processors. |
| INVALID SEGMENT ADDRESS ERROR AT *xxxxxx (YYYYYY)* MEMORY FAULT ADDRESS = *xxxxxx (YYYYYY)* | Indicates that the task tried to address a segment outside the address space of the program. The program address is *xxxxxx* and the physical address is *YYYYYY*. The memory fault address is given on Series 3200 Processors only. |
| I/O-ERR TYPE=*xxxx* SEGNAME=*YYYY* SEGTYPE=2222 | Indicates that an input/output (I/O) error type *xxxx* was encountered while trying to write the segment named *YYYY* to the roll volume. Task space is needed to load or roll in task *taskid*. Segment *YYYY* is set as nonrollable and the write error flag is set in the segment descriptor entry (SDE). To ensure full integrity of the segment, reload the pertinent module(s). |
| MAT PARITY FAULT, INSTRUCTION AT *xxxxxx (YYYYYY)* | Indicates that a memory address translator (MAT) parity error machine malfunction is detected at location *xxxxxx* (physical address *YYYYYY*). This is an unrecoverable hardware-generated fault possibly due to faulty MAT circuitry or a bad chip. This fault occurs only on Model 3203 and 3205 Processors. |
| MEMORY ERROR ON DATA FETCH AT *xxxxxx (YYYYYY)* MEMORY FAULT ADDRESS=*xxxxxx (YYYYYY)* | Indicates that an attempt was made to retrieve or to load data from a failing memory area. If affected memory is within task space and the operating system has memory diagnostic support, the affected page is automatically marked off and the following message is displayed:<br><br>`AFFECTED MEMORY PAGE MARKED OFF AT xxxxxx (YYYYYY)` |

Table 4-56. System Fault Messages (continued)

| System Message | Explanation |
|---|---|
| MEMORY ERROR ON INSTRUCTION FETCH AT *xxxxxx (YYYYYY)* MEMORY FAULT ADDRESS=*xxxxxx (YYYYYY)* | Indicates that an attempt was made to execute an instruction from a failing memory area on Series 3200 Processors. If affected memory is within task space and the operating system has memory diagnostic support, the affected page is automatically marked off and the following message is displayed:<br>`AFFECTED MEMORY PAGE MARKED OFF AT xxxxxx (YYYYYY)` |
| MEMORY PARITY ERROR AT *xxxxxx (YYYYYY)* | Indicates that a parity machine malfunction is detected at location *xxxxxx* of the taskid address space (physical address *YYYYYY*) on Model 7/32 and 8/32 Processors. This is an unrecoverable hardware-generated fault which is possibly due to bad memory circuitry. |
| NON-EXISTENT SEGMENT ERROR (PST) AT *xxxxxx (YYYYYY)* MEMORY FAULT ADDRESS=*xxxxxx (YYYYYY)* | Indicates an attempt was made to access a memory location greater than the maximum valid program address; i.e., an attempt to access a memory location outside of task space. The program address is *xxxxx* and the physical address is *YYYYYY*. The memory fault address is given on Series 3200 Processors. |
| NON-EXISTENT SEGMENT ERROR (SST) AT *xxxxxx (YYYYYY)* MEMORY FAULT ADDRESS=*xxxxxx (YYYYYY)* | Indicates that the current program has made reference to a non-existent segment in the shared segment table (SST). The program address that caused the fault is *xxxxxx*; the physical address is *YYYYYY*. If the non-existent segment is loaded, the instruction that caused the fault can be re-executed. The memory fault address appears on the Series 3200 Processors. |
| PACKED FORMAT-SIGN ERROR AT *xxxxxx (YYYYYY)* MEMORY FAULT ADDRESS=*xxxxx (YYYYYY)* | Indicates that an illegal sign digit was detected in a packed decimal number at location *xxxxxx* in the taskid address space (physical address *YYYYYY*) for Series 3200 Processors. |
| PACKED FORMAT-DATA ERROR AT *xxxxxx (YYYYYY)* MEMORY FAULT ADDRESS=*xxxxxx (YYYYYY)* | Indicates that a data error was detected in a packed decimal number at location *xxxxxx* in the taskid address space (physical address *YYYYYY*) for Series 3200 Processors. |

Table 4-56. System Fault Messages (continued)

| System Message | Explanation |
|---|---|
| READ PRIVILEGE ADDRESS ERROR AT *xxxxxx (YYYYYY)* MEMORY FAULT ADDRESS=*xxxxxx (YYYYYY)* | Indicates that an attempt was made by the current program to read from a segment that is read-protected. The memory fault address is given for Series 3200 Processors. |
| SEGMENT LIMIT ADDRESS ERROR AT RR*xxxx (YYYYYY)* MEMORY FAULT ADDRESS=*xxxxxx* | Indicates that the task attempted to access an address outside allowable limits for one of its segments. The program address is RR*xxxx*, segmentation register is RR and physical address is *YYYYYY*. The memory fault address is given on Series 3200 Processors only. |
| SVC ADDRESS ERROR-INSTRUCTION AT *xxxxxx (YYYYYY)* SVC PARAMETER BLOCK AT *xxxxxx (YYYYYY)* | Indicates that the address of the SVC parameter block at *xxxxxx* in the taskid address space (physical address *YYYYYY*) was incorrect. The SVC parameter block must be on a fullword boundary. |
| TASK PAUSED | Indicates that the task taskid paused. The pause results from an SVC2 code 1 or the operator PAUSE command. |
| UNDEFINED DATA FORMAT FAULT AT *xxxxxx (YYYYYY)* MEMORY FAULT ADDRESS=*xxxxxx (YYYYYY)* | Indicates that an undefined data format or alignment fault was detected at location *xxxxxx* in the taskid address space (physical address *YYYYYY*) for Series 3200 Processors. |
| WRITE PRIVILEGE ADDRESS ERROR AT *xxxxxx (YYYYYY)* MEMORY FAULT ADDRESS=*xxxxxx (YYYYYY)* | Indicates that an attempt was made by the current program to write to a segment that is write-protected. The memory fault address is given for Series 3200 Processors. |
| *taskid*> | Indicates an SVC1 read request to terminal device from task *taskid*. Data should be entered immediately to avoid blocking the terminal. |

4-8.6 POWER DOWN RESET.

The following procedure should be performed when the terminal fails the power-up self-tests and a Failure Status screen is displayed.

| Step | Procedure/Action | Response |
|---|---|---|
| 1. | At the RDA Applications Terminal, simultaneously press **<Ctrl>**, **<Shift>**, and **<Setup/Reset>** keys. | Failure Status screen is not displayed. |
| 2. | a. If terminal function is restored, skip remaining steps and return to normal operation. | |
| | b. If Failure Status screen is displayed again, simultaneously press **<Clear>**, **<Shift>**, and **<Ctrl>** keys. | Failure Status screen is not displayed. |
| | c. If Failure Status screen is displayed again, refer to fault isolation flowcharts in Section 6-3 . Otherwise, return to normal operation. | |

4-8.7 PAUSED TASK RECOVERY PROCEDURE.

The following procedures should be performed if a task has paused during normal operation.

| Step | Procedure/Action | Response |
|---|---|---|
| | **NOTE**<br>All entries are made and all responses occur at the System Console unless otherwise indicated. | |
| 1. | a. Enter **D M <Return>**. | Memory map of tasks is displayed. |
| | b. Verify whether any tasks are paused (indicated by a “P” in 7th column (STAT FIELD)) | |
| 2. | a. Enter **T *Taskid* <Return>**. (Taskid is the name of paused task) | |
| | b. Enter **CO <Return>** to restart task. | |
| 3. | a. Enter **D M <Return>**. | Memory map of tasks is displayed. |
| | b. Verify that paused task is no longer paused. | |
| 4. | If task is no longer paused, skip remaining steps and return to normal operation; otherwise, proceed to step 5. | |
| 5. | a. At the RDA Applications Terminal, enter: **TERP<Tab> *password* <Return>** | Message `TERP Accepted` is displayed and software program terminates. |
| | b. Press the **<Shift>** and **<Port>** keys **simultaneously** to access the RDA System Console. | |

| Step | Procedure/Action | Response |
|---|---|---|
| 5. Cont. | c. At the RDA System Console, enter: **RDAUP <Return>**. | `RDA SOFTWARE IS LOADED AND STARTED` is displayed at System Console, and RDA Main Menu is displayed at Applications Terminal. |
| 6. | Repeat step 3. | |
| 7. | If task is no longer paused, skip remaining steps and return to normal operation; otherwise, proceed to step 8. | |
| 8. | a. At the RDA Applications Terminal, enter: **TERP<Tab> *password* <Return>**<br>b. Press the **<Shift>** and **<Port>** keys **simultaneously** to access the System Console. | System console indicates that software tasks are cancelled. |
| 9. | a. Enter **ERR LOG,OFF <Return>** to turn off error logger.<br>b. Enter **MA DSCØ:,OFF <Return>** to mark disk off. | |
| 10. | If disk will not mark off, perform the following steps:<br>a. Enter **D M <Return>**.<br>b. Verify that all tasks (except time) are cancelled.<br>c. If any task is not cancelled, enter **CA *task name* <Return>**. | |
| 11. | At the RDA System Console,<br>a. Simultaneously press the **<Ctrl>** and **V** keys twice, then press **<Return>** to enter the CDS mode.<br>b. Enter **HALT <Return>**.<br>c. Enter **PO OFF <Return>**.<br>d. Enter **PO ON <Return>**. | System console displays that software is initializing, and application terminal displays Main menu. |
| 12. | If task is still paused, refer to Section 6-3 for fault isolation. | |

# CHAPTER 5

# THEORY OF OPERATION

## Section 5-1. Introduction

5-1.1 GENERAL.

Chapter 5 contains the descriptions of the Radar Data Acquisition (RDA) Group equipment with emphasis on the primary signal flow. It is structured to provide the theory of operation for each RDA functional group in the WSR-88D from basic to more complex information. The text refers to the functional diagrams provided which consist of a top-level RDA Group Block Diagram, Group Functional Block Diagrams (FBDs), and detailed Functional Flow Diagrams (FFDs). These diagrams are nested and interrelated so that functional continuity is provided between diagrams at the same level (FBDs or FFDs) and also between any FBD and its subordinate FFD(s). The level provided in both the text and the functional diagrams is based on the expected maintenance activity data requirements which vary from function to function. FBDs are provided for all functions. FFDs are provided where detailed functionality and/or interface data is required to support troubleshooting. No FFD is provided where detailed data is available in a subordinate commercial manual, such as the transmitter and the Antenna/Pedestal, or where a more detailed level of disclosure is not required. In this case, all required assembly interface data needed for troubleshooting is provided on the FBD itself or by reference to the Chapter 7 reference drawings. Additional information related to diagnostics and troubleshooting is provided in Chapter 6. National Weather Service (NWS) and Federal Aviation Administration (FAA) redundant systems contain two channels, one is known as Channel 1 which consists of UD105, UD104, UD103, and UD106 and the other is known as Channel 2 which consists of UD5, UD4, UD3, and UD6.

**NOTE**

This chapter and its corresponding sections refer to the RDADP (RDA Data Processor) as UD5, the Receiver as UD4, the Transmitter as UD3, and the Waveguide Pressurization Unit as UD6. Unless otherwise specified, the information also applies to redundant systems UD105, UD104, UD103, and UD106.

5-1.2 CHAPTER ORGANIZATION.

Chapter 5 is organized into the following sections:

- Section 5-1 Introduction
- Section 5-2 RDA Group Block Diagram Description
- Section 5-3 Transmitter Functional Block Diagram Description
- Section 5-4 Receiver Functional Block Diagram Description
- Section 5-5 HSP Functional Block Diagram Description

- Section 5-6 PSP Functional Block Diagram Description
- Section 5-7 RDASC Processor Functional Block Diagram Description
- Section 5-8 VMEbus to Concurrent I/O Bus Interface (VCI) Functional Block Diagram Description
- Section 5-9 RDA Status and Control Interface
- Section 5-10 Microwave Distribution
- Section 5-1 1 Antenna Positioning Electronics
- Section 5-12 Power Distribution
- Section 5-13 Redundant Switching
- Section 5-14 Control RDA Program Function

A description of each section is provided in the following paragraphs.

5-1.2.1 Section 5-1 , Introduction. This section discusses the RDA theory of operation sections in Chapter 5 and describes the tasks implemented by the RDA. Also provided are references to RDA auxiliary systems and equipment maintenance manuals.

5-1.2.2 Section 5-2 , RDA Group Block Diagram Description. This section describes the functioning of the RDA at the level of an overall block diagram.

5-1.2.3 Section 5-3 , Transmitter Functional Block Diagram Description. This section describes the functioning of the transmitter at the functional block diagram level.

5-1.2.4 Section 5-4 , Receiver Functional Block Diagram Description. This section describes the functioning of the receiver at the functional block diagram level and the functional flow diagram level.

5-1.2.5 Section 5-5 , HSP Functional Block Diagram Description. This section describes the functioning of the HSP at the functional block diagram level.

5-1.2.6 Section 5-6 , PSP Functional Block Diagram Description. This section describes the functioning of the PSP at the functional block diagram level.

5-1.2.7 Section 5-7 , RDASC Processor Functional Block Diagram Description. This section describes the functioning of the RDASC processor at the functional block diagram level.

5-1.2.8 Section 5-8 , VMEbus to Concurrent I/O Bus Interface (VCI) Functional Block Diagram Description. This section describes the function of the VMEbus subsystem and the wideband communication interface at the functional block diagram level.

5-1.2.9 Section 5-9 , RDA Status and Control Interface. This section describes the functioning of the data acquisition unit (DAU) interfacing with the RDASC processor at the functional block diagram level and at the functional flow diagram level.

5-1.2.10 Section 5-10 , Microwave Distribution. This section describes the functioning of the microwave distribution equipment at the functional flow diagram level.

5-1.2.11 Section 5-11, Antenna Positioning Electronics. This section describes the functioning of the antenna positioning system at the functional block diagram level.

5-1.2.12 Section 5-12 , Power Distribution. This section describes the functioning of the power distribution within the RDA at the functional block diagram level and the functional flow diagram level.

5-1.2.13 Section 5-13 , Redundant Switching. This section describes the relay switching process that occurs once the command to switch channels takes place to provide a path from the controlling channel to all its corresponding equipment.

5-1.2.14 Section 5-14 , Control RDA Program Function. This section describes the function of the RDA program which is used to process the responses to the central control command.

## 5-1.3 RDA TASKS.

The RDA Group has been designed to implement the following tasks:

- Generate and transmit a beam of pulsed RF energy
- Provide for moving the beam in a prescribed pattern through the volume of interest
- Process returning RF echoes to transform their amplitude and phase information to video form
- Eliminate ground clutter and interference
- Use the stream of clutter and interference-free digitized video to calculate reflectivity, velocity, and spectrum width

## 5-1.4 RDA AUXILIARY SYSTEMS.

The RDA auxiliary systems provide the site security, waveguide air pressure, fire detection, temperature control, and power generation and distribution functions. Each of the auxiliary systems provides input data to the RDA data processor (RDADP) and operates under automatic control with the exception of the radome heating function. Radome heating is thermostatically controlled and is provided for technician comfort during maintenance on the pedestal in cold weather and is not required for equipment stability. The number of radome heaters is site dependent and can range from none to three. The power to each 10 kW radome heater is manually controlled from a three-phase circuit breaker in the RDA equipment shelter or a disconnect switch in the radome. Functionally, the auxiliary systems are grouped as follows:

- Heating, Ventilation, and Air Conditioning (HVAC)
- Fire Detection/Suppression System
- Power Generation and Distribution System

- Security System
- Waveguide Pressurization System

A detailed description of the RDA auxiliary systems listed above is located in the Real Property Installed Equipment Group Manual, NWS EHB 6-550 or NWS EHB 6-553 for redundant systems.

5-1.5 REFERENCE DOCUMENTATION.

The RDA reference documentation material provides additional detailed descriptions of specific equipment discussed in Chapter 5. The reference documentation is listed below:

- NWS EHB 6-511 WSR-88D Transmitter Field Maintenance Manual
- NWS EHB 6-513*/NWS EHB 6-514* WSR-88D Antenna Positioning System Field Maintenance Manual
- NWS EHB 6-545 WSR-88D Wideband Communications Equipment Maintenance Manual

- - - - -

* Site dependent

# Section 5-2. RDA Group Block Diagram Description

5-2.1 INTRODUCTION.

This section discusses the WSR-88D RDA Group at the overall block diagram level. Throughout this section, refer to Figure FO5-1, RDA Group Block Diagram for single channel systems or Figure FO5-2 for Redundant systems. The RDA Group functions discussed in this section are listed as follows:

- Transmitter
- Receiver
- Antenna
- Antenna Positioning Electronics
- RDA Status and Control Interface
- VMEbus to Concurrent I/O Bus Interface
- Hardwired Signal Processor (HSP)
- Programmable Signal Processor (PSP)
- RDA Status and Control (RDASC) Processor

**NOTE**

This section refers to the RDADP as UD5, the Receiver as UD4, the Transmitter as UD3, and the Waveguide Pressurization Unit as UD6. Unless otherwise specified, the information also applies to redundant systems UD105, UD104, UD103, and UD106.

5-2.2 TRANSMITTER.

The transmitter (Figure FO5-1, sheet 1, or Figure FO5-2, sheet 1) develops a 1.57 to 5 microsecond shaped long or short pulse at a frequency of 2.7 to 3.0 GHz. This high power radio frequency (RF) pulse of 750 kW is sent to the antenna/pedestal for propagation into the atmosphere.

5-2.2.1 Control and Monitoring. The control and monitoring function receives triggers and gates from the hardwired signal processor (HSP) synchronization circuits and high voltage (HV ON) and antenna command (ANT CMD) signals from the data acquisition unit (DAU) in the RDA Status and Control Interface function. It sends RF triggers and control signals to the high power modulator and timing triggers to the RF amplification circuits. It receives and collects fault and status data from modulation circuits, RF amplification circuits, and power and low voltage distribution circuits. The transmitter monitoring data is sent to the RDASC processor function via the RDA Status and Control Interface function as the transmitter status data word.

1. Transmitter Supervision. Control and monitoring supervises the operation of the transmitter, provides metering for selected transmitter voltage and currents, monitors transmitter status, and interfaces the transmitter to equipment outside of the transmitter cabinet. Control and monitoring sends 8-bit data words to the RDADP when they are selected by the 3-bit data select address. Data words include eight digital words that contain fault information. Three transmitter status bits are also monitored by the RDADP. These status bits indicate when the transmitter high voltage is on, when the transmitter has experienced a fault that could not be cleared, and when the transmitter is available to be placed on-line under system control.

2. Transmitter-Related Faults Checks. Control and monitoring continuously checks for transmitter-related faults and monitors the status of both internal and external interlock switches. In addition to sending this information to the RDADP, control and monitoring uses fault and interlock information to prevent undesirable control actions and to turn off transmitter high voltage when potentially damaging conditions occur. Transmitter fault data is also available via the FAA Remote Monitoring Subsystem (RMS).

3. Timing Triggers and Remote Control Command. Control and monitoring distributes timing triggers and remote control commands from the RDADP to other parts of the transmitter. It also distributes all low voltage DC from the power and low voltage distribution circuits to the modulator and RF amplifier.

5-2.2.2 Power and Low Voltage Distribution. The power and low voltage distribution circuits receive 120/208 Vac from the site power source and develop the necessary DC voltages for operation of the transmitter. Power fault and status data are sent to control and monitoring circuits. Fault data is also supplied to the FAA Remote Monitoring Subsystem (RMS).

5-2.2.3 Modulator. The line-type modulator provides the beam power (cathode pulse) for the klystron. The modulator develops approximately a -2.4 kV modulation pulse by charging a pulse forming network (PFN) with a controlled amount of energy and then discharging that stored energy to a step-up pulse transformer located in the RF amplifier. The charge stored in the PFN is closely regulated to ensure pulse-to-pulse amplitude stability of the klystron modulator pulse. Power and low voltage distribution circuits provide the modulator with three-phase AC operating voltage. Control and monitoring provides the modulator with control signals, triggers for synchronization, and low voltage DC signals. The modulator sends selected voltage and current samples and modulator faults to control and monitoring. Fault data is also supplied to the FAA Remote Monitoring Subsystem (RMS).

5-2.2.4 RF Amplification. The RF amplifier is a klystron that requires four inputs: RF drive (7.5 watts), filament current, modulation pulse, and vacuum pump voltage. Control and monitoring provides the RF amplifier with control signals, triggers that synchronize its operation to the system pulse repetition frequency (PRF), and low voltage DC operating voltages. The modulation pulse from the modulator is the source of the klystron cathode pulse. The RF amplifier provides control and monitoring with selected voltage and current samples, fault signals, and control signals. A klystron drive sample is sent to the RF test signal selection and control circuits in the receiver. Fault data is also supplied to the FAA Remote Monitoring Subsystem (RMS).

5-2.2.5 High Power Microwave Distribution. The high power RF output of 750 kW is sent through the microwave distribution circuits to the antenna for transmission. A directional coupler located outside of the transmitter cabinet in the waveguide structure provides the RF amplifier with a detected sample of the reflected power for voltage standing wave ratio (VSWR) fault monitoring. The microwave distribution provides a signal from an antenna RF power monitor to the analog status data monitoring circuits in the RDA status and control interface and a high power RF pulse sample to RF Test Signal Selection and Control function in the receiver. Fault data is also supplied to the FAA Remote Monitoring Subsystem (RMS).

5-2.2.6 Waveguide Pressurization Unit. The waveguide pressurization unit provides the pressurization for the waveguide to decrease chances for it to arc.

5-2.3 ANTENNA.

At Antenna/Feed 2A2, Figure FO5-30, the high power RF pulse is routed to Feed Assembly A1. This specially designed integral assembly is functionally composed of an orthogonal mode transducer (OMT) and feed horn. The OMT directs a horizontal linear polarized high power RF pulse to the feed horn which then directs the pulse toward a parabolic reflector. The reflector focuses the incident energy into an approximate one-degree pencil beam which is radiated into space. The RF echo return hits the reflector and is focused back into the feed horn. The RF return passes through the OMT and is routed via waveguide to the receiver front end.

5-2.4 RECEIVER.

The receiver function consists of the receiver front end (part of the receiver channel), located in Antenna/Pedestal UD2, and Receiver UD4. The WSR-88D Receiver, UD4, contains all of the modules and circuitry necessary for the detection and conversion of the returned RF energy into a complex, phase-coherent analog (video) signal (Figure FO5-4, sheet 1). This in-phase (I) and quadrature (Q - 90° shifted) video contains the echo return amplitude and phase information needed for base data generation. Along with the I and Q video, a log video signal is developed in the receiver. Log video is used to provide a wide dynamic range automatic gain control (AGC) function and also supports the interference detection function. The I, Q, and log video are sent to the A/D converter assembly where it is converted to digital data, purged of ground clutter, and converted to radial base data. The receiver function also sends samples of signals (in digital format) from various internal monitor points to the signal processor (HSP and/or PSP). The signal processor takes this data and calculates parameters needed for receiver calibration. In addition, the signal processor uses this data for performance monitoring and fault localization (PM/FL). The receiver also provides the transmitter RF excitation drive signal, along with the stable local oscillator (STALO) and coherent oscillator (COHO) detection reference signals. Another primary function of the signal processor is to provide synchronization to the transmitter, the receiver, and for the signal processing function itself. This is accomplished using control data from the RDASC processor and timing signals from the master clock located in the receiver. Receiver UD4 provides five functions: receiver channel, master signal generation, interference detection, RF test signal generation, and RF test signal processing.

5-2.4.1 Receiver Front End. A receiver protector within the receiver front end blocks the high energy transmission from damaging the sensitive receiver. The receiver front end also filters and amplifies the returns prior to sending them down from the tower to the receiver cabinet.

5-2.4.2 Receiver Channel. The receiver channel contains all of the modules and circuitry necessary for the detection and conversion of the returned RF energy into a complex, phase-coherent digital video signal. This I and Q video contains the echo return amplitude (for reflectivity) and phase (for velocity) information needed for base data generation.

5-2.4.2.1 AGC Function. To provide a wide dynamic range AGC function within the receiver channel, the I and Q video are in log-video scaling rather than linear scaling. The AGC position data is, therefore, also sent to the HSP for interpretation of the I and Q scaling by the reflectivity computations.

5-2.4.2.2 A/D Converter. The A/D converter located in the receiver converts the analog video to digital video and sends the I, Q, and log serial video to the HSP. Test samples are sent to the receiver status monitoring function for monitoring of the receiver channel.

5-2.4.3 Master Signal Generator (MSG). The master signal generator provides a 9.6 MHz clock to the HSP which, in turn, develops the triggers and gates for the transmitter. The synchronizer unit also sends an RF gate to the master signal generator which then sends the RF drive signal to the transmitter.

5-2.4.3.1 Master Signal Generation. The MSG function produces two other critical frequencies. One, the STALO frequency, is an RF signal which is used in the receiver channel to convert the echo RF to an intermediate frequency (IF). The other, the COHO frequency, is a signal which is phase-coherent with the transmitted signal and is the IF that a Doppler-free return would produce. The COHO is used to convert the received IF to video.

5-2.4.3.2 RF Frequency Generator. The RF frequency generator uses the RF gate as control when the RF (drive) frequency is sent to the transmitter. The RF (drive) frequency is only sent when the transmitter needs it to generate and transmit the RF pulse. The RF frequency drive signal is not sent during the dead time between transmitted pulses. The RF frequency drive signal is adjustable to any assigned frequency within the 2.7 GHz to 3.0 GHz operating band. Frequency selection to the assigned frequency is made by means of plug-in crystal oscillators. This output RF drive (carrier) frequency signal can be phase-shifted with respect to the corresponding STALO signal frequency. During operation, by giving each transmitted pulse a pseudo-random phase, it is possible to identify multiple time-around returns. During the test mode, the RF test signal is sent to the RF Test Signal Selection and Control function. Control functions are exercised over the MSG function through the receiver control data bus. Fault information is sent to the Receiver Status Monitoring function. This information is also supplied to the FAA Remote Monitoring Subsystem (RMS).

5-2.4.4 Interference Detection. Interference detection is based on a comparison of the power in the COHO-tuned IF of the echo with the power in each of two guard bands: one tuned slightly higher than the COHO and the other tuned slightly lower than the COHO. Too much power in either guard band is interpreted as interference and a flag is sent to the HSP instructing it to ignore the incoming data as invalid.

5-2.4.5 RF Test Signal Generation. This function selects one of four RF test signals, provides attenuation appropriate to the signal selected, and sends it on to one of the two test signal injection points. The source selection, attenuation amount, and destination selection are all controlled by the HSP.

5-2.4.6 RF Test Signal Processing. This function multiplexes data from many sample and monitor points throughout the RDA Group and prepares them for the HSP. Preparation includes converting RF and IF to video and then to digital.

## 5-2.5 ANTENNA POSITIONING ELECTRONICS.

The antenna (Figure FO5-1, sheet 1 or Figure FO5-2, sheet 1) is moved relative to its mounting pedestal by elevation and azimuth drive motors. Their servo rates and control data originate in the RDASC processor and are interpreted and applied by the servo control microprocessor and the azimuth (AZ) and elevation (EL) servo loop electronics. Encoders sense actual antenna position and feed this data back through the AZ and EL servo loop electronics and the servo control microprocessor to the RDASC processor. This feedback enables the RDASC to adjust the rates and commands to the drive motors based on a comparison between the desired position and the actual position so that scanning proceeds as programmed. Normal operation is continuous azimuth rotation (at 5 RPM in precipitation mode) and once per revolution, an incremental step in elevation between the limits of -1 and +20 degrees. Discrete bit status and fault monitoring data are sent via the monitoring circuits and the servo control microprocessor to the RDASC processor. Status and fault data is available via the FAA Remote Monitoring Subsystem (RMS).

5-2.5.1 Servo Control Microprocessor. The servo control microprocessor acts as the control interface between the RDASC processor and the antenna positioning circuits. It communicates with the RDASC processor via the RDASC/servo interface and controls the operation of the servo loop electronics, servo status and fault monitoring, and antenna position data interface.

5-2.5.2 Servo Antenna Position Data Interface. The servo antenna position data interface uses encoders on the antenna drive axis to sense the actual position of the antenna in elevation and azimuth. This data is sent to the servo control microprocessor for transfer to the RDASC processor.

5-2.5.3 Servo Loop Electronics. The servo loop electronics processes command signals from the RDASC processor (via the servo control microprocessor) and develops the position, rate, and acceleration drive signals necessary to control the antenna’s motion in azimuth and elevation.

5-2.5.4 RDASC/Servo Interface. The RDASC/servo interface connects the servo control microprocessor with the RDASC processor via a serial data link. It sends fault and status information, along with rate and velocity data, to the RDASC processor, and receives rate command data from the RDASC.

5-2.5.5 Peripheral Interface Adapter. The peripheral interface adapter receives status signals from monitoring points within the pedestal assembly and status error signals from the Power Amplifier UD5A7. It stores these signals and transfers them to the Digital Control Unit (DCU) UD5A6 microprocessor as requested.

## 5-2.6 RDA STATUS AND CONTROL INTERFACE.

The RDA status and control interface (Figure FO5-1, sheet 1, or Figure FO5-2, sheet 2) contains the DAU and interfacing circuits that link the RDASC with the transmitter, receiver, antenna positioning electronics, and environmental sensors of the tower utilities. It gathers fault alarms and status data

from the RDA group, multiplexes it, and sends it to the RDASC via an RS-232 serial link. The data gathered by the interface is in the form of analog, digital, and parallel binary words. The RDASC also sends serial data that contains mode commands for the antenna positioning electronics, the transmitter, and the auxiliary power generation system. RDA status and fault alarm data is available via the FAA Remote Monitoring Subsystem (RMS).

5-2.6.1 Analog Status Data Monitoring. The Analog Status Data Monitoring function receives analog currents and voltages from monitoring devices located throughout the RDA. Each voltage or current is proportional to the magnitude of the parameter being sampled. Parameters sampled include shelter and radome temperatures, power supply voltages, transmitter RF power, etc. This data is sent to the DAU/RDASC status data interface.

5-2.6.2 Discrete Status Data Monitoring. The discrete status data monitoring function gathers all the discrete bit data from status and fault contacts located throughout the RDA. These discretes represent the status of the power generation, air conditioning, fire protection, and security monitoring equipments. This data is sent to the DAU/RDASC status data interface.

5-2.6.3 DAU/RDASC Status Data Interface. The DAU/RDASC status data interface receives data from the Discrete and Analog Status Data Monitoring functions and a status data word from the transmitter upon request. The collected data are multiplexed and transmitted to the RDASC processor via a serial data link. This interface function also contains a master timing function which provides timing signals for the entire DAU.

5-2.6.4 RDASC/DAU Command Data Interface. The RDASC/DAU command data interface receives command data from the RDASC processor via a serial data link and distributes it to the transmitter and antenna position electronics functions.

In redundant systems, the two RDASC processors transmit data between each other via the RDA interprocessor channel which consists of a serial link implemented using a 8-line COMM MUX. This data is transmitted across the interface in either direction. Only the controlling channels RDASC/DAU command data interface has access to the antenna position electronics. Channel 1 RDASC/DAU command data interface contains all the switching functions which determine which channel is the controlling channel.

## 5-2.7 HARDWIRED SIGNAL PROCESSOR (HSP).

The HSP (Figure FO5-1, sheet 2 or Figure FO5-2, sheet 3) converts the I and Q video signals from logarithmic to linear scaling, suppresses ground clutter, and provides synchronization and interface control functions. The inputs are:

- I and Q video, scaled logarithmically and in serial digital form from the receiver channel
- AGC position data relating the amount of attenuation applied to the incoming I and Q data from the receiver channel
- Digitized map of ground clutter sources from the RDASC via the PSP

- Interference tag (when applicable) from the interference detection circuits of the receiver
- Log video from the receiver AGC circuits. This signal is linearized and sent to the PSP, but is not used at the present time.

The program which processes these inputs is not itself an input to the HSP. Unlike those processors for which their programs are an input, the HSP program was designed into its circuits and is not variable in the field except by hardware replacement. The HSP outputs a stream of linear, digitized I and Q video echo samples for successive range cells along successive radials of the sweeping beam. I and Q video represent the amplitude and (COHO relative) phase of the echo samples. Provision is made for interference and ground clutter suppression.

5-2.7.1 Video Prescaling. The I and Q video signals are converted from log to linear format in the video prescaling area. First, they are converted from serial to parallel form. Next, they are multiplied by a variable which compensates for the attenuation applied by the AGC function. Since attenuation involves dividing the original signal by a factor proportional to the amount of attenuation, multiplying the resultant signal by the same factor will restore it to its full, pre-attenuation size. The overall result is that the A/D converter is able to handle large signals because they are attenuated by the AGC function preceding the A/D converter. Now, after restoration in the HSP, numbers proportional to the full strength signal are available for reflectivity calculations.

5-2.7.2 Ground Clutter Suppression. The HSP suppresses ground clutter, that is, radar returns from non-weather features of the environment such as mountains and buildings. The basis for rejecting ground clutter while keeping the weather target returns is the difference between the clutter's lack of a Doppler frequency shift and the weather target's often appreciable Doppler shift. Notch filters are used to eliminate low Doppler shift. Notch filters are used to eliminate low Doppler returns from directions and ranges "learned during calibration" to possess clutter-causing targets. The filters are of three different bandwidths to permit suppressing not only stationary targets but also fluttering ones, such as trees and flags. Low elevation weather targets which are nearly stationary, or moving tangentially to the site, or falling across the radar beam, may also be suppressed along with the clutter.

5-2.7.2.1 Cold Startup. For each site, at cold startup, the clutter areas around the site are stored digitally on a map indicating whether each map region should have a filter applied or have filtering bypassed. Also stored for each area is a code for using a narrow, medium, or wide filter notch, if needed. The map is stored digitally in the RDASC. The operator can alter either the bypass data or the notch width data.

5-2.7.2.2 Clutter Map Information. During use, the clutter map information necessary for the current radial is passed from the RDASC, via the PSP, to the HSP where the ground clutter suppression is implemented. In this way, stationary and near-stationary ground clutter is removed while most weather information is retained for passage onto the PSP.

5-2.7.3 Receiver and Transmitter Synchronization. The synchronization function of the HSP supplies triggers and gates for the transmitter and an RF gate to the master signal generator in the receiver.

5-2.7.4 Interference Flag Processing. When an INTERFERENCE FLAG is sent to the HSP it means the receiver's interference detection has detected interference and the I and Q video samples coming from the receiver channel will be ignored because they were judged to be not related to weather conditions.

5-2.7.5 HSP Timing and Control. The control interface provides links throughout the RDA. It sends controls to the receiver channel, clutter filter, A/D converter, synchronization, prescaler, and the PSP. These controls coordinate the activities of the various functional areas.

5-2.7.6 Receiver Control Data Generation. The Receiver Control Data Generation function receives control interface (CI) write (WR) data and timing and control signals from the timing and control function. It generates control data and clocks for transmission to the receiver. It also generates status data download timing which is used to clock the receiver status data out of the receiver status and monitoring function to the HSP and Receiver Status Data Collection function (refer to paragraph 5-2.7.8 ).

5-2.7.7 Receiver and HSP Test Data Generation. The Receiver and HSP Test Data Generation function receives CI WR data and timing and control signals from the timing and control function. It generates I, Q, and log serial test video and test AGC position data for the Video Prescaling function, a test tag for the Interference Tag Processing function, and A/D converter test/bias data, and AGC test data for the receiver.

5-2.7.8 HSP and Receiver Status Data Collection. The HSP and Receiver Status Data Collection function receives CI WR data and timing and control signals from the timing and control function. It generates test monitoring timing signals which tell the Receiver Status Monitoring function in the receiver the signals to monitor and accepts the monitored receiver status data. It also monitors test data from throughout the HSP. The HSP and receiver status data are sent over the PSP input data bus to the RDASC processor in response to data requests received over the BFR read address bus.

## 5-2.8 PROGRAMMABLE SIGNAL PROCESSOR (PSP).

The PSP (Figure FO5-1, sheet 2 or Figure FO5-2, sheet 3) performs the following functions:

- Input Signal Selection and Distribution (ISSD)
- Arithmetic Unit (AU)
- Arithmetic Control Unit (ACU)
- Input-Output Controller (IOC)
- Standard Maintenance Interface (SMI)

5-2.8.1 PSP Inputs. The PSP receives from the HSP a time series of I and Q video pairs which carry the amplitude and phase information of the radar echo. It also receives from the RDASC processor the following:

- Surveillance cut echo power for resolving ambiguous ranges of Doppler cuts

- Wind profile data for resolving ambiguous velocity measurements
- Various parameters such as azimuth, elevation, and atmospheric attenuation constants
- Macroinstructions before each radial
- Microinstructions during turn-on

5-2.8.2 PSP Hardware. There are four major types of hardware assemblies within the PSP: arithmetic unit input data selection and distribution, arithmetic units, arithmetic control unit (ACU), and input/output control (IOC). The arithmetic unit input data selection and distribution assigns parity codes to the I and Q video data streaming in from the HSP. The ACU uses the macrocode program to generate microcodes for the arithmetic units (AU) which performs the processing of the I and Q video to generate reflectivity, velocity, and velocity spectrum width data. The IOC performs unfolding on the velocity data to resolve velocity measurement ambiguities.

5-2.8.3 Software Aspects of Converting Video to Base Data. The major task of the PSP is to process the time-series I and Q video into base data: reflectivity, radial velocity, and spectral width of the radial velocity. The reflectivity calculation is based on echo power ($I^2 + Q^2$), range and atmospheric attenuation parameter, and a system gain calibration term. Processing of the Doppler information is more involved. With Doppler radar there needs to be a trade-off regarding the pulse repetition time (PRT). To obtain a large unambiguous range, a long PRT is needed since the maximum unambiguous range is determined by the time the pulse has to make the round trip before the start of the next pulse. However, to obtain a high first blind speed, a short PRT is needed since the velocity is based on the Doppler frequency determined by comparing (subtracting) successive pairs of returns for the same range cell. These two samples are separated in time by the PRT. If the PRT is a multiple of the Doppler's period (reciprocal of the Doppler frequency), the two echo sine waves will differ by a multiple of $2\pi$, so the amplitude of their difference will be zero.

5-2.8.3.1 PRT Length Trade-Off. To satisfy this trade-off on PRT length, two kinds of PRTs are used. One is a long PRT that is used for the surveillance waveform. It is for large unambiguous range; its Doppler is ignored. The other is a short PRT that is used for the Doppler waveform. It provides both range and Doppler information.

5-2.8.3.2 Beam Coverage Pattern. The beam coverage pattern has been divided into three regions based on elevation: low, intermediate, and high. At high elevation angles there are not likely to be returns from beyond the Doppler (short PRT) maximum unambiguous range, so these returns are determined to be from non-ambiguous range Doppler.

5-2.8.3.2.1 At low elevation angles, the Doppler waveform is likely to generate returns from targets beyond the maximum unambiguous range as well as from ground clutter. The Doppler is needed, however, to determine velocity. The solution used is to have two azimuth sweeps (cuts) at each elevation. The first cut is a surveillance cut (long PRT) for the unambiguous range and for elimination of ground clutter. The second cut is a Doppler cut (short PRT). The surveillance cut data is also used to resolve the ambiguity of the Doppler waveforms range based on the decrease in power of the echo as successive multiple returns come back. By comparing surveillance and Doppler power at each range cell, the returns from beyond the maximum unambiguous Doppler can be removed.

5-2.8.3.2.2 At an intermediate elevation, the ambiguous range Doppler problem remains but not the ground clutter problem. Bypassing ground clutter calculations frees enough time so that surveillance and Doppler pulses can be combined and processed in the same cut. These are known as batch mode cuts.

5-2.8.3.3 PSP. The PSP treats the Doppler returns according to the foregoing considerations and produces the average closing velocity for each one degree radial of azimuth sweep and the spectral spread of the same velocity across the cells within the radial.

5-2.8.4 Other PSP Tasks. In addition to processing I and Q video into reflectivity, velocity, and spectral width, the PSP also performs the tasks described in paragraphs 5-2.8.4.1 through 5-2.8.4.4 .

5-2.8.4.1 Interface with RDASC Processor. In the RDASC processor interface, the HSP receives, at the start of each 1° radial, its macrocode, control parameters, and (if it is a range ambiguous Doppler cut) the power data for the corresponding radial of the same elevation surveillance cut. The PSP sends to the RDASC processor the HSP-developed base data, surveillance cut power data, and (if applicable) test and calibration data. In addition, the PSP passes data through from the RDASC processor to the HSP. These data are controls, clutter map data, and self-test controls and parameters. The PSP also passes HSP built-in-test results to the RDASC processor.

5-2.8.4.2 Program Control. In the program control task, the PSP is slaved to the RDASC processor. It is involved at three different times: power turn-on, start next elevation layer, and end of radial. During power turn-on initialization, the RDASC downloads tables, PSP microcodes, and HSP-destined parameters. At the start of a new elevation layer, the RDASC downloads PSP macrocodes and HSP parameters. The PSP starts processing upon command from the HSP synchronizer. At the end of each radial, the PSP formulates base data reports destined for the RDASC processor.

5-2.8.4.3 RDA Calibration. In the RDA calibration task, the PSP measures bias and noise power, computes Fourier coefficients for comparing its output with the input test signals, collects calibration data, and reports status.

5-2.8.4.4 Performance Monitoring and Fault Localization (PMFL). In the PMFL task, the PSP performs its normal processing tasks on RF test signals injected at the antenna or digital test signals injected at the HSP. It also performs memory parity tests and periodic, non-interfering fault localization tests.

5-2.8.5 Primary Outputs Developed by the PSP. The primary outputs developed by the PSP are listed as follows:

- Reflectivity
- Radial Velocity
- Spectrum Width of radial velocity

} base data

- Surveillance echo power for resolving range ambiguity of Doppler cuts

- PSP status word
- Bias and power arrays
- Fourier coefficient array

} during calibration

- Time-series array for archiving

5-2.9 RDASC PROCESSING.

The RDASC processor is a minicomputer which operates under the executive control of an operating system. It runs the RDASC Application Program, Computer Program Configuration Items (CPCI) 01, during normal operation, and the RDA Diagnostic Program, CPCI 06, during off-line system operability testing (SOT). The RDASC processor contains a central processing unit (CPU), a memory, a timing function, and a mass storage and archiving section. (See Figure FO5-1, sheet 2 or Figure FO5-2, sheet 3.) It communicates with the HSP and PSP, antenna positioning electronics, maintenance console, DAU, and the Radar Product Generation (RPG) Group. In redundant systems, it also communicates with the RDASC processor of the dual channel through an interprocessor link and a servo and DAU link.

5-2.9.1 Central Processing Unit. The CPU contains a microprocessor which is used to emulate the instruction set, an arithmetic logic unit (ALU), an interface with the memory system, a floating point processor, and control circuitry. The memory uses dynamic MOS ready access memory (RAM) chips and provides four Mb of storage. It is organized around address and data buses with transfers arranged by a controller card. A timing function provides a universal clock for use throughout this processor, a time of day clock for real time data logging, and a programmable read only memory (PROM)-type loader storage unit to control loading the RDA program tape on the small computer system interface (SCSI) unit.

5-2.9.2 Mass Storage and Archiving. The mass storage function holds programs and data while the CPU is not using it. It has a magnetic tape unit for loading the RDA programs, a 140 Mb fixed disk which can store status and meteorological base data for up to six hours, and an optical disk controller. The Archive II controller is able to write digital radar data and scan pattern information to recording media.

5-2.9.3 RDASC Application Program Functions - CPCI 01. The RDASC application program, CPCI 01, is composed of seven distinct modules, or functions, which collectively provide the total RDASC processing capability. The seven application program functions are discussed in paragraphs 5-2.9.3.1 through 5-2.9.3.7 .

5-2.9.3.1 Function 1 - Handle Maintenance Console. The Handle Maintenance Console function provides the operator-machine interface between the RDA maintenance operator and the program through the maintenance terminal (alphanumeric keyboard and display).

5-2.9.3.2 Function 2 - Monitor RDA Hardware. The Monitor RDA Hardware function assembles status and performance data from throughout the RDA. It monitors direct sensor outputs or outputs derived in other program functions. It determines the ordering and sequence of calibration, status and performance monitoring tests, particularly those which cannot be performed

simultaneously with normal radar data gathering activities; it calculates required calibration parameters, issues status messages and alarms, and initiates their transmission to the maintenance terminal display and the RPG.

5-2.9.3.3 Function 3 - Form RDA Data. The Form RDA Data function associates meteorological base data and quality status flags with header information which includes time, azimuth, elevation, calibration parameters (at least one per elevation cut). It also prepares other RDA output data for transmission over the wideband data links and generates the parameter blocks used by the Handle Wideband Data function.

5-2.9.3.4 Function 4 - Handle Wideband Data. The Handle Wideband Data function controls the wideband interface to the RPG, the optional wideband data link to a user, and the optional Level II archiving. It also monitors the status of the wideband data links, passing this information to the Monitor RDA Hardware function, and also passing on requests for special interface tests to the wideband link hardware. The data transmitted to the RPG includes meteorological base data with headers, RDA status data, RDA status alarms, detailed RDA calibration, and performance information either upon request, or as scheduled through site adaptation data. Data transmitted over the wideband data link to the user includes base data with headers and summary status. Maintenance data will not normally be transmitted over this link. Data transferred to Level II archiving will include base data with headers. Data input to the RDA from the RPG includes mode and RDA function commands, volume scan program data, clutter map and clutter suppression control data, and maintenance and RDA status requests.

5-2.9.3.5 Function 5 - Control RDA. The Control RDA function provides RDA mode control, configuration and status control, specifies data to be Level II archived, and coordinates the operations of the other RDASC program functions, providing the coarse timing of the RDA. (The fine grain timing is provided by the synchronizer function of the signal processor subsystem under the control of the RDASC program.) It also includes the startup, restart and shutdown sequences, and power loss and recovery sequences. At a more detailed level of control, this function coordinates RDA operations, sequences the volume scan pattern, directs the pedestal angle control, specifies signal processing control and waveform parameters, and interleaves calibration and performance monitoring checks during elevation transitions.

5-2.9.3.6 Function 6 - Control Signal Processor. The Control Signal Processor function generates and assembles the control commands, parameters, and data required for proper functioning of the components of the PSP, HSP synchronizer, receiver, and RF generator. It services the interface between its host RDASC processor and the signal processor subsystem, initiates output of the above control data, and input of base, BIT, calibration, and test data from the components serviced by this interface.

5-2.9.3.7 Function 7 - Control Pedestal. The Control Pedestal function provides the following control functions:

- Move to and maintain a specified angle position
- Slew to a specified position
- Achieve and maintain a specified angle rate

The status of the pedestal is controlled and monitored and status information is passed to the Control RDA function. The dynamic performance of the pedestal angle loops is monitored and results passed to the monitor RDA hardware function. The built-in test equipment (BITE) flag and sensor data is passed to the monitor RDA hardware functions.

5-2.9.4 RDA System Operability Test (RDASOT) Functions - CPCI 06. The RDASOT program, which is used for off-line maintenance, diagnostic and clutter bypass map generation, consists of the following eleven independent modules or functions which are discussed in paragraphs 5-2.9.4.1 through 5-2.9.4.1 1.

5-2.9.4.1 Function 1 - SOT Control. SOT control is responsible for the overall control of the SOT program. This function processes the selection of tests and other functions, controls the execution of each test, and provides a common operator-machine interface.

5-2.9.4.2 Function 2 - Transmitter Diagnostics. The transmitter diagnostic is responsible for isolating failures within the transmitter. Upon detection of an error, it informs the operator of the failing line replaceable unit (LRU) or the group of not more than three LRUs responsible for the failure. The transmitter diagnostic incorporates extensive use of BITE status.

5-2.9.4.3 Function 3 - Tower/Utility Diagnostics. The tower/utility diagnostic is responsible for isolating failures within the environmental control system, auxiliary power generator and power distribution systems, and site security system. Upon detection of an error, it informs the operator of the failing LRU or group of LRUs that are responsible for the failure. The tower/utility diagnostic incorporates extensive use of BITE status.

5-2.9.4.4 Function 4 - DAU (Interface) Diagnostics. The DAU diagnostic is responsible for isolating failures within the DAU. The diagnostic must inform the operator of the failing LRU or group of LRUs responsible for the failure.

5-2.9.4.5 Function 5 - Pedestal Diagnostics. The pedestal diagnostic is responsible for isolating failures within the pedestal. The diagnostic incorporates sensory information from the DAU and the pedestal and uses built-in-tests (BITs) residing in the pedestal for the isolation of failures. Upon detection of an error, it informs the operator of the failing LRU or group of LRUs responsible for the failure.

5-2.9.4.6 Function 6 - Receiver Diagnostics. The receiver diagnostic is responsible for isolating failures within the receiver, RF/IF monitoring, and test source selects. Fault isolation is performed by injection of a test signal and the monitoring of the test signal through the receiver. Upon detection of an error, the receiver diagnostic informs the operator of the failing LRU or group of LRUs responsible for the failure.

5-2.9.4.7 Function 7 - PSP Diagnostics. The PSP diagnostic is responsible for isolating failures within the PSP. This includes LRUs from the input signal conditioner to the IOC. Fault isolation is performed through end-to-end tests. Predefined data is injected at the front end and the resultant data patterns received from the PSP are inspected. Failing LRUs are determined through error patterns in the data. Upon detection of an error, the PSP diagnostic informs the operator of the failing LRU or group of LRUs responsible for the failure.

5-2.9.4.8 Function 8 - HSP Diagnostics. The HSP diagnostic is responsible for isolating failures in the A/D converter, prescaler, clutter filters, and combiner. Fault isolation is performed by

injection of a test signal and the monitoring of the test signal at various points within the HSP. Upon detection of an error, the HSP diagnostic informs the operator of the LRU or group of LRUs responsible for the failure.

5-2.9.4.9 Function 9 - Complex Spectrum Measurement (Confidence Test). The complex spectrum measurement will display in tabular form the log amplitude and phase for each spectral line of a known test target. The complex spectrum measurement is a systems confidence test and not a diagnostic. It is here that the RDASC uses the results of the PSP Fourier coefficients calculations. Interpretation of the output data is required to determine the operability of the system. No LRUs are specified as possible causes of a failure.

5-2.9.4.10 Function 10 - Clutter Bypass Map Generation. The Clutter Bypass Map function of the RDASOT is responsible for the generation of the site-dependent clutter filter bypass map used by the operational program. The generation of the map is automatic. It is based on a comparison of returns using the clutter filter with returns bypassing the clutter filter. This is not a diagnostic and no LRUs will be specified if a failure occurs.

5-2.9.4.11 Function 11 - Sun Source Checks. The sun source checks test uses the sun as a test source and performs checks on the antenna and radome performance and the pedestal alignment to true north. Results from these checks must be interpreted to determine the operability of the system. No LRUs are specified as possible causes of a failure.

5-2.9.5 RDASOT for Redundant Configurations. For FAA or NWS redundant configurations, RDASOT runs in one of two modes: full mode or limited mode. In full mode, all software functions are enabled. In limited mode, all software functions requiring use of the antenna/pedestal are inhibited. For a channel to run RDASOT in full mode, one of the following conditions must exist:

- Neither CPCI-01 nor CPCI-06 is running in the other channel
- If CPCI-06 is running in the other channel, it must be running under limited mode
- If CPCI-01 is running in the other channel, it must be in local control with an operating state of standby, off-line operate, or playback

In limited mode, the following functions are inhibited:

- Transmitter diagnostic subtests that perform waveguide switch check for channel 2 and peak power measurements
- Pedestal diagnostics
- Complex spectrum measurement subtests that perform pedestal positioning and radar data measurement for input data
- Generate clutter map
- Sun source checks
- SOT control subfunctions that control the pedestal and radar data

5-2.10 VMEBUS TO CONCURRENT I/O BUS INTERFACE.

The VMEbus to Concurrent I/O Bus Interface (VCI) facilitates use of a VMEbus communication path between the RDASC processor’s (Concurrent) computer and the wideband communication

interface. (See Figure FO5-2, sheet 3.) The VCI consists of VCI-C UD5A12A18, VCI-V interface board UD5A1A1, and a cable bus. The VCI-C board provides an interface between the DMA and MUX busses of the RDASC processor and the cable bus. The cable bus provides a connection between the VCI-C and VCI-V board. The VCI-V board, in turn, provides an interface between the cable bus and the VMEbus.

The VCI-C board functions as a switcher, connecting either the DMA bus to the cable bus or the MUX bus to the cable bus. The board contains an on-board microprocessor that performs control and diagnostic operations. It reports diagnostic test results back to the M3200 CPU via the MUX bus. The VCI-C board also reconfigures data arriving from the 32-bit VMEbus (via the cable bus) so that it can be placed on the 16-bit DMA bus.

The VCI-V board contains a VMEbus interface controller (VIC) chip, which controls the master/slave architecture of the VMEbus. Arbiter circuitry on the VCI-V board receives VMEbus access requests from peripheral cards connected to the VMEbus. The circuitry determines which peripheral should gain master control of the bus. The VMEbus connects the VCI-V board to wideband boards in the wideband communication interface. Any one of these boards can acquire the bus (become master) to transfer data to the M3200 processor via the VCI-V board (which would become slave). The VCI-V board can also become master of the VMEbus to transfer data from the M3200 CPU to a particular wideband board.

The wideband boards connect to similar wideband boards in the RPG, establishing a wideband link. The RDA transfers elevation slices of base data and RDA status to the RPG over this link. The RPG uses this link to send commands and controls to the RDA. The DAU sends command signals to the Wideband Communication Switch UD5A19, causing its coil to energize. The energized coil causes its contacts to switch either to the A position or B position, closing the path for the controlling channel.

The physical link between the wideband cards in the RPG and RDA varies. It can be one of the five following configurations:

- Hardwired connection using shielded, twisted pair cable
- Private T1 connection, consisting of channel service units (CSUs) placed in the line when the distance between the RDA and RPG is between 400 to 3,000 feet
- Telephone company (TELCO) T1 connection, consisting of CSUs placed in the line, and the line between the CSUs is leased from the telephone company
- 20-foot twisted pair cable to a microwave line-of-sight (MLOS) transceiver

# Section 5-3. Transmitter Functional Block Diagram Description

## 5-3.1 INTRODUCTION.

This section provides a functional description of the WSR-88D transmitter at the functional block diagram level. Figure FO5-3, is the functional block diagram for the transmitter. An overview of the transmitter and the following transmitter functions are discussed in this section.

- Transmitter RF amplification
- Transmitter pulse modulation
- Transmitter control and monitoring
- Transmitter high-power microwave distribution
- Transmitter power and low-voltage distribution
- Transmitter cooling
- Transmitter fault monitoring

A more detailed description at the functional flow diagram level for the transmitter is provided in NWS EHB 6-511, Transmitter Field Maintenance Manual, Chapter 2, paragraph 2.3.

**NOTE**

This section refers to the RDADP as UD5, the Receiver as UD4, the Transmitter as UD3, and the Waveguide Pressurization Unit as UD6. Unless otherwise specified, the information also applies to redundant systems UD105, UD104, UD103, and UD106.

## 5-3.2 TRANSMITTER OVERVIEW.

The transmitter is a gated, gain and phase stable, high-power pulse amplifier. The transmitter shapes and amplifies the RF pulses from the receiver RF generator in order to deliver the required RF power and pulse train to the antenna. A complete overview description of the major equipment functions listed in paragraph 5-3.1 is provided in NWS EHB 6-511, Transmitter Field Maintenance Manual, Chapter 2, paragraph 2.2.

## 5-3.3 TRANSMITTER RF AMPLIFICATION.

The RF amplification circuits (Figure FO5-3, sheet 3) consists of the RF driver, RF pulse shaper, filament power supply, vacuum pump power supply, focus coil power supply, waveguide arc/voltage standing wave ratio (VSWR) detector, klystron, and oil tank assembly that contains power transformer T4, pulse transformer T1, filament transformer T3, and Oil Tank Component Board A1. These circuits combine to amplify a 10-mW, 10-µsec RF drive pulse received from the receiver RF frequency generator to produce a nominal 0.7 megawatt high-power RF pulse to the antenna

waveguide. The high-power pulses produced have durations ranging from 1.57 µsec (short) to 4.5/5.0 µsec (long). The transmitter is synchronized to the system PRF by control signals and triggers provided by the control and monitoring circuits.

5-3.3.1 RF Driver Module Assembly UD3A4. Inputs to the RF driver module assembly are the 10-mW RF drive signal from the RF frequency generator and the RF drive trigger from the control and monitoring circuits (Figure FO5-3, sheet 6). The RF driver amplifies the 10-milliwatt signal into a 48 watt (minimum) RF drive output that is applied to the RF Pulse Shaper Module A5. The RF drive trigger (RF Pretrigger) synchronizes the operation of the RF driver to the system PRF.

5-3.3.2 RF Pulse Shaper Module Assembly UD3A5. The RF pulse shaper receives the 48 watt, 10 µsec RF drive signal from the RF driver along with the RF gate from the control and monitoring circuits (Figure FO5-3, sheet 6) and the short pulse select signal from the HSP in the signal processor. The RF gate signal is used to synchronize the timing of the pulse shaper with the system PRF. The short RF pulse select signal is used to select a 1.5 µsec (short) pulse as an output from the pulse shaper. The RF pulse shaper output is a 15 watt peak (minimum) drive signal that is used to drive the klystron tube V1. The drive signal is applied to the variable attenuator before inputting at the klystron tube.

5-3.3.3 Variable Attenuator UD3AT1. Zero to 15 dB of attenuation is allowed by the variable attenuator to prevent klystron overdrive by the RF drive signal output of the pulse shaper. Variable attenuator AT1 is manually adjusted.

5-3.3.4 Filament Power Supply UD3PS1. The filament power supply receives the mid PRT and mod discharge triggers from the control and monitoring circuits (Figure FO5-3, sheet 6) to synchronize the power supply output to the system PRF. 208V 3ϕ power is received from the power and low voltage distribution circuits (Figure FO5-3, sheet 1). The filament power supply produces an AC square wave output of approximately 70V. This output supplies the klystron filament with rectangular AC heater current (via transformers T4, T1, and T3).

5-3.3.5 Power Transformer UD3A7A1T4. The power transformer receives the nominal 70 Vac output from the filament power supply and produces a 234V filament square wave that is applied to the pulse transformer.

5-3.3.6 Pulse Transformer UD3A7T1. The pulse transformer accepts the -2.4 kV modulator pulse from the PFN (Figure FO5-3, sheet 2) and input from the power transformer and produces a -67 kV cathode pulse that brackets the RF drive pulse. The -67 kV cathode pulse provides the klystron with the power required for RF amplification.

5-3.3.7 Filament Transformer UD3A7T3. The filament stepdown transformer A7T3 provides an increase in filament current to 27 amps due to the 6 volt stepdown of the input voltage.

5-3.3.8 Vacuum Pump Power Supply UD3PS8. The vacuum pump power supply uses 1 phase of the 208V 3ϕ power supplied by the power and low voltage distribution circuits (Figure FO5-3, sheet 1) and produces a 3 kV output voltage that is applied to the klystron ion pump. This voltage maintains tube vacuum by removing free ions that collect on the internal metallic surfaces of the tube. If the amperage is greater than 20 µamps, the tube is considered to be gassy and a transmitter fault occurs.

5-3.3.9 Focus Coil Power Supply UD3PS2. The focus coil power supply receives 208V 3ϕ power from the power and low voltage distribution circuits (Figure FO5-3, sheet 1) and an enable signal from the control logic circuit in the control and monitoring circuits (Figure FO5-3, sheet 6). The resultant output from the current-regulated power supply is approximately 25 amperes DC that is applied to the focus coil and provides beam focusing for the klystron. Beam focusing is essential to prevent klystron damage.

5-3.3.10 Klystron Tube UD3V1. The klystron tube inputs are RF drive, filament current, modulation (cathode) pulse, vacuum pump voltage, and focus coil current. The klystron amplifies the RF drive pulse and produces a high power (0.7 MW) RF output pulse that is applied to the antenna/microwave circuitry. This output occurs at the system PRF.

5-3.3.1 1 Waveguide Arc/VSWR Detector UD3A6. The arc detector monitors transmitter reflected power. A high VSWR is indicated by excessive power reflected back to the klystron. Visible arcs are detected by a photodiode that optically monitors the klystron output window.

5-3.3.12 Oil Tank Component Board UD3A7A1A1. Component Board A1 (Figure FO5-3, sheet 3) contains a bridge rectifier which develops filament voltage samples and a beam sampling circuit which develops beam current samples. The resulting klystron filament voltage and beam current samples are sent to the control and monitoring circuits of Transmitter Control Panel UD3A1 (Figure FO5-3, sheet 6).

## 5-3.4 TRANSMITTER PULSE MODULATION.

The pulse modulation circuits (Figure FO5-3, sheet 2) consists of a 280 Vdc power supply, filter capacitor bank, charging switch, charging transformer, modulator pulse assembly, post charge regulator, trigger amplifier, and fault monitoring circuitry. The purpose of the modulator is to produce a -2.4 kV modulation pulse that is applied to the pulse transformer and klystron at the time the RF drive pulse arrives for proper RF amplification that produces a high-power RF output of the transmitter. Inputs to the modulation circuits are range bits from the HSP, triggers from the control and monitoring circuits (Figure FO5-3, sheet 6) and power from the power and low voltage distribution circuits (Figure FO5-3, sheet 1).

5-3.4.1 280 Vdc Power Supply UD3A2. The 280 Vdc power supply receives 208V 3ϕ from the power and low voltage distribution circuits (Figure FO5-3, sheet 1) and produces 280 Vdc unregulated output that is applied to Filter Capacitor Bank UD3A9 for filtering. The 280 Vdc is then applied to the Charging Switch UD3A10 and the Trigger Amplifier UD3A11. The 280 Vdc output is ultimately used to provide the power to the modulator.

5-3.4.2 Charging Switch UD3A10. The charging switch receives the filtered 280 Vdc from the 280 Vdc power supply along with the mod charge trigger and charge gen enable signal from the control and monitoring circuits (Figure FO5-3, sheet 6). The mod charge trigger is used to synchronize the charging switch to the rest of the transmitter functions. Upon receipt of the mod charge trigger and enable signal, the charging switch switches the 280 Vdc at the modulator charging rate to the charging transformer located in the oil tank assembly.

5-3.4.3 Charging Transformer UD3A7T2. The charging transformer receives the 280 Vdc from the charging switch and produces an output of 4.8 kV. The 4.8 kV output is applied to the PFN in the modulator pulse assembly.

5-3.4.4 Modulator Pulse Assembly UD3A12. The modulator pulse assembly receives the 4.8 kV charging voltage from the charging transformer and applies it to the PFN through the Diode Assembly UD3A12A5. This voltage causes the PFN to charge either the narrow or wide PFN according to the switching action of the PFN switch. When the 10 kV trigger pulse is received from the trigger amplifier, the PFN discharges which produces a -2.4 kV pulse at the pulse transformer UD3A7T1 (Figure FO5-3, sheet 3).

5-3.4.5 Post Charge Regulator UD3A8. Post charge regulator timing is maintained and controlled by the post charge trigger received from the control and monitoring circuits (Figure FO5-3, sheet 6). The cycle-to-cycle variation regulation by the post charge regulator minimizes the amplitude and phase variations in the RF output. The post charge regulator regulates the PFN charge voltage to within 0.01 percent of the desired operating point until the PFN is discharged.

5-3.4.6 Trigger Amplifier UD3A11. The trigger amplifier receives the filtered 280 Vdc from the 280 Vdc power supply, mod discharge trigger, trigger amp enable, and mod trigger amp signals from the control and monitoring circuits (Figure FO5-3, sheet 6). Upon receipt of the mod discharge trigger, the trigger amplifier delivers a 10 kV trigger pulse to the modulator pulse assembly that causes the RBDTs to fire which in turn causes the PFN to discharge.

## 5-3.5 TRANSMITTER CONTROL AND MONITORING.

The control and monitoring circuits (Figure FO5-3, sheet 6) consists of Control Adapter UD3A3A4, Control Logic UD3A3A1, Control Interface UD3A3A2, RMS Interface UD3A3A3, and Transmitter Control Panel UD3A1. Operation of the transmitter is controlled by the control and monitoring circuits. These circuits provide front panel metering for voltages and currents, fault monitoring status indications, transmitter status, and external interfacing with the RDA data processor. Timing triggers and remote control commands received by the RDA data processor are distributed in the transmitter by the control and monitoring circuits.

5-3.5.1 Control Adapter UD3A3A4. The control adapter inputs consist of triggers received from the synchronizer in the HSP, waveguide switch interlock and summary fault signals, and PFN short pulse select signals from the HSP. The PFN selection logic provides relay drive for PFN selection. The fault logic circuit provides output to turn off transmitter high voltage, if excessive PRFs are encountered by providing trigger fault signal to fault logic. Trigger outputs are sent to the RF amplifier circuits (Figure FO5-3, sheet 3) and modulation circuits (Figure FO5-3, sheet 2).

5-3.5.2 Control Logic UD3A3A1. Inputs to the control logic are fault and interlock signals from the control adapter and status/control signals from the control interface. The control logic processes status and fault information and provides outputs of TX RECYCLE, TX INOP, and TX HV OFF signals to the DAU in the RDADP cabinet. In addition, the control logic initiates fault reset attempts and determines the transmitter control configuration.

5-3.5.3 Control Interface UD3A3A2. The control interface receives antenna and high voltage commands from the DAU in the RDADP cabinet and waveguide PFN interlock signals from the control adapter. Noise suppression for status, lamp, and control signals are provided by the control interface. The status/fault signals are sent to the control logic RMS interface circuits.

5-3.5.4 RMS Interface UD3A3A3. Inputs to the RMS interface consist of detected faults from the power and low voltage distribution circuits (Figure FO5-3, sheet 1), RF amplification circuits (Figure FO5-3, sheet 3), modulation circuits (Figure FO5-3, sheet 2), high power microwave circuits (Figure FO5-3, sheets 4 and 5), and transmitter status word bits from the RDA data processor data acquisition interface. Multiplexed transmitter status data is output to the DAU interface in the RDA data processor cabinet. Transmitter fault data latched in the RMS interface is provided to the transmitter control panel fault display circuits.

5-3.5.5 Transmitter Control Panel UD3A1. Status lamps, remote/local control switching, metering, and monitoring circuits are contained in the control panel. Fault data, voltage and current samples, and status data are input to the control panel circuits. These circuits process, display, and monitor the transmitter functions. Klystron filament, focus coil, and vacuum pump current fault signals are provided as outputs to the RMS interface. PFN voltage adjustment is provided for the modulator charging circuits (Figure FO5-3, sheet 2).

## 5-3.6 TRANSMITTER HIGH POWER MICROWAVE DISTRIBUTION.

The high power microwave circuits (Figure FO5-3, sheets 4 and 5) are briefly discussed in this paragraph. A more detailed discussion is found in Section 5-10 . The following paragraphs describe the functional flow of a single channel system (sheet 4) and of a redundant system (sheet 5).

5-3.6.1 Harmonic Filter UD1WG2 and UD1WG102*. The high power RF energy from the klystron (Figure FO5-3, sheet 3) is input to the harmonic filter which attenuates second, third, and fourth harmonics that may be present due to non-linear operation of the klystron.

5-3.6.2 Circulator UD1WG4 and UD1WG104*. The circulator receives the RF from the harmonic filter which serves to isolate and protect the klystron from reflected power. The main RF path output of the circulator is passed through the spectrum filter and the crossguide coupler to Waveguide Switch 1S1/1S101*. Reflected power is sent from the circulator to medium power termination (1AT2 for single channel systems: 1AT2 or 1AT102 for dual channel systems.) A temperature sensor in the circulator provides an over temp signal that is sent back to the DAU interface, then to the power and low voltage distribution circuits (Figure FO5-3, sheet 1) and the control and monitoring circuits (Figure FO5-3, sheet 6) if excessive temperatures are detected. The crossguide coupler (bi-directional) samples the RF and sends it to the receiver circuits.

5-3.6.3 Spectrum Filter UD1WG6 and 1WG106*. The spectrum filter is used, at selected sites, as a bandpass filter to prevent interference with other equipment in the area.

5-3.6.4 Crystal Detectors UD1CR1/1CR2 and 1CR101/1CR102*. The crystal detectors detect any reflected power and couples the energy back to the waveguide arc/VSWR detector (Figure FO5-3, sheet 3) in the transmitter.

5-3.6.5 Waveguide Switch UD1S1. The waveguide switch (used in single channel systems only) transfers the RF energy to the antenna when the antenna command is present. When the antenna command is not present or one of the interlocks is open, the RF is switched to the high power termination 1AT3 which provides a dummy load. When the antenna command is present, the

- - - - -

* Used in redundant systems.

RF output is then passed through the waveguide and rotary joints to the antenna. A crossguide coupler after the elevation rotary joint samples the RF and sends it to the DAU interface for monitoring.

5-3.6.6 Waveguide Switch UD1S1 Control and Switching. The waveguide switch will output the antenna waveguide position indication (28V) signal and waveguide switch interlock signal to the control and monitoring circuits (Figure FO5-3, sheet 6) when the antenna command is received.

5-3.6.7 Waveguide Switches UD1S1 and UD1S101* The redundant system waveguide switches transfer the RF energy of their channel to waveguide switch UD1S2 when the antenna command is present in the respective channel. Waveguide switch UD1S2 switches RF energy of only one channel to the antenna. When the antenna command is not present in a channel or one of the interlocks is open, the RF of that channel is switched to high power termination 1AT3 or 1AT103.

5-3.6.8 Waveguide Switch UD1S2*. Waveguide switch 1S2 transfers RF energy from either Channel 1 or Channel 2 to the antenna. The command to switch between channels is initiated by the operator at the Distant MSCF for FAA redundant systems, or at the remote RDA maintenance terminal for NWS redundant systems. The RF output of the selected channel is passed through the waveguide and rotary joints to the antenna. Crossguide Coupler UD2A1DC1 samples the RF and sends it to an antenna RF power monitor in both channels. The power monitors convert the RF to a DC signal, and output this signal to their respective DAU.

5-3.6.9 Waveguide Pressurization Unit UD6 and UD106*. The waveguide pressurization unit supplies dry air for the waveguide. Waveguide pressure and humidity sensors detect malfunctions or conditions that offset pressurization and sends these detected faults to the control and monitoring circuits (Figure FO5-3, sheet 6) in the transmitter.

5-3.7 TRANSMITTER POWER AND LOW VOLTAGE DISTRIBUTION.

Power and low voltage distribution circuits (Figure FO5-3, sheet 1) distribute the required power and low voltages throughout the transmitter. The 120/208 Vac from the site power source is received by these power distribution circuits. The power and low voltage distribution circuits consist of the power distribution panel, low voltage power supplies, filters, lighting, air blowers for cooling, and fuses.

5-3.7.1 Power Distribution Panel 3A13. The power distribution panel receives the 3-phase 120/208 Vac from the site power source through terminal board TB2 and is applied to HV Power Circuit Breaker CB1, Auxiliary Power Circuit Breaker CB2, and single-phase AC to Cabinet Lights Circuit Breaker CB3. The HV power CB1 can be closed if the keylock is in the counterclockwise position. The AC voltage output, when CB1 is closed, is through line filters FL1, 2, and 3 to the 280 Vdc power supply, focus coil power supply, main blower B3, oil pump HP1, and through the fusebox assembly and protecting fuses F1, 2, and 3 to the focus coil and klystron air blowers, B1 and B2. The 3-phase output from auxiliary CB2 goes through line filters FL4, 5, and 6 to low voltage power supplies PS3 through PS7; protection fuses F10, 11, and 12 to filament power supply blower B4, vacuum pump, and filament power supplies in the RF amplification circuits (sheet 3). The low

- - - - -

* Used in redundant systems.

voltage power supplies PS3 through PS7 supply +28V, +15V, -15V, +5V, and +45 Vdc respectively, to the transmitter circuits. The cabinet lights CB3, when closed, supplies single-phase AC through line filter FL7 to the light switches and cabinet bay lights.

5-3.7.2 Fuse Box Assembly UD3N3. The fuse box assembly contains relays K1 through K5 and fuses F4 through F13. Main blower fuses F7, 8, and 9 protect the main blower B3. Fuses F4, 5, and 6 protect focus coil power supply (Figure FO5-3, sheets 1 and 3). Fuses F10, 11, and 12 protect the filament and vacuum pump power supplies (Figure FO5-3, sheets 1 and 3). Fuse F13 protects oil pump HP1 which receives only single-phase AC. Relay K1 is closed when relays K2 through K5 are energized and passes the 3-phase AC to 280 Vdc power supply (Figure FO5-3, sheet 2) and focus coil power supply (sheet 3). Cabinet interlock outputs are sent to the control and monitoring circuits (Figure FO5-3, sheet 6).

## 5-3.8 TRANSMITTER COOLING.

Transmitter cooling provides for removal of the substantial heat generated in operating the klystron and its related high power electronics. A combination of convection, blowers, and ductwork is used to move the cooling air over the hot equipment. The dielectric oil is pumped through a heat exchanger. There is a transmitter cabinet blower plus three special area blowers for the klystron, focus coil, and filament power supply. See Figure FO5-3, sheet 1 for power distribution concerning blowers.

## 5-3.9 TRANSMITTER FAULT MONITORING.

The transmitter is continuously monitored for faults. This fault monitoring is performed at two levels: hardware and software.

5-3.9.1 Hardware Fault Monitoring. The transmitter has a built-in-test (BIT) feature (Figure FO5-3, sheet 6) which monitors the circuits within the transmitter. If a fault is detected, it is indicated by illuminating the fault display indicator on the Transmitter Control Panel UD3A1 as well as setting one of the fault bits in the transmitter status data (TSD) message which is sent via the DAU to the RDA Application Program (CPCI01). The RDA application program, in turn, makes the transmitter status data available as the RDA performance data. This information is available locally for display on the RDA maintenance terminal (application console mode). This information is also supplied to the FAA Remote Monitoring Subsystem (RMS). It may also be transmitted via the wideband link to the RPG upon request, where it may be displayed on the MSCF workstation. In addition to the formulation of the RDA performance data, the transmitter status data is also used to generate RDA alarms. All of the alarms generated from the transmitter status data are RDA mode forcing (i.e., INOPerative; MAINT MANDATORY; MAINT REQUIRED). Table 5-1 has the faults as listed on the fault monitor, RDA performance data, and the associated RDA alarm, as well as the RDA mode, forced.

5-3.9.2 Software Fault Monitoring. There are several RDA alarms which do not have a counterpart as a Transmitter UD3 fault monitor indication. (Refer to Table 5-1). These RDA alarms result from power calculations performed by the RDA application program (CPCI01). The power meter data (transmitter average power and antenna average power) collected during the data collection sequence is used to compute peak power leads. In order to use the power meter data,

however, a meter zero check is performed when the transmitter is not radiating. The specific functions and alarms forthcoming from the processes are described in the following paragraphs.

5-3.9.2.1 Power Meter Zero. This function zeroes out both the transmitter and the antenna power meters. This is performed to keep the power meter range at a maximum. If the power meter does not zero to within limits (as set by adaptation data), the following alarms are displayed. For power zero less than the low limit of 1 or greater than the high limit of 24, then one of the following alarms are displayed, depending on which power meter failed to zero.

XMTR POWER METER ZERO OUT OF LIMIT

or

ANTENNA POWER METER ZERO OUT OF LIMIT

5-3.9.2.2 Average Power Measurement. This measures the average power at both transmitter and antenna power meter locations, and is performed if the respective power meter zeros out properly. If a negative average power is received, the measurement is aborted for that cut. One of the following alarms are displayed, depending on which power meter had poor data.

XMTR POWER BIT FAIL

or

ANTENNA POWER BIT FAIL

5-3.9.2.3 Peak Power Measurement. This measurement is calculated only during surveillance cuts which are a constant PRF. The average power taken during those cuts is then divided by the duty cycle to calculate peak power. The following alarms are displayed if the measurements are out of limits (as set by adaptation data):

1. If the transmitter peak power is greater than 900 kW, then the TRANSMITTER PEAK POWER HIGH alarm is displayed.
2. If the transmitter peak power is less than 400 kW, then the TRANSMITTER PEAK POWER LOW alarm is displayed.
3. If the antenna peak power is greater than 625 kW, then the ANTENNA PEAK POWER HIGH alarm is displayed.
4. If the antenna peak power is less than 238 kW, then the ANTENNA PEAK POWER LOW alarm is displayed.
5. If the power meter ratio of transmitter to antenna is less than the accuracy limit of 1 dB, then the XMTR/ANT POWER RATIO DEGRADED alarm is displayed.

Table 5-1. Transmitter Fault Monitoring Data

| FAULT MONITOR | RDA PERFORMANCE DATA (XMT) | RDA ALARM | RDA MODE FORCED |
|---|---|---|---|
| MAIN POWER OVER VOLTAGE | MAIN PWR VOLTAGE | TRANSMITTER MAIN POWER OVERVOLTAGE | MAINT MAND |
| LVPS FAULT SUMMARY | +5V PS | XMTR +5VDC POWER SUPPLY 6 FAIL | INOP |
| | +28V PS | XMTR +28VDC POWER SUPPLY 3 FAIL | INOP |
| | +15V PS | XMTR +15VDC POWER SUPPLY 4 FAIL | INOP |
| | -15V PS | XMTR -15VDC POWER SUPPLY 5 FAIL | INOP |
| | +45V PS | XMTR +45VDC POWER SUPPLY 7 FAIL | INOP |
| POWER SUPPLIES FILAMENT VOLTAGE | FILAMENT PS | FILAMENT POWER SUPPLY VOLTAGE FAIL | INOP |
| POWER SUPPLIES VACUUM PUMP VOLTAGE | VAC PUMP PS | VACUUM PUMP POWER SUPPLY VOLTAGE FAIL | MAINT MAND |
| POWER SUPPLIES FOCUS COIL VOLTAGE | FOCUS COIL PS | FOCUS COIL POWER SUPPLY VOLTAGE FAIL | MAINT MAND |
| TRANSMITTER - OVERVOLTAGE | XMTR OVERVOLTAGE | TRANSMITTER OVERVOLTAGE | MAINT MAND |
| TRANSMITTER - OVERCURRENT | XMTR OVERCURRENT | TRANSMITTER OVERCURRENT | MAINT MAND |

Table 5-1. Transmitter Fault Monitoring Data (continued)

| FAULT MONITOR | RDA PERFORMANCE DATA (XMT) | RDA ALARM | RDA MODE FORCED |
|---|---|---|---|
| FOCUS COIL - CURRENT | FOCUS COIL CUR | FOCUS COIL CURRENT FAILURE | MAINT MAND |
| FOCUS COIL - AIRFLOW | FOCUS COIL AIRFLOW | FOCUS COIL AIRFLOW FAILURE | MAINT MAND |
| TRIG AMPL - FAULT SUMMARY | TRIGGER AMP | TRIGGER AMPLIFIER FAILURE | MAINT MAND |
| CHARGING SYSTEM - INVERSE CURRENT/UV | INV DIODE CURR | INVERSE DIODE CURRENT UNDERVOLTAGE | MAINT MAND |
| CHARGING SYSTEM - FAILURE | FLYBACK CHARGER | FLYBACK CHARGER FAILURE | MAINT MAND |
| MODULATOR - OVERLOAD | MOD OVERLOAD | MODULATOR OVERLOAD | MAINT MAND |
| MODULATOR - INVERSE CURRENT | MOD INV CURRENT | MODULATOR INVERSE CURRENT FAIL | MAINT MAND |
| MODULATOR - SWITCH FAILURE | MOD SWITCH FAIL | MODULATOR SWITCH FAILURE | MAINT MAND |
| KLYSTRON - OVERCURRENT | KLYS CURRENT | KLYSTRON OVERCURRENT | MAINT MAND |
| KLYSTRON - FILAMENT CURRENT | KLYS FILAMENT CUR | KLYSTRON FILAMENT CURRENT FAILURE | MAINT MAND |
| KLYSTRON - VACUUM PUMP CURRENT | KLYSTRON VACION CUR | KLYSTRON VACION CURRENT FAILURE | MAINT MAND |
| KLYSTRON - AIR TEMP | KLYS AIR TEMP | KLYSTRON AIR OVERTEMP | MAINT MAND |

Table 5-1. Transmitter Fault Monitoring Data (continued)

| FAULT MONITOR | RDA PERFORMANCE DATA (XMT) | RDA ALARM | RDA MODE FORCED |
|---|---|---|---|
| KLYSTRON - AIR FLOW | KLYS AIR FLOW | KLYSTRON AIR FLOW FAILURE | MAINT MAND |
| WAVEGUIDE - PRESSURE | SPECT FLTR PRESS | SPECTRUM FILTER LOW PRESSURE | MAINT REQD |
| WAVEGUIDE - ARC | WG ARC/VSWR | WAVEGUIDE ARC/VSWR | MAINT MAND |
| OIL - LEVEL | OIL LEVEL | TRANSMITTER OIL LEVEL LOW | MAINT MAND |
| OIL - TEMP | OIL TEMP | TRANSMITTER OIL OVERTEMP | MAINT MAND |
| ANTENNA - WAVEGUIDE INTERLOCK | WG/PFN XFER INTLK | WAVEGUIDE/PFN TRANSFER INTERLOCK | INOP |
| ANTENNA - CIRCULATOR TEMP | CIRCULATOR TEMP | CIRCULATOR OVERTEMP | MAINT MAND |
| CABINET - DOOR INTERLOCK | CABINET INTLK | TRANSMITTER CABINET INTERLOCK OPEN | MAINT MAND |
| CABINET - AIR TEMP | CABINET AIR TEMP | TRANSMITTER CABINET OVERTEMP | MAINT MAND |
| CABINET - AIR FLOW | CABINET AIR FLOW | TRANSMITTER CABINET AIR FLOW FAIL | MAINT MAND |
| MAINTENANCE REQUIRED - PRF LIMIT | PRF LIMIT | PRF LIMIT | MAINT MAND |
| MAINTENANCE REQUIRED - WAVEGUIDE PRESS/HUMID | WG PRESS/HMD | WAVEGUIDE HUMIDITY/PRESSURE FAULT | MAINT MAND |

Table 5-1. Transmitter Fault Monitoring Data (continued)

| FAULT MONITOR | RDA PERFORMANCE DATA (XMT) | RDA ALARM | RDA MODE FORCED |
|---|---|---|---|
| MAINTENANCE REQUIRED - MODULATOR SWITCH | MOD SWITCH MAINT | XMTR MODULATOR SWITCH REQUIRES MAINT | MAINT REQD |
| MAINTENANCE REQUIRED - POST CHARGE REGULATOR | POST CHG REG | XMTR POST CHARGE REG MAINT REQUIRED | MAINT REQD |
| ——— | XMTR INOP | TRANSMITTER INOPERATIVE | INOP |
| ——— | MAINT REQD | XMTR IN MAINTENANCE MODE | MAINT REQD |
| ——— | ANT PK PWR | ANTENNA PEAK POWER HIGH | MAINT MAND |
| | | ANTENNA PEAK POWER LOW | MAINT MAND |
| ——— | XMTR PK PWR | TRANSMITTER PEAK POWER LOW | MAINT MAND |
| | | TRANSMITTER PEAK POWER HIGH | MAINT REQD |
| ——— | ANT PWR METER ZERO | ANTENNA POWER METER ZERO OUT OF LIMIT | MAINT MAND |
| ——— | XMTR PWR METER ZERO | XMTR POWER METER ZERO OUT OF LIMIT | MAINT MAND |
| | ——— | XMTR/ANT POWER RATIO DEGRADED | MAINT MAND |

Table 5-1. Transmitter Fault Monitoring Data (continued)

| FAULT MONITOR | RDA PERFORMANCE DATA (XMT) | RDA ALARM | RDA MODE FORCED |
|---|---|---|---|
| ——— | HIGH VOLTAGE | TRANSMITTER HV SWITCH FAILURE | INOP |
| ——— | XMTR RECYCLE COUNT | TRANSMITTER RECYCLING | MAINT MAND |
| ——— | WG SWITCH POS | WAVEGUIDE SWITCH FAILURE | INOP |
| ——— | PFN SWITCH POS | PFN/PW SWITCH FAILURE | INOP |
| ——— | DAU INTERFACE | XMTR/DAU INTERFACE FAILURE | MAINT MAND |

# Section 5-4. Receiver Functional Block Diagram Description

## 5-4.1 INTRODUCTION.

This section provides a functional description of the WSR-88D receiver at the functional block diagram level.

**NOTE**

This section refers to the RDADP as UD5, the Receiver as UD4, the Transmitter as UD3, and the Waveguide Pressurization Unit as UD6. Unless otherwise specified, the information also applies to redundant systems UD105, UD104, UD103, and UD106.

5-4.1.1 Receiver. The receiver processes either one of the following two types of RF signals: radar echo (return) signals or simulated RF test signals. The radar return signals are processed into I, Q, and log video needed by the signal processors to produce weather base data. The simulated RF test signals are processed by the same circuits, but their purpose is either on-line calibration and performance monitoring, or off-line fault isolation.

5-4.1.1.1 Signal Processing Functions. The receiver's basic signal processing functions are:

- Receiver Channel
- Master Signal Generator
- Interference Detection

An overview of these functions is provided in paragraph 5-4.2. The functional flow involved with these functions is discussed in paragraphs 5-4.3 through 5-4.5, respectively.

5-4.1.1.2 Test Functions. The receiver's test functions are:

- RF Test Signal Generation
- RF Test Signal Processing

An overview of these functions is provided in paragraph 5-4.6. The functional flow involved with these functions is discussed in paragraph 5-4.7 and 5-4.8, respectively. The on-line and off-line use of these test functions is discussed in paragraph 5-4.9 and 5-4.10, respectively.

## 5-4.2 RECEIVER SIGNAL PROCESSING OVERVIEW.

The receiver is a computer-controlled unit that receives selected RF signals at a frequency between 2.7 and 3.0 GHz and processes the RF signals into I, Q, and log video needed by the signal processors to produce base data. The receiver front end, located in the antenna/pedestal, receives reflected RF energy only after high energy transmission has ended. Once the reflected energy is injected, the RF amplifier in the front end compensates for line loss and sends the energy to the

receiver cabinet (UD4) for further processing including RF prefiltering, RF-to-IF conversion, AGC control, IF-to-video conversion, and analog-to-digital conversion. The receiver functions prepare energy returns for secondary processing by the HSP. The receiver also sends the RF drive signal to the transmitter for generating the high voltage output pulse. See Figure FO5-4, sheet 1.

5-4.2.1 Receiver/Transmitter Interface. The RF drive signal, modulated at 2.7 to 3.0 GHz, is sent from the receiver master signal generator to the transmitter where it is amplified from 10 milliwatts peak to 0.7 megawatts peak. These pulses are sent through the high power microwave (M/W) distribution system up the tower, through the pedestal and the antenna, and out into the atmosphere. The antenna causes the outgoing waves to be linear horizontally polarized and to travel in a narrow beam (one degree in both azimuth and elevation). See Figure FO5-3, sheets 4 and 5.

Some of this energy reflects off meteorological or other targets, reverses polarization and returns to the same antenna. The returning energy passes through the circulator to the receiver front end.

5-4.2.1.1 T/R Circulator. With the transmit and receive RF signals sharing a common waveguide, the T/R circulator separates these signals and passes them to the proper components (path). The T/R circulator receives returning RF signals from the antenna feed at port 2 and passes it through the receiver front end to port 3.

5-4.2.1.2 Receiver Waveguide Switch. Receiver Waveguide Switch UD2A1S1 is used in redundant systems. It directs the RF received signal to the receiver front end of the active channel. The non-active channel is switched to Low-Power Terminator UD2A1AT3.

5-4.2.1.3 Receiver Front End. The receiver front end provides receiver protection, bandpass filtering, and low noise RF amplification.

5-4.2.1.3.1 The receiver protector blocks high-powered transmission pulse energy from reaching and damaging the sensitive receiver. The HSP sends RCVR PROTECT CMD to the receiver protector just before the transmission time. The receiver protector responds by blocking the receiver path. When this is done, the receiver protector feeds back a response (RCVR PROTECT RSP) to the HSP which becomes its trigger to begin transmission. In this way, transmission is permitted only after the receiver has acknowledged it is protected from the high-energy transmission pulse. The receiver protector also permits the injection of an RF test signal under HSP control. The RCVR PROTECT CMD is removed when monitoring circuits indicate that the cathode current pulse has ended. This unblocks the path from the antenna/feed assembly to the RF amplifier for the returning echo.

The bandpass filter prevents out-of-band energy from reaching the low noise RF amplifier, thus reducing the likelihood of harmful interference.

5-4.2.1.3.2 The low noise RF amplifier compensates for the line losses which will occur as the RF signal passes from the antenna, down the tower, and to the RF conversion circuits in the receiver cabinet.

5-4.2.1.4 RF Pre-Filtering. The RF channel tuning circuit contains a directional coupler which permits the injection of a test signal generated by the master signal generator. (When a test signal is to be used, normal transmission is inhibited.) The RF return or test signal is then passed through a preselected (tuned) bandpass filter, which improves the receiver's sensitivity by reducing noise from beyond the useful RF bandwidth. See Figure FO5-5, sheet 4.

5-4.2.1.5 RF-to-IF Conversion. The RF-to-IF conversion circuit mixes the RF return signal with a STALO signal (2.7 to 3.0 GHz-57.55 MHz) generated by the master signal generator. The difference between these signals is that the IF band is centered at about the coherent oscillator (COHO) frequency (57.55 MHz). The IF signal is then split into two identical signals which are applied to the linear channel and the log channel video detection circuits. See Figure FO5-5, sheet 4.

5-4.2.1.6 Automatic Gain Control. The AGC circuit increases the overall dynamic range of the receiver by permitting the A/D converter to handle a much wider range of RF signal amplitudes than it could without AGC. The AGC circuits attenuate (reduce) strong signals much more than they attenuate mid-amplitude signals, and don't attenuate weak signals at all. An AGC controller uses the AGC log video signal from the log channel video detection circuit to determine the amount of attenuation to be applied to the RF signal by an IF attenuator. The reduced IF is applied to the linear channel video detection circuit and a digital AGC position signal indicating the amount of attenuation applied is sent to the HSP where it is used to digitally restore (scale) the video signal to proper amplitude. See Figure FO5-5, sheet 5.

5-4.2.1.7 Log Channel Video Detection. The log channel video detection circuit converts the IF signal into video with a DC voltage proportional to the logarithm of the input. The log video is sent to the AGC circuit to control the AGC processing, to the A/D converter for transmission to the HSP, and to the interference detection circuit for interference determination. See Figure FO5-5, sheet 6.

5-4.2.1.8 Linear Channel Video Detection. The linear channel video detection circuit converts the polar amplitude and phase coordinates of the COMPRESSED IF signal to rectangular in-phase (I) and quadrature (Q) VIDEO which are easier to process with digital computation. The conversion to video is accomplished by mixing the IF (57.55 MHz) with the COHO SIGNAL to produce the I VIDEO, and mixing the IF with a 90° shifted COHO SIGNAL to produce the Q VIDEO. The I and Q VIDEO signals contain both the amplitude and phase of the original RF return signal. It is essential to preserve the phase information because it contains the Doppler frequency-shift information. See Figure FO5-5, sheet 6.

5-4.2.1.9 A/D Converter. The A/D converter converts the I, Q, and LOG VIDEO signals from analog to digital format. These three digital video signals are sent serially to the HSP for further digital processing. (The LOG VIDEO signal is not currently used by the HSP.) See Figure FO5-5, sheet 7.

5-4.2.2 Master Signal Generation. The Master Signal Generation function provides timing signals for the receiver, transmitter, and HSP. The RF GATE signal from the HSP causes the frequency generation circuit to produce the RF DRIVE signal for the transmitter. The frequency generator also develops the STALO SIGNAL (2.7 to 3.0 GHz - 57.55 MHz) which is used to convert RF to IF, COHO (57.55 MHz) SIGNAL is used to convert IF to video, and a MASTER CLOCK signal for the HSP. The RF frequency generation control data demux circuit receives RECEIVER CTRL DATA from the HSP, via the RF Test Signal Generation function, and generates a PHASE CONTROL WORD which causes the frequency generator to develop the FREQ GEN RF TEST SIGNAL when enabled by the COHO SELECT signal. The FREQ GEN RF TEST SIGNAL is used during calibration to simulate Doppler frequencies and spectral widths, and is injected at either the receiver front end or the RF conversion circuits of the receiver channel function. The

frequency generator also provides fault indications (RF FREQ GEN FAULTS) to the HSP. See Figure FO5-6.

5-4.2.3 Interference Detection. The optional Interference Detection function develops an INTERFERENCE DETECTION FLAG signal when interference is detected. An IF signal from the RF conversion circuit is applied to a guard band IF separation circuit. This circuit divides the GUARD BAND IF signal and passes it through filters which pass only the high-end (G+IF) and low-end (G-IF) extremes of the IF band. These G+ and G- IF signals are converted to G+ and G- LOG VIDEO by the guard band video detection circuit. The interference flag generation circuit compares each of the G+ and G- LOG VIDEO signals with a main INTERFERENCE DETECTION LOG VIDEO signal from the log channel video detection circuit. If interference is present, one or the other guard band video will be larger than the main band video. When this condition is detected, an INTERFERENCE DETECTION FLAG signal is sent to the HSP to prevent the use of the main (I and Q) video in subsequent calculations. See Figure FO5-7, sheets 1 and 2.

5-4.3 RECEIVER CHANNEL.

The receiver channel description involves tracing the RF signal received at the antenna through the amplification, conversion, IF, and video processing functions of the receiver to the signal processor. See Figure FO5-5 for the receiver channel functional description. The following functions are discussed in this paragraph:

- Antenna Feed Assembly
- Receiver Protection
- Bandpass Filtering
- RF Amplification
- RF Filtering
- RF-to-IF Conversion
- Log Channel Video Detection
- Automatic Gain Control
- Linear Channel Video Detection
- Video A/D Conversion

5-4.3.1 Antenna Feed Assembly. See Figure FO5-30. The feed horn collects the returning RF pulse after its reflection off the parabolic antenna. This pulse enters the orthogonal mode transducer (OMT) which is constructed to pass left-hand circularly polarized RF, but to severely attenuate right-hand circularly polarized RF returns. Since the transmitted pulse was right-hand circularly polarized, the overall effect is to emphasize meteorological targets at the expense of other airborne targets. The polarization of the OMT is implemented by a sloping septum polarizer. A dielectric plate is introduced in the feed assembly oriented at 45° to the electric field vector. The length of this

septum is chosen so that at transmission the component of the electric field parallel to the septum is delayed 90° relative to the component that is perpendicular to the component. The two components are now aligned with orthogonal axes, perpendicular to the direction of propagation and separated by a quarter wave length along the line of propagation. An observer at a given point along the line of propagation would experience a rotating about the line of propagation of the passing E field. Upon return, the two components are brought into coincidence or cancellation depending upon whether the sense of rotation has reversed or remained the same, respectively.

5-4.3.2 Receiver Waveguide Switch. Receiver Waveguide Switch UD2A1S1 (Figure FO5-5, sheet 2, 9B) is used only in redundant systems. It is controlled by an operator command initiated at the Distant MSCF for FAA redundant systems, or the remote RDA maintenance terminal for NWS redundant systems. The operator selects which channel is active. The waveguide switch directs the received RF signal to the receiver protector assembly of the active channel. The non-active channel is connected to Low-Power Terminator UD2A1AT3.

5-4.3.3 Transmit/Receive Function. See Figure FO5-5, sheet 1 (sheet 2 for redundant systems). When the high-power RF pulse enters the antenna feed from the transmitter, some RF energy will leak through the antenna feed path leading to the receiver. To prevent damage to the sensitive receiver parts, the RF High Power Receiver Protector UD2A3 or UD2A7* is situated between the Bandpass Filter UD2A1A3FL1 or UD2A1A3FL2* and the antenna feed. The receiver protector receives the receiver protection command (drive signal) from the synchronizer in the HSP 6.5 microseconds before the transmission reference time $T_0$. The RCVR PROTECT CMD signal from the synchronizer is passed through the Receiver Interface UD4A32, then to the receiver protector. The receiver interface provides electrical isolation between the HSP and the receiver. The diode switch in the receiver protector responds to the drive signals and prevents the RF from entering the bandpass filter and the low noise amplifier (LNA). The diode switch also communicates that it is closed to the diode status monitor. The diode status monitor sends receiver protection response (RCVR PROTECT RSP) back to the synchronizer, acknowledging that the receiver is protected, allowing the transmitter to send the high-power RF pulse to the antenna feed. The HSP removes the receiver protection command when its monitoring circuits indicate that the transmitter's cathode current pulse has ended. The passive diode limiter limits the maximum amount of RF energy entering the bandpass filter and the LNA when the diode switch is open, and when receiving a radar echo (return) or a test signal. A test signal, from the test source select section (refer to paragraph 5-4.6 ), can be introduced through a 20 dB directional coupler located inside the receiver protector, into the diode switch.

5-4.3.3.1 Bandpass Filtering. See Figure FO5-5, sheet 1 (sheet 2 for redundant systems). If presented with multiple high energy signals, the LNA may saturate. When this happens, the LNA may have reduced gain at the site frequency and it may also generate spurious signals near the site frequency in response to the out-of-band signals. These spurious signals may be processed by the receiver as valid radar returns, appearing as strobes on the radar products. To prevent this from happening, the Bandpass Filter UD2A1A3FL1 or UD2A1A3FL2* attenuates out-of-band energy before it reaches the LNA. The bandpass filter has a center frequency equal to the transmitted frequency (between 2.7 GHz and 3.0 GHz). The bandpass characteristics are as follows:

- - - - -

* Used in redundant systems.

| Attenuation | Bandwidth |
|---|---|
| 0.5 dB | 700 KHz min. (± 350 KHz min) |
| 30 dB | 50 MHz max. (± 25 MHz max) |
| 60 dB | 200 MHz max. (± 100 MHz max) |

5-4.3.4 RF Amplification. See Figure FO5-5, sheet 1 (sheet 2 for redundant systems). The Low Noise Amplifier (LNA) UD2A4 or UD2A8* amplifies the signal leaving the receiver protector (radar echo or test signal) before it leaves the antenna pedestal and then travels the long distance to the RF conversion stage in the receiver cabinet. The LNA is able to compensate for the attenuation that will occur between the pedestal assembly and the receiver cabinet. The LNA has a gain of 28 ± 0.5 dB.

5-4.3.5 RF Pre-Filtering. See Figure FO5-5, sheet 4. In the receiver cabinet, the output of the LNA is sent through the RF pre-filtering to the RF-to-IF conversion stage. The Preselect Bandpass Filter UD4A4 receives the LNA output after it passes through the Fixed Attenuator UD4A36 and the 20 dB Directional Coupler UD4DC2. A test signal from the test source select function can enter the tap of the directional coupler. The preselect bandpass filter has a center frequency equal to the transmitted frequency (between 2.7 and 3.0 GHz) with a center frequency accuracy of ± 2 MHz. The bandpass characteristics are as follows:

| Attenuation | Bandwidth |
|---|---|
| 0.2 dB | 5 MHz min. |
| 3.0 dB | 12 MHz min. to 17 MHz max. |
| 40 dB | 52 MHz max. |
| 60 dB | 90 MHz max. |

5-4.3.6 RF-to-IF Conversion. See Figure FO5-5, sheet 4. The RF-to-IF conversion function is implemented by the mixer-preamplifier and the matched bandpass filter.

5-4.3.6.1 Mixer-Preamplifier. The output from the preselect bandpass filter (radar echo or either one of two test signals) enters the Mixer-Preamplifier Assembly UD4A5 at J1. A 20 dB directional coupler, inside the mixer-preamplifier assembly, receives the input at J1. The signal that exits the tap of the directional coupler at -20 dB exits the mixer-preamplifier through J5. This RF IN TEST SAMPLE is sent to the fault isolation function. The output of the directional coupler enters a load isolator which prevents RF energy from reflecting back. The INPUT STALO SIGNAL is received at J2 by a 30 dB coupler inside the mixer-preamplifier. The signal that is tapped off the coupler exits J6 as STALO RF TEST SAMPLE and is sent to the fault isolation function. The STALO signal is created in the master signal generator function of the RF Generator UD4A1, 57.55 MHz lower than the transmitted frequency (transmitted frequency is between 2.7 and 3.0 GHz). The STALO signal (+15 ± 0.75 dBm, 50 ohm impedance) is then mixed with the RF echo signal to convert it to an intermediate frequency (IF) Doppler shifted from 57.55 MHz. This IF signal is amplified and passed through a bandpass filter with a center frequency of 57.55 MHz. The signal then enters a two way power divider, one half of which exits the mixer-preamplifier assembly at J4 and is sent to the Guard Band Amplifier UD4A14 of the interference detection section (if installed). The power gain from J1 to J4 is +4.20 dBm ± 0.75 dBm. The other half of the signal leaving the two way divider is sent through an IF amplifier and then through a 30 dB directional coupler. The

- - - - -

* Used in redundant systems.

MIXER PREAMP TEST SAMPLE from the tap exits the mixer-preamplifier through J7 and is sent to the fault isolation section. The main output of the directional coupler exits via J3 and has an overall power gain, from J1 to J3, of 20.25 dBm +1.0 dB or -0.75 dB.

5-4.3.6.2 Matched Bandpass Filter. See Figure FO5-5, sheet 4. The IF echo signal from the mixer-preamplifier assembly is sent through the Matched Bandpass Filter Assembly UD4A6. This improves the signal-to-noise ratio by eliminating non-signal frequencies outside the bandwidth (centered on the COHO frequency) of the narrowest transmitted pulse. This pulse is 1.57 microseconds long; therefore, the 3 dB bandwidth is 630 KHz. The wider 5.0 microsecond long pulses receive additional filtering to their narrower (210 KHz) bandwidth downstream by the PSP software. The Doppler frequency of any meteorological target is well within the bandwidth passed by either of these filters. The matched bandpass filter outputs pass via J2 to the Coaxial Delay Line UD4A7 and via a 6 dB directional coupler and J3 to the log channel. A further tap from the 20 dB directional coupler sends this filtered IF via J4 as a sample to the fault isolation function.

5-4.3.7 Log Channel Video Detection. See Figure FO5-5, sheet 6. A copy of the IF emerging from the Matched Bandpass Filter UD4A6 is sent to the Multiple Output Log Amplifier-Detector UD4A12 of the Log Channel Video Detection function (sheet 6). This detector, along with the AGC Controller UD4A13 and the attenuator (common to both the log and linear channel), implement an AGC function whose purpose is to increase the overall dynamic range of the receiver by permitting it to handle a much wider range of echo amplitudes than its most restrictive element, the downstream A/D Converter UD4A11, would otherwise permit. The AGC circuits attenuate strong echoes much more than mid-range echoes and do not attenuate weak signals at all. Figure 5-1 shows this overall AGC effect.

5-4.3.7.1 IF Signal. The IF signal at J1 is input to a log amplifier which provides 100 dB dynamic range detected output video signal proportional to the log of the input signal. The slope of the transfer characteristic is 25 mv/dB over the input dynamic range of -90 dBm. The following are video output reference points: +2.65 Vdc at 0 dBm input signal, +0.650 Vdc at -80 dBm input signal.

5-4.3.7.2 Multiple Output Log Amplifier - Detection. The Multiple Output Log Amplifier-Detector UD4A12 converts the IF input to the logarithm of the IF envelope, that is, the video waveform. The desired response of:

$$\text{Video} = k_1 + k_2 \log_{10} (\text{IF amplitude})$$

is illustrated by the smooth curve of Figure 5-1. The solid broken line in the same figure shows the piecewise linear approximation. It is implemented by cascading linear amplifiers with built-in limiting at each stage. Each stage accounts for one segment of the approximation. Once a stage has contributed to the output, the limiter ensures that it doesn't affect the output any further. Prior to each amplifier stage, the signal so far is tapped off to a detector which converts that portion to video. The multiple output log amplifier-detector provides five outputs. The LOG VIDEO TEST SAMPLE (J6) is sent to the fault isolation section. Jacks 2, 3, 4, and 5 output LOG VIDEO to the AGC Controller UD4A13, RDA Test Panel UD4J14, A/D Converter UD4A11, and the Interference Detection Processor UD4A19, respectively.

5-4.3.8 Automatic Gain Control. The AGC function is implemented by the Coaxial Delay Line UD4A7, the AGC Controller UD4A13, and the IF Attenuator UD4A8.

5-4.3.8.1 Coaxial Delay Line. See sheets 4 and 5 of Figure FO5-5. From the Matched Bandpass Filter UD4A6, the IF echo signal is sent towards the IF Attenuator UD4A8 via two paths. The output on J2 gets to the attenuator by passing through a Coaxial Delay Line UD4A7; while the output on J3 becomes the detected AGC CONTROLLER LOG VIDEO output of the Multiple Output Log Amp Detector (sheet 6) and undergoes considerable processing in the AGC Controller UD4A13 to become the attenuator control word. In order that the two signals (IF and control word) arrive in sync at the IF Attenuator UD4A8, the IF is delayed 400 nsec in the coaxial delay line. The amount of delay is designed to match that occurring in the other (control word) path. In this way, the attenuation is applied to the matching piece-in-time of IF signals.

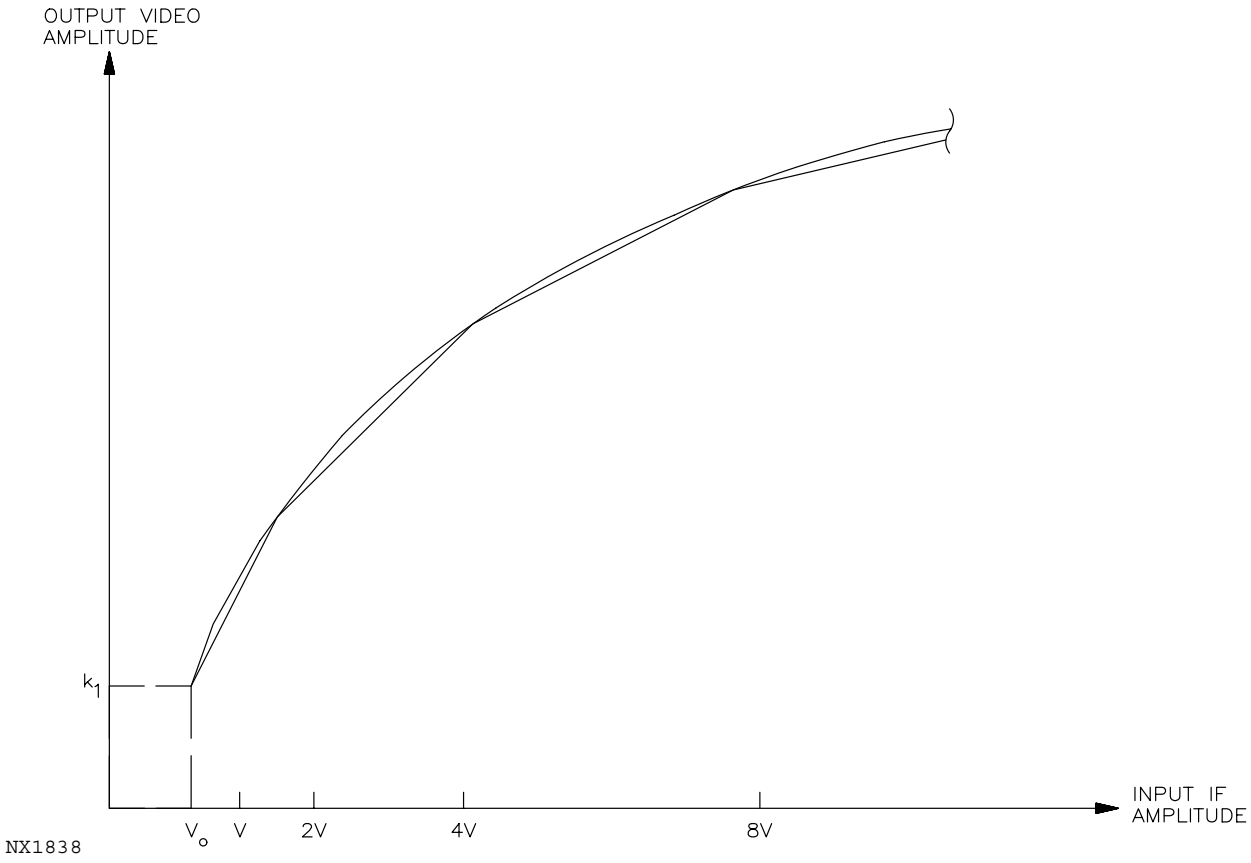


Figure 5-1. Log Amplifier Detector Function

5-4.3.8.2 AGC Controller. The AGC Controller UD4A13 (Figure FO5-5, sheet 5) completes the AGC path between the output of the log amplifier/detector and the control inputs of the IF attenuator. Controlled attenuation is zero for signal levels below a threshold which can be manually adjusted by A13R9. The threshold (Figure 5-2) is typically about 1.6V (or about -40 dBm input) at the log amplifier/detector output. Above the threshold, attenuation is called for at a rate of 1.5 dB per 37.5 millivolts (or about 2.5 dBm input rise). The key element in the AGC controller is the 6-bit high-speed A/D converter. The A/D converter output is a binary number which represents the attenuation required to maintain an approximately constant signal level at the input to the I and Q Phase Detector UD4A10, with a least significant bit weight of 1.5 dB. The pure binary number must be sent through an encoder to convert it to the form required by the IF attenuator. The number is

also sent to the HSP, through the AGC command bus, in its original binary form, so that the absolute signal magnitude can be reconstructed.

5-4.3.8.2.1 The attenuator is set to maximum attenuation as soon as I and Q have been sampled, and remains at this setting until the next A/D converter (in the AGC controller) output is clocked into it. Thus, the attenuation is maximum during most of the sample period, opening a window long enough for transients (in the IF Attenuator and any subsequent bandpass circuits) to decay before sampling at the track and hold circuits in the A/D Converter UD4A11 (Figure FO5-5, sheet 7) which feeds the HSP. This eliminates any possibility of saturating UD4A11 outside the window. It also ensures that time offsets between bits in the attenuator cannot cause spikes in the attenuator output; whenever any bits change, they all change in the same direction - away from maximum attenuation. This feature is implemented by adding select logic between the A/D converter and the encoder which can select either the converter output or a hardwired all "Ø"s which encodes to maximum attenuation. The select logic (multiplexer) is controlled by a 1 bit data register which is set to select maximum attenuation at the same time that the converter output is clocked into the attenuator. The sample clock is OR'ed into the attenuator clock line, and sets maximum attenuation at the end of the window. The 1 bit data register is changed to select the converter output again at a time after the sample clock but before the next attenuator clock. The timing is summarized below:

5-4.3.8.2.1.1 First attenuator clock (AGC Clock 2 delayed) reads the A/D converter output encoded into the attenuator and sets encoder outputs to put all ones (maximum attenuation) on the AGC position bus (IF attenuator control lines on cable UD4W410).

5-4.3.8.2.1.2 Second attenuator clock (sample clock) reads all ones from the AGC position bus into IF attenuator.

5-4.3.8.2.1.3 Trailing edge of sample clock puts zeros into the flip-flop, putting A/D converter output back on the IF attenuator control lines.

5-4.3.8.2.2 The high-speed A/D converter is clocked at AGC CLK1 corresponding to the beginning of the window, in addition to being clocked at the time corresponding to sampling at AGC CLK2 (the end of the window). The greater of the two readings is used to control the attenuator. Without this feature, a signal decreasing during the window might cause saturation at its beginning, since the attenuator setting is calculated for the end of the window. This feature is implemented by adding a register to hold the first converter output, and a comparator to compare this register to the second converter output. The multiplexer described above is extended to accept the register as another input, and the comparator causes either the register or the converter to be selected at the time when the multiplexer output is clocked into the attenuator. Figure 5-3 illustrates these AGC loop functions.

5-4.3.8.2.3 During AGC calibration, the attenuator is controlled by an external signal (AGC TEST DATA) instead of by the output of the log amplifier/detector. To implement this, a TEST AGC SEL is brought into the select logic and, when active, causes the selection of the AGC TEST DATA instead of log video data from the internal A/D converter. The timing is the same as for the log video signal. Maximum attenuation is called for, except during the sampling window.

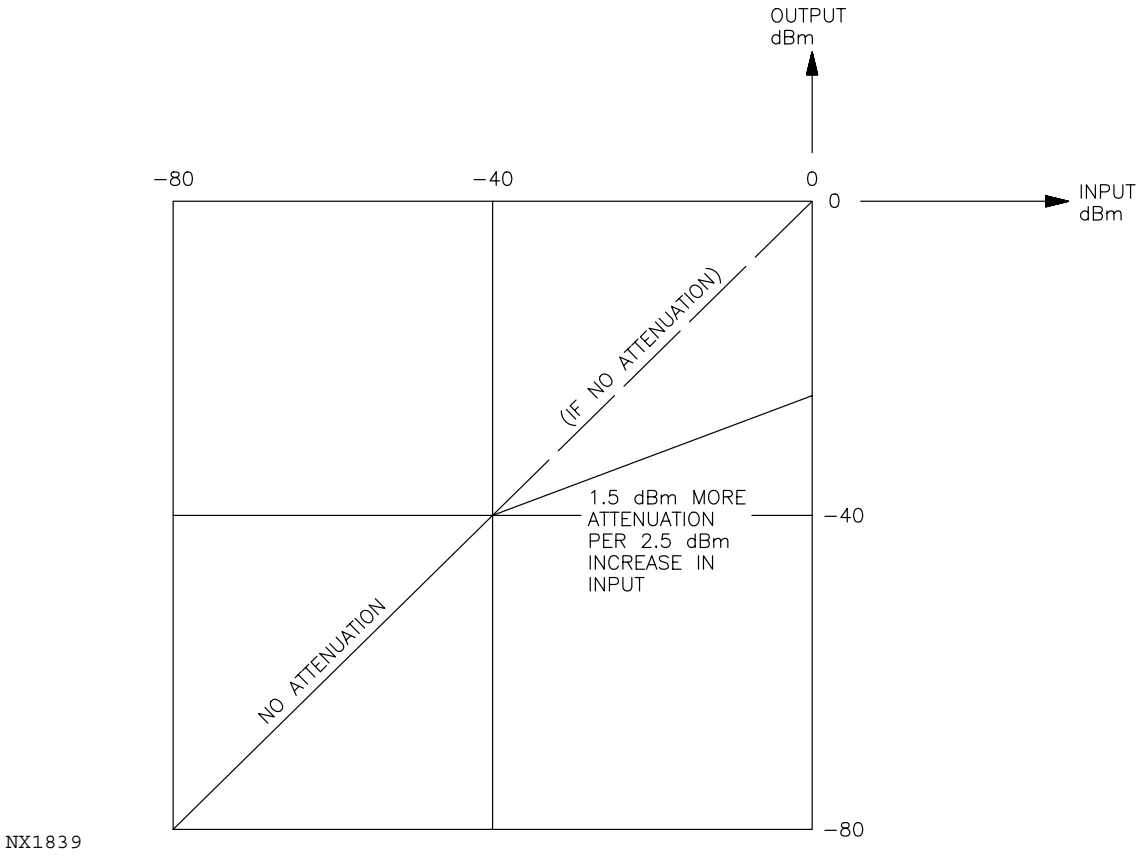


Figure 5-2. AGC Effect on Varying Inputs

5-4.3.8.3 IF Attenuator. The IF Attenuator Assembly UD4A8 is used to increase the overall linear dynamic operating range through AGC operations. J1 on the IF attenuator assembly receives the linear channel IF from the coaxial delay line. This signal is input to a 20 dB directional coupler. The output of the directional coupler goes to an amplifier. The tap output is sent out J3 as COAX DELAY LINE TEST SAMPLE to the fault isolation section. The amplifier gain is such that the combination of the amplifier's gain and the 6-bit attenuator's insertion loss (attenuator setting 0 dB) provides an overall unit gain of 0 ± 0.5 dB. The output from the amplifier is sent to the 6-bit attenuator. The 6-bit attenuator has an attenuation range of 0 to 58.5 dB. The amount of attenuation applied to the IF linear channel signal is determined by the AGC Controller UD4A13 which sends a 6-bit parallel word to the IF attenuator. This word is input to a set of flip-flops and is clocked out, into switch drivers, by a 23 MHz clock. Each bit controls a different switch, which controls a different amount of attenuation (refer to Table 5-2). The total attenuation is the sum of the amounts contributed by each of the six stages. The output from the attenuator, ATTENUATED (COMPRESSED) IF, is sent to J2, and is the input at J1 of the IF Amplifier-Limiter UD4A9 (Figure FO5-5, sheet 6).

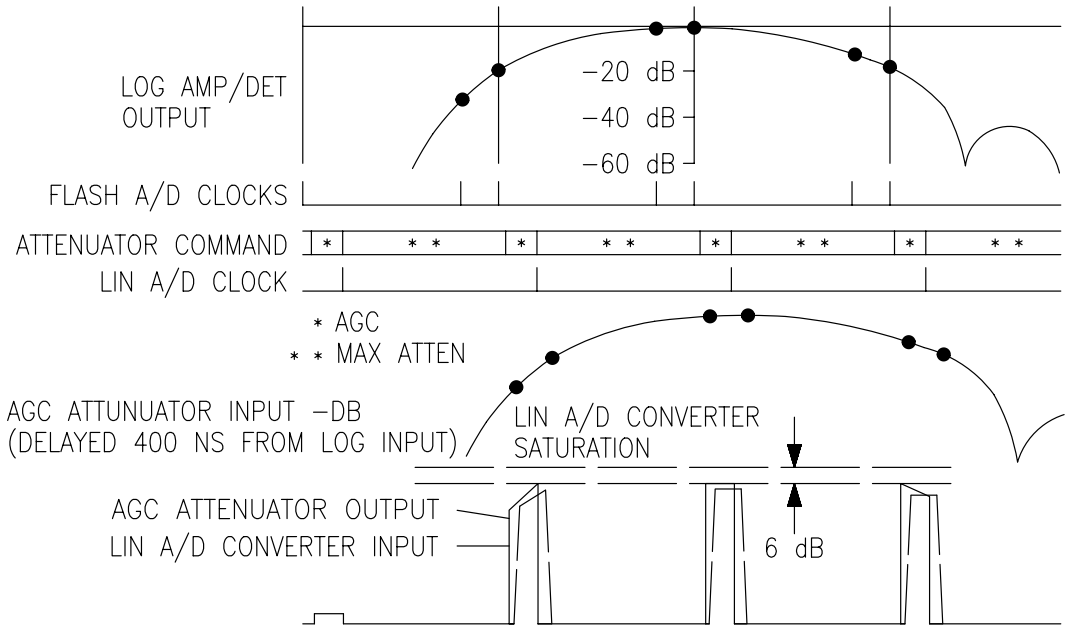


NX1840

Figure 5-3. Instantaneous AGC Timing-Point Target

Table 5-2. IF Attenuation Increments

| J5 Pin | Logic State | Attenuation Added (dB) |
|---|---|---|
| 7 | 0 | 0 |
| | 1 | 1.5 |
| 8 | 0 | 0 |
| | 1 | 3.0 |
| 6 | 0 | 0 |
| | 1 | 6.0 |
| 3 | 0 | 0 |
| | 1 | 12 |
| 2 | 0 | 0 |
| | 1 | 12 |
| 1 | 0 | 0 |
| | 1 | 24 |

5-4.3.9 Linear Channel Video Detection. This function is implemented by the IF Amplifier-Limiter UD4A9 and the I/Q Phase Detector UD4A10. (See Figure FO5-5, sheet 6.)

5-4.3.9.1 IF Amplifier-Limiter. The IF echo signal enters the IF amplifier-limiter via J1 to a 20 dB directional coupler. It is sent to a limiter which limits inputs above +10 dBm for the protection of the I/Q Phase Detector UD4A10. The signal is then sent through an amplifier, an attenuator with manual gain adjustment, and another amplifier. The adjustable gain control permits adjustment of the overall gain of the IF amplifier-limiter between 35 and 45 dB. The signal is then sent through a bandpass filter with a 3 dB bandwidth of 15.5 MHz centered on the COHO frequency of 57.55 MHz. The filter reduces noise introduced by the switching of the IF Attenuator UD4A8, the limiter, and wideband amplifiers of this unit UD4A9. The signal is then sent through the third amplifier and output via a second directional coupler and J2 to the I/Q phase detector where it will be converted to video. The two directional couplers, one at input and one at output, tap 20 dB reduced samples for the fault isolation function. These input and output samples exit at J3 and J4, respectively.

5-4.3.9.2 I/Q Phase Detector. The IF echo signal from the IF Amplifier-Limiter UD4A9 enters this I/Q Phase Detector UD4A10 via J1 and is divided power wise into two theoretically equal halves. One will become the I video by being mixed with the COHO (coherent oscillator) reference. The other will become the Q video by being mixed with a 90° shifted COHO. The 57.55 MHz COHO from the master signal generator function in the RF Generator UD4A1 enters via J2 and a directional coupler. The signal from the 30 dB tap of the directional coupler is sent via J3 to the fault isolation function while the direct output goes to a 3 dB hybrid circuit. The hybrid splits the COHO signal into two and phase shifts one 90° while leaving the other unshifted. Each of these two COHO references is mixed with one of the IF echo signals to have 57.55 MHz subtracted from the IF and thereby form the I (in-phase) and Q (quadrature) videos. The I and Q videos together preserve the amplitude and phase information of the echo. The amplitude can be obtained from the square root of $(I^2 + Q^2)$ while the phase is given by the arctangent of (Q/I). The use of I and Q data facilitates downstream digital processing. Each video then passes through a gain adjustment which permits balancing the I and Q channels. The adjustment is by a 10-turn screwdriver type potentiometer which permits a range of gains between one and seven. Each video signal passes through a video amplifier which has a DC offset canceling adjustment potentiometer. The DC offset adjustment range is plus 100 mv to minus 100 mv and is implemented with a 10-turn screwdriver type potentiometer. The I and Q videos are each sent through its own buffer and then J4 and J6, respectively to the A/D Converter UD4A11. The I and Q videos are also sent through another pair of buffers and then J5 and J7, respectively, to the RDA Test Panel test jacks 4J9 and 4J10. The load impedance of J4 through J7 is approximately 124 ohms and the output voltages are between plus and minus 4 Vdc.

5-4.3.10 Video A/D Conversion. See Figure FO5-5, sheet 7. The A/D Converter UD4A11 accepts analog video on three channels: I, Q, and log. It converts these inputs to 12-bit two's complement digital data for every 250 meter range interval sample. Such sampling intervals correspond to a sampling and conversion frequency of 0.6 MHz. The A/D converter adds bias corrections to the I, Q, and log video and can replace all three with test data.

The inputs and their sources are:

| Input Signals | Source |
|---|---|
| I and Q Video | I/Q Phase Detector UD4A10 |
| Log Video | Multiple Output Log Amplifier-Detector UD4A12 |
| Test/Bias data | HSP, Control Interface B UD5A10A3 |
| Test/Bias clocks | HSP, Control Interface B UD5A10A3 for Test Signals and HSP Synchronizer UD5A10A4 for Bias Clocks |
| A/D Converter clocks | HSP, Control Interface C UD5A10A5 |
| Test (mode selection) | HSP, Control Interface B UD5A10A3. |

All of these signal inputs enter the A/D converter by way of differential receivers on two wires. This minimizes ground loop noise pickup. The differential receivers include opto-isolators to eliminate digital noise feedback to the receiver's analog circuits.

5-4.3.10.1 Relays K1 through K3. Three relays, K1 through K3, switch between having the track and hold circuits process echo returns in the form of I, Q, and log video and having them receive no inputs so the A/D converter can process test data. The relays are controlled by the TEST signal which enters at J5 pins 5 and 24 and then goes to a differential receiver whose output energizes the relay coils. The track and hold (T/H) circuits sample the I, Q, and log video in synchronization with the LIN T/H CLK (for I and Q) or the LOG T/H CLK (for the log video). From the track and hold circuits, the three video signals enter separate adders where bias corrections are applied, and then these bias-corrected videos enter the A/D converters. This is a dividing line in the WSR-88D system. Prior to this point, from transmitter through all the antenna, microwave, receiver functions, the signals were analog. From this point on, all the RDA processing is done digitally. The I, Q, and log data, or the test data, leaves the A/D converters as 12-bit parallel digital words. They are immediately converted to equivalent serial words in separate parallel-to-serial converters. The three sets of data plus a pair of clocks are passed through differential drivers and sent on dual wire paths via J5 to the HSP Prescaler UD5A10A6. The dual wires eliminates ground path noise injection while the serial transmission reduces inter-cabinet wiring requirements.

5-4.3.10.2 Bias Distortion. The bias distortion which the receiver adds to the data is estimated by an on-line calibration sequence performed during transitions between elevation cuts. (Refer to Section 5-6 .) During this time, the transmitter is inactive; therefore, the average output of the receiver is a measure of the bias it is imposing on returns when transmissions are being processed. This bias is computed in the PSP, routed through the HSP, and enters (when not in test mode) on pins 6 and 25 of J5. It is accompanied by a BIAS DATA CLK on pins 7 and 26 of J5. The data and clock enter separate differential receivers and the serial-to-parallel converter. The parallel format bias data for I, Q, and log is then converted to analog so that it can be added as corrections to the still analog I, Q, and log video data. The processing of these three main signals has been described in the preceding paragraphs.

5-4.3.10.3 A/D Converter Test Signals. The test signals for A/D Converter UD4A11 are activated by the RDASOT program running in the RDASC processor. The RDASOT verifies the

analog-to-digital conversion logic. Test numbers in digital form are sent through the PSP and HSP to the A/D converter in the receiver. They travel the same route that the bias corrections do when operating normally (not in this test mode). Since the normal video signals have been blocked at the relays, energized by the TEST signal, the only signals now reaching the three summation points are the test signals from the RDASOT program. Being digital, they are first converted to analog. To test the A/D converters, they are returned to digital again by the A/D converter. After this, they travel the normal route to the HSP and are returned to the RDASC processor via the PSP. The RDASC processor determines if the returning values are sufficiently close to the original value sent to indicate a properly working A/D converter unit.

5-4.4 MASTER SIGNAL GENERATION.

The Master Signal Generation function is implemented by the RF Frequency Generator UD4A1 with its Plug-in Crystal Reference Frequency Oscillator UD4A1A1 and its link to the HSP via part of the Receiver Interface UD4A32. See Figure FO5-6.

5-4.4.1 Receiver Interface. There are thirty inputs to the frequency generation function, all from the HSP. They come by way of the Receiver Interface UD4A32 which provides electrical isolation for these signals. The inputs RCVR CLKs, RF GATE, and RECEIVER CTRL DATA, are discussed below.

5-4.4.1.1 RCVR CLKs. RCVR CLKs synchronize the RF frequency generator to the HSP.

5-4.4.1.2 RF GATE. RF GATE controls when the RF frequency generator sends RF DRIVE to the transmitter and the form of the RF TEST SIGNAL. RF DRIVE is only sent when the transmitter needs it to generate a pulse. RF DRIVE is not sent during the “dead time” between pulse transmissions. The RF GATE passes through isolation and buffer amplifier circuits, and then flows to the pulse modulator in the frequency generator where the on/off switching of RF DRIVE is implemented. The RF GATE output from the Receiver Interface UD4A32 is via J7, pins 19 and 37.

5-4.4.1.3 RECEIVER CTRL DATA. RECEIVER CTRL DATA contains the phase control bits which control the amount of phase modulation given to the COHO (coherent oscillator) input to the 7-bit digital phase modulator in the frequency generator. This Ø PHASE MOD COHO can replace the unshifted COHO in the PHASE COHO SEL part of RECEIVER CTRL DATA for test purposes. The Ø PHASE MOD COHO always becomes part of the RF DRIVE and RF TEST signals.

5-4.4.2 Frequency Generator. The outputs developed by the frequency generator are discussed in the following paragraphs:

During test mode, the phase shifter is used to add simulated Doppler shift to the RF TEST signals. During this application, the COHO chosen will be without phase shift. In this way the simulated Doppler will appear as a difference between the phase shift to the RF and no phase shift to the COHO.

5-4.4.2.1 Master Clock. A 9.6 MHz MASTER CLOCK is sent to the HSP Control Interface A UD5A10A1 card and is used for timing signals throughout the RDA.

5-4.4.2.2 IF COHO. A 57.55 MHz COHO SIGNAL is sent via J4 to the I/Q Phase Detector UD4A10 where it is used to convert the IF return to video frequencies.

5-4.4.2.3 RF Drive. An RF drive between 2.7 and 3.0 GHz (10 microsecond pulses at 10 milliwatts peak) is sent via J1 to the transmitter where the pulse width is reduced (1.5 to 5 microseconds) and it is amplified to become the transmitted RF carrier. The RF DRIVE signal frequency is selectable to whatever frequency is assigned to the site within the 2.7 GHz to 3.0 GHz operating band. Frequency selection to the assigned frequency is provided by means of plug-in crystal oscillators. The output RF DRIVE carrier is phase shifted with respect to the corresponding STALO signal. By giving each transmitted pulse a pseudo-random phase, it is possible to identify multiple time around returns. During this application, the COHO chosen must have a phase shift to match that given the RF DRIVE. If not, the difference in phase would be interpreted as additional Doppler shift beyond the valid Doppler shift.

5-4.4.2.4 STALO. A STALO (stable local oscillator) RF has a frequency that is 57.55 MHz (COHO frequency) less than the RF drive frequency. It is sent via J2 to the mixer-preamplifier in the RF conversion function to be mixed in with the RF echo radar return in order to convert the RF return to an IF frequency centered on the COHO frequency.

5-4.4.2.5 RF Test. An RF TEST signal is similar to the RF DRIVE. It is sent via J3 to the 4 Position RF (Diode) Switch UD4A22 to become, if chosen, a signal to check the receiver. The RF TEST signal may be a pulse or CW, depending on the RF GATE signal developed in the HSP. During test mode, the phase shifter is used to add simulated Doppler shift to the RF test signals. During this application, the COHO chosen will be without a phase shift. In this way the simulated Doppler will appear as a difference between the phase shift to the RF and no phase shift to the COHO.

It is, of course, possible to operate with no phase modulation. To do this, the Phase Control bits of RECEIVER CTRL DATA are set to zero by the program controlling the HSP. The outputs are developed in a rather indirect manner. This is to reduce the interference caused by sidebands, which are always produced when combining frequencies. There are fault monitoring circuits which sample the REF FREQ OSC, STALO, RF DRIVE, COHO, Ø PHASE MOD COHO, and MASTER CLOCK signals. Failure of any of their signals to remain within acceptable limits generates an appropriate failure bit which is transmitted via J5 to the monitoring function and results in RDA alarms.

## 5-4.5 INTERFERENCE DETECTION (OPTIONAL).

The optional interference detection circuits are shown on Figure FO5-7, sheets 1 and 2, and are explained as follows. Interference detection is implemented by the Guard Band IF Amplifier UD4A14, Upper (+) and Lower (-) Guard Band Filters UD4A15 and UD4A16, Log Amp Detectors UD4A17 and UD4A18, and the Detection Processor Assembly UD4A19. The Guard Band IF Amplifier UD4A14 (sheet 1) receives the IF signal from the mixer-preamplifier in the RF conversion function. The IF signal is divided into two, and each signal is amplified before one sent to the Upper Guard (+) Band Filter UD4A15 and the other to the Lower Guard (-) Band Filter UD4A16. The upper guard band filter passes a frequency band 6.5 MHz above the main (center) IF frequency (57.549 MHz). The lower guard band filter passes a frequency band 6.5 MHz below the main IF frequency. The outputs from the two filters are sent to separate log amplifier detectors, G+ and G- Log Amplifier Detectors, UD4A17 and UD4A18, respectively. The outputs from these two detectors are proportional to the log of the input power and are sent to the Detection Processor

Assembly UD4A19 (Figure FO5-7, sheet 2) along with the main log detector output. If either or both of the guard band log signals are greater than a noise threshold and the main channel log signal, then the detection processor sends a flag to the HSP. The HSP will not use any main channel data obtained during an interference flag. The reflectivity data from any interfering source greater than 3.25 MHz from center frequency will be replaced with the data from an adjacent range cell by the HSP. The velocity data will be set to zero.

5-4.5.1 Guard Band IF Amplifier. The Guard Band IF Amplifier UD4A14, (see Figure FO5-7, sheet 1) receives, at J1, the IF output from the power divider in the mixer-preamplifier. The input at J1 enters a 2-way power divider, the outputs of which are the upper and lower guard band channels. Each of the two signals has a gain adjustment which is capable of adjusting the gain over a range of +11.5 dB to +20.5 dB. The gain of the two channels is achieved by separate amplifiers located after each gain adjustment control. The output of each amplifier is input to a 20 dB directional coupler. The output from the taps on the directional couplers, for the upper and lower guard bands, are sent as IF test samples to the fault isolation function through J4 and J5, respectively. The primary outputs from the directional couplers are sent out J2 (G+) and J3 (G-). The upper guard band signal is sent to the input of the Upper Guard (+) Band Filter Assembly UD4A15. The lower guard band signal is sent to the input of the Lower Guard (-) Band Filter Assembly UD4A16.

5-4.5.2 Guard Band Filters. The two guard band filter assemblies and the main channel Matched Bandpass Filter UD4A6 are similar. The only difference is the center frequency of each. Both filters have the same bandpass characteristics shown below:

3 dB bandwidth is 630 KHz
4 dB bandwidth is 798 KHz
40 dB bandwidth is 3.15 MHz
60 dB bandwidth is 5.00 MHz.

The center frequency of the upper matched filter is 64.05 MHz, and the center frequency of the lower matched filter is 51.05 MHz. These are equally spaced about 6.5 MHz above and below the 57.55 MHz COHO frequency. The purpose of the two guard band filters is to pass frequencies that are at the upper and lower edges of the mixer-preamplifier IF bandwidth. Each of the guard band filter assemblies performs the same internal operation. A matched filter receives the input from the guard band IF amplifier. The filter output is sent to a directional coupler for distribution to J2 and J3. The IF test sample from the directional coupler tap is sent through J3 to the fault isolation function. The main output goes through J2 to the appropriate Multiple Output (G+ and G-) Log Amplifier Detector, UD4A17 and UD4A18.

5-4.5.3 Log Amplifier-Detectors. The log amplifier-detectors are identical to the main Multiple Output Log Amplifier-Detector UD4A12 discussed earlier in paragraph 5-4.3.7.2 , except that the center frequency of operation in each is the same as the guard band filter assembly it is associated with. Only two of the output ports are connected on each of these two multiple output log detectors/amplifiers. The output port J4 of the upper and lower guard band log amplifiers are sent as G+ LOG VIDEO TEST SAMPLE and G- LOG VIDEO TEST SAMPLE, to the fault isolation section. The signals on the two output ports, labeled J2, are sent to the Detection Processor Assembly UD4A19.

5-4.5.4 Detection Processor. The function of the Detection Processor Assembly UD4A19 is to detect pulse interference from neighboring radars and generate an interference detection flag (Figure FO5-7 sheet 2) which is sent to the HSP. The HSP employs processing to minimize the effects of interference on the base data.

The detection processor generates the interference detection flag by comparing the magnitude of the three signals described below:

1. Log Video. This signal is received from the Multiple Output Log Amplifier Detector UD4A12. The log video represents the power output on a logarithmic scale of the main channel Matched Bandpass Filter UD4A6 (Figure FO5-5 sheet 4). The strength of this signal represents the received echo power following transmit, receiver noise, and pulse interference from neighboring radars, if present.
2. G+ Log Video. This signal is received from the Multiple Output (G+) Log Amplifier/Detector UD4A17 in the upper guard band channel. The frequency center of the upper guard band channel is located about 6.5 MHz above the center of the main channel. The strength of this signal represents the received echo power leakage into the guard band channel (generally very weak), receiver noise, and pulse interference from neighboring radars, if present.
3. G- Log Video. This signal is received from the Multiple Output (G-) Log Amplifier/Detector UD4A18 in the lower guard band channel. The frequency center of the lower guard band channel is located about 6.5 MHz below the center of the main channel. As for the G+ Log Video, the strength of this signal represents the received echo power leakage into the guard band channel (generally very weak), receiver noise, and pulse interference from neighboring radars, if present.

The interference suppression technique implemented in NEXRAD assumes that nearby pulse interference sources are not assigned to the same RF frequency as the NEXRAD radar. In other words, it is assumed that the interference is from the skirts of the spectrum of the interfering pulses. These skirts will tend to be broad band and will be picked up in the guard band channels surrounding the main channel as well as in the main channel.

The echo power leakage into the guard band channels is the result of finite guard band matched filter attenuation at the center frequency of the main channel and the finite transmitter spectrum amplitude at the center of the guard band matched filters. The leakage is unaffected by Doppler shifts which are insignificant (on the order of 20 KHz for a Mach 1 target). The leakage is down about 40 dB or more relative to the main channel. The leakage, while small, is not always negligible, as will be discussed in the following paragraphs.

The detection processor discriminates between interference and receiver noise on the basis of guard band signal strength. The receiver noise level is fixed, known, and small. A fixed threshold, called FT, (see Figure FO5-7, sheet 2) is set at about 14 dB (-750mV $\pm$ 5mV at TP8) above the average noise level. Comparisons between the guard band signal levels and FT prevent false interference detections on receiver noise. A condition for declaring an interference detection is that the guard band video exceeds FT in magnitude (note that the amplifiers are inverting).

The detection processor discriminates between interference and echo leakage by comparing the strength of the guard band signals to the log video. A leakage threshold, called LT, (see

Figure FO5-7 sheet 2) is formed by adding an offset voltage (present at TP4) to the log video. The offset biases the log video in the direction of the weaker echoes by about 21 dB (525 mV ± 5mV at TP4). For strong echoes, such as those from close in ground clutter, the LT threshold will rise above the FT threshold sufficiently to suppress false interference detections on echo leakage into the guard bands, but LT will be 21 dB smaller than the echo in the main channel. A condition for declaring an interference detection is that the guard band video exceeds LT in magnitude (note the amplifiers are inverting).

The threshold comparisons and logic following the comparisons are such that an interference detection is declared if it is detected in either guard band channel. The requirement for detection in each guard band channel is that both the noise and leakage thresholds are exceeded in magnitude.

The detection processor must present false alarms on pulse type echoes from point clutter. The pulse shape is the transmitter pulse shape after it passes through the matched filter. The wave shaping circuits and tapped delay line are there to prevent false alarms on the leading and trailing edge of the pulses.

It is also necessary to prevent false alarms on very strong echoes which saturate the main channel of the receiver. Since in this case the log video input under-estimates the true value of the echo, the detection processor includes an LT boost voltage circuit. A VSAT threshold is set near the top of the dynamic range (2775 mV ± 10 mV at TP7) of the receiver. When the log video exceeds this threshold, the LT threshold is increased about 20 dB.

5-4.5.4.1 Echo Signals. If the echo is weak or even moderate, the LT (which is based on the log video) is low and the interference decision is based on whether or not the guard band power exceeds the FT. The LT is used when the echo is so strong that considerable power leaks into the guard band frequencies. In such a case, a strong return with no interference would cause the guard band signal to exceed the FT and indicate interference. To prevent this, the LT, which floats with the strength of the log video, is implemented. The side band power must exceed not only the FT (effective for weaker returns) but also the floating LT (effective for very strong returns) before interference is declared.

5-4.5.4.2 Log Video Signal. (See Figure FO5-7, sheet 2.) When the log video signal is above the saturation level, the signal might get clipped. If the noise (guard band) level is high also, the flag might get set and, consequently, the large target signal might be ignored. To prevent this, the log video signal is boosted when it reaches the saturation level. It is boosted to LT to prevent the flag from being set because the log video is indicating a power level lower than it really is. The previously mentioned criteria concerning the G+ signal also apply to the G- signal.

## 5-4.6 RECEIVER TEST FUNCTION OVERVIEW.

The test signal generation and processing functions are shown in Figure FO5-4, sheet 2. There are two separate and distinct operational environments for these test functions.

5-4.6.1 On-Line . On-line (i.e., RDA application program running) refers to functions of calibration and performance monitoring from which many RDA alarms are divided.

5-4.6.2 Off-Line . The off-line (i.e., RDA application program down, RDASOT program running) refers to diagnostic fault isolation functions.

Table 5-3 lists the four types of test signals generated and their application.

Table 5-3. Receiver Test Function

| Test Signal Description | On-Line (See Notes) | Off-Line (See Notes) |
|---|---|---|
| CW | 1. AGC Calibration<br>2. Reflectivity Calibration (Velocity and Spectrum Width check) | RDASOT RCVR DIAG subtest 6, 7, 8, 9, 10, 12, 13, 15, 16, 20. (Refer to RDASOT Users Guide Appendix B |
| RF NOISE | 1. System Noise Temp. Check. | RDASOT RCVR DIAG - Tests of guard band components. |
| RF DRIVE SAMPLE | 1. Lin, Log Reflectivity Calibration, Velocity and Spectrum Width Check performed for every volume scan. | RCVR DIAG Subtest 4. |
| KLYSTRON SAMPLE DELAYED (10 μSEC) | 1. Reflectivity Calibration Check once per 8 hrs.<br>2. Clutter Suppression Check once per 8 hrs. | RCVR DIAG Subtest 5. |

**NOTES**

A description of on-line calibration procedures, checks, and the alarms resulting from them are contained in paragraph 5-4.9 .

A description and operational instructions for all off-line diagnostic tests are contained in the RDASOT User's Guide, NWS EHB 6-510-2.

5-4.6.3 RF Test Signal Generation. The RF Test Signal Generation functions provide an interface for receiver control data and select one of four test signals for routing to one of two destinations. The selection and control data demux circuit receives the receiver control data word from the HSP. It routes this data to the master signal generation and the RF test signal processing functions. The HSP also demultiplexes and routes control signals to the wideband noise generation, input signal switching, RF test signal amplitude control, and RF test signal injection point selection circuits. The four test signals applied to the input signal switching circuit are: the output of the wideband noise generation circuit, CW test signal from the master signal generation function, a klystron RF drive sample from the transmitter, and a pulsed high power RF sample from the microwave distribution via the HP sample and delay circuit. One of these signals is selected, when required, and amplified to the specified level by the RF test signal amplitude control circuit. The RF test signal injection point selection circuit routes the amplified RF test signal to either the receiver front end or the RF conversion circuits in the receiver channel. RF test samples, from the various circuits, are also sent to the RF test signal processing function.

5-4.6.4 RF Test Signal Processing. Upon command, the RF Test Signal Processing function reads test data from one of many receiver monitoring points and transfers the data to the HSP. The RF/IF test sample selection control data demux circuit demultiplexes the receiver control data word into discrete fault monitoring bytes and control line commands. In response to the sample selection control signal, the RF/IF test sample selection circuit selects one RF monitor point and one IF monitor point. The selected RF and IF test signals are converted to log video by the RF/IF test sample video detection circuit. These two signals, together with other video test signals, are applied to the detected test sample selection and processing circuit. This circuit selects one of the test signals, applies proper scaling, and converts it to parallel digital test video. The receiver status data interface circuit converts the test video data from parallel to serial form and transfers it to the HSP.

5-4.7 RF TEST SIGNAL GENERATION.

The RF Test Signal Generation functions are shown on Figure FO5-8, sheets 1 through 3. These functions combine to select one of four possible RF test signals to be injected at Receiver Protector UD2A3 or UD2A7* in the transmit/receiver function or at the RF channel tuning function prior to Preselect Bandpass Filter UD4A4. The RF test signal generation functions discussed in this paragraph are listed as follows:

- Selection and Control Data Demux Function
- Klystron Pulse Sample Scaling and Delay
- Wideband Noise Generation
- Input Test Signal Switching
- RF Test Signal Amplitude Control
- RF Test Signal Destination Selection

Testing is implemented by the RDASC processor in normal operating mode during elevation transitions and when running the RDA System Operability Test (RDASOT).

5-4.7.1 Selection and Control Data Demux Function. The Selection and Control Data Demux function is shown on Figure FO5-8, sheet 3. The Receiver Interface Assembly UD4A32 receives the receiver control data and clocks from the HSP at J9. The receiver control data contains the data for the command and control signals used in the RF test source select and receiver fault isolation functions. The 4-Position RF Switch UD4A22 and 2-Position RF Switch UD4A24 switching action is controlled by the receiver control data. The clock inputs are used to clock the receiver control data for proper command and control signal generation. The receiver control data, when sorted in the receiver interface, provides four control signals as follows:

- Noise Source Control
- Input Test Signal Select Control
- RF Digital Attenuator CTRL Data
- 2-Position RF Switch Control

- - - - -

* Used in redundant systems.

The noise source control signal determines whether or not the RF Noise Source UD4A25 should be activated. The input test signal select control signal determines which of the four inputs will be selected by the 4-Position RF Switch UD4A22. The RF digital attenuator control data signal determines the amount of attenuation which will be applied by the RF Digital Attenuator UD4A23. The 2-position RF switch control signal determines which of the two possible destinations, receiver front end or cabinet injection, will receive the RF test signal.

5-4.7.2 Klystron Pulse Sample Scaling and Delay. This function is shown on Figure FO5-8, sheet 1. The KLYSTRON OUTPUT SAMPLE is input to the 4-Way Power Divider UD4A20. The output at J3, KLYSTRON POWER METER SAMPLE, is sent to the Transmitter Power Monitor UD4A26. The output at J2 is attenuated and then sent to a 40 dB directional coupler. The output from the tap of the Directional Coupler UD4DC1, KLYS OUT -40DB TEST SAMPLE, is sent to the fault isolation function. The primary output of the directional coupler goes to the Microwave Delay Line UD4A21. The microwave delay line provides 10 microseconds of delay to the KLYSTRON OUTPUT SAMPLE. When the delayed klystron output pulse is selected as the test signal to be injected in the receiver, it will appear somewhat like a received target echo signal because of its time delay. The output from the microwave delay line, DELAYED KLYS OUT TEST SAMPLE signal, goes to the 4-Position RF Switch UD4A22 which amplifies the test signal.

5-4.7.3 Wideband Noise Generation. The RF Noise Source UD4A25 on Figure FO5-8, sheet 1 receives the NOISE SOURCE CONTROL signal from the receiver interface at J2, pins 7 and 8. The WIDEBAND NOISE TEST SIGNAL generated (which is used to test the receiver channel sensitivity performance) goes to the 4-Position RF Switch UD4A22. The RF noise source generates the test signal when the drive signal is high (1) at J2 pin 8 and low (Ø) at J2 pin 7.

5-4.7.4 Input Test Signal Switching. The 4-Position RF Switch UD4A22, shown on Figure FO5-8, sheet 1, selects the desired test signal for input to the RF conversion function or receiver front end. The output from the 4-position RF switch is not input directly to the receiver; it is processed through the RF Digital Attenuator UD4A23 and the 2-Position Switch UD4A24 first. The 4-position RF Switch selects one of four inputs, which are as follows:

5-4.7.4.1 Frequency Generator RF Test Signal. FREQ GEN RF TEST SIGNAL, from the RF Frequency Generator UD4A1 in the master signal generator section, is input through J3.

5-4.7.4.2 Wideband Noise Test Signal. WIDEBAND NOISE TEST SIGNAL, from the RF Noise Source UD4A25, is input through J4.

5-4.7.4.3 Delayed Klystron Output Test Sample. DELAYED KLYS OUT TEST SAMPLE from the M/W Delay Line UD4A21, is input through J1. This signal originates in the transmitter, and is sampled at Directional Coupler UD1DC1.

5-4.7.4.4 Klystron RF Drive Sample. KYSTRON RF DRIVE SAMPLE, from the Transmitter Pulse Shaper UD3A5, is input through J2.

5-4.7.4.5 4-Position RF Switch. The 4-Position RF Switch UD4A22 has an operating frequency range of 2.7 to 3.0 GHz and a maximum insertion loss of 3 dB. The 4-position RF switch contains two 30 dB directional couplers. One directional coupler sends a sample of the Klystron RF Drive Sample from its tap through J6 to the fault isolation function. The other directional coupler

sends a sample of the FREQ GEN RF TEST SIGNAL from its tap through J7 to the fault isolation function.

5-4.7.4.6 Input Test Signal Select Control Signal. The INPUT TEST SIGNAL SELECT CONTROL signal from Receiver Interface UD4A32 is a differential drive, two-state voltage input through J8 which selects one of the four RF signals to be output through J5 and sent on to the RF Digital Attenuator UD4A23. The operation of the 4-position RF switch is indicated by Table 5-4.

Table 5-4. Control Drive Signal

| | | Position 1 | | Position 2 | | Position 3 | | Position 4 | |
|---|---|---|---|---|---|---|---|---|---|
| Switch Input | Condition Output | 1 (Pin 6) | 2 (Pin 8) | 1 (Pin 10) | 2 (Pin 12) | 1 (Pin 7) | 2 (Pin 9) | 1 (Pin 11) | 2 (Pin 13) |
| Open | | Ø | 1 | Ø | 1 | Ø | 1 | Ø | 1 |
| J1 | J5 | 1 | Ø | Ø | 1 | Ø | 1 | Ø | 1 |
| J2 | J5 | Ø | 1 | 1 | Ø | Ø | 1 | Ø | 1 |
| J3 | J5 | Ø | 1 | Ø | 1 | 1 | Ø | Ø | 1 |
| J4 | J5 | Ø | 1 | Ø | 1 | Ø | 1 | 1 | Ø |

5-4.7.5 RF Test Signal Amplitude Control. RF Digital Attenuator UD4A23 (Figure FO5-8, sheet 2) contains a 7-bit digitally controlled attenuator which takes the RF signal, selected by the 4-position RF switch, and attenuates it to the level selected by the HSP, and sends it to the 2-position RF switch. Inside the RF digital attenuator, a 30 dB directional coupler taps off a sample of the input signal and sends it to the fault isolation section through J4. Also, inside the RF digital attenuator, a 20 dB directional coupler taps off a sample of the output signal and sends it to the fault isolation section through J3. The main output is sent to the 2-position RF switch through J2. The insertion loss from the input (J1) to the output (J2) without any attenuation bits set is a maximum of 6.5 dB. The attenuation level per bit (in dBs) is as follows: 1.0, 2.0, 4.0, 8.0, 16.0, 32.0, and 40.0 for the seven bits. The attenuation is accurate within $\pm$ 0.7 dB. The control signal bits are differential drive, two-state voltage inputs which control the condition (low or high insertion loss) of the attenuator bits. The way the control bus sets the attenuator bits is explained by Table 5-5 and Table 5-6.

5-4.7.6 RF Test Signal Destination Selection. In the 2-Position RF Switch UD4A24 (Figure FO5-8, sheet 2), a single-pole double-throw switch receives the designated RF test signal to be injected into one of two receiver injection points. The switch is controlled by a two-bit control bus to select one of the two outputs as the RF test signal destination. The two outputs are UD2 RF TEST SIGNAL at J2 to the Receiver Protector UD2A3 or UD2A7* as the receiver front end injection point and UD4 RF TEST SIGNAL at J3 that is sent to Directional Coupler UD4DC2 as the receiver cabinet injection point. With the switch in either closed position, the insertion loss is 2.5 dB maximum over the operating frequency range of 2.7 to 3.0 GHz. The control signal is a differential drive, two-state voltage input which controls the position of the diode switch. An explanation of how the control bus operates the switch is shown in Table 5-7. Before RF test signal is output

- - - - -

* Used in redundant systems.

through J2, it is sent through a 20 dB directional coupler. The output from the tap of the directional coupler is sent through J4 to fault isolation function.

Table 5-5. RF Digital Attenuator Operation

| Insertion Loss | Drive Signal 1 | Drive Signal 2 |
|---|---|---|
| Low | Ø | 1 |
| High | 1 | Ø |

Table 5-6. RF Digital Attenuator Control

| Pins | Function | |
|---|---|---|
| 1 | Drive Signal 1 | (1 dB) |
| 2 | Drive Signal 2 | |
| 3 | Drive Signal 1 | (2 dB) |
| 4 | Drive Signal 2 | |
| 5 | Drive Signal 1 | (4 dB) |
| 6 | Drive Signal 2 | |
| 7 | Drive Signal 1 | (8 dB) |
| 8 | Drive Signal 2 | |
| 9 | Drive Signal 1 | (16 dB) |
| 10 | Drive Signal 2 | |
| 11 | Drive Signal 1 | (32 dB) |
| 12 | Drive Signal 2 | |
| 13 | Drive Signal 1 | (40 dB) |
| 14 | Drive Signal 2 | |

Table 5-7. 2-Position Switch Operation

| Input | Output | Drive Signal 1 (Pin 8) | Drive Signal 2 (Pin 9) |
|---|---|---|---|
| J1 | J2 | Ø | 1 |
| J1 | J3 | 1 | Ø |

5-4.8 RF TEST SIGNAL PROCESSING.

The RF Test Signal Processing function gathers data samples of analog signals at various frequencies from throughout the RDA Group and converts them into a sequence of digital test samples. See Figure FO5-9, sheets 1 through 4. It is done under the direction of the receiver control word from the HSP via the RF test select and control function. The digitized test samples,

along with collected fault signals and repeat back data, are selected by the receiver control word for transmission to the HSP, then to the PSP, and finally to the RDASC processor during the performance of off-line diagnostics using RDASOT. The RDASC processor generates alarms and fault messages which are displayed at the maintenance console.

The RF Test Signal Processing functions discussed in this paragraph are listed as follows:

- RF/IF Test Sample Selection
- RF/IF Test Sample Detection
- Detected Test Sample Selection and Processing
- Receiver Status Data Interface Function

5-4.8.1 RF/IF Test Sample Selection. The RF/IF Test Sample Selection function shown on Figure FO5-9, sheet 1 includes a Multi-Position IF Switch UD4A28 and a Multi-Position RF Switch UD4A27. Inputs to the IF and RF switches are the test samples that are output from the receiver functions previously discussed. The IF test samples are input to the IF Switch UD4A28 and the RF test samples are input to the RF Switch UD4A27. The RF/IF TEST SAMPLE SELECTION CONTROL data bits are received from the HSP via the Receiver Interface UD4A32 and enter the RF/IF switches at J11. Of all the RF/IF samples brought to the monitoring circuits, only one at a time is allowed to pass through the multi-position RF or IF switches. The sequencing is controlled by the receiver control data which is buffered in the receiver interface and then decoded to drive the one switch at a time which passes one of the RF/IF signals. The selected RF/IF test samples are sent to the RF/IF test sample detection function (Figure FO5-9, sheet 2).

5-4.8.2 RF/IF Test Sample Detection. The RF and IF detection circuits are shown on Figure FO5-9, sheet 2. The detection circuits consist of RF and IF Log Amplifier-Detectors UD4A29 and UD4A30. The inputs are the selected RF/IF test samples from the multi-position RF and IF switches. The sampled signals are all headed for the A/D converter in the RF/IF Test Monitor UD4A31. The circuits in the test monitor were designed to handle video frequencies, therefore, both the RF and the IF test samples must first be converted to video frequencies.

5-4.8.2.1 RF Log Amplifier-Detector. The RF Log Amplifier-Detector UD4A29 provides an output video signal proportional to the log of the RF input signal power and is used for RF processing at the RF/IF Test Monitor UD4A31. The RF log amplifier-detector accepts the signal to be tested, which was chosen by the multi-position RF switch, and applies the transfer characteristic. The transfer characteristic provides an output of 500 mv DC for a -40 dBm input, and a 2500 mv DC output for a Ø dBm input. The slope of the transfer characteristic is 50 mv/dB.

5-4.8.2.2 IF Log Amplifier-Detector. The IF Log Amplifier-Detector UD4A30 accepts the signal to be tested which was chosen by the multi-position IF switch and applies the transfer characteristic. The transfer characteristic provides an output of 600 mv DC for a -70 dBm input, and a 2700 mv output for a Ø dBm input. The slope of the transfer characteristic is 30 mv/dB.

5-4.8.2.3 Log Video Output. The detected log video outputs (J2 of each log amplifier-detector) are sent to the RF/IF Test Monitor UD4A31 which is part of the detected test sample selection and processing function on Figure FO5-9, sheet 3.

5-4.8.3 Detected Test Sample Selection and Processing. This function contains an RF/IF Test Monitor UD4A31 which receives the test samples for processing and conversion to digital test video which is output at J2 and sent to the Receiver Interface Assembly UD4A32.

5-4.8.3.1 RF/IF Test Monitor. The RF/IF Test Monitor UD4A31 (see Figure FO5-9, sheet 3) selects one of the following input analog signals:

- Detected IF (Log Video) Test Sample (J5) from the IF Log Amplifier-Detector
- Detected RF (Log Video) Test Sample (J4) from the RF Log Amplifier-Detector
- G+ Log Video Test Sample (J7) from the Upper Guard Band Filter
- G- Log Video Test Sample (J8) from the Lower Guard Band Filter
- Log Video Test Sample (J6) from the Log Amplifier Detector UD4A12 in the IF and video processing function

The analog inputs are buffered and applied individually to relays K1 through K5. The relays are controlled by the selection and processing control data sent from the receiver interface (sheet 2) to the binary-to-octal converter of the RF/IF test monitor. The converter outputs control the relays that select one of the five video inputs. The data also controls other relays that assist in the selection of the bandwidth of the video signal to be passed through the appropriate individual amplitude compensation resistor of the voltage scaling network to the analog-to-digital converter. The eight bit digitized digital test video from the A/D converter is then sent to a digital peak detector, which outputs a peak value on a control bus to the receiver interface via J2, to be sent ultimately to the HSP for inclusion in built-in-test reports and then sent to the RDASC processor via the PSP.

5-4.8.3.2 Clock Inputs. Clock inputs at J1 are received from the HSP as test monitor timing via the receiver interface. They are used for the digital test data out of the A/D converter and peak detector. The reference voltage for the A/D converter in the RF/IF test monitor is adjusted by R78 to -2.0 $\pm$ 0.003 Vdc. Relay K6 is used to terminate the input to the amplifier limiter during A/D converter DC-offset calibration. Relay K9 enables the detected RF/IF video to be monitored via external BNC test connector UD4J11.

5-4.8.4 Receiver Status Data Interface Function. The interface function (Receiver Interface Assembly UD4A32) receives DIGITAL TEST VIDEO from the RF/IF test monitor at J2, RF FREQ GEN FAULT signals at J7, repeat back data, and clocks from other receiver functions, for input to a multiplexer. The PARALLEL RECEIVER STATUS DATA output from the multiplexer is sent to a parallel-to-serial converter. The status data (in serial form) is clocked out by receiver status data timing signals received at J13 from the HSP. The SERIAL RECEIVER STATUS DATA is output at UD4J22 of the receiver cabinet and sent to the HSP.

## 5-4.9 ON-LINE CALIBRATION AND PERFORMANCE CHECKS.

As part of the Monitor and Calibrate RDA function of the RDA Application Program, seven specific RDA calibrations pertinent to the receiver signal processor are performed on-line to ensure that hardware imperfections are measured and proper compensations made in the computational routines.

In addition, RDA alarms are set when the measured imperfections exceed preset limits (limits are set mostly in adaptation data parameters). The specific checks and calibrations are as follows:

- Linear and Log Channel Reflectivity Calibration
- Reflectivity Calibration Check
- Velocity and Spectrum Width Check
- Clutter Suppression Checks
- DC Offsets and Noise Level
- IF Attenuator Calibration and I&Q Amplitude and Phase Balance
- System Noise Temperature Check

The linear (LIN) data channel is used to produce base data products. Therefore, LIN channel alarms are more meaningful than LOG channel alarms. However, the correlation of LIN channel alarms and their associated LOG channel alarm may be helpful in troubleshooting the receiver subsystem. While subsequent paragraphs may only discuss a particular LIN channel alarm, the discussion also pertains to the associated LOG channel alarm. The alarm limits mentioned in the following paragraphs should be considered representative, since they are adaptive and may be changed through an authorized change request (OSF level of authority, or higher).

Some of the calibrations use test signals with different power levels as inputs. The low power test signals are susceptible to corruption from external noise or interference leaking into the receiver channel through the antenna. If such corruption occurs during a calibration, the appropriate alarm messages will be displayed. These alarm messages will be cleared after subsequent calibrations are run if the external noise or interference has ceased. Occasional display of calibration alarms is not indicative of system degradation. System degradation is indicated by calibration alarms being displayed for an extended period of time. Note that some of the calibrations are performed only once every 8 hours. Any calibration alarms displayed as a result of test signal corruption during one of these 8 hour calibrations will be displayed for 8 hours, until the calibration is run again.

5-4.9.1 Linear and Log Channel Reflectivity Calibration. A reflectivity calibration is performed on the LIN and LOG channels at the beginning of every volume scan. The calibration is performed with four types of test signal inputs, as follows:

- Large RF Drive signal at 44 km range (RFD3)
- Medium RF Drive signal at 78 km range (RFD2)
- Small RF Drive signal at 144 km range (RFD1)
- Continuous Waveform (CW) signal processed at all ranges from 5 to 145 km. CW signals have a 20 dB/decade range weighting factor applied in PSP.

From the results of sampling these signals, an adjustment is made to the reflectivity calibration/constant (SYSCAL). Various alarms are provided if the measurements are different from

expected results by a predetermined (by adaptation data) amount. The sequence of events is as follows:

5-4.9.1.1 RF Drive. For each of the RF DRIVE test signals, the difference between the expected and measured signal amplitude is calculated and compared. The mean (average) of the three differences is also calculated. If any of the three differences are not within 2 dB of the mean, the LIN CHAN RF DRIVE TST SIGNAL DEGRADED alarm is set.

5-4.9.1.2 RF Drive Average. An average of the RF DRIVE differences is calculated. The CW measured signal is compared against the expected result and the CW difference is calculated. This difference should be equal to the RF DRIVE difference average. If the CW difference is not within 2 dB of the RF DRIVE difference, the LIN CHAN TEST SIGNAL DEGRADED alarm is set.

5-4.9.1.3 RF Drive and CW Test Signal. If either alarm is present, the calibration is terminated and the alarm is displayed. If neither the RF DRIVE nor the CW TEST SIGNAL alarms are set, a new SYS CAL is calculated as follows:

$$SYSCAL_{NEW} = SYSCAL_{INITIAL} + AVERAGE_{DIFFERENCE}$$

5-4.9.1.4 SYSCAL. The initial SYSCAL entered as adaptation data is the result of an off-line calibration process. If the $SYSCAL_{NEW}$ should ever differ from the $SYSCAL_{INITIAL}$ by more than an amount set by adaptation data, the LIN CHAN GAIN CAL CONSTANT DEGRADED alarm is set. The initial value of SYSCAL should be updated whenever changes are made to the receiver gain. The receiver gain will change when receiver components in the RF and IF chains are changed, and when the receiver front end (RFE) components are changed. Changing the transmitter pulse width may also affect the gain.

5-4.9.1.5 Alarm Parameters. Parameters associated with alarms are displayed in the alarm field of the RDA Summary Status and are available in RDA Performance Data menus. The CAL # displayed is the difference between the $SYSCAL_{NEW}$ and $SYSCAL_{INITIAL}$. It is displayed as part of the RDA Summary Status.

5-4.9.2 Reflectivity Calibration Check. This function checks the system gain constants obtained by the reflectivity calibration procedure. It is performed every 8 hours using the 10-microsecond delayed klystron output test signals with the waveguide in the dummy load position. Using a 6-radial sequence generated by Doppler microcode, three test targets of different amplitudes are produced, three radials of linear channel data and three radials of log channel data are processed. The reflectivity estimates are computed using the reflectivity calibration values. These are compared to expected target amplitudes. The mean difference between the expected and estimate amplitudes for each channel is computed to determine if it is within limits (as set by adaptation data). If the difference between the measured and expected reflectivity value for any signal level differs from the mean of all three by more than the Klystron Output Target Consistency Degrade Limit in adaptation data, then the LIN/LOG CHAN KLY OUT TEST SIGNAL DEGRADED alarm is set. If the klystron output test signals are not degraded, the magnitude of the mean of the reflectivity difference between expected and measured are compared to the Reflectivity Calibration Check Degrade Limit and Reflectivity Calibration Check Maintenance Limit in adaptation data. If the mean is greater than the degrade limit, then the LIN/LOG CHAN GAIN CAL CHECK DEGRADED alarm is set. If the mean is greater than the maintenance limit, the LIN/LOG CHAN GAIN CAL CHECK MAINT REQD alarm is set.

5-4.9.3 Velocity and Width (Spectrum) Check. In addition to the reflectivity (i.e., amplitude) calibration described in paragraph 5-4.9.2 , the test targets and continuous waveform (CW) signals are caused to vary in phase with respect to time to simulate Doppler shifts on the test target returns. The phase RAMs within the HSP are loaded with data so that when the RAMs are read out and applied to the test signal source (the RF Generator), the following velocities are simulated:

- Zero velocity
- +1/4 VN (N/Yquist Velocity)
- -3/8 VN
- +5/8 VN

The velocities are simulated by stepping the test targets produced by the RF frequency generator in phase. Complete phase rotation of 360 degrees is equivalent to 128 binary counts in a phase shift register. Between successive discrete phase shifts, a +4 count followed by a -4 count "dither" simulating a constant spectrum width is added. The PSP algorithm produces an average known velocity and spectrum width from calculations performed on the test targets. If the velocity or spectrum width is more than one meter per second from the expected value, the VELOCITY/WIDTH CHECK DEGRADED alarm is set. If more than 1/2 meter per second, the VELOCITY/WIDTH CHECK MAINT INDICATED alarm is set.

5-4.9.4 Clutter Suppression Check. The clutter suppression check is performed once every eight hours with the transmitter output switched to the dummy load. The klystron sample is delayed 10 microseconds and fed into the receiver, as it is for the reflectivity calibration check. The check is accomplished in a four radial sequence as follows:

- Radial 1 clutter filter is initialized
- Radial 2 filter setting
- Radial 3 bypass mode is selected; unfiltered power is measured
- Radial 4 clutter filter mode is selected, the same power is measured with clutter filtering

If the filtering effect is insufficient, an alarm will be set as follows:

- LIN CHAN CLUTTER REJECT DEGRADED.
  Filtering is less than 35 dB (an adaptation parameter) or obvious bad data is produced.
- LIN CHAN CLTR REJECT MAINT INDK.
  Filtering is less than 40 dB (an adaptation data parameter).

At present, LOG channel alarms are inhibited by setting the adaptation data parameters so that the alarms will not occur.

5-4.9.5 DC Offset and Noise Calibration. This function computes offset correction factors for the linear channel A/D converter and receiver-noise levels for both the linear and log data channels.

This is done once every scan sequence with the transmitter and test-signal generator disabled. A 2-radial sequence is generated by PSP macrocode. The measured average offset and power levels at the linear channel A/D converter outputs and the previous bias correction factors are used to compute a new offset correction factor. This procedure is repeated until the offset correction factor is less than the A/D LSB. The calibration sequence is run one more time with the measured average power level used to compute the receiver noise power for the LOG/LIN channels. If the noise level is out of range (determined by adaptation data), then the following alarms are displayed:

I CHAN BIAS OUT OF LIMIT
Q CHAN BIAS OUT OF LIMIT
LOG CHAN NOISE LEVEL DEGRADED
LIN CHAN NOISE LEVEL DEGRADED

5-4.9.6 IF Attenuator Calibration and I&Q Amplitude and Phase Balance. This function computes amplitude and phase correction factors for the IF attenuator and is performed once every volume scan. The transmitter is disabled and a CW test signal is injected into the receiver for each range bin. An eight-radial sequence is generated using AGC calibration macrocode where the IF attenuator is stepped through its 40 attenuation positions. Data is collected on each of the eight radials, and the amplitude and phase characteristics of each attenuator setting are placed into a matrix to compute the correction factors for the amplitude and phase imbalances. In order to cover the 40 attenuation positions, it is necessary to inject the test signal into the receiver cabinet for five of the radials and into the low noise amplifier for three of the radials. If the wrong injection point is detected, or if the attenuator setting is more than 5 dB, the AGC CALIBRATION SIGNAL DEGRADED alarm is displayed. The tolerance value of 5 dB for the AGC CALIBRATION SIGNAL DEGRADED alarm is set by receiver adaptation data parameter R231 (TOLERANCE FOR AGC CALIBRATION SIGNALS). If improper data is received, the IF ATTEN CAL INHIBITED - INVALID DATA alarm is displayed and the calibration is aborted for that scan. As the attenuator is stepped through its 40 positions, the difference between any two steps should be 1.5 dB. If the actual attenuation of any of the steps is different than the nominal value by more than 1.0 dB, the IF ATTEN STEP SIZE MAINT REQUIRED alarm is set. If the actual attenuation of any of the steps is different from the nominal value by more than 1.5 dB, the IF ATTEN STEP SIZE DEGRADED alarm is set. The tolerance value of 1.0 dB is established by receiver adaptation data parameter R233 (IF ATTENUATOR STEP MAINT REQUIRED TOLERANCE) and the value of 1.5 dB is established by R232 (IF ATTENUATOR STEP DEGRADED TOLERANCE).

5-4.9.6.1 I/Q Phase Detector. In addition to the above described calibration of the IF attenuator, the I/Q phase detector is calibrated. The amplitude outputs of the phase detector are dependent on the phase relationship between the CW test input and the COHO reference. The I (in-phase) output and the Q (quadrature) output are averaged so that as the phase of the CW test signal with respect to the COHO reference is continuously advanced, both the I and Q output amplitudes describe sine waves which have a 90 degree phase relationship with respect to each other as shown in Figure 5-4, I/Q Phase Detector Output. The I max output and the Q max output should, of course, be equal. If they are not within 6% of each other, the I/Q AMP BAL DEGRADED alarm is displayed. If they are within 3% and 6% of each other, the I/Q AMP BAL MAINT INDIC alarm is displayed. If the zero crossing of the above I and Q output waveforms indicates a phase unbalance of more than 0.14 radial (8 degrees), the I/Q PHASE BALANCE DEGRADED alarm is displayed. If the phase

unbalance is between 0.09 and 0.14 radial (5 and 8 degrees), the I/Q PHASE BALANCE-MAINT REQUIRED alarm is displayed.

5-4.9.7 System Noise Temperatures. This function computes the noise temperature of the system and checks the operation of the interference suppression function. This is done once every volume scan with the transmitter disabled. A three-radial sequence is generated by PSP macrocode. The average power level is measured for two radials, one without a test signal and another with a noise test signal. Using the excess noise ratio of the noise source and the ratio of the two measured power levels, the system noise temperature is computed. The third radial is run with the noise source on and the ISU enabled. A count of interference events during the radial is entered into the hardware status data. If the channel noise is less than or equal to zero, or if the system noise temp is greater than limits set by adaptation data, the following alarms are initiated.

5-4.9.7.1 Channel Noise Degraded. For channel noise less than or equal to zero, (indicating incorrect data), SYSTEM NOISE TEMP DEGRADED alarm is displayed and the check is aborted for that volume scan.

5-4.9.7.2 System Noise Temp - Maint Required. A correct system noise temp is approximately 500 degrees K. When the noise temp is between 600 degrees K and 700 degrees K (adaptation data), a SYSTEM NOISE TEMP - MAINT REQUIRED alarm is displayed.

5-4.9.7.3 System Noise Temp Degraded. For a system noise temp greater than 700 degrees K, a SYSTEM NOISE TEMP DEGRADED alarm is displayed.

5-4.9.7.4 ISU Performance Degraded. If 10 or more counts of interference are detected during the ISU test radial, the ISU PERFORMANCE DEGRADED alarm is displayed.

## 5-4.10 OFF-LINE FAULT ISOLATION DIAGNOSTIC.

The off-line receiver diagnostics are described in the RDASOT User's Guide, NWS EHB 6-510-2, paragraph 2.2.2.6. The diagnostic subtest 1 checks the power supplies involved, then checks the ability of the D-signal Processor to process the results of making the diagnostic tests. The remaining subtests at various points in the receiver channel are referred to as "TEST SAMPLE" in Figure FO5-5 through Figure FO5-9. The test stimulate (i.e., CW RF pulses, or noise) for these tests are detailed in Figure FO5-8. Processing the results of these samples is detailed in Figure FO5-9. In addition to the programmed routines of the receiver diagnostic tests described in NWS EHB 6-510-2, paragraph 2.2.2.6, provision is made in the RDASOT for manual control and display of the BIT circuitry described in Figure FO5-8 and Figure FO5-9. This capability is described in paragraph 2.2.4.2 of NWS EHB 6-510-2. The capability of both receiver diagnostics and control receiver/signal processor functions are utilized extensively in isolating faults within the receiver function, as detailed in the Primary and Secondary Fault Isolation, Sections 6-3 and 6-4 .

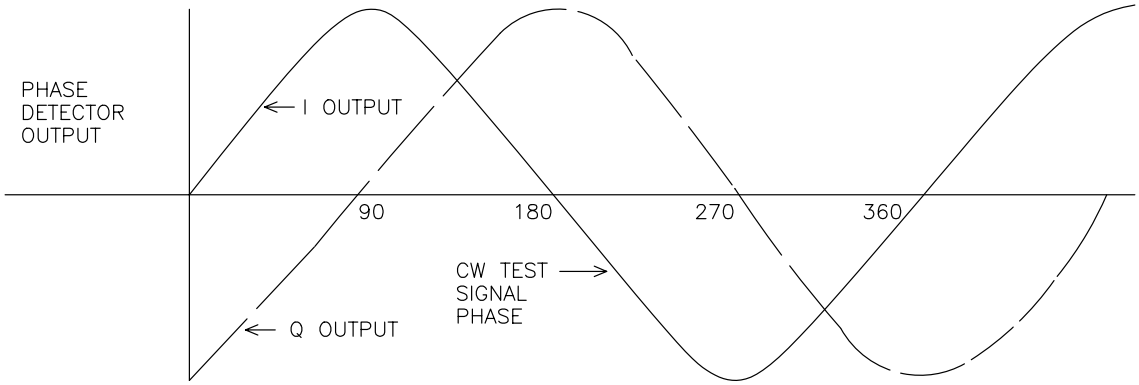


NX1841

Figure 5-4. I/Q Phase Detector Output

# Section 5-5. HSP Functional Block Diagram Description

## 5-5.1 INTRODUCTION.

The WSR-88D signal-processing function converts I, Q, and log video derived from the received RF into base data products of reflectivity, velocity and spectrum width. During the transformation, function enhances weather related elements of the input data while discriminating against non-weather related elements. One of the processing techniques used to reject ground clutter at low elevation scans is notch filtering of elements with very low velocities, such as water tower echoes, echoes from trees, etc. The notchwidth filter is a series of components which produce ripple behavior in both passband and stopband with the range WS<W. Notchwidth filters allow for three operator-selected notchwidth settings (narrow, medium, and high). The filter used is a multiple pole digital filter with selectable bandwidth. Because of the computational complexity involved, the filtering is performed in hardware rather than software. This and other practical considerations has resulted in a signal processor split between a HSP and a PSP step. This section describes the HSP.

These functions are discussed in paragraphs 5-5.2 through 5-6, respectively. See Figure FO5-10.

**NOTE**

This section refers to the RDADP as UD5, the Receiver as UD4, the Transmitter as UD3, and the Waveguide Pressurization Unit as UD6. Unless otherwise specified, the information also applies to redundant systems UD105, UD104, UD103, and UD106.

## 5-5.2 HSP/PSP RELATIONSHIPS.

The HSP functions in conjunction with the PSP. Both are housed in the RDADP Cabinet UD5, and are discussed below.

5-5.2.1 Video Signal Prescaling Processing. The HSP provides video signal prescaling, clutter filtering, and system synchronization. Although the HSP stores clutter-map data for complete radials, the HSP processes and outputs the time-series echo data on a cell-by-cell (range) basis. Each cell processed by the PSP receives time-series digital data from the HSP and develops the echo power, reflectivity, velocity, and spectrum width arrays. These arrays are sent to the RDASC processor where data base formatting is performed. Strong point clutter censoring and range unfolding are performed in the PSP. Velocity dealiasing is performed in the RPG.

5-5.2.2 Time-Series Data. The PSP Input Signal Conditioner (ISC) receives H degree radial signals from control interface A of the HSP and outputs the power summed arrays to the RDASC. H degree radial signals are single-pulse time-series video data. Upon system initialization, the PSP receives the microcode processing instruction routine from the RDASC, via a download process, and stores it in RAM. The microcode provides the detailed instructions for all array processing routines. The PSP also receives a macrocode command instruction set, which is used to control waveform processing mode selection, including synchronization and timing command sequences. The command macrocode is downloaded for each radial and is stored in the ACU RAM. The PSP also

receives clutter-map data on a radial-by-radial basis, which it sends to the HSP for clutter suppression processing. A detailed description of the PSP is in Section 5-6 .

5-5.2.3 Raw Data. The HSP receives the raw data from the receiver, processes it, and outputs it to the PSP. The HSP provides prescaling of digital data, filtering of clutter, synchronizing of the WSR-88D system, and interfacing of the HSP and the rest of the system. The HSP accepts the I, Q, and log video (serial data) signals, interference tag, and AGC position data from the receiver. The prescaler accepts the data from the receiver and scales the data to achieve overall linearity. The purpose of linearization is the reduction of reflectivity bias errors, especially when clutter filtering is selected. The HSP then takes the I and Q video data from the prescaler and processes it in such a way that ground clutter is filtered out. During the filtering, signals from the synchronizer and control interface are sent to the filter to provide timing and command words for processing. This filtering process is implemented in order to convert raw, cluttered data into valid base data. The valid base data is sent to the PSP Input-Output Controller (IOC).

Finally, the HSP provides the following operations:

5-5.2.3.1 Synchronizer. The synchronizer circuit is the master timing generator for the transmitter, receiver, RDADP, the storage area for the RDASC processor words, and timing check word latches for fault localization. The synchronizer also provides a circuit to protect the receiver from high voltage transmitter pulse. It sends status flags to the PSP IOC.

5-5.2.3.2 Control Interface. The control interface (CI) circuits provide a link between the receiver and rest of the system. They send controls to the receiver, clutter filter, A/D converter, synchronizer, prescaler, and clutter map for timing and control. The PSP IOC receives timing and commands, BFR (buffered) WRITE DATA and ADDRESSES, and INPUT DATA (receiver/HSP Status) from the control interface circuits.

## 5-5.3 HSP OVERVIEW.

The HSP performs the following functions:

- Video Prescaling of I, Q, and log data to achieve overall linearity.
- Ground clutter suppression to reduce ground clutter when required to obtain valid base data. The HSP was designed to allow for the simultaneous processing of surveillance and Doppler data via two clutter filter channels (Channels 1 and 2). Since surveillance and Doppler data are not time concurrent, only Channel 2 is implemented and processes the surveillance and Doppler data on a time share basis.
- Synchronization and control of transmitter, receiver, and signal processor and control interface with the programmable signal processor.

5-5.3.1 Prescaling. The video prescaling function (Figure FO5-10, sheet 1) consists of the following:

- Test/Norm Video Select MUX to select either receiver inputs or test inputs
- Phase/Gain Compensation Mult/Accum for scaling of I and Q inputs

- AGC Comp Factor Memory (Dest 9) to store separate compensation factors for each AGC attenuator step
- I/Q Data Selection MUX and Fixed to Floating Point Conversion logic
- Log/Linear Select MUX and CH (channel) 2 PS Output Rgtr to select linear or linearized log data for output to the clutter filters
- Log to Linear Floating Point Converter
- Serial-to-Parallel Conversion of I and Q inputs

The video prescaling function provides for selection of either receiver data or off-line diagnostic test inputs from the RCVR and HSP Test Data Generation function. In either case, the input data consists of the following:

- I (in-phase) 12-bit data on serial bus
- Q (quadrature) 12-bit data on serial bus
- Log 12-bit data on serial bus
- Serial-to-Parallel conversion of I and Q inputs
- AGC (automatic gain control) Position (6 bits)

The RDASC processor controls selection of receiver or test data.

5-5.3.1.1 Complex Data (I, Q). The complex data (I,Q) is scaled and converted to floating point format in a manner which compensates for the AGC attenuation applied in the receiver and for amplitude and phase imbalance in the I and Q channels. The scaling compensates for the measured amplitude gain and phase insertion characteristics of the AGC attenuator and measured I and Q imbalance. The scale factors are determined by an on-line calibration procedure and downloaded from the RDASC processor into the AGC Comp Factor Memory. Separate AGC calibration factors are stored for each AGC attenuator step. The AGC controller, located in the receiver, sends 6-bit AGC position data to the prescaler on every range bin indicating what the commanded attenuation was. The AGC position data selects the AGC calibration factors to be employed. The scaling is implemented by the Phase/Gain Compensation Mult/Accum circuit.

5-5.3.1.2 Log Data. The log data inputs are linearized and converted to floating point format via a PROM look-up table in the Log to Linear Floating Point Converter circuit. This processing provides the equivalent of a wide dynamic range linear detector.

5-5.3.1.3 Clutter Filter. The output (CH 2 DATA) to Clutter Filter UD5A10A8 is selected by the RDASC processor to be either floating point I and Q data or linearized floating point log data.

**NOTE**

Clutter Filter Circuit Assemblies UD5A10A7/A8/A9/A10 are identical. Channel and filter numbers are determined by card location; slots A9 and A10 may not be used depending upon configuration.

5-5.3.2 Ground Clutter Suppression. The purpose of the ground clutter suppression function is to filter ground clutter in those areas where ground clutter would otherwise degrade base data while minimizing bias errors in base data due to ground clutter filtering. Ground clutter is a problem on low elevation cuts.

The digitized serial I and Q video data are separated and scaled utilizing the AGC position signal in the video prescaler. The I and Q signals are then routed to separate clutter filters. The purpose of the clutter filter is to discriminate against motionless returns on the assumption that the desirable returns from clouds will never be perfectly stationary, while unwanted returns from ground clutter (i.e., hills, water towers, houses, etc.) will be stationary. The clutter filters are actually multi-pole high pass filters with a very narrow reject band near zero Doppler velocity. The filters are implemented in hardware so that the filtering may be accomplished in the minimum real time.

5-5.3.2.1 Ground Clutter Suppression Function. The ground clutter suppression function (Figure FO5-10, sheet 2) consists of the following:

- Clutter Filtering
- Filter Output Combiner
- Clutter Map

Each of the two clutter filters is a combed filter operating on each 250m range bin independently. For each range bin, the input time series consists of samples occurring at the pulse repetition frequency (PRF) rate. The functions performed by the filter are listed below:

- Provides high pass filter data
- Provides bypass path
- Provides interference suppression
- Provides filter initialization

Some of these functions are dependent on the following waveform types: contiguous (surveillance), batch (surveillance followed by Doppler), and staggered pair. (The hardware supports staggered pair, but it is not implemented in the present system.)

For contiguous waveforms, a fifth-order elliptic (harmonic) filter is provided. This filter produces a sharp cut-off which is necessary for waveforms that are nearly contiguous.

For batch processing (surveillance waveforms and the Doppler pulsed), a fifth-order elliptic filter is provided. The surveillance pulses are of insufficient number to be filtered in an elliptic filter. Instead, surveillance linearized log data is filtered by a two pulse canceller.

For staggered pair waveforms, the clutter filter RAM range bin address will be reset to zero at the start of the long (or short) interpulse period, but not with both. As a result, the echos from the long and short interpulse periods will be stacked end-to-end in memory and will, therefore, be filtered independently.

5-5.3.2.2 Clutter Filter Each clutter filter provides a bypass path which has the same time delay as the filter and no effect on filter operation. The bypass path is provided so that clutter filtering can

be restricted to known ground clutter. The filter output is selected to be either the high pass filter output from filter C, circuit card assembly location A8, or the bypass output from filter B, circuit card assembly location A7, dependent on controls from the clutter maps.

5-5.3.2.3 RDASC Processor. When the RDASC processor enables interference suppression, and the interference detection tag from the prescaler is set, the clutter filter performs the following operations:

5-5.3.2.3.1 Clutter filter memories are not updated. This prevents contamination of the memories with interference, thus minimizing transients due to interference.

5-5.3.2.3.2 The filter assembly output is zeroed out. This occurs whether or not bypass is selected. These operations take precedence over filter initialization.

The purpose of filter initialization is to reduce the settling time of the filter at the start-up of elevation cuts, at changes in PRT, or at changes in notch widths. Note that the transients occur as a function of azimuth, not range. The transient problem relates to second, third, etc., trips (numerous returns from targets along the same azimuth). Filter initialization is controlled as follows:

- Initialize on the next radial upon RDASC processor command.
- For batch waveforms, the filter is initialized automatically at the start of each block of Doppler pulses and surveillance pulses. A block of Doppler pulses and surveillance waveforms consist of ten radials.

The fifth-order elliptic (harmonic) filter is initialized on the first two pulses of the radial (or Doppler pulses of batch waveform). On each pulse, the initialization consists of storing values in the filter memories such that DC clutter will be canceled, assuming the pulse is a sample of the DC clutter. Initialization is done twice to improve performance in the presence of pulsed interference.

5-5.3.2.4 Filter Output Combiner. The filter output combiner provides an interface between the clutter filters and the programmable signal processor and also plays a role in interference suppression. The output combiner provides a 36-bit wide data bus to the programmable signal processor. The data bus is subdivided into two 18-bit fields (6-bit exponent, 12-bits significant) for I and Q data. When the interference detection tag to the output combiner is set, the output combiner performs the following operations:

5-5.3.2.4.1 Operation 1. Interference repeat enable not set: Filter data is not affected by the output combiner. This means the data will be zero since it was zeroed out in the clutter filter. It minimizes bias errors in the velocity estimates due to interference suppression.

5-5.3.2.4.2 Operation 2. Interference repeat enable set: Filter data is repeated from the previous range bin. This occurs for as many range bins as the duration of interference detection tag. Thus, the data passed to the PSP in place of the interference pulse is from the most recent range bin having valid data. It minimizes reflectivity bias errors due to interference suppression.

5-5.3.2.5 Clutter Maps. Clutter maps for at least the two lowest elevation cuts reside in the RDASC processor. The purpose of the clutter maps is to select clutter filtering where needed and to control the passband edge velocity (also called notch width). The use of properly defined clutter

maps maximizes the ability of the system to acquire base data with acceptable bias error due to the clutter filtering.

5-5.3.2.6 Passband Edge Velocity. The passband edge velocity (notch width) required to achieve a specified amount of clutter suppression depends primarily on the clutter spectrum width. The clutter spectrum width depends primarily on antenna azimuth scan rate. Wind velocity and type of terrain are also known to be factors affecting clutter spectrum width. Since antenna scan rate and wind velocity are global in character, a low resolution notch width map is adequate. The clutter spectrum width/antenna azimuth scan rate relationship is such that clutter filter notch widths are larger for faster rotations, Doppler waveforms, and shorter ranges.

5-5.3.2.7 Ground Clutter Reflectivity. Ground clutter reflectivity can be characterized as spiky, i.e., large variations from one radar resolution cell to the next. A high resolution bypass map minimizes loss of base data due to selection of clutter filtering. Clutter filter circuit cards A7 and A8 accept I/Q/log data via the prescaler (A6) and notch width data via CIC (A5). The coefficient PROMs on A7 and A8 receive coefficient (COEF) data. This data is used by the multiplexers and exponent address to eliminate the ground clutter.

5-5.3.2.8 Clutter Map Circuit. The Filter Output/Clutter Map 5A10A2 circuit provides independent control of the notch widths of the two clutter filters and a common control of filter bypass selection. The clutter map consists of the following:

- A radial notch width/bypass map ping-pong memory of sufficient size to store one radial of notch width and bypass data in each half of the memory. The ping-pong memory consists of two banks of memory which allow data to be read from one bank while the other bank is used for write data into the other.
- Parallel-to-serial logic to convert the 16-bit bypass words from parallel-to-serial format.
- A notch width register file to store notch width scale factors.
- Notch width normalization PROM (programmable read only memory) to convert notch widths in meters per second to notch widths relative to the Nyquist velocity. Refer to Notch Width Norm Prom Manual, Document Number 7337677-000.
- Bypass command logic to interpret the operator control bits.

The RDASC processor transmits the clutter map data to the clutter map one radial at a time. It is written into one-half of the ping-pong memory for the next radial while the other half is read for control of the current radial.

5-5.3.2.9 Batch Mode. In the batch mode, surveillance pulses are filtered by a two-pulse canceller. The bypass map controls bypass of the two-pulse canceller. The notch width map has no effect on the two-pulse canceller since a two-pulse canceller has a fixed frequency response. The gain of the two-pulse canceller is controlled by a single word from the RDASC processor.

5-5.3.3 Synchronization. The synchronizer provides computer-controlled range counters and range decoding logic to generate timing triggers, clocks, and gates for the transmitter, receiver,

signal processor, and receiver test panel. It also provides computer-controlled radial sequencer counters and decoding logic to control radial timing and generate radial clocks.

5-5.4 HSP PROCESSING.

This paragraph contains the HSP processing functional descriptions of the HSP functional areas as detailed on Figure FO5-10, sheets 1 through 8. These functional areas are listed as follows:

- Video Prescaling
- Ground Clutter Suppression
- Timing and Control
- Transmitter, Receiver, and HSP Synchronization
- Receiver and HSP Test Data Generation
- Receiver Control Data Generation
- Interference Tag Processing
- HSP and Receiver Status Data Collection

Table 5-8 correlates HSP functions with LRUs.

5-5.4.1 Destination Files. Destination files in the PSP IOC distribute the control addressing and write data to various destinations in the HSP. The HSP destinations, destination code assignments, and words are briefly described as follows:

5-5.4.1.1 Destination 7. Destination 7 inputs to the HSP are stored in the HSP input registers (Figure FO5-10, sheet 3, zone 10B) and consist of words that allow proper control and operation of most of the HSP functions. Table 5-9 details the Destination 7 inputs.

5-5.4.1.2 Destination 8. Destination 8 inputs to the HSP consist of 32 16-bit filter notch width words which go to the clutter map memory circuits (Figure FO5-10, sheet 2, zone 9A). The clutter map memory consists of dual RAMs, one of which is available to the RDASC processor for writing and the other which is read by the hardware. Clutter map data may be written on any radial of an elevation layer and prior to elevation layer start. Any change to destination 8 causes clutter suppression to drop about 30 dB on the first radial, following the change with recovery to full suppression after several radials.

5-5.4.1.3 Destination 9. Destination 9 inputs to the HSP are to the AGC Compensation Factor Memory (Figure FO5-10, sheet 1, zone 4A) and consist of 216 16-bit words which define the AGC compensation factors employed by the prescaler for each AGC position command.

5-5.4.1.4 Destination 10. Destination 10 inputs to the HSP consist of a maximum of 4096 16-bit words which go to the phase control RAM. Each 16-bit word is a phase shift command which controls the phase shifter located in the receiver RF frequency generator, thereby controlling the phase of STALO (stable local oscillator), RF drive pulse, klystron output, and COHO (coherent oscillator) when phase shifted COHO is selected.

5-5.4.1.5 Destination 11. Destination 11 and Destination 12 (1100) inputs to the HSP are to the Test Generator Memory (Figure FO5-10, sheet 6, zone 6B). The test generator memory is loaded with test data from the RDASC processor prior to testing. The test data in the RAM may be read and substituted for normal receiver data as input to the A/D converter or prescaler for testing during the performance of off-line diagnostic tests (RDASOT). Bit 15 of all words is an even parity list. The HSP will set a parity alarm bit on read if there is a parity error.

5-5.4.1.6 Destination 13. Destination 13 inputs to the HSP consists of 32 16-bit words which are stored in clutter map memory as bypass map data. Each bit applies to a one-Km range interval. A high state of a bit selects filter B and filter C bypass channels and a low state selects the filter outputs. The bypass map may be changed on any radial with no effect on clutter filter operation.

5-5.4.2 Control Interface (CI). The CI circuits (A, B, and C) are located in the HSP and provide the interface between the PSP IOC and the HSP as well as providing numerous control functions. Control interface operations are discussed in subsequent paragraphs of the HSP.

5-5.4.3 Video Prescaling. The Video Prescaler UD5A10A6 (Figure FO5-10, sheet 1) accepts the I, Q, and log serial video from the receiver A/D converter at a 9.6 MHz rate. The serial video is one input to the test/norm video select multiplexer (Mux). The other input to the multiplexer is the serial test video that is output from the Receiver and HSP Test Data Generation function (P/O CIB) on Figure FO5-10, sheet 6. The test data is generated as a result of the Destination 11 input and control interface write data (CI WR DATA) from the PSP through CIA (Figure FO5-10, sheet 3) to Test Generator Memory circuits (sheet 6).

5-5.4.3.1 PS Test Select Signal. The PS (Prescaler) TEST SELECT signal is also sent from the Receiver and HSP Test Data Generation function to the test/norm video select multiplexer (Figure FO5-10, sheet 1) to select either the received serial video or the test serial video. When test data is selected, it replaces the normal data applied to the prescaler test/norm video select multiplexer as well as to the interference tag-test/norm select MUX (Figure FO5-10, sheet 7). The video output of the test/norm video select multiplexer is sent to the I/Q and log serial-to-parallel conversion and resync register circuits which are clocked by a 0.6 MHz PH (phase) Ø clock from the clock resync and buffer circuits and the LOG and LIN serial and resync clocks selected by the test/norm clock select Mux and resync register. The I or Q parallel data are selected and converted from fixed to floating point format and clocked by a 1.2 MHz PH 4 clock.

5-5.4.3.2 I or Q Significant Signal. The I or Q significant (mantissa) signal output of the I/Q data selection MUX and fixed to floating point conversion circuit is sent to the phase/gain compensation multiplier/accumulator and the I or Q exponent signal is sent to the exponent adder. Parallel log data is sent to the log to linear floating point converter, where it is converted to floating point format via a PROM look-up table. The purpose of the linearity is to reduce the reflectivity bias errors, especially when clutter filtering is selected. The log data is then sent to the input of the log/linear select multiplexer and CH2 PS (prescaler) output register circuits.

5-5.4.3.3 AGC Position Data. The AGC POSITION DATA (attenuation factors) generated by the receiver's AGC controller (IF compression circuits) are input into the prescaler at the normal/test AGC position and AGC compensation factor write address selection circuits. TEST AGC POSITION DATA from the AGC and interference test data output register (P/O CIB) in the Receiver and HSP Test Data Generation function (Figure FO5-10, sheet 6) are also inputed to the

prescaler AGC position selection circuits. These circuits also receive the AGC COMP FACT SEL A & B signals from the Receiver and HSP Test Generation function (Figure FO5-10, sheet 6) and the Destination 9 CI WR ADRS from the HSP Timing and Control function (Figure FO5-10, sheet 3). The data is clocked by a 1.2 MHz PH Ø clock. The output of the AGC selection circuits address the AGC compensation factor memory circuits which contain the CI WR DATA for a read or write operation. The data (CI WR DATA) in the AGC compensation factor memory circuit was received from the PSP via CIA in the HSP Timing and Control function (sheet 3).

5-5.4.3.4 AGC Selection Circuits. AGC position data from the AGC selection circuits are also sent to the AGC position register which is clocked by a .6 MHz PH Ø clock and sent to the exponent adder.

5-5.4.3.5 AGC Compensation Factor Memory Circuits. In addition to the addresses and data, the AGC compensation factor memory circuit receives the AGC COMP FACTOR MEMORY WRITE CTRL and PS OUTPUT DATA GATE signals generated by the destination data block write control signal generator on CIA of the HSP Timing and Control function (Figure FO5-10, sheet 3). The AGC compensation factor memory circuit outputs the AGC COMP FACTOR signal (correction for AGC attenuator errors) that was stored in the RAM as scale factors to the phase/gain compensation multiplier/accumulator.

5-5.4.3.6 AGC Comp Factor Signals. The AGC COMP FACTOR signals (scale factors) are multiplied together with the serial video (SIGNIFICANT) input to the multiplier/accumulator, which has the net effect of amplifying the video by the same amount that it was attenuated for each range bin. The AGC position data is added to the exponent in the exponent adder in order to adjust for the downscaling of the video signal. The processed data from the multiplier/accumulator and the exponent adder is sent to the Log/Linear Select Mux and CH 2 PS Output Register.

5-5.4.3.7 Log/Linear Select Mux and CH 2 PS Output Register. The log/linear select Mux and CH 2 PS output register selects either log data or, I or Q Lin data and outputs it (as CH 2 DATA) to the clutter filter (Figure FO5-10, sheet 2) for clutter suppression or to the Archive I CH 2 data latch and parallel-to-serial converter on CIC card in the HSP and Receiver Status Data Collection Function (Figure FO5-10, sheet 8). The MONITORED CH 2 PS DATA output is sent to the monitored prescaler CH2 output data test register in the HSP and Receiver Status Data Collection function (Figure FO5-10, sheet 8).

5-5.4.4 Ground Clutter Suppression. Clutter may be defined as Doppler radar returns which are produced from stationary features of the environment apart from weather. Mountains, forests, buildings, telephone poles, cars, planes, etc. are examples of targets which produce clutter returns. At low elevation angles, the ground itself will produce clutter returns which appear as areas of high reflectivity in the vicinity of the radar. Clutter suppression, or filtering, is the process of selectively suppressing those components of the radar return assumed to be associated with clutter, before spectral moment (base data) computations are performed. Clutter filtering is performed by the HSP in the RDA signal processing system, under the control of the RDA status and control (RDASC) program. The RDASC utilizes a set of azimuth and range specific control maps to configure the clutter filters on a radial-by-radial basis. The control maps are built and modified by the RDASOT, RDASC, and RPG programs from data contained in RDA adaptation data and from MSCF operator inputs.

5-5.4.4.1 Clutter Filtering. Clutter filter processing is based on the assumption that the power spectrum density (PSD) of the radar returns from clutter is distinct from the PSD of returns from weather. The effect of clutter filtering on the PSD of the radar return is shown in Figure 5-5. At the top of the figure, the PSD of the raw radar return is shown. Those components associated with weather are offset from Ø because weather systems are in motion. Superposition is applied by mathematical methods to sum up the combined unfiltered or ideally filtered returns. The transfer function is the ratio of power output to power input at Ø or under ideal conditions.

**NOTE**

The frequency shift of the radar return is directly proportional to the radial velocity of the object generating the return.

As shown at the bottom of Figure 5-5, when the radar return is subjected to clutter filtering those components of the PSD which fall within the filter notch are selectively suppressed, while components falling outside the notch are passed through the filter unattenuated. The filter notch width determines the range of PSD input components which are suppressed.

Table 5-8. HSP LRU versus Functionality Matrix

| LRU / Function | A1 Control Interface A | A2 Clutter Map/ Filter Output | A3 Control Interface B | A4 Synchronizer | A5 Control Interface C | A6 Prescaler | A7 Clutter Filter | A8 Clutter Filter |
|---|---|---|---|---|---|---|---|---|
| Video Prescaling | | | | | | X | | |
| Ground Clutter Suppression | | X | | | X | | X | X |
| Timing and Control | X | | X | | X | | X | |
| Receiver, Transmitter, and HSP Synchronization | | | | X | X | | | |
| Receiver Control Data Generation | X | | | | | | | |
| Receiver and HSP Test Data Generation | | | X | | X | | | |
| Interference Tag Processing | | | X | | | X | X | X |
| HSP and Receiver Status Data Collection | | X | X | X | X | X | X | X |

Table 5-9. Destination 7 Input Word to Receiver/HSP

| WORD # | BIT 15 | BIT 14 | BIT 13 | BIT 12 | BIT 11 | BIT 10 | BIT 9 | BIT 8 | BIT 7 | BIT 6 | BIT 5 | BIT 4 | BIT 3 | BIT 2 | BIT 1 | BIT 0 | FINAL DESTINATION |
|---|---|---|---|---|---|---|---|---|---|---|---|---|---|---|---|---|---|
| 0 | A/D I BIAS DATA | | | | | | | | | | | | | | | | A/D CONVERTER |
| 1 | A/D Q BIAS DATA | | | | | | | | | | | | | | | | A/D CONVERTER |
| 2 | A/D LOG BIAS DATA | | | | | | | | | | | | | | | | A/D CONVERTER |
| 3 | (H) FORCE BYPASS OF ONE CHANNEL | 2 PULSE CANCELLOR GAIN | | | | | | | (H) 2 CHANNEL OPERA-TION | SWEEP IN PROG PRO-GRAMMED | TEST TARGET ON | FORCE FILTER BYPASS | LOG VIDEO DELAY IN | CH2 LOG VIDEO SELECT | INTER-FERENCE SUPPR EN | FDX AGC COMP FACTOR | MISC |
| 4 | CH 1 INT REPEAT | NOTCH WIDTH 1 SCALE FACTOR | | | | | | | CH 2 INT REPEAT | NOTCH WIDTH 2 SCALE FACTOR | | | | | | | CLUTTER MAP |
| 5 | NOT SAVED - MAKE 0 | | | | | | | | | | | | | | | | |
| 6 | HALT SYN-CHRONIZ-ER | GEN MOD TRIG | GEN RF DRIVE TRIG | WAVEFORM MODE | | | MOD PULSE WIDTH LONG | RF DRIVE WIDTH LONG | LOG CLOCK PHASE | | | | LIN CLOCK PHASE | | | | SYNCHRONIZER/ CONTROL INTERFACE |
| 7 | PRT 2 COUNT | | | | | | PRT 1 COUNT | | | | | | | | | | SYNCHRONIZER/ CONTROL INTERFACE |
| 8 | PRT 1 LENGTH | | | | | | | | | | | | | | | | SYNCHRONIZER/ CONTROL INTERFACE |
| 9 | PRT 2 LENGTH | | | | | | | | | | | | | | | | SYNCHRONIZER/ CONTROL INTERFACE |
| 10 | PRT 1 RF PULSE RANGE | | | | | | | | | | | | | | | | SYNCHRONIZER/ CONTROL INTERFACE |
| 11 | PRT 2 RF PULSE RANGE | | | | | | | | | | | | | | | | SYNCHRONIZER/ CONTROL INTERFACE |
| 12 | PRT 1 TRIGGER CHARGE TRIGGER | | | | | | | | | | | | | | | | SYNCHRONIZER/ CONTROL INTERFACE |
| 13 | PRT 2 TRIGGER CHARGE TRIGGER | | | | | | | | | | | | | | | | SYNCHRONIZER/ CONTROL INTERFACE |
| 14 | PRT 1 MOD CHARGE TRIGGER | | | | | | | | | | | | | | | | SYNCHRONIZER/ CONTROL INTERFACE |
| 15 | PRT 2 MOD CHARGE TRIGGER | | | | | | | | | | | | | | | | SYNCHRONIZER/ CONTROL INTERFACE |
| 16 | PRT 1 FILAMENT RESET | | | | | | | | | | | | | | | | SYNCHRONIZER/ CONTROL INTERFACE |
| 17 | PRT 2 FILAMENT RESET | | | | | | | | | | | | | | | | SYNCHRONIZER/ CONTROL INTERFACE |
| 18 | SWEEP IN PROGRESS PROGRAMMED SET | | | | | | | | | | | | | | | | SYNCHRONIZER/ CONTROL INTERFACE |
| 19 | SWEEP IN PROGRESS PROGRAMMED RESET | | | | | | | | | | | | | | | | SYNCHRONIZER/ CONTROL INTERFACE |
| 20 | AU WRAP AROUND RANGE 1 | | | | | | | | | | | | | | | | SYNCHRONIZER/ CONTROL INTERFACE |
| 21 | AU WRAP AROUND RANGE 2 | | | | | | | | | | | | | | | | SYNCHRONIZER/ CONTROL INTERFACE |
| 22 | AU WRAP AROUND RANGE 3 | | | | | | | | | | | | | | | | SYNCHRONIZER/ CONTROL INTERFACE |
| 23 | PRI 1 RANGE DATA | | | NOT SAVED - MAKE 0 | | | | | | | | | | | | | SYNCHRONIZER/ CONTROL INTERFACE |
| 24 | SNAP RANGE COUNT | | | | | | | | | | | | | | | | SYNCHRONIZER/ CONTROL INTERFACE |
| 25 | PRI 2 RANGE DATA | | | ARM TEST DATA HOLD | RESET TEST DATA HOLD | SNAP PRT COUNT | | | | | | | | | | | SYNCHRONIZER/ CONTROL INTERFACE |
| 26 | HSP END AROUND TEST | | | | | | | | | | | | | | | | SYNCHRONIZER/ CONTROL INTERFACE |
| 27 | NOT SAVED - MAKE 0 | | | | | | | | | | | | | | | | |
| 28 | NOT SAVED - MAKE 0 | | | | | | | | | | | | | | | | |
| 29 | AGC TEST SELECT | CLEAR PHASE ADDR CNTR | INCR PHASE ADDR CNTR | PHASE BASE ADDRESS | | | RCVR TEST A/D ON | CW TEST | RCVR PROTECT ON | NOT USED - MAKE 0 | | | BIAS UPDATE/ TEST GEN CODE | | TEST GEN ADDRESS CONTROL CODE | | SYNCHRONIZER/ CONTROL INTERFACE |
| 30 | RECEIVER INTERFACE OUTPUT SELECT | | | RCVR TEST BW SEL | | PHASE COHO REF SELECT | MAINT CONSOLE TEST MON EN | RECEIVER INTER-FACE SPARE | TEST ATTENUATOR CONTROL | | | | | | | RF TEST INPUT SELECT | RECEIVER INTERFACE |
| 31 | RF NOISE SELECT | FREQ GEN SELECT | XMIT DRIVER SELECT | KLYS-TRON OUTPUT SELECT | RF NOISE SOURCE ON | RECEIVER TEST SELECTS | | | RF TEST MONITOR SELECT | | | | IF TEST MONITOR SELECT | | | | RECEIVER INTERFACE |
| 32 | SPARE TO RECEIVER INTERFACE - MAKE 0 | | | | | | | | NOT SAVED - MAKE 0 | | | | | | | | RECEIVER INTERFACE |

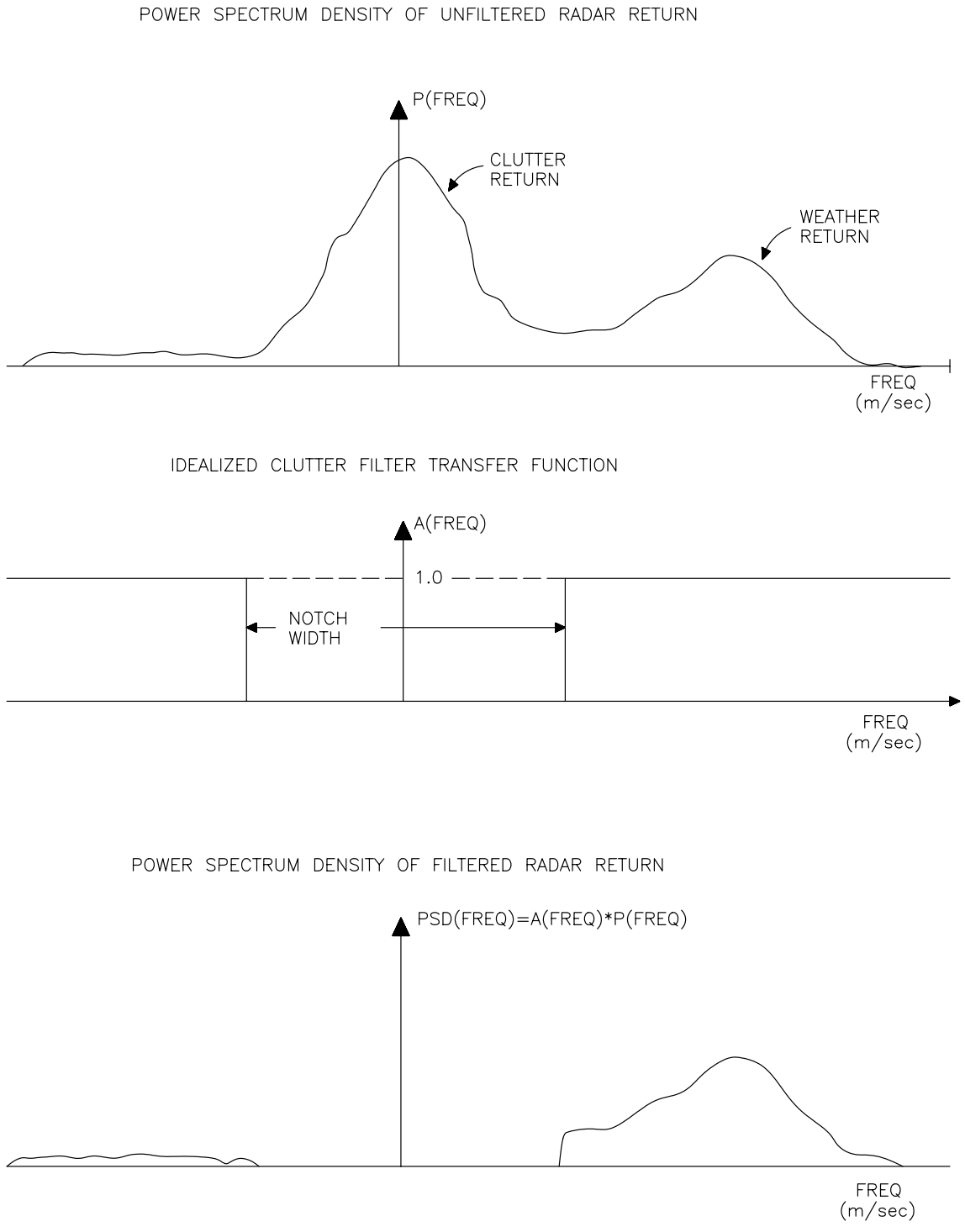


Figure 5-5. PSD/Notch Filter Waveform

5-5.4.4.2 Clutter Filter Control. Two levels of control are provided over the configuration of the clutter filters:

5-5.4.4.2.1 Clutter Filter Bypass Control. The clutter filter bypass control allows clutter filtering to be invoked or bypassed, as required. Since clutter filtering also suppresses any weather-related components of the PSD which fall within the filter notch, clutter filtering should only be invoked in regions where clutter exists. The clutter filter bypass map determines where clutter filtering is to be used.

5-5.4.4.2.2 Clutter Filter Notch Width Control. The clutter filter notch width control allows different filter notch widths to be used depending on the characteristics of the clutter to be suppressed. High, medium, and low suppression levels (corresponding to wide, medium, and narrow notch widths) may be selected. Clutter returns from fixed objects such as buildings have narrow spectrum widths and can be suppressed using a narrow notch width, while returns from objects such as trees, which are subject to wind motion, require wider notch widths for effective suppression. Notch width control is determined by the clutter filter notch width map.

5-5.4.4.2.3 Clutter Filter Bypass Control and Notch Width Control Maps. The clutter filter bypass control and notch width control maps each have low and high elevation segments. The low elevation segments are used for elevation cuts below 2.5 degrees. Each segment has 256 azimuth sectors (at 1.4 degrees per azimuth sector). Each sector contains a control map tailored to the clutter conditions at the corresponding elevation and azimuth regions. The filter notch width determines the width of the velocity notch centered on zero mean velocity. The PSD of clutter is subjected to filtering based on adaptation data and operator inputs.

5-5.4.4.2.4 Volume Scanning. During volume scanning, the RDASC will select and download a set of radial and site specific clutter filter control maps via the PSP IOC. This is done for each radial of data collected, based upon elevation cut and antenna position.

5-5.4.4.3 Clutter Filter Bypass Map. The HSP clutter filter bypass control data contains one bit for each of 512 range bins. Each bit determines whether clutter filtering is invoked or bypassed as follows:

Bypass map bit: Ø = use clutter filter

1 = bypass clutter filter

Figure 5-6 contains a simplified graphic example of how a bypass map might look (the numbers of azimuth sectors and range bins are less than in the actual map). The darkened bins (value of Ø in the actual map) represent areas of clutter where clutter filtering is invoked; light area (value of 1) represent areas where no clutter is present and clutter filtering is bypassed. Building the bypass maps can be accomplished by the WSR-88D in two ways:

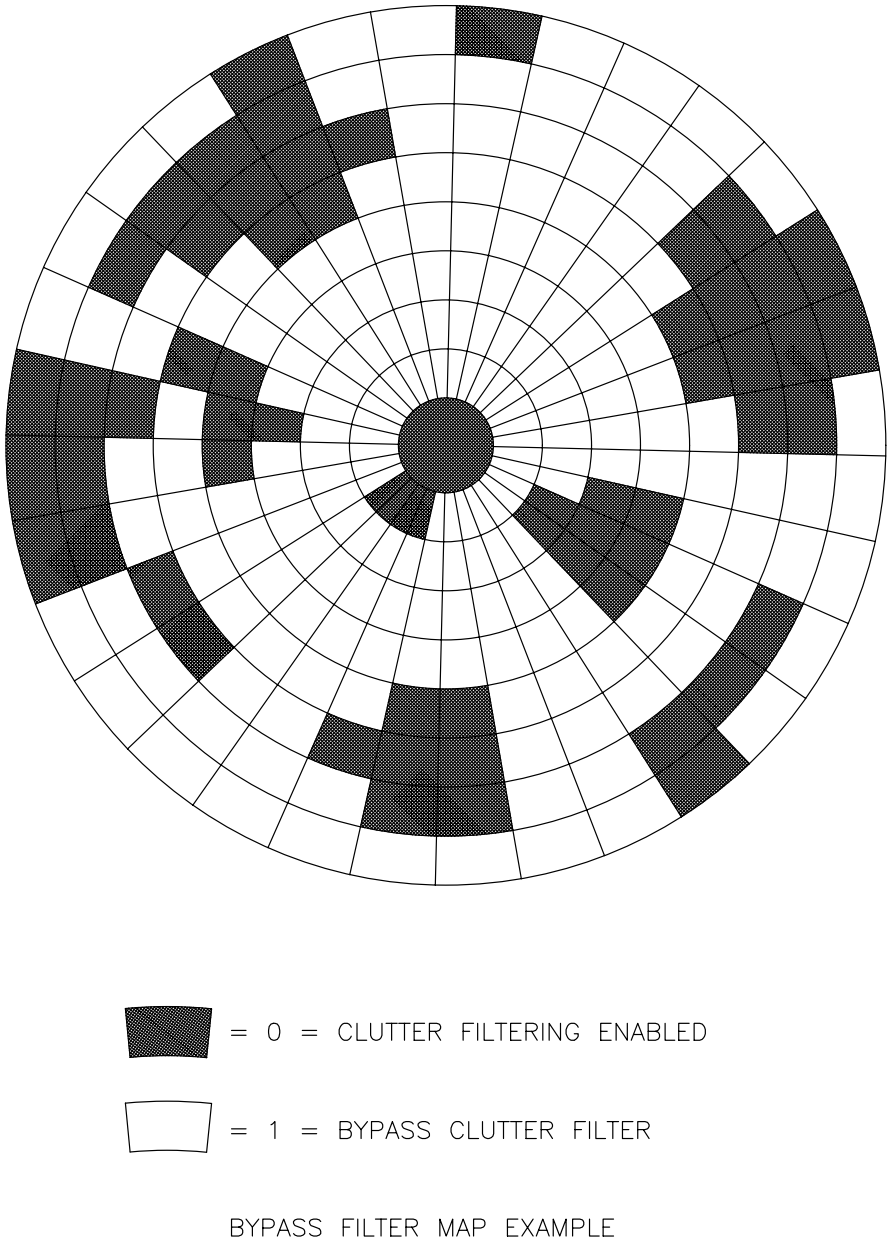


Figure 5-6. Bypass Filter Map Example

5-5.4.4.3.1 Automatically by the RDASOT Program. The RDASOT function, Generate Clutter Map, is used to build the bypass map automatically. Its use is described in detail in NWS EHB 6-510-2, RDASOT User's Guide.

5-5.4.4.3.2 Deleted.

5-5.4.4.3.3 Manually by the MSCF Operator for UD70/170 RPG. The RPG function, Clutter Filter Bypass Edit, described in detail in NWS EHB 6-526, Operations Instructions for Open Systems RPG manual, permits the MSCF operator to edit an existing bypass map or build a new one.

The capability is also provided for the UD70/170 RPG MSCF operator to request and edit the current bypass map regardless of how it was built.

5-5.4.4.4 Clutter Filter Notch Width Control Map. The clutter filter notch width control map data can contain up to 16 distinct, range-specific sets of notch width control data which determine notch width settings to be used for 512 1Km range bins.

The notch width map is built automatically by the RDASC program from two sets of input data:

- Default Notch Width Map
- Clutter Censor Zones

Refer to Figure 5-7 for a simplified graphic example of how this data is structured. Additional details are provided below.

5-5.4.4.4.1 Default Notch Width Map. The default notch width map is defined by RDA adaptation data. (Refer to Table 5-10 for an example.) The map provides for up to 3 range-specific clutter filters for both the low and high elevation segments of the notch width maps. For each of these zones, the following pieces of information are specified:

- Notch Width setting:

  1 = narrow
  2 = medium
  3 = wide

- Operator Select Code:

  Ø = bypass clutter filter unconditionally
  1 = use bypass map bit
  2 = invoke clutter filter.

These control codes apply to all range bins in the zone for which they are defined.

5-5.4.4.4.2 Clutter Censor Zones. The clutter censor zones are entered by the MSCF operator using the RPG's Clutter Suppression Region function. (This function is described in detail in the NWS EHB 6-526, Operations Instructions Radar Product Generation (RPG) manual.) It permits the operator to enter up to fifteen zones. Each zone is demarcated by a beginning and ending azimuth (angle) and a beginning and ending range. It is permissible for zones to overlap. For each clutter censor zone, the operator also specifies a notch width value and an operator select code. These elements are defined the same as in the default notch width map described above. The operator-defined censor zones take precedence over the zones defined in the default notch width map.

5-5.4.4.4.3 RDASC Program. The RDASC program combines the default notch width map and the operator-entered clutter censor zones to produce the notch width map. This is done during system cold start-up and whenever the clutter censor zones are updated by the MSCF operator.

5-5.4.4.5 Clutter Filter-PSP Interface. The filter output combiner (consisting of I/Q data DEMUX and CH2 output register circuits, Figure FO5-10, sheet 2, zone 3B) provides an interface between the clutter filters and the PSP and also plays a role in interference suppression. The filter output combiner provides a 36-bit wide data bus to the programmable signal processor. The data bus is subdivided into two 18-bit fields (6-bit exponent, 12-bit significant) for I and Q data. Data from clutter filters 1 and 2 (A7 and A8) is time multiplexed onto the 36-bit bus. The following describes the data field configuration:

| Range Bin | I-Bus (18 Bits) | Q-Bus (18 Bits)Ø |
|---|---|---|
| Ø | I1 | Q1 |
| Ø | I2 | Q2 |
| 1 | I1 | Q1 |
| 1 | I2 | Q2 |
| . | . | . |
| . | . | . |

**NOTES**

For the present WSR-88D configuration, clutter filter 1 (A7) data is really bypass data, i.e., filter input data is time-aligned to filter output.

When linearized log data is processed by clutter filter 2 (A8), replace I2 by LOG and Q2 by LOG in the above table (same linearized log data in I and Q channels). The PSP provides select lines to multiplex the data as specified.

Filter B data corresponds to clutter filter circuit card position A7. Filter C data corresponds to clutter filter circuit card position A8.

The output combiner performs the following operations depending on the status of the CH 2 Interference Repeat Flag.

Table 5-10. Default Notch Width Map Adaptation Data Example

| | Low Elevation Segment | | |
|---|---|---|---|
| | **Region 1** | **Region 2** | **Region 3** |
| Start Range | Ø | 31 | 116 |
| End Range | 3Ø | 115 | 511 |
| Operator Select Code | Use Bypass Map | Use Bypass Map | Use Bypass Map |
| Surveillance Channel Notch Width | Medium | Medium | Narrow |
| Doppler Channel Notch Width | Wide | Medium | Narrow |
| | **High Elevation Segment** | | |
| Start Range | Ø | - | - |
| Stop Range | 511 | - | - |
| Operator Select Code | Bypass Clutter Filter | | |
| Surveillance Channel Notch Width | - | - | - |
| Doppler Channel Notch Width | - | - | - |

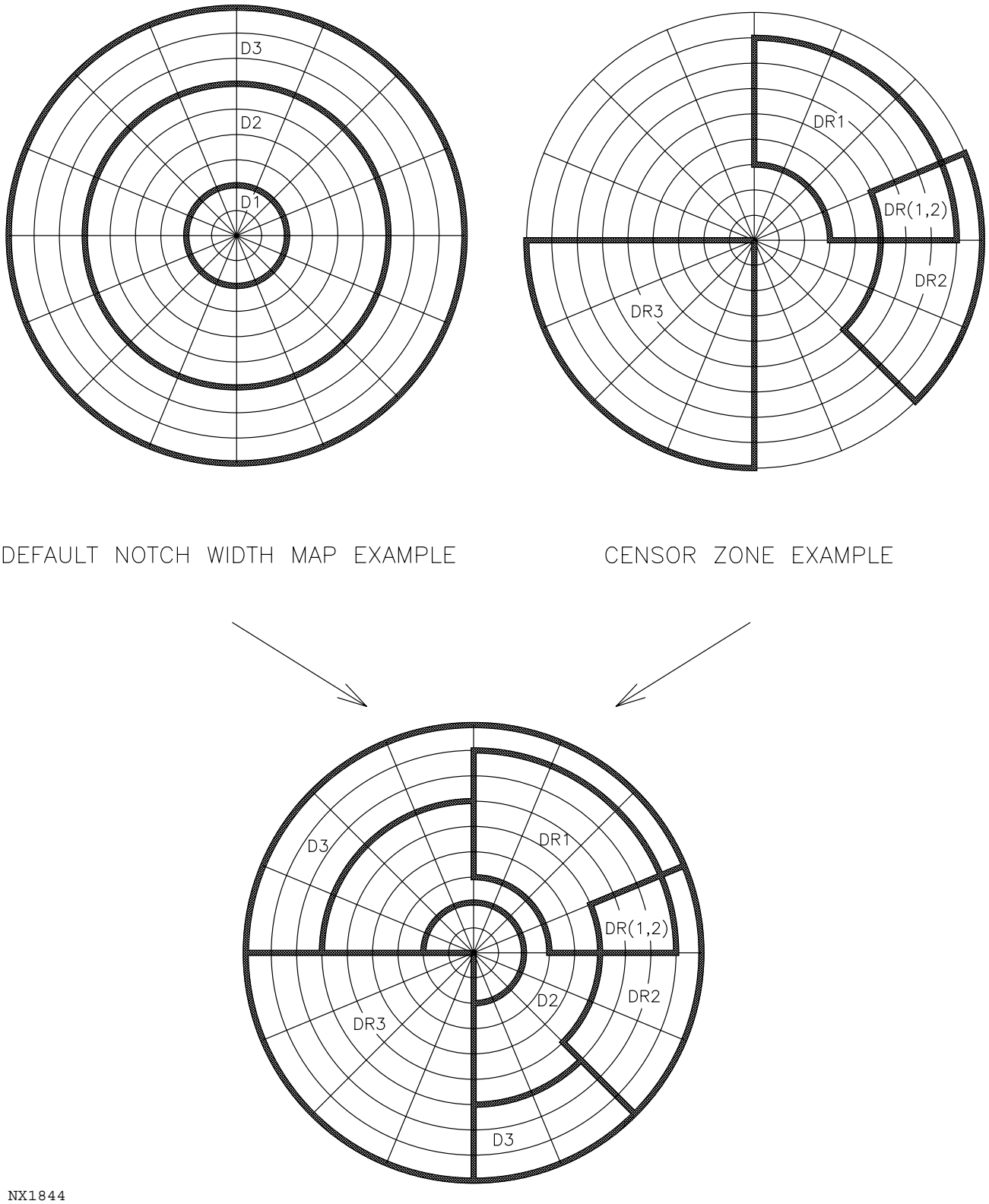


Figure 5-7. Example Clutter Notch Width Map Types

5-5.4.4.6 Ground Clutter Suppression Functional Description. The Ground Clutter Suppression function (Figure FO5-10, sheet 2) consists of Clutter Filters UD5A10A7 and A8, the Clutter Map Filter Output UD5A10A2, and a section of Control Interface C (CIC), 5A10A5.

5-5.4.4.6.1 The clutter filtering (CF) accepts the I, Q, and log video data from the prescaler as CH 2 DATA. The CF circuit also receives the notch width (NW)/gain data CH2 NW/GAIN, from the CIC 2 pulse (or PLS) cancel/notch filter select MUX, which selects either the NW data sent from the notch width output register (zone 6A) or the 2-pulse canceler gain data.

5-5.4.4.6.2 The fifth order/CF takes place in the clutter filter cards located in slots A7 and A8 (Figure FO5-10, sheet 2). The input data, labeled CH 2 DATA, comes from the prescaler. Usually, this data consists of I (in-phase) and Q (quadrature) floating point words, each 22-bits wide with I and Q time multiplexed (alternating I, Q, I, etc.). The timing and control circuits clocks I data into the A7 card input register and Q data into the A8 card input register. If the log channel has been selected, then identical linearized log data is clocked into both A7 and A8 cards.

The filter hardware implements a set of difference equations. The equation form and the constant coefficients have been selected to generate a fifth order elliptic filter. Figure 5-8 shows how the filter algorithm was developed. The starting point is the z-transform for a general fifth order filter having one real zero, two sets of complex conjugate zeros, one real pole, and two sets of complex conjugate poles. The z-transform in Figure 5-8 is written as a product of terms which generate poles and zeros in the following order: one simple pole, one simple zero, a pair of complex conjugate poles, a pair of complex conjugate zeros, a pair of complex conjugate poles, and finally a pair of complex conjugate zeros.

This form of the z-transform suggests an efficient and accurate processing procedure also shown in Figure 5-8 in a data flow diagram. The input is X(z) in the z domain, $x_n$ in the discrete time domain. Various nodes are labeled (U(z), $u_n$), (V(z), $v_n$), (W(z), $w_n$) and (Y(z), $y_n$). Note that the data flow diagram describes the order and type of processing which takes place in the clutter filter card but not the hardware block diagram which is based on more primitive operations and, thus, very different.

The difference equations describe the mathematical operations which are performed on the input times series, $x_n$, and the time series $u_n$, $v_n$, and $w_n$ corresponding to the intermediate nodes of the data flow diagram to produce the output time series $y_n$. The difference equations may be written almost by inspection by observing, for example, that

$$V(z) = U(z)(1 - z^{-1})/(1 - Cz^{-1} + Dz^{-2})$$

Multiplying both sides by the right side denominator, obtains

$$V(z)(1 - Cz^{-1} + Dz^{-2}) = U(z)(1 - Z^{-1})$$

Noting that multiplication in the z domain by $z^{-1}$ is equivalent to a delay of one sample in the discrete time domain, the difference equation for V(z) is

$$v_n = u_n - u_{n-1} + Cv_{n-1} - Dv_{n-2}$$

Applying the same principles to all of the labeled nodes, the complete set of difference equations written below is obtained:

$$u_n = Ax_n + Bu_{n-1}$$

$$v_n = u_n - u_{n-1} + Cv_{n-1} - Dv_{n-2}$$

$$w_n = v_n - Ev_{n-1} + Pv_{n-2} + Fw_{n-1} - Gw_{n-2}$$

$$y_n = w_n - Hw_{n-1} + Qw_{n-2}$$

To clarify the hardware implementation, these difference equations are rewritten as BASIC program statements below. The variables X, U, V, W, and Y replace the variables $x_n$, $u_n$, $v_n$, $w_n$, and $y_n$. Similarly, U1, V1, V2, W1, and W2 replace $u_{n-1}$, $v_{n-1}$, $v_{n-2}$, $w_{n-1}$, and $w_{n-2}$. The suffixes 1 and 2 are used to indicate the previous (1 old) sample and the 2 old sample whereas variables without suffixes are the current (just updated) samples. The difference equations written as program statements are

```
U = A*X + B*U1

V = U - U1 + C*V1 - D*V2

W = V - E*V1 + P*V2 + F*W1 - G*W2

Y = W - H*W1 + Q*W2

U1 = U

V2 = V1

V1 = V

W2 = W1

W1 = W
```

The last five statements starting with U1 = U create the 1 old and 2 old variables for use in the next pass through the program.

A study of the program statements reveals the following:

- There are 10 coefficients not counting +1 and -1, namely: A, B, C, D, E, F, G, H, P, and Q.
- There are 11 multiply accumulate operations, namely: A*X, B*U1, -U1, C*V1, -D*V2, -E*V1, P*V2, F*W1, -G*W2, -H*W1, and Q*W2.
- Five storage locations (or variable names) are required to represent delayed samples, namely: U1, V1, V2, W1, and W2.
- The variables U, V, W, and Y represent accumulations of products. These variables must be evaluated in the sequence given. U, V, and W need to be saved separately in order to implement the last five statements. However, a single accumulator can evaluate all of them since each variable, after being evaluated, is the first term in the next program statement.

z−TRANSFORM

$$H(z) = \frac{A}{1-Bz^{-1}} \cdot (1-Z^{-1}) \cdot \frac{1}{1-Cz^{-1} + Dz^{-2}} \cdot (1-Ez^{-1} + Pz^{-2}) \cdot \frac{1}{1-Fz^{-1} + Gz^{-2}} \cdot (1-Hz^{-1} + Qz^{-2})$$

DATA FLOW DIAGRAM

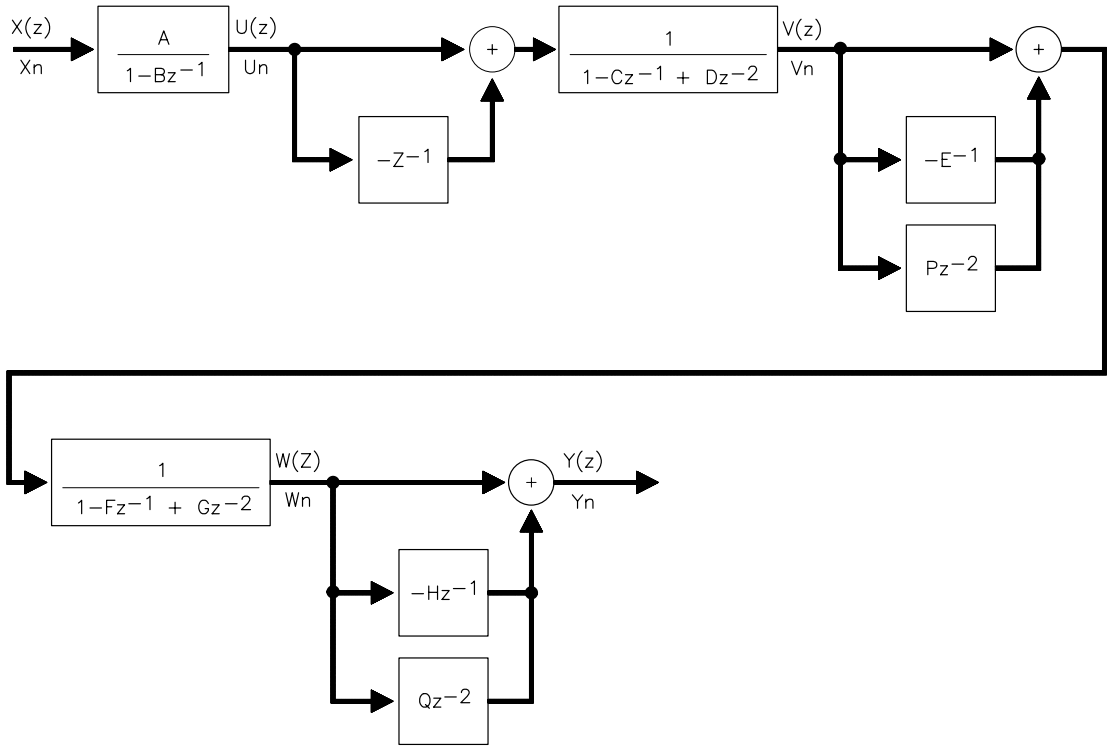


NX1845

Figure 5-8. Fifth Order Filter Algorithm

Another design consideration is that the filter is a comb filter, i.e., the filter operates on each range bin independently. Thus, each of the variables in the program statements must be replaced by arrays. U1, V1, V2, W1, and W2 become U1(K), V1(K), V2(K), W1(K), and W2(K) where K is a range index going from the first range bin to the last range bin step one. For each K, the filter executes all of the program statements. The sample interval is the interval between transmitter pulses and the delayed samples represent the echo returns on previous receive intervals at a particular range.

The hardware elements (Figure FO5-10, sheet 2) perform the following functions:

1. Coefficient PROM. This unit holds the 10 coefficients described above, a representation of unity, coefficients associated with filter initialization, and coefficients associated with a 2 pulse canceler for possible use in the processing of linearized log data (a feature never used outside the lab). The register in front of the coefficient PROM is used to resynchronize the notch width control (labeled CH 2 NW/GAIN) to the timing requirements of the clutter filter.

   The values of the coefficients are selected to generate a stop band elliptic filter having the characteristics specified in the CPCI04 B2 specification. The address to the coefficient PROM consists of two fields:

   - CH 2 NW/GAIN coming from the clutter map card. This 7-bit field specifies 1 of 128 different sets of coefficients, each generating a different notch width. The notch width map (6-bits wide) and the notch width scale factor determine the value of CH2 NW. This approach to controlling the notch width allows a fairly simple notch width map to specify the notch width in meters per second with a single number rather than defining the entire set of filter coefficients.
   - A 4-bit field from the timing and control circuit selects the particular coefficient of the set selected by CH2 NW needed by the multiplier/accumulator.

2. Data Input Register. This register holds one sample of I (or Q). The register is used to demultiplex the I and Q data on the input data bus labeled CH 2 DATA. The register has a tri-state output to permit selection of Y inputs to the floating point multiplier/accumulator from several sources.

3. Floating Point Multiplier/Accumulator. This unit performs the 11 multiply/accumulates discussed above. Note that there are several layers of pipelining in this unit so that several multiply/accumulates are in various stages of evaluation at any one time.

4. 16K x 24-bit RAM. This unit holds the arrays U1(K), V1(K), V2(K), W1(K), and W2(K) for K = first range bin to last range bin.

5. Two Port RAM. This unit provides 16 temporary memory locations. Two locations are accessible at any one time. For range bin K, the 5 words U1(K), V1(K), V2(K), W1(K), and W2(K) are transferred from the 16K x 24-bit RAM to the 2 Port RAM via the D input. These values are supplied via the A output port to the Y input of the floating point multiplier/accumulator as needed to evaluate the previously

described expressions. The last 5 program statements are implemented by transfers from the 2 Port RAM via the B output port to the 16K x 24-bit RAM and by transfers from the floating point multiplier/accumulator output to the 2 Port RAM.

6. Filter Bypass Register. This register provides a filter bypass which is controlled by the bypass map. Selection of the bypass data causes the data in the bypass register to be transferred to the output register. The filter continues to operate as before so as to maintain the clutter filter RAM memory. The register also provides a pipeline delay equal to that of the floating point multiplier/accumulator.

7. Dedicated Bypass Register. This is a two stage register which provides a filter bypass output not controlled by the bypass map. It replaces the channel 1 clutter filter when the card slots for it are not populated. For this case, channel 1 is still present but the data is not clutter filtered. The register pipelines the bypass data so that it is time aligned with the channel 2 data.

8. Output Register. This register holds the final result of the clutter filter calculations or filter bypass register. It has a tri-state output which is used to time multiplex the A7 (I) and A8 (Q) outputs onto a single 22-bit wide bus which goes to the filter output combiner.

9. Parity Generator and Checker. On read operations of the 16K×24-bit RAM, parity is checked and if not correct, a parity alarm is generated. On write operations of the 16K×24-bit RAM, the parity bit is generated and placed on the RAM I/O bus which is written into the RAM.

10. Timing and Control. This unit generates the read/write controls and addresses, the coefficient PROM 4-bit address field, the tri-state controls, input and output enables, and the clock strobes. The control logic has a sequencer which generates the successive states of the various control lines. The sequencer is clocked at 9.6 MHz and generates a block of 16 states to process one I (or Q) input sample, thus the input samples are processed at a rate of 9.6/16 MHz = 0.6 MHz, which is the data rate of the samples. Note that 16 states is sufficient since there are 11 multiply accumulates required. Note that most of the move operations occur in parallel with the floating point multiplier/accumulator operations.

The timing and control circuits unit has a number of external control inputs which perform the following functions:

- FORCE CH BYPASS. The RDASC processor can force filter bypass to occur no matter what the bypass clutter map contains.

- BYPASS CMD OUT. The filter receives bypass commands from the Bypass Clutter Map.

- A7 INTRF TAG CMD. When the receiver detects pulse interference, it generates a flag which the clutter filter uses to inhibit the updating of RAM to largely eliminate contamination of the RAM with interference data. The net effect is to prevent smearing of interference over azimuth after the occurrence of interference due to the

extended impulse response of the fifth order elliptic filter. The interference tag also causes the clutter filter to output zero. This in effect deletes the interference sample from the radar data going into the algorithms which compute the weather base data in the PSP.

- CH 2 FILTER B CODE 0-3. The clutter filter receives codes from the control interface which govern its operations. The clutter filter may perform fifth order elliptic filtering with or without filter initialization either on receiver linear channel data or on log channel data, may operate on contiguous waveforms, batch waveforms, or stagger pair waveforms.
- HSP HALT and CLR. The halt and clear commands from the control interface are used to initialize the timing and control circuits.
- CH 2 OPERATION. This flag and the following flag are related to whether the channel 1 clutter filter card slots are occupied or not. When the channel 1 card slots are not occupied, the channel 1 data is supplied by the channel 2 dedicated bypass register, i.e. by unfiltered data pipelined to the filtered data.
- CH 2 and 1 OUTPUT ENBL.

5-5.4.4.6.3 The generation of controls and commands for the clutter filter takes place in the clutter filter control data and timing signal generator, filtering range cell collation memory, the scratch pad memory, and the parity generator and checker. The timing signal generator accepts the CH 2 FILTER B CODE 0-3, HSP CLEAR, and HSP HALT signals from the CIA UD5A10A1 (Figure FO5-10, sheet 3) in the timing and control function; the BYPASS CMD signal from the clutter map CIC UD5A10A5, and the A7 INTRF TAG CMD (Interference Tag Command) signal from the prescaler in the Interference Tag Processing function (Figure FO5-10, sheet 7). These signals are used to control the operation of the I/Q data.

5-5.4.4.6.4 The filtering range cell collation memory is used to store the result data from one pulse repetition time (PRT) to the next. This is done in order to check the validity of the base data before any further computations are performed.

5-5.4.4.6.5 The parity generator and checker receives the RST PARITY ALARM signal to reset the previous parity alarm, if generated. Parity alarms represent all parity errors from previous read time to present read time. The parity checker accepts the output data and checks for any parity error. If an error occurs, then the network will output the PARITY ALARM signal to the clutter filter parity error gate circuit in the HSP and Receiver Status Data Collection function (Figure FO5-10, sheet 8, 3B) for evaluation.

5-5.4.4.6.6 The data in the clutter filter output register is sent onto the CH 2 clutter filter output data bus and then transmitted to the filter output combiner I/Q Data DEMUX circuit as CF OUTPUT DATA (Figure FO5-10, sheet 2, 4B).

5-5.4.4.6.7 The filter output combiner (zone 3B) receives I, Q, and log data from the clutter filter output register via the CH 2 clutter filter output data bus. The I and Q data DEMUX latches them onto the parallel I and Q data bus. The I and Q Data DEMUX transmits the I and Q data to the CH 2 output register and onto the test bus (MONITORED CH 2 I/LOG and Q/LOG DATA) when

the timing and control signals are sent. This monitored clutter filter output data is transmitted to the monitored I/Log, Q/Log test data register (sheet 8, 5B) for evaluation. The CH 2 output register sends the data onto the CH 2 data out bus where it is transmitted to the PSP Input Signal Conditioner (ISC) UD5A9A1 and arithmetic units for further processing.

5-5.4.4.7 Clutter Map. The RDASC processor transmits the clutter map data to the Clutter Map/Filter Output UD5A10A2 circuit card, (Figure FO5-10, sheet 2), via the PSP and the HSP Timing and Control function (Figure FO5-10, sheet 3) as CI WR DATA (zone 11B), one radial at a time. This is done for each radial of data collected, based upon the elevation cut and antenna position. Clutter map also receives the CONTROL INTERFACE WR ADDRESS (CI WR ADRS) from timing and control. The CI WR DATA is sent to the radial notch width/bypass map ping-pong memory circuits.

5-5.4.4.7.1 The CLUTTER MAP RNG Ø signal from the Receiver and Transmitter Synchronization function (sheet 5) is input to the notch width and bypass map read address generator. The generator output is sent to the input of the notch width/bypass map read address selection multiplexer. The generator is clocked by a .6 MHz PH Ø clock. The output from the generator is either a NW counter output or a range counter output as a result of comparison of the clutter map notch width feedback signal from the capture range end word register. The output from the notch width/bypass map read address selection MUX is sent to the radial notch width/bypass map ping-pong memory (RAM 1 and RAM 2) circuits.

5-5.4.4.7.2 The data is written into one-half of the ping-pong memory for the next radial while the other half is read for control of the current radial. The data read from the ping-pong memory is outputted to bypass data capture and parallel-to-serial converter. The parallel-to-serial converter converts the data into serial format for easier transmission and processing in the bypass command logic circuitry. The bypass command logic creates the BYPASS CMD OUT signal which is sent to the clutter filter.

5-5.4.4.7.3 The CI WR DATA is also received by the capture notch width scale factor (NWSF) and CH 2 interference repeat flag circuit (zone 8A). This circuit stores the scale factors for the raw data being processed in the clutter filter. The outputs of the NWSF circuit and the NW register are combined and sent to the NW normalization PROM. The scale factor data is then sent to the NW output register. It is also sent as monitored notch width data to the NW test data register (Figure FO5-10, sheet 8, 5B), and outputted onto the HSP test bus and to the PSP.

5-5.4.4.7.4 Note that a FORCED FILTER BYPASS bit from the RDASC processor may be sent to cause the filter to be bypassed for all ranges no matter what the clutter map data says. Access to the filter control lines is provided via the operator control bits, the notch width fields, and the range end fields.

5-5.4.4.7.5 The capture 2-pulse canceller gain data and force CH 2 bypass command circuits (zone 7B) receive the CI WR DATA (destination 7, word 3 bits), RGTR WR ADRS, WR STROBE 3, and P/P1 timing signals. The write data is loaded into a 2-pulse canceller gain register file from the RGTR WR ADRS and WRITE STROBE 3 signal inputs. This data is the correction for the return Doppler radar pulses which have a tendency to “drop out”, i.e., the Nyquist frequencies. The output from the canceller register file and the output from the clutter map notch width output register are input to the 2-pulse cancel/notch filter select multiplexer. The multiplexer

selects either the notch width data or 2-pulse canceller data for input to the Clutter Filters, UD5A10A7 and A8.

5-5.4.5 HSP Timing and Control. The HSP Timing and Control function (Figure FO5-10, sheet 3) contains the major timing circuits for HSP operation. It can be thought of as the master timing and command center of the WSR-88D system. These functions are implemented by circuit card assemblies Control Interface A (CIA) UD5A10A1, Control Interface B (CIB) UD5A10A3, Control Interface C (CIC) UD5A10A5, and Clutter Filter UD5A10A7.

1. As a whole, the timing and control circuits produce most of the enable signals, address codes, select lines, clock pulses, and test data for the rest of the system. It receives test signals from the rest of the system and processes them in order to generate control signals for internal and external control.

2. CIA receives the BFR (buffered) WR DATA, and BFR WR ADRS (address), and BFR SPARE SELECT signals from the PSP, and latches the signals into the input (data and address) registers and destination register, respectively. The BFR WR DATA is outputted from the input register as CI WR DATA and sent to all of the other HSP cards, except for the clutter filter.

5-5.4.5.1 Write Strobe Generation. The input address register outputs CIA WR ADRS to the CIA destination 7 data word write strobe generator logic circuits via the register file write address generator logic circuits (zone 8B). The write strobe generator converts the CIA WR ADRS data into the write strobes for the CIA (A1) card and the Synchronizer UD5A10A4. It receives the RGTR WR ENBL signal from the destination data block write control signal generator in order to enable the address generator. These strobes are outputted onto the write strobe bus and sent to the synchronizer. The address generator is used to generate the write addresses for internal control, the synchronizer, the video prescaler, and the clutter filter. The address generator utilizes two PROMs, which are controlled by the CIA P/P signal, to generate the write addresses. The control address signal is sent to the synchronizer as part of the synchronizer register file addresses.

5-5.4.5.2 CIB Write Strobe Generation. The CI WR ADRS output of the input registers (zone 10B) is also sent to the CM (clutter map) ADRS Decode Prom (a group of registers which emulate the function of a PROM) for processing the addresses that are sent to the CIB destination 7 data word write strobe generator logic circuits and also to other functions in the HSP. The write strobe generator logic circuits generate the write strobes used internally in the CIB (A3) card and sent to the CIC (A5) card (zone 7A).

5-5.4.5.3 Destination 7 Registers. The capture misc destination 7 control word 3 and 29 register files (zones 8B, 8A, respectively) receive the CI WR DATA output from the input registers, the RGTR WR ADRS from the address generation logic circuits, and the write strobes from the write strobe generation logic circuits. At the proper time, on command from the write strobe inputs, the registers send the CH 2 LOG SELECT signal to the clutter filter code generator logic circuits (zone 5A) and various outputs to other functions in the HSP (zone 9A) including the synchronizer, test and control signals and enabling signals.

5-5.4.5.4 Command Generation. The BFR SPARE SELECT bus input is sent from the PSP to the CIA and latched into the destination data block write control signal generator (destination

generator) circuits. The write pulse detector logic generates the LOCK INPUT RGTRS signal from the BFR EX WRITE PLS input signal which enables the destination generator. The destination generator generates the write enable and data enable signals for internal control as well as for the rest of the HSP.

5-5.4.5.4.1 The capture PRT register file (zone 7B) counter and detection network receives the CI WR DATA from the write data bus and generates the PRT signals (PRT1 CNT and PRT2 CNT). These signals are used to address the radial sequencer and ping-pong RAM bank select signal generator (zone 6B). The radial sequencer generates the PRT2 and ping-pong of the synchronizer register file addresses, the LAST PRT for the receiver write control PROMs, and address for the HSP halt/clear logic. The HSP halt/clear logic combines the address from the radial sequencer with other signals from throughout the CIA card and generates the DEGREE RADIAL signal (via the degree radial logic) for the PSP, the HSP CLR for the clutter filter, the HSP HALT for the clutter filter synchronizer, and the CLR HSP START CMD for the PSP.

5-5.4.5.5 Capture Filter Codes. The clutter filter codes are generated by a network containing the capture waveform mode data/halt synchronizer command (register file) (zone 7A), and the clutter filter code generator (zone 5A). The waveform mode register file receives the CI WR DATA signal from the CI write data bus and is enabled by the RGTR WR ADRS signal from the register file write address generator logic, and generates WAVEFORM MODE DATA which is sent to the clutter filter code generator. The clutter filter code generator processes this data to generate the filter codes and the NOTCHWIDTH MUX SELECT sent to the 2 Pulse Canceller/Notch Width Multiplexer (Figure FO5-10, sheet 2, zone 7B). The generator also produces the SWEEP IN PROGRESS (SIP) RST ENBL and the AU WRAP ENBL signals, which are sent to the synchronizer. The CH 2 FILTER B CODE and CH 2 FILTER C CODE signals are sent to the clutter filter cards A7 and A8, respectively. Their purpose is to tell which filter is to accept the appropriate data at the correct time.

5-5.4.5.6 Clock Distribution. The master 9.6 MHz clock distribution buffers (zone 10A) receive the 9.6 MHz clock input from the frequency generator in the receiver. After buffering and processing, 9.6 MHz and 4.8 MHz x 8 clock signals are distributed throughout the HSP. The 4.8 MHz x 8 CLK signal is output to the PSP (zone 2A) via a Clutter Map Filter Output UD5A10A7 card register (zone 8A). The receiver/HSP control clock generator circuit (zone 6A) outputs AGC, A/D, and Log/Lin serial clocks to the receiver, and clutter map and prescaler clocks for the Video Prescaling (Figure FO5-10, sheet 1) and Ground Clutter Suppression (sheet 2) functions.

5-5.4.6 Receiver, Transmitter, and HSP Synchronization. The Receiver, Transmitter, and HSP Synchronization function (synchronizer) provides computer controlled range counters and range decoding logic to generate timing triggers, clocks, and gates for the transmitter, receiver, signal processor, and receiver test panel. It provides computer-controlled radial sequencer counters and decoding logic to control radial timing and generate radial clocks. The range counter and radial counter logic, in combination, generate the following waveform types:

- Contiguous
- Batch
- Staggered pair

For each waveform type, a radial consists of a specified number of pulses. The number of pulses transmitted, the PRT, and the azimuth scan rate control the azimuth extent of the radial. Radials normally have an azimuth extent of 1 degree.

5-5.4.6.1 Contiguous Waveforms. For contiguous waveforms the synchronizer generates uniformly spaced transmitter triggers. Other key signals generated are radial clocks (see Figure 5-9). The waveform is specified by the RDASC processor for a radial as follows:

- Number of PRTs in a radial
- First PRT
- Second PRT (same as first PRT, for contiguous waveforms)

5-5.4.6.2 Batch Waveforms. The batch waveform consists of surveillance PRTs followed by Doppler PRTs (see Figure 5-10). The waveform is specified by the RDASC processor for one radial as follows:

- Number of surveillance PRTs in a radial
- Number of Doppler PRTs in a radial
- Surveillance PRT
- Doppler PRT

5-5.4.6.3 Staggered Pair. The waveform is specified by the RDASC processor for one radial as follows:

- Total number PRTs in radial (must be even)
- First PRT
- Second PRT

Long and short PRTs alternate over the radial. This waveform is currently not utilized in the NEXRAD, although the capability does exist in the hardware. Use of this waveform would be to resolve velocity ambiguities.

5-5.4.6.4 Synchronizer Functional Description. The synchronizer (Figure FO5-10, sheets 4 and 5) receives the CI WR DATA (Destination 7 Words 8 and 9 (D7W8,W9) PRT 1 and 2 length) from the HSP Timing and Control function and are batched into the following registers:

- Capture PRT 1 and 2 Length Data (sheet 4, 7B)
- Capture Generate Mod and RF Drive Triggers and Pulse Width Control commands (sheet 4, 7A)
- Capture PRI 1 and 2 Range Data (sheet 4, 7A)
- Capture RF Pulse Range Data (sheet 4, 4B)

- Capture Programmed Sweep In Progress (SIP) Set and Reset Data (sheet 4, 3B)
- Capture PRT 1 and 2 Mod Charge Triggers (sheet 5, 7B)
- Capture PRT 1 and 2 Trigger Charge Trigger (sheet 5, 7B)
- Capture PRT 1 and 2 Filament Reset Data (sheet 5, 6B)
- Capture Arithmetic Unit Wrap Around Range (sheet 5, 5B)

The data is latched into the registers on command by write strobes received from the HSP Timing and Control function (Figure FO5-10, sheet 3). The synchronizer registers send their outputs to comparators when commanded by the RGTR WR ADRS signals received from the HSP Timing and Control function. The comparators also receive a range counter value from a range counter (sheet 4, zone 7B). When the range counter value and the register file outputs are equal, the comparator will output the data and send it to their respective output stages for further processing. The range counter also sends the counter value to the range latch (sheet 4, zone 5B). At regular intervals, this data is sent to the CIB test data selection control signal generator in the HSP and Receiver Status Data Collection function (sheet 8, 6A) for evaluation and feedback corrections. The data is also sent to the trigger interlock logic (sheet 4, zone 5A) where, with the use of the generation triggers (GEN MOD TRIG and GEN RF TRIG) and MOD PULSE WIDTH WIDE signals from the CIC (zone 6A), and a LATCH RANGE DATA signal, they generate the ENBL HIGH PWR TRIGS and the ENBL LOW PWR TRIG signals. These two enable signals are used to generate the RF GATE, RF PULSE START, RF DRIVE TRIGGER, and an RF PULSE MAINT output to an external connector. The RF GATE is sent to the receiver master signal generator and the RF PULSE START and RF DRIVE TRIGGER signals are sent to the Transmitter Control and Monitoring function. The START GEN signal input from the comparator (zone 4B) initialize the start of the triggers from the RF pulse trigger and gate generator and interlock logic circuits.

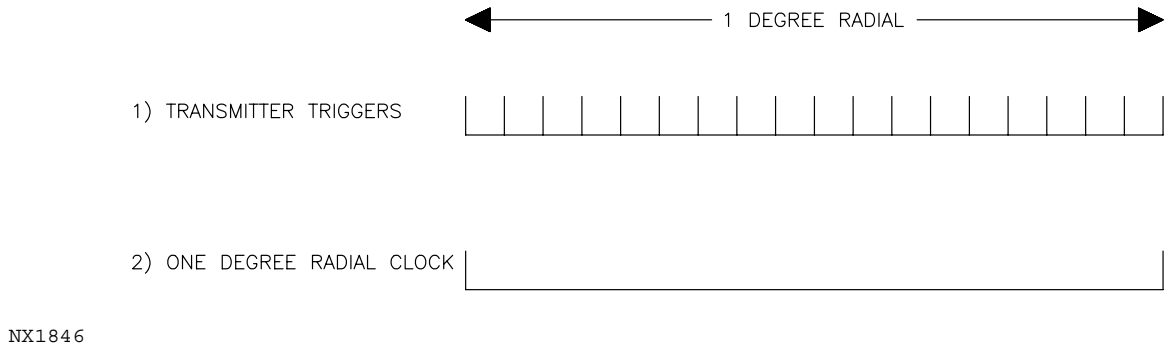


Figure 5-9. Contiguous Waveforms Timing Signals

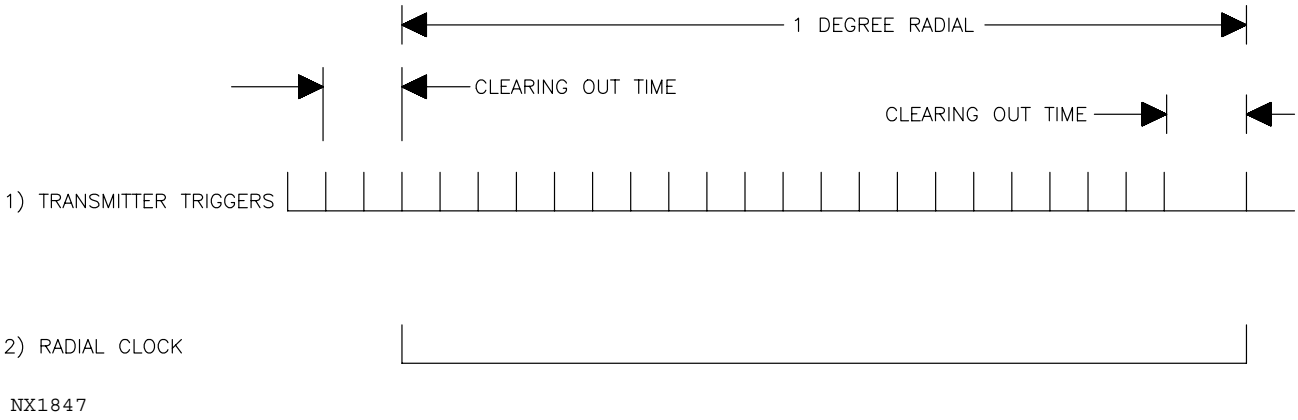


Figure 5-10. Batch Waveform Timing Signals

5-5.4.6.4.1 Timing and Control Signals. The (INITIALIZE GENERATION) signals from the range count/PRT length comparator (Figure FO5-10, sheet 4, zone 7B) are sent to the generate synchronizer timing and control signals network. It is here that the timing and command signals are generated. These signals are outputted onto the HSP timing and control bus and are split up to send some of the signals to the HSP and Receiver Status Data Collection function and the rest are used internal to the synchronizer as INT CTRL SIGS.

5-5.4.6.4.2 Receiver Protect Command. The CATHODE PULSE signal, which is sent from transmitter via the receiver goes to the receiver protect control logic (sheet 4, zone 6A) circuitry. This network combines the CATHODE PULSE signal, the RCVR PROTECT ON CMD signal, and the RCVR PROTECT SET/RST signal to produce the RCVR PROTECT CMD, which is sent to the receiver front end to protect the hardware from high voltage transmitter pulses.

5-5.4.6.4.3 AU Wrap Around. The AU WRAP COMPARE and READ ADRS signals from the capture arithmetic unit wrap around range register file and comparator (Figure FO5-10, sheet 5, zone 5B) are sent to the AU wrap around logic. This logic circuit generates the AU WRAP AROUND command which is sent to the PSP ISC to instruct which arithmetic unit should be utilized.

5-5.4.6.4.4 Transmitter Signals. The capture PRT 1 and 2 filament reset register file and comparator (sheet 5, zone 6B) FIL COMPARE signals are sent to the filament set/reset pulse generator. The pulse generator utilizes a sync timing signal and generates the FILAMENT SET/RESET PULSE signals. (See Figure 5-11 for Transmitter Trigger Diagram.)

5-5.4.6.4.4.1 The capture PRT 1 and 2 modulator charge trigger register file and comparator (sheet 5, zone 7B) send their MOD CHARGE DRIVE signal to the modulator charge trigger pulse shaping and interlock logic. This logic circuit uses one of the sync timing signals and outputs the MOD CHARGE TRIGGER signal.

5-5.4.6.4.4.2 The modulator discharge trigger pulse shaping and interlock logic (sheet 4, zone 2A) produce the MOD DISCHARGE TRIGGER signal. The logic is enabled by the output of the wide/narrow modulator discharge trigger select MUX. The MUX inputs come from the sync timing

and control generator and from the 1.5 and 4.0 delay adjust counters. These counters are initialized by two sets of dip switches which can be set to the desired initial value.

5-5.4.6.4.4.3 The Capture PRT 1 and 2 trigger charge trigger register file and comparator (sheet 5, zone 7B) send their TRIGGER CHARGE INPUT signal to the trigger charge trigger pulse generator and interlock logic. The pulse generator logic, on action of a sync timing signal, produces the TRIGGER CHARGE TRIGGER signal.

**NOTE**

The HSP HALT signal from the HSP Timing and Control function will disable the synchronizer after the current radial is complete. It causes all trigger generators, radial clocks, and the destination 7 command bank to be disabled. When the HSP START command is received, the synchronizer will generate an extra PRT interval prior to generating the radial trigger to provide time to charge the pulse forming network and sent controls to the receiver. The HSP HALT signal is received at zone 8B on sheet 4.

5-5.4.6.4.5 Sweep in Progress. The capture programmed sweep in progress (PSIP) set and reset register file and comparator (Figure FO5-10, sheet 4, zone 3B) sends the PSIP CMD signal to the programmed/hardware sweep in progress command selection circuit. This signal is combined with the PSIP FLAG signal from the HSP Timing and Control function and the HARDWARE SIP CMD signals, to produce the SWEEP IN PROGRESS signal. This signal is sent to the PSP ISC to indicate that the clutter filter is outputing data.

5-5.4.6.4.6 RF Pulse Generation. The capture RF pulse range data register file and comparator (Figure FO5-10, sheet 4, zone 4B) sends the START GEN signal to clear the RF pulse trigger and gate generator and interlock logic. The logic circuit takes signals from the RF count decode PROM, the HSP HALT signal, and the ENBL LOW PWR TRIG signal and outputs the RF GATE, RF PULSE START, and RF DRIVE TRIGGER to the receiver to flag that the transmitter is sending out pulses.

5-5.4.7 Receiver and HSP Test Data Generation. The Receiver and HSP Test Data Generation function (Figure FO5-10, sheet 6) receives the write data, write controls, addresses, enables, and timing signals from the HSP Timing and Control function (sheet 3), and the TØ and T-TEST GEN signals from the synchronizer (sheet 5). Outputs produced (zone 4B) are the I, Q, and LOG SERIAL TEST VIDEO and TEST AGC POSITION data which are sent to the prescaler (sheet 1); TEST INTRF TAG is sent to the Interference Tag Processing function (sheet 7); A/D converter test data, commands, and clocks (A/D CONV TEST/BIAS DATA & CLK, A/D CONV TEST CMD) are sent to the receiver along with AGC TEST DATA/ENBL.

5-5.4.7.1 AGC Test Data. The AGC controller test data generator (zone 9B) receives the Time Ø (TØ) signal from the synchronizer and the AGC TEST SELECT signal from the Receiver Control Data Generation function (zone 9A). The TØ signal enables a test address counter which is loaded with AGC counter load data. The counter inside the AGC controller test data generator circuits outputs this value to an AGC test PROM enabled by the AGC TEST SELECT signal. The PROM generates the AGC TEST DATA and sends it to the receivers AGC Controller UD4A13 during the performance of the IF attenuator calibration (paragraph 5-4.9.6 ).

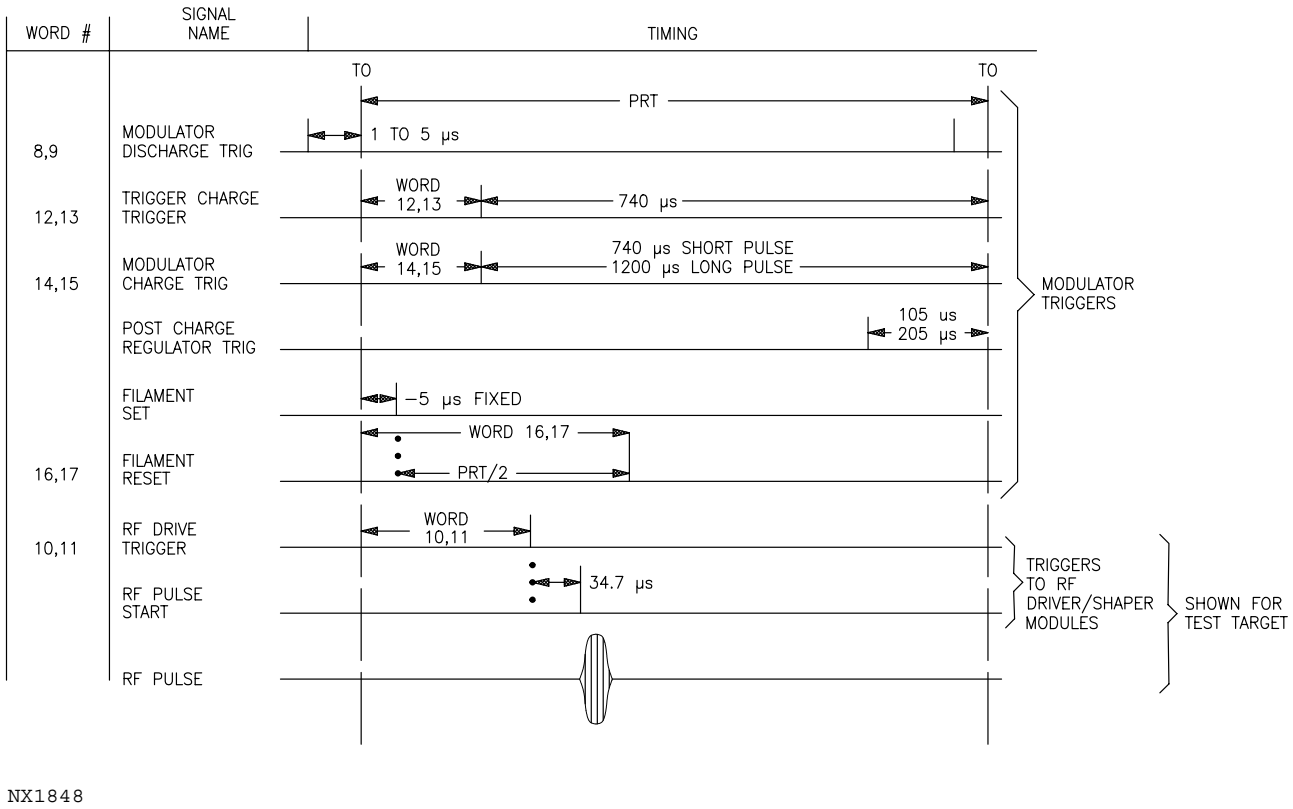


Figure 5-11. Transmitter Trigger Diagram

5-5.4.7.2 Prescaler and A/D Converter Test Selection. The prescaler and A/D conversion test selection logic circuit (zone 8B) receives the BIAS UPDATE/TEST GEN CODE, FIX AGC COMP FACT, and PS OUTPUT DATA GATE signals from the HSP Timing and Control function. The test selection logic produces the A/D CONVERTER TEST CMD signal for the receiver A/D converter, PS TEST SELECT signal for the Interference Tag Processing function (Figure FO5-10, sheet 7), and the AGC COMP FACT SELECT A & B signals for the prescaler (sheet 1). These signals allow processing of test data in the HSP.

5-5.4.7.3 Test Generator Timing and Control. The test generator timing and control circuits (zone 8B) produce the test timing signals for the receiver and HSP Test Data Generation function. The outputs generated are read addresses, enabling signals, and clocks, which enable all of the test outputs in the HSP.

5-5.4.7.4 Test Bias Data. The capture I, Q, and log A/D converter bias data register file (zone 6B) receives the CI WR DATA, RGTR WR ADRS, write strobes, and timing signals from the test generator timing and control circuits and outputs the NORMAL BIAS DATA when not in test. This output is sent to the test bias data parallel-to-serial conversion circuits (zone 5B), where it is converted to SERIAL A/D CONVERTER TEST/BIAS DATA/CLK signals and then sent to the receiver. During the test mode, the bias data register file is tri-stated and effectively produces no output. This happens upon receipt of the BIAS FILE OUTPUT ENBL signal. The deselect gate grounds the 4 least significant bits (LSBs) during test. Test bias data is output from the test

generator memory circuits (zone 6B) and sent to the test bias data parallel-to-serial conversion circuits which then outputs the SERIAL A/D CONVERTER TEST BIAS DATA and CLK signals to the receiver.

5-5.4.7.5 I, Q, and Log Test Video. The test word demultiplexer (zone 5B) is loaded with test data in parallel form and demultiplexed on command from the test word strobes from the test generator timing and control circuits. The data is then sent to the parallel-to-serial conversion circuits (zone 4B), where it is converted into serial format. The I, Q, and LOG SERIAL TEST VIDEO signals are then sent to the prescaler to test the signal processor during the performance of the off-line diagnostic (RDASOT).

5-5.4.7.6 AGC and Interference Test Data. Part of the test data output of the test word DEMUX is also sent to the AGC and interference test data output registers. This part of the data word contains the AGC and the interference test tags. These signals are stored in the register on command from the PRESCALER DATA PARALLEL LOAD signal which is one of the test word strobes. The TEST AGC POSITION data is dumped onto the AGC test command bus and sent to the prescaler. The TEST INTERFERENCE TAG signal is sent to the Interference Tag Processing function.

5-5.4.8 Receiver Control Data Generation. The Receiver Control Data Generation function (sheet 6) generates the receiver clocks which are dumped onto the receiver control word select clock bus and sent to the Selection and Control Data DEMUX in the receiver. Also sent to the receiver is the receiver control data. The RECEIVER STATUS DATA DOWNLOAD TIMING signal from the receiver interface write data control and timing logic (zone 9A) is sent to the Receiver Status Monitor function in the receiver. The receiver control word (and phase control data) is generated in the capture receiver control word logic circuits and phase control memory. This word is generated as a result of the CI WR DATA, write strobes, and RGTR WR ADRS from the timing circuits. The RCVR CTRL DATA & CLKS output is via the receiver control data output register (zone 6A). Timing and control signals are input into the Receiver Control Data Generation function at the receiver interface write data control and timing logic and capture phase control base address and address counter control signal register file. The CLR and INCREMENT ADRS CNTR signals and AGC TEST SELECT signal is output from the register file. The phase control memory outputs the PHASE CTRL DATA when enabled by the PC MEM OUTPUT ENBL signal.

5-5.4.9 Interference Tag Processing. The Interference Tag Processing function (Figure FO5-10, sheet 7) contains the interference tag test/norm select multiplexer and tag delay shift register, interference tag counter and output register, and clutter filter output registers. The INTRF DETECTION FLAG input from the receiver Interference Detection function (zone 5B) and the PS TEST SELECT and TEST INTRF TAG signals from the Receiver and HSP Test Data Generation function are held at the test/normal selection multiplexer input. The PS TEST SELECT input allows selection of raw or test data. This selected data is sent to a shift register along with the INTRF SUPPRESSION ENABLE signal from the HSP Timing and Control function (sheet 3). It is here that the interference tag outputs are generated and sent to the clutter filters.

5-5.4.10 HSP and Receiver Status Data Collection. The HSP and Receiver Status Data Collection function (Figure FO5-10, sheet 8) receives the monitored outputs of notch width data, I, Q, and log data, prescaler data, clutter filter data, synchronizer control signals, receiver status data from the receiver, parity alarms, and control and timing signals from throughout the HSP. The

monitored test data is applied to the appropriate test and output data registers (zone 5A, 5B). The test data selection control signal generator (zone 6A) outputs enabling signals for the test and output registers and the SYNCHRONIZER TEST SEL 1 input to the generate test latch gate (zone 6B). The capture snap range count register files, and range and PRT counters (zone 7B) also provide inputs to the generate test latch gate. The LATCH ENABLE outputs are sent to the appropriate test and output data registers when the inputs to the generate test latch gate are equal. This output latches the data into the test and output data registers. When enabled, the test and output data registers send the selected MONITORED HSP DATA AND CTRL SIGNALS to the monitored HSP data and control signal output gate. This data is sent to the PSP as PSP INPUT DATA. Included in the PSP INPUT DATA output are: End of Test (EOT) data, Clutter Filter Parity Errors (if a parity alarm was generated), PRT Length Data, and Parallel RCVR Status Data. The RF/IF test monitor timing and logic circuits provide the TEST MONITORING TIMING signals for the Receiver Status Monitoring function. In the archive I CH 2 data latch and parallel-to-serial converter circuits (P/O CIC (A5), zone 3A) the I, Q, and Prescaler CH 2 Output Data is converted to serial format and sent to the RDADP for archiving.

5-5.5 ON-LINE PERFORMANCE CHECKS.

On-line performance checks are performed during radial processing and during startup, full restart, or fast startup. If a signal processor system (SPS) input/output (I/O) error occurs, SPS I/O STATUS ERROR (462), an occurrence type error, is set. If three SPS I/O errors occur within a 5-minute period, the MULT SPS I/O ERROR - RDA FORCED TO STBY, an occurrence alarm, is set. The RDA state is forced to standby when this occurs. In the event a hardwired signal processor destination 7 loopback test fails during radial cut processing, the HWSP END AROUND TEST ERROR (589) alarm is generated. This is an edge detected alarm which forces the Maintenance Mandatory, RCVR-Signal Processor mode.

5-5.5.1 Checks During Radial Processing. In addition to the calibration checks and associated alarms explained in paragraph 5-4.9 , the signal processor system (SPS) consisting of the HSP, the PSP, and associated application software programs, monitors the following (i.e., during volume scan), on-line test data while radial processing is in progress. If data exceeds threshold values, the associated alarms are set.

| Test Data | Alarms |
|---|---|
| AU and Clutter Filter Memory Parity<br>- A parity check is maintained as radial data is processed | AUØ PARITY ERROR (587) (refer to note below)<br>AU1 PARITY ERROR (583) (refer to note below)<br>AU2 PARITY ERROR (584) (refer to note below)<br>CLUTTER FILTER PARITY ERROR (588) |
| Read not complete | SPS READ TIMING ERROR (580) |
| Write not complete | SPS WRITE TIMING ERROR (581) |
| PRT 1 and 2 Intervals<br>- Checks intervals of both possible pulse repetition intervals | PRT1 INTERVAL ERROR (381)<br>PRT2 INTERVAL ERROR (382) |
| HSP End Around<br>- Check validity of date transmission from SPS to RDASC. | SPS HSP LOOP TEST ERROR (665) |
| Interference Detection Tag Count<br>- Explained in para. 5-4.9 | ISU PERFORMANCE DEGRADED (522) |

**NOTE**

An occasional AU Parity Error does not noticeably degrade the quality of the WSR-88D product. Therefore, AU Parity Error alarms occurring at a rate of about 1 per hour or less per board, based on a 24-hour average, can be ignored and no action is necessary. Boards that generate greater alarm rates should be replaced.

5-5.5.2 Checks During Startup, Full Restart, and Fast Startup. The PSP initialization routine initialize AU memory and AU tables. Coefficient memory data is downloaded from the RDASC computer to the PSP memories. Check sum tests are performed to verify the download operation. If any failures occur during the SPS download process, the following alarms could occur:

| ALARM | TYPE |
|---|---|
| SPS MEMORY CLEAR ERROR (590) | OC |
| SPS MICRO/ECW FILE READ ERROR (591) | OC |
| SPS MICRO/ECW VERIFY ERROR (592) | OC |
| SPS COEFFICIENT RAM LOAD ERROR (593) | OC |
| SPS AU RAM LOAD ERROR (595) | OC |
| SPS CLOCK/MICRO P SET ERROR (603) | OC |
| SPS HARDWARE INIT SELECT ERROR (667) | OC |

As part of startup or full restart, in addition to the SPS download process, the SMI bus loop test, DIM mode loop test, and HSP loop test are performed. These tests could result in the following alarms:

| ALARM | TYPE |
|---|---|
| SPS DIM LOOP TEST ERROR (661) | OC |
| SPS SIM LOOP TEST ERROR (662) | OC |
| SPS RTD LOOP TEST ERROR (664) | OC |
| SPS HSP LOOP TEST ERROR (665) | OC |

During fast startup, only the SMI and DIM loop tests are performed.

If any of these errors occur during the SPS initialization sequence, the SPS INITIALIZATION ERROR (451) alarm is also set. It is an edge detected alarm, which forces the RDA INOP state.

### 5-5.6 OFF-LINE DIAGNOSTIC TESTS.

The HSP off-line diagnostic tests in RDASOT are intended to isolate faults within the hardwired signal processor. The specific subtests are described in NWS EHB 6-510-2, RDASOT User's Guide, and are utilized in the Primary and Secondary Fault Isolation, Sections 6-3 and 6-4 of this manual.

# Section 5-6. Programmable Signal Processor (PSP) Functional Block Diagram Description

## 5-6.1 INTRODUCTION.

This section discusses the WSR-88D PSP at the functional block diagram level. Throughout this section, refer to Figure FO5-11. The programmable signal processor interfaces with the RDASC processor and the HSP. Its task, in conjunction with the HSP, is to convert coherent phase detected radar data to base data weather products of reflectivity, velocity, and spectrum width. Physically, the PSP consists of five functions, as follows:

- Input Signal Selection and Distribution (ISSD)
- Arithmetic Unit (AU)
- Arithmetic Control Unit (ACU)
- Input-Output Controller (IOC)
- Standard Maintenance Interfaces (SMI)

The functions above are discussed in paragraphs 5-6.5 through 5-6.9. An overview, PSP functions, and timing of the PSP are discussed in paragraphs 5-6.2 through 5-6.4, respectively.

**NOTE**

This section refers to the RDADP as UD5, the Receiver as UD4, the Transmitter as UD3, and the Waveguide Pressurization Unit as UD6. Unless otherwise specified, the information also applies to redundant systems UD105, UD104, UD103, and UD106.

## 5-6.2 PSP OVERVIEW.

The programmable signal processor, along with the hardwired signal processor, the RDASC processor, and the two RDA application programs, CPCI01 (RDA Status and Control Program), and CPCI02 (Signal Processing Program) form the signal processor system as illustrated in Figure 5-12. The signal processor performs its task of converting the radar data output of the receiver (I, Q, and log) into base weather data (reflectivity, velocity, and spectrum width) by executing the functions and subfunctions of the signal processor program as listed in Table 5-11. The functions which are performed by the Signal Processing Program, CPCI02 are:

| Function | Description |
|---|---|
| 1 | Process Surveillance Time Series Inputs |
| 2 | Process Range Ambiguous Doppler Time Series Inputs |
| 3 | Process Doppler Time Series Inputs |
| 4 | Process Batch Time Series Inputs |

| Function | Description |
|---|---|
| 5 | Measure Bias and Noise Power Inputs |
| 6 | Measure Gain and Balance |
| 7 | Collect Input Data |
| 8 | Initialize PSP |

As shown in Table 5-11, some of the 19 subfunctions, or tasks, are performed for all of the functions (i.e., Report PSP Status) while other tasks are performed for only one of the functions (i.e., Compute Fundamental Fourier Coefficients task for the Measure Gain and Balance function).

5-6.2.1 RDA Calibration and On-Line Performance Monitoring. The signal processor performs the following functions used in the system on-line calibration routine described in Section 5-4.9 :

- Measure Bias and Noise Power Inputs (CPCI02 Function 5)
- Measure Gain and Balance (CPCI02 Function 6)
- Collect Input Data (CPCI02 Function 7)

The calibration process is performed on power-up and between elevation cuts as explained in Section 5-4.9 .

5-6.2.2 Contiguous Surveillance Cut Processing. The term “cut processing” refers to that processing which occurs while the antenna is maintained at a specific elevation and rotated through $360^{\circ}$ of azimuth. The technique of employing different pulse repetition intervals (PRI) optimizes the collection of either surveillance or Doppler data. Contiguous surveillance cuts are designed to provide good reflectivity estimates at low elevation layers where good clutter filtering is essential and where long ambiguous range is required. The signal processor arrays contiguous surveillance cut processing mode generates both the surveillance reflectivity and echo power arrays in reflectivity (dBz) with 1km granularity. Both data are sent to the RDASC processor every one degree. The surveillance echo power arrays are stored in the RDASC processor for an entire elevation layer scan and then are sent back to CPCI02 radial-by-radial, while CPCI02 processes the same or an adjacent elevation layer with contiguous Doppler waveforms. The signal processor employs the surveillance echo power arrays to resolve range ambiguities in the Doppler data.

5-6.2.3 Contiguous Doppler Without Range Ambiguity Resolution Cut Processing. A contiguous Doppler cut is employed to provide Doppler reflectivity, velocity, and spectral width arrays at high elevations where the Doppler cut data is range unambiguous. The signal processor contiguous Doppler data processing mode provides the Doppler base data listed above with 250m granularity.

Table 5-11. Signal Processing Program (CPCI 02) Functions vs. Subfunctions

| SUBFUNCTIONS | FUNCTIONS: PROCESS TIME SERIES SURVEILLANCE INPUTS | PROCESS TIME SERIES RANGE AMBIGUOUS DOPPLER INPUTS | PROCESS SERIES DOPPLER TIME INPUTS | PROCESS SERIES BATCH TIME INPUTS | MEASURE POWER BIAS AND NOISE INPUTS | MEASURE GAIN AND BALANCE | COLLECT INPUT DATA | INITIALIZE PSP |
|---|---|---|---|---|---|---|---|---|
| 1 PERFORM MATCHED FILTERING AND ACCUMULATE POWER SERVES | X | X | X | X | | | | |
| 2 CENSOR STRONG POINT CLUTTER | X | X | X | X | | | | |
| 3 COMPUTE ECHO POWER | X | | X | X | | | | |
| 4 DETERMINE CONTROL PARAMETERS | X | X | X | X | | | | |
| 5 COMPUTE REFLECTIVITY | X | | X | X | | | | |
| 6 COMPUTE DOPPLER VELOCITY | | X | X | X | | | | |
| 7 COMPUTE SPECTRUM WIDTH | | X | X | X | | | | |
| 8 COMPUTE BIAS AND NOISE POWER | | | | | X | | | |
| 9 COMPUTE FUNDAMENTAL FOURIER COEFFICIENTS | | | | | | X | | |
| 10 MOVE INPUT DATA | | | | | | | X | |
| 11 REPORT PSP STATUS | X | X | X | X | X | X | X | X |
| 12 GENERATE/UPDATE ISC CONTROL PARAMETER | X | X | X | X | X | X | X | X |
| 13 GENERATE/UPDATE MACROCODE | X | X | X | X | X | X | X | X |
| 14 GENERATE/UPDATE IOC CONTROL PARAMETER | X | X | X | X | X | X | X | X |
| 15 COMPUTE ADJUSTED NOISE | X | X | X | X | | | | X |
| 16 INITIALIZE AU MEMORY | | | | | | | | X |
| 17 INITIALIZE AU SCRATCHPAD MEMORY | | | | | | | | X |
| 18 LOAD AU TABLES | | | | | | | | X |
| 19 LOAD COEFFICIENT MEMORY | | | | | | | | X |

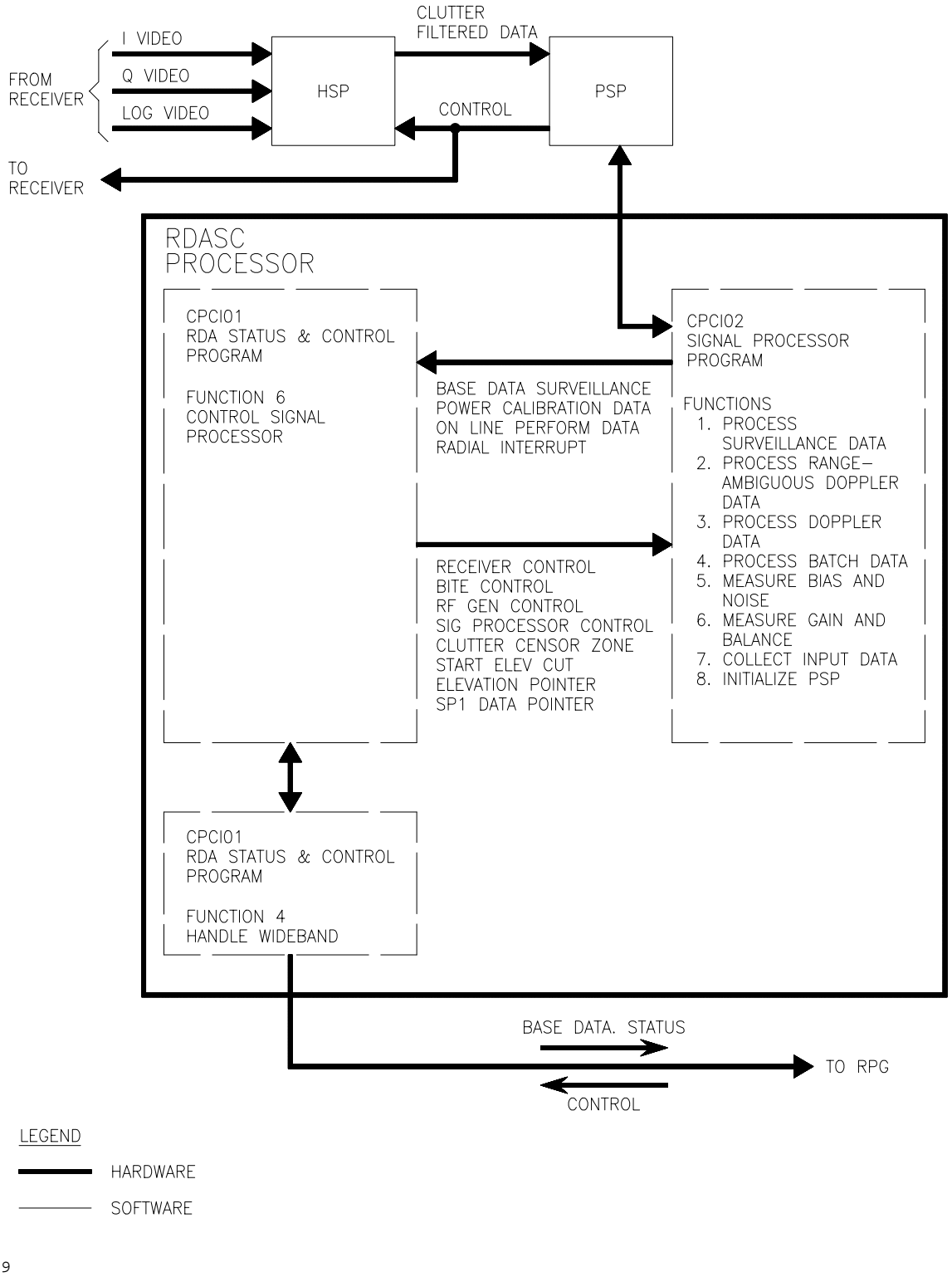


Figure 5-12. Signal Processor Block Diagram

5-6.2.4 Contiguous Doppler With Range Ambiguity Resolution Cut Processing. The contiguous Doppler cut is employed to provide Doppler reflectivity, velocity, and spectral width arrays at low elevation where good ground clutter filtering is required. This PSP processing mode also provides the Doppler base data listed above with 250m granularity. On low elevation layers where the Doppler waveform is range ambiguous, range ambiguity resolution is required. Range ambiguity resolution employs the surveillance echo power array fed back to the PSP from the RDASC processor, radial-by-radial, during the Doppler processing of the same or an adjacent elevation layer.

5-6.2.5 Batch Cut Processing. Batch cut processing contains both surveillance and Doppler pulse trains within each one degree radial in order to make combined reflectivity and Doppler processing possible. Batch cut data are suitable for middle elevations where ground clutter filtering is not necessary, but Doppler cut data are range ambiguous. The batch cut processing mode provides surveillance reflectivity with 1km granularity and velocity and spectral width with 250m granularity. During batch processing, a mask input array is written into the PSP from the RDASC processor in order to effectively suppress some forms of processing beyond the surveillance cut unambiguous range. The length of the mask array in cells is equal to four times the maximum unambiguous range of the Doppler pulses in kilometers, with each cell representing one kilometer. The array is filled with 0.5 from the beginning of the array out to the maximum unambiguous range of the surveillance pulse, and is filled with 0.0's otherwise.

5-6.3 PSP FUNCTIONS.

The PSP (Figure FO5-11, sheets 1 and 2) consists of the ISSD, AU, ACU, IOC, and SMI functions.

5-6.3.1 Input Signal Selection and Distribution (ISSD) Function. The PSP provides the computer interface between the HSP and the RDASC processor. The input signal selection and distribution function (Figure FO5-11, sheet 1) receives data, control, and timing signals from the HSP. These include the master clock (4.8 MHz X8 Clock) and the Sweep-In-Progress (SIP) signal. The SIP signal indicates the validity of HSP clutter filter data received.

5-6.3.1.1 Real and Imaginary Clutter Filter. The ISSD function receives real and imaginary clutter filter data from the HSP and passes this data, virtually unchanged, through the surveillance data storage and distribution section to the AU memories. There are three identical AUs: AU 1, AU 2, and AU 3. The input signal conditioner (ISC) sends unchanged clutter filter data to the memory of each of these AUs via the ISC DATA OUT RE and IM (real and imaginary) bus. The ISC writes one-third of this data into each of the AU memories.

5-6.3.1.2 PSP/RDASC Data Transfer and Control Function. Data from the RDASC processor enters the PSP's PSP/RDASC data transfer and control function (Figure FO5-11, sheet 1) and are distributed to five destinations within the PSP. The surveillance data storage and distribution section is destination 4. It receives BFR WRITE DATA from the RDASC, which is supplementary data that the PSP inserts into the AU memories in range sample alignment with the clutter filter data. This data consists of the surveillance echo power array, that is fed back during Doppler waveform processing to enable range unfolding of Doppler data and the background threshold array which the PSP employs to tag data as having insufficient signal-to-background ratio. This data is also sent to the AU memories via the ISC DATA OUT RE and IM bus.

5-6.3.1.3 AU Memory Addresses. The AU memory addresses to which the ISC DATA OUT RE and IM bus is written are generated in the ISSD from data supplied by the RDASC. This RDASC data is sent via the BFR WRITE ADDRESS bus to the ISSC control and parameter storage section, which is destination 5.

5-6.3.2 Arithmetic Unit Function. The internal logic of AU1, AU2, and AU3 are identical. Only AU1 is shown in detail on sheet 1; AU2 and AU3 are shown as blocks. The AU memory consists of three banks. Two banks serve as the ping-pong memory into which ISC DATA OUT RE and IM data is written. The third bank serves as the scratch-pad memory, used to temporarily store internal AU calculations.

5-6.3.2.1 Multiplier/Accumulator Function. Calculations are performed in the multiplier/accumulator function. Data input to the multiplier/accumulator can come directly from the AU memory or can be fed back from the output of the accumulator during a recursive mathematical operation. Selection is performed in the multiplier/accumulator input data selection circuit. This circuit can also reconfigure data to perform complex math (for example, real data must be added to real data and imaginary data must be added to imaginary data for addition of two complex numbers).

5-6.3.2.2 Data Selection and Special Function Logic. The output data selection and special function logic determines where the multiplier/accumulator output data will be sent. It can be stored in the AU's scratch-pad memory, fed back to the multiplier/accumulator via the input data selection circuit, or sent to the memory of the PSP-RDASC Data Transfer and Control function.

5-6.3.2.3 Status Flags. Status flags from the multiplier/accumulator are input into the multiplier/accumulator calculation status selection and testing circuit. This circuit examines these status flags, determining if any are active. If a flag is active, this circuit outputs CONDITION TRUE to the AU conditional activate/deactivate (CAD) circuit. The CAD circuit determines the next state of the AU, whether it is no change, conditional activate, conditional deactivate, or toggle.

5-6.3.3 Arithmetic Control Unit (ACU). The ACU is a bit-slice computer that receives macrocode from the RDASC processor and translates it into the microinstructions, clocks, control signals, data, and addresses that control operation of the AUs and the ACU itself. The system clock generator (Figure FO5-11, sheet 2, zone 7A) houses an oscillator that generates a 30 nsec master clock signal. This signal can be divided by 5, 6, 7, or 8, resulting in a single system clock that is output at four different phases.

The four different system clocks (see Figure FO5-11, sheet 11, zone 9A) are sent to the bit-slice ALU, the real-time clock, the ACU2 micro-sequencer, memory address generator, ACU1 bus interface unit, arithmetic units, AU clock and trigger generation, IOC output memory, and IOC read/write control.

5-6.3.3.1 Macrocodes. Macrocode from the RDASC are sent via the BFR WRITE DATA bus to the ACUs macrocode storage section (Figure FO5-11, sheet 2), which is destination 1. The macrocode is sent via a bidirectional internal ACU destination bus, DEST BUS, to an emulation control word (ECW) RAM in the microinstruction subroutine address generation section. Macrocode-to-microcode translation is performed here. An address supplied by the macrocode is sent via the NEXT ADRS BUS to the active microinstruction program storage and step sequencing

section. In this section resides an ACU write control store RAM and an AU write control store RAM. These RAMs contain microcode that has been downloaded from the RDASC during system initialization. The NEXT ADRS BUS selects a particular microcode block to be executed. The macrocode thereby controls the sequencing of microinstruction executions.

5-6.3.3.2 Downloading of Microinstructions. Downloading of the microinstructions is a multistep process. First, they are downloaded from the RDASC to the PSP-RDASC data transfer and control interface. Second, they are sent to the PSP diagnostic interface where they are loaded onto the SMI BUS IN, and input into the ACU diagnostic interface and download sequencer. Third, these microinstructions are sent DIAG SERIAL DATA IN bus to the writable non-destructive microinstruction storage and download control section. The final download path is from this section to the ACU via the ACU MICRO INSTR RGTR SERIAL DATA OUT bus.

5-6.3.3.3 RALU. The bit-slice register arithmetic logic unit (RALU) performs the arithmetic and logic operations required by the ACU. It takes in data from the SOURCE BUS and outputs data on the DEST BUS. The RALU source bus select circuitry determines which ACU function's output is accepted by the RALU via the SOURCE BUS. Selection depends on the condition of the RALU STATUS signal. RALU output data is sent via the DEST BUS to the AU multiplier/accumulator coefficient data generation circuit. Coefficient data is used during certain calculations in the AUs multiplier/accumulator. The COEFFICIENT DATA signal is received in the AU by the microinstruction interface, a set of registers. These registers also route microinstructions and AU memory addresses received from the ACU.

5-6.3.4 IOC Function. This function receives data from the RDASC processor and distributes it to one of five destinations within the PSP; this function also controls the output of data to the RDASC, sends interrupts to the RDASC after completion of designated tasks, continuously updates PSP status, and supports the PSP diagnostics interface.

5-6.3.4.1 Control Commands and Write Data. The RDASC sends control commands and write data to the PSP via the RDASC to PSP COM CTRL bus (Figure FO5-11, sheet 2). The read/write control circuitry outputs this data on the RDASC TO PSP DATA bus. The RDASC TO PSP WRITE CTRLS are decoded to determine which one of five possible destinations within the PSP the RDASC TO PSP DATA is to be sent. The data is output on the BFR WRITE DATA bus to the desired destination. This function contains an output memory and a status memory (Figure FO5-11, sheet 1):

- Output memory is loaded with PSP-developed data that is to be output to the RDASC
- Status memory is an auxiliary memory that is used to manipulate the output memory so that output data can be unfolded

Data can be output from the output memory with a one-to-one unfolding, a four-to-one unfolding, or no unfolding at all (in which case, data is read out sequentially in the order it was stored). Data stored in the output memory normally comes from one of the three AUs. Selection is performed in the output memory write data select circuit. It is also possible to load the output memory with data from the ACU's DEST BUS.

5-6.3.5 Standard Maintenance Interface (SMI). The SMI function (Figure FO5-11, sheet 2) contains a diagnostic interface for each of the four major functions of the PSP. The four functions are:

- ISSD
- ACU
- AUs (each AU has its down diagnostic interface)
- IOC

5-6.3.5.1 PSP Diagnostic Interface. The PSP diagnostic interface also provides a non-diagnostic service by serving as a channel through which the RDASC downloads microinstructions to the ACU upon system initialization. Further information on the ACU is in paragraph 5-6.7 of this section.

5-6.3.5.2 RDASC-PSP Diagnostic Interface. The RDASC-PSP diagnostic interface communicates with each individual function diagnostic interface via the SMI bus. The RDASC sends diagnostic test controls and force data to the RDASC-PSP diagnostic interface. This data is routed to the specific function interface via the SMI BUS IN. The selected interface then injects this test data into specific circuitry within its respective function. Outputs caused by this test data are sampled and output back to the RDASC via the SMI BUS OUT.

## 5-6.4 PSP TIMING.

This section provides a description of how the RDASC and PSP function within the RDA equipment for the major base data generation functions; i.e., surveillance, Doppler, Doppler with range ambiguity resolution, and batch. The following paragraphs provide systems information that makes the detailed functional requirements of the RDASC and PSP more easily understood. From a broad point of view, the major timing events are power turn-on (or reinitialization), elevation layer start and stop, and one-degree radials. The RDASC processor will communicate with the PSP for each of these events as outlined below:

5-6.4.1 Power Turn-On (Reinitialization). During system initialization, the RDASC downloads PSP microcode and parameters required (coefficient memory and AU tables) for PSP operation.

5-6.4.2 Elevation Layer. Certain PSP parameters remain fixed for an entire elevation layer. One example is the AGC attenuator calibration data (required by the clutter filter). This data is sent to the PSP between elevation layers and is not double buffered in the PSP since the real-time constraint is not stringent. The macrocode and PSP parameters required for the first radial are automatically downloaded.

5-6.4.3 One-Degree Radials. The PSP generates interrupts on the borders of one-degree radials which synchronize the RDASC processor to the radar. The RDASC processor raises the antenna position and base data upon receiving the interrupt and then sends the PSP macrocode and PSP data required to process the next radial. The SP double buffers all such data to provide a large time window for the transfers while meeting the real-time constraints. The RDASC processor

indirectly controls the one-degree radial extent by telling the synchronizer the pulse(s) and number of pulse(s) per radial, and by controlling the antenna rotation rate. The synchronizer generates the A/D clocks, pulse triggers, and radial clocks which are employed by the PSP to generate the radial interrupts.

5-6.4.4 Steady State Base Data Generation. This paragraph describes steady state operation of the PSP within the RDA subsystem while generating base data in any of the functions described. See Figure 5-13 for the basic timing diagram. The description below is number coded to that figure.

1. Transmitter pulses. The transmitter generates a pulse train pattern which repeats every one-degree radial. For contiguous waveforms, the pulses are equally spaced. For batch waveforms, the first few pulses of the one-degree radial are surveillance waveforms and the remaining pulses are Doppler waveforms.

2. The ISC writes time series data into PSP input memories. The receiver LIN and LOG channel data are sampled by the A/D converters, then processed by the interference suppression unit (can be bypassed), and ground clutter filters (can be bypassed), and then appropriate combinations of LIN and linearized LOG data are sent to the PSP Input Signal Selection and Distribution function which writes the data into PSP AU input memories. The input memories are dual banked. Each AU processes one side of the dual memory while the other side is being written into. Because of the finite size of the AU input memories, each one-degree radial is subdivided into two or more input memory blocks (two are shown in Figure 5-13, line 2). At the end of each block, the input memories are toggled to make the other side available to the AUs and to provide memory to write into. The PSP design requires that all but the first input block of a one-degree radial is identical. The first block may contain a different number of pulses and may contain surveillance and Doppler waveforms as required by batch waveforms.

3. The ISC writes supplemental data into memories. Contiguous Doppler waveforms and batch waveforms all require supplemental data in the form of radial arrays from the RDASC processor on every degree radial. Operation (3) moves the supplemental data array from the input signal selection and distribution buffer to the AU input memories.

4. The synchronization toggles PSP input memories. The toggle pulses make available the just written data to the AUs and also tell the ACU to process the data.

5. The PSP reads and processes time series data. One-degree power sums and, where applicable, pulse pair sums are computed. This is done for each input memory block of data. Note that this operation starts when the PSP toggles the command buffer holding the macrocode.

6. The PSP reads supplemental data, if any, computes base data, and writes base data in output memory. This operation follows the last time series summation (5).

7. The PSP toggles command buffer banks. This operation makes the macrocode for the next one-degree radial available to the ACU. Note that the toggle occurs immediately after the base data is written in output memory (6).

8. The PSP toggles output memory banks and interrupts RDASC processor. This operation makes a one-degree radial of data available to the RDASC processor and is the precise time marker required to compute the antenna azimuth corresponding to the base data.

9. The RDASC processor writes macrocode to PSP command buffer (a dual memory) and supplemental input data, if any, into Input Signal Selection and Distribution input buffer (a single memory). This occurs immediately after interrupt and must finish within first PSP input memory block.

10. The RDASC processor writes control parameters and clutter maps to the various HSP destinations. This provides control over the various HSP functions as described in paragraph 5-5.4.1 .

11. The RDASC processor writes output memory read control parameters to the IOC. These parameters include the number of bytes to read and the starting addresses to read from in order to read the base data into the RDASC from the PSP output memory.

12. The RDASC processor reads the base data from the PSP output memory. Note that the base data read must be complete before the next radial interrupt.

Figure 5-14 expands the timing diagram of Figure 5-13 and shows the general case of K PSP input memory blocks (2).

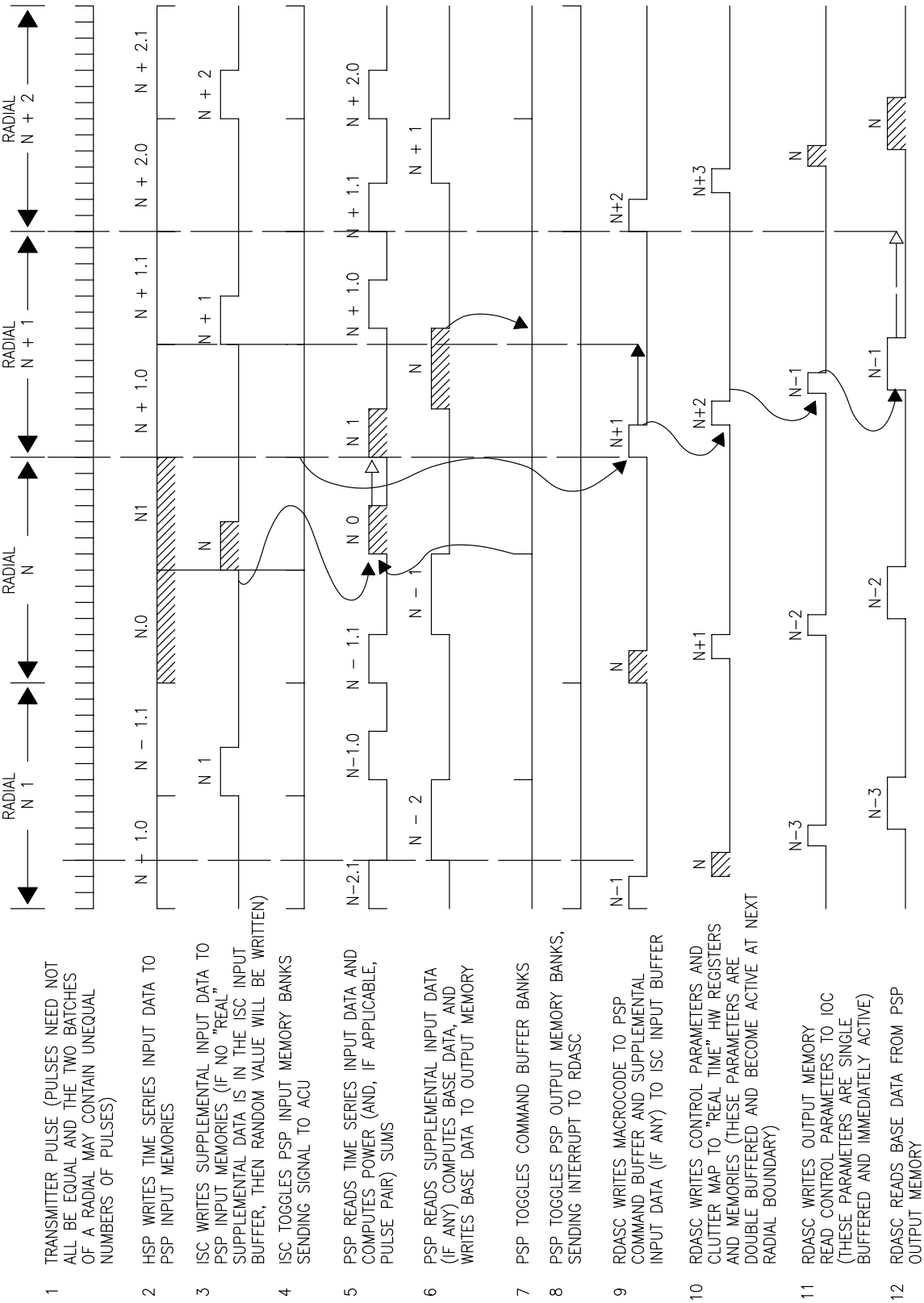


Figure 5-13. Basic Timing Diagram

5-6.4.5 Elevation Layer Startup. The RDASC processor starts an elevation layer (see Figure 5-15) by sending startup macrocode to the PSP (9), the HSP control parameters (10), and then a start code on the I/O command lines and a command line pulse (in RDASC processor context). The synchronizator then causes the transmitter to transmit (1), toggles the input memories (4), and toggles the output memory and generates an interrupt (7), thereby causing normal steady state operation to commence. The first valid output data is available two radials later (12, labeled radial 1).

5-6.4.6 Elevation Layer Stop. The RDASC processor stops an elevation layer, (see Figure 5-16) by sending halt macrocode to the PSP (9) and a halt command to the HSP (10). The PSP generates the output memory toggle and interrupt (8) coincident with the command buffer toggle (7) rather than waiting for the next radial boundary which would occur in steady state operation, but does not exist when the elevation layer is halted. Refer to Section 5-6.4.4 .

## 5-6.5 INPUT SIGNAL SELECTION AND DISTRIBUTION.

The Input Signal Selection and Distribution function, consists principally of the ISC, Figure FO5-11, sheets 3 and 4), receives in-phase I and Q clutter filter digital video from the HSP and passes it to the memories of three AUs. The ISC writes one-third of this data into each of the three memories. The ISC Memory Address Generator function enables the selection of memory addresses to which data is written. Only portions of each of the three AU memories are used for clutter filtered data. The other locations within these memories are used as scratch pad memories for the AUs themselves. The ACU generates the memory addresses for scratch pad use. The surveillance data storage and distribution function of the ISC uses the clutter filter data to generate two half-word, odd parity bits. These bits are combined with the clutter filter data sent to the AU memories.

5-6.5.1 ISC Control and Parameter Storage. Six control and timing signals from the HSP are received by tri-state buffers in the ISC Control and Parameter Storage section (Figure FO5-11, sheet 3, zone 8B). The CH 1 WORKING and CH 2 WORKING signals facilitate dual-channel operation with the signal that is high indicating the operative channel. In a single-channel configuration, channel 2 is the only operative channel. CH 2 WORKING is high; CH 1 WORKING is not connected.

5-6.5.1.1 SIP Signal. The sweep-in-progress (SIP) signal from the HSP Synchronizer, UD5A10A4, indicates that the clutter filter is outputting valid data. The ISC begins routing input data after receiving the SIP signal. The SIP signal is sent to the ISC timing and control circuits, as DIAG/NORM SIP, where it is used to divide the DIAG/NORM X8 CLK signal into a DIVIDE-BY-2 CLK, a DIVIDE-BY-4 CLK, and a DIVIDE-BY-8 CLK signal. These clocks are used to generate the input signal conditioner (ISC) write clock (ISC WR CLK). The DIVIDE-BY-8 CLK signal is applied as the clock to the address counter. The frequency of this clock is such that the address counter is clocked once for every range cell.

5-6.5.1.2 AU Wrap-Around Signal. The AU WRAP AROUND signal (zone 8B) causes the ISC to return AU selection to the starting AU. If the AU WRAP AROUND signal is not received when the maximum range cells per AU count is reached while writing to the last AU, ISC timing stops. Timing begins again when the AU WRAP AROUND signal is received or if the SIP signal

goes low and a new sweep starts. The DIAG/NORM SIP signal's falling edge clocks the sweep counter (zone 5AB). This counter is used to determine when the maximum sweeps per block is reached. When that level is reached, the ISC toggles the AU input memories (via the AU BANK SELECT signal) and clears the ISC address counter and registers. The AU memory select logic (zone 5A) sends an enable signal to one of the three AU memories in sequential order, returning to AU1 after AU3 has been written to.

5-6.5.1.3 Range Cell Counter. The range cell counter (zone 7B) counts the ÷8 CLK. The AT MAX RNG CELL PER AU signal is low for the entire range cell, and goes high when the maximum range cell count is reached. The range cell counter is reloaded with the RNG CELL PER AU parameter whenever the LD ADRS & RNG CELL CNTRS signal is active. This signal is active whenever the DIAG/NORM SIP signal is inactive, or the DIAG/NORM AU WRAP signal is active, or the AT MAX RNG CELL PER AU signal is active.

5-6.5.1.4 ISC Parameter Storage. The ISC parameter storage section (zone 7A) accepts buffered write data (BFR WR DATA) and the buffered write address (BFR WR ADRS) from the RDASC processor via the IOC controller. During diagnostic mode, diagnostic write data and a diagnostic write address are entered instead. The AU write pulse is generated once every range cell.

5-6.5.2 ISC Memory Address Generation. The starting address at which data is written into an AU is sent via the LD NEXT AU START ADRS signal to the store AU start address register (Figure FO5-11, sheet 4, zone 5B). This data is loaded into the address counter. The address counter starts at zero and counts up once every range cell. When the maximum range cell per AU is reached, the last address written to is stored in the store new sweep start address register. The starting address for the next AU is fed to the store AU start address register and loaded into the address counter on the next address clock. After a writing cycle is complete and the first AU is again selected (AU = starting AU), the address stored in the store new sweep start address register, which corresponds to the last address written to in the first AU, is increased by one and sent to the store AU start address register. This process is triggered by reception of the AU WRAP AROUND signal or the SIP signal going low. The address counter can also be loaded by the diagnostic bus (refer to diagnostic functional description).

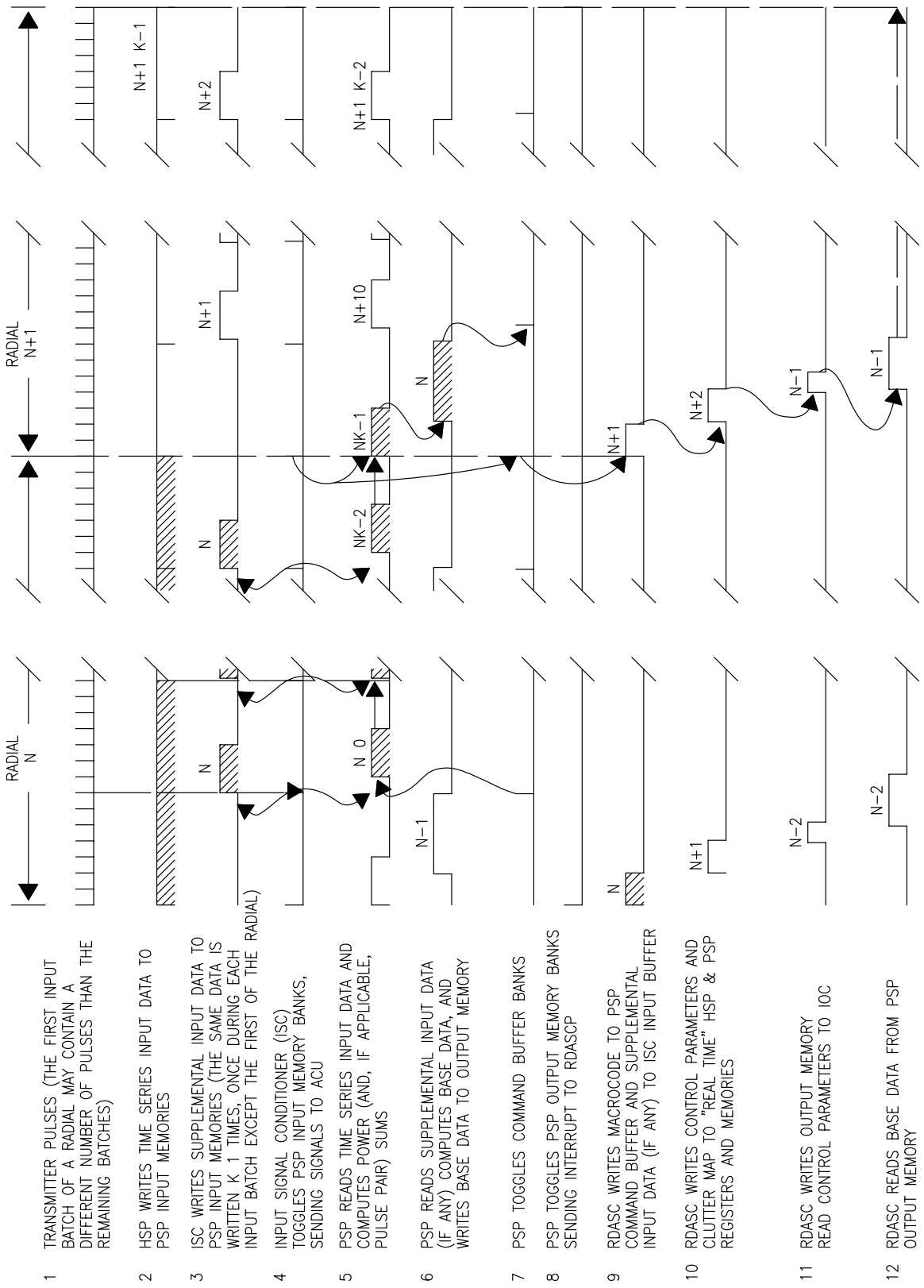


Figure 5-14. Expanded Timing Diagram

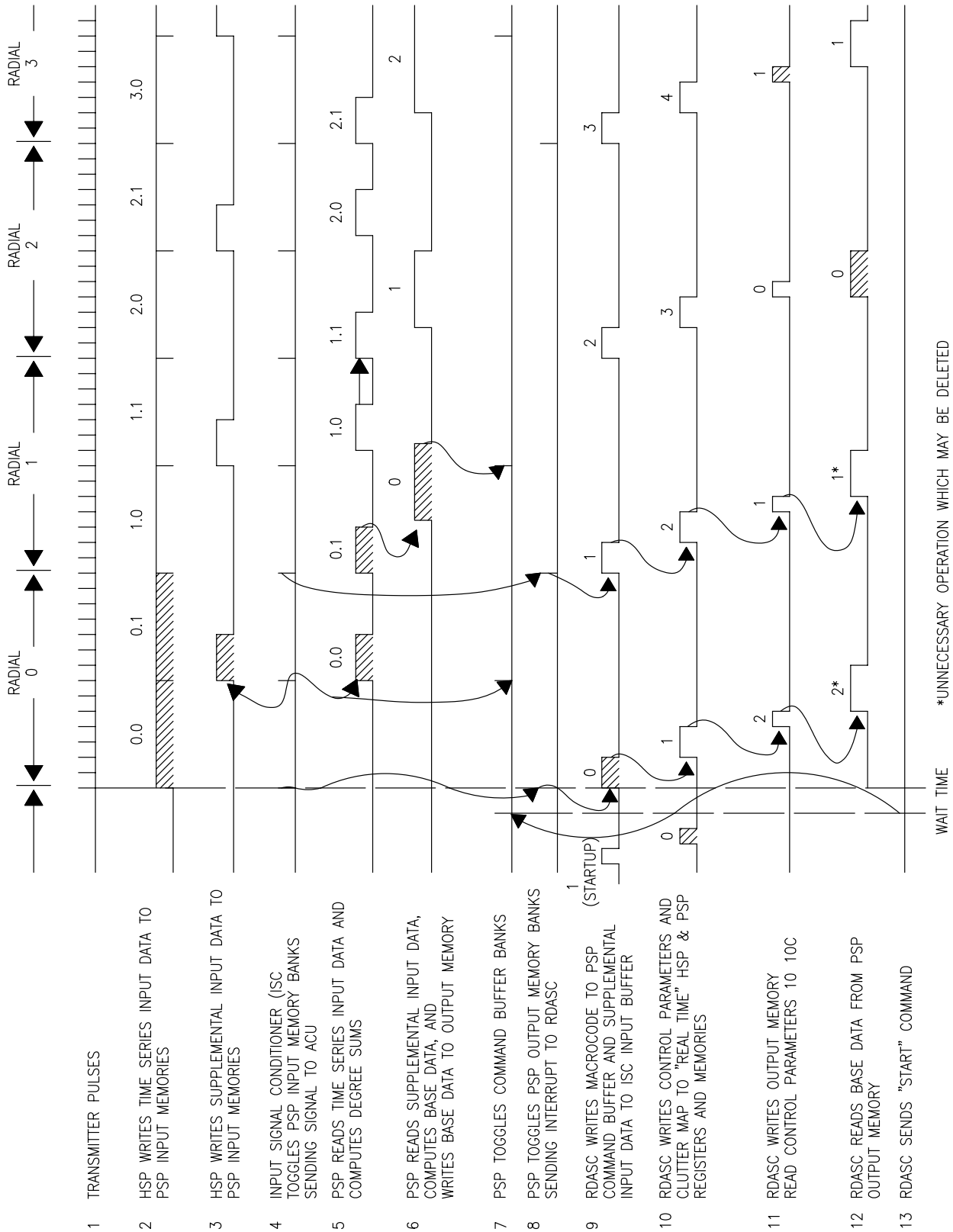


Figure 5-15. Elevation Layer Startup

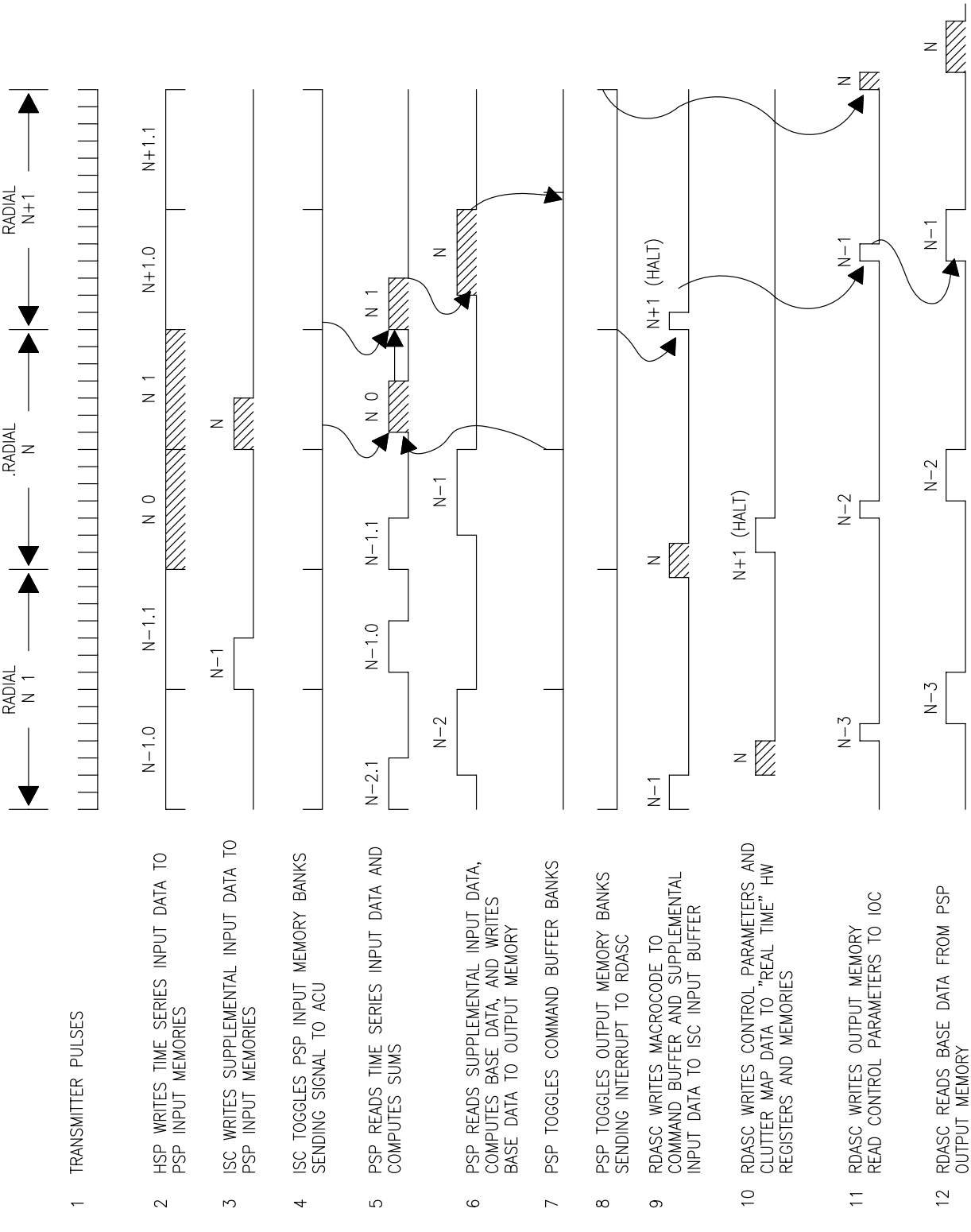


Figure 5-16. Elevation Layer Stop

5-6.5.3 ISC Data Storage and Distribution. The ISC generates the data ISC DATA RE & IM signals (Figure FO5-11, sheet 4, zone 2A) as input to the ping-pong/scratch-pad memory of all arithmetic units (shown for AU1, UD5A9A8, sheet 5). ISC DATA RE & IM consists of two parts, data values and associated parity. The data portion of ISC DATA RE & IM (called ISC DATA RE & IM NO PARITY sheet 4, zone 3A) is selected by the ISC from three sources: clutter filter (CF) data from the HSP clutter map/filter output assembly (sheet 4, zone 9A), SMI generated DIAG FORCE CF DATA RE & IM (sheet 17, zone 2A), or SURVEILLANCE DATA (sheet 4, zone 4A). The odd parity bits, one for the real and one for the imaginary portion of ISC DATA RE & IM NO PARITY are generated by the parity generator (sheet 4, zone 3A) and are linked together with ISC DATA RE & IM NO PARITY to form the signals ISC DATA RE & IM.

The clutter filter (CF) data is selected onto the ISC DATA RE & IM NO PARITY bus by the signals ENBL CH 1 and ENBL CH 2 (Figure FO5-11, sheet 3, zone 5A). This CF data includes clutter filter I and Q, clutter filter I/LOG, and clutter filter Q/LOG. When CF data is selected onto the ISC DATA RE & IM NO PARITY bus, the CF DATA RE bus is selected onto the real portion and CF DATA IM bus is selected onto the imaginary portion.

Supplementary surveillance and composite reflectivity data can also be selected onto the ISC DATA RE & IM NO PARITY bus. Supplementary data is supplied to the ISC by the RDASC processor via the IOC controller and is stored in the surveillance RAM (zone 5A). The ISC then interleaves (in time) the supplementary data with the clutter filter data as it is written into the ping-pong/scratch-pad memory of the AUs. The RDASC is allowed to write the surveillance memory in the first block of sweeps after a degree radial. On all subsequent blocks of sweeps, the surveillance memory is read by the ISC to provide data to the AUs ping-pong/scratch-pad memories. The diagnostic/normal multiplexer (zone 6A) creates the signal RAM ENBL that selects whether the IOC or the ISC has access to the surveillance memory. When not in diagnostic mode, the signal 1ST BLOCK OF SWEEPS is used to form RAM ENBL, otherwise SEL RAM ADRS CNTR, which is set by the SMI logic, is used. The IOC writes surveillance RAM at the address BFR WR ADRS with the data provided on BFR WR DATA bus when the SURV WR ENBL (WR SURV RAM) and EXT WR PLS signals are active. The surveillance read address counter provides the surveillance RAM address when the ISC is reading the surveillance RAM. It is initialized by the signal CLR SWP & ADRS CNTR which clears it. The surveillance read address counter is incremented on the rising edge of the DIAG/NORM 8X CLK signal whenever the ENBL SURV ADRS CNTR signal is active.

5-6.5.4 ISC Interrupt Generation. The ISC controls toggling of the AU input memory banks and PSP output memory banks located in the IOC. Each one-degree radial of data input into the AU memory is divided into blocks. Each block consists of a predetermined amount of sweeps. The AU memory bank selection control logic and sweep counter (bank 1 or 2). It outputs the P/P ARITH U INPUT MEM signal after counting to a sweep number corresponding to a full block of data. The P/P ARITH U INPUT MEM signal clocks a flip-flop (Figure FO5-11, sheet 4, zone 3A) to output the INPUT BANK TGL REQ signal handled by the ACU interrupt circuitry. The ACU toggles the AU memory banks so that the bank just written to can be read and the other bank becomes available for the next block of input data. The DEG RADIAL signal received by the PSP from the HSP (sheet 3, zone 8B) is the precise time marker required to compute the antenna azimuth corresponding to base data generated by the PSP. This command is sent, as NORM/DIAG DEG RAD, to a flip-flop (sheet 4, zone 3A) in the ISC interrupt generation circuitry. It allows the flip-flop to output an

active OUTPUT BANK TGL REQ signal to the ACU interrupt circuitry. The ACU toggles the PSP output memory (sheet 4, zone 5B), making a one-degree radial of data available to the RDASC processor.

5-6.6 ARITHMETIC UNIT (AU).

AU1, AU2, and AU3 have identical internal logic. Figure FO5-11, sheet 8 shows the PSP interconnections for all three AUs. Sheets 5 through 7 show internal logic for AU1; internal logic for AU2 and AU3 are the same and, therefore, are not shown. The following discussion only references AU1 but also applies to AU2 and AU3. The AU1 memory receives clutter filter data from the HSP via the ISC, parity bits generated in the ISC, a data bus from the output selector, an address from the ISC, and an address from the multiplier/accumulator.

5-6.6.1 Memory Generation Control. The AU1 input memory (Figure FO5-11, sheet 5, zones 4A, 4B) is organized into three banks of 16K words of 38-bits, including two bits of parity. One bank, memory bank 0, is used as the scratch pad memory. The other two banks, memory banks 1 and 2, are used as the ping-pong input memory. While one bank of the ping-pong memory is accessed by the AU, the other is accessed by the ISC, and vice-versa. The scratch pad memory bank is always addressed by the AU and is available to the input multiplexers for processing.

5-6.6.1.1 AU Configuration Switches. The AU configuration switches (zone 9B) are set in the **UP** position to select memory banks 1 and 2 as the ping-pong input memory and bank 0 as the AU scratch pad memory. (Capabilities exist for all three memory banks to be used as scratch pad memory. To enable this configuration, the configuration switches are all thrown to the **DOWN** position, enabling the MEM ALL SCRATCH PAD signal.) The ISC MEM ENBL 1 signal controls the ping-pong operation. It is input along with the three most significant bits (MSBs) of ISC MEM ADRS (15-17) and AU MEM ADRS (15-17) to two 2:1 multiplexers in the memory bank 1 and 2 enable source select circuitry.

5-6.6.1.2 MSB Address Bits. The three MSB address bits and enable signal for each memory bank are decoded in the address boundary decode circuit (zone 8B). Each memory can be accessed on any one of 16K address boundaries from 0K to 128K. The memory bank enable signals for the three banks are output to the respective bank in the ping-pong/scratch pad input memory. For writing to the scratch pad, the ARITH U WR UPPER ENBL and ARITH U WR LOWER ENBL signals from the output selector circuit (Figure FO5-11, sheet 6, zone 2B) are latched through the memory output enable logic (sheet 5, zone 6B) when the MEM BANK 0 ENBL signal is active. They enable writing to the upper or lower half of bank 0.

5-6.6.2 Ping-Pong/Scratch Pad Memory. The scratch pad memory, bank 0, is written to by the AU output selector (Figure FO5-11, sheet 6, zone 2A). Halfword and fullword writes to specific memory locations are controlled by the ARITH U WR UPPER ENBL and LOWER ENBL signals. The data is read in via the MEM DATA OUT bus. The ARITH U WR UPPER ENBL signal is high for a writing of data to the upper 19-bits (18 thru 37) of bank 0. The ARITH U WR LOWER ENBL signal is high for a writing of data to the lower 19-bits (0 thru 17) of bank 0. If both enable signals are high, a write is done to both halves of bank 0, which is a fullword write. The AU write enable signals are processed in the AU memory generation control circuit and applied to bank 0's write gate (Figure FO5-11, sheet 5, zone 4A). The AU MEM DATA OUT bus is temporarily stored in this

gate and written into bank 0's upper or lower gate at a location specified by the AU MEM ADRS bus, after being sent in directly from the AU microinstruction interface (sheet 7, zone 3B).

5-6.6.2.1 Ping-Pong Input Memory. The ping-pong input memory addresses, banks 1 and 2, receives both the AU memory address and the ISC memory address. For bank 2, both are applied to the memory bank 2 address selection circuit (Figure FO5-11, sheet 5, zone 4B). With the SEL AU TO BANK 2 signal high, the circuit selects the AU MEM ADRS and sends it to the memory bank via the BANK 2 ADRS signal. With the SEL AU TO BANK 2 signal low, the ISC MEM ADRS is selected. The same logic applies for the memory bank 1 address selection circuit. The bank selected for use by the AU receives the AU MEM DATA OUT signal from the ping-pong commutator (via the BANK 2 WR DATA or BANK 1 WR DATA bus). This data is written into the selected address of the upper or lower half of the bank. The bank selected for use by the ISC receives the CF DATA OUT signal from the ping-pong commutator via the BANK 2 WR DATA or BANK 1 WR DATA bus. This data is written into the selected address of the upper or lower half of the bank. The bank selected for use by the ISC receives the CF DATA OUT signal from the ping-pong commutator and writes it into the selected address of its upper or lower bank.

5-6.6.2.2 Output Data Multiplexer. The output data multiplexer (zone 2B) selects AU input memory bank 1 or bank 2 if AU scratch pad memory has not been selected. The data is transferred to the output bus select logic for routing in the AU based on other fields in the microinstruction word. The transfer occurs when the microinstruction requires data from one of the AU memories as determined by the address. The address range for AU input memory and scratch pad memory are different.

5-6.6.3 AU Clock and Trigger Generation. The AU clock generation provides enable signals based on the input signals and the three phases of the PSP system clock, SYS CLK-1, -2, or -3. (See Figure FO5-11, sheet 6, zone 11A).

The input signals are as follows:

- DIAG SHIFT MICRO INSTR - specifies the shifting of the microinstruction register by one bit
- DIAG MICRO INSTR CLK - is an enable signal for the diagnostic register
- OPNL MODE - specifies whether the AUs are in diagnostic or op mode
- AU ACTIVE - specifies whether the AU is active or inactive

The output signals are as follows:

- ARITH U MICRO INSTR CLK - is an enable signal for events to occur in the AU
- ARITH U BUS ENBL - provides the enable signal to gate the X-bus or Y-bus data into the multiplier selector
- ARITH U WR CLK - provides the enable signal for the ISC to write data into the AU input memory
- ARITH U RGTR CLK - is one of two signals necessary to enable the AU file input select

5-6.6.4 Multiplier/Accumulator Input Data Selection. Data read out of the AU memory, AU1 MEM DATA IN, and data that is the result of AU calculations, RESULT BUS RE & IM, are each inputted into one port of the two-port file input select circuitry (Figure FO5-11, sheet 6, zone 10A). Selection between the two ports is determined by the least significant bit (LSB) of the file control (FCO) field of the microinstruction bus.

5-6.6.4.1 Selected Data. Selected data is read into one of two files, A or B, of the two-port memory file (zone 9A). The four-bit file A address (FA 0-3) and file-B address (FB 0-3) fields of the microinstruction bus determine which file is written into the X bus and Y bus multiplier input selection circuitry. The file A bus is also sent to the memory data out bus configuration select circuitry (zone 2A) for direct inputting into the AU memory. The writing operation is enabled when the FC 1 bit is high. The data is written in at a rate determined by the ARITH U RGTR CLK.

5-6.6.4.2 XS Field. The XS field of the microinstruction bus selects one of the following to be loaded onto the X MULT BUS RE and IM: COEFFICIENT DATA, +1, MEM DATA IN, RESULT BUS RE and IM, or FILE A RE and IM. In addition, the MEM DATA IN bus and FILE A RE and IM bus can be loaded onto the X MULT BUS RE and IM directly or with their real and imaginary parts swapped (for example, FILE A RE onto X MULT BUS IM and FILE A IM onto X MULT BUS RE). Similarly, the YS field selects one of the following onto the Y MULT BUS RE and IM: COEFFICIENT DATA, +1, MEM DATA IN, RESULT BUS RE and IM, or FILE B RE and IM. The MEM DATA IN bus and the FILE A RE and IM bus can also both be loaded onto the Y MULT BUS RE and IM directly or with their real and imaginary parts swapped.

5-6.6.5 Multiplier/Accumulator Function. Each multiplier/accumulator card (Figure FO5-11, sheet 6, zone 7A) contains two floating-point multipliers, two floating-point accumulators, and two multiplier-bypass multiplexers. One multiplier-accumulator-multiplexer combination works on real data while the other works on imaginary data. Both real and imaginary data have a 16-bit two's-complement significant and a 6-bit two's-complement exponent.

5-6.6.5.1 MULT RE Signal. One multiplier accepts data from the X and Y real buses, X and Y MULT BUS RE, and generates the product of the two, MULT RE. The MULT RE signal is sent to the floating point accumulator real via the PRODUCT BUS RE. A sample of PRODUCT BUS RE is sent to the diagnostic section. Similarly, the other multiplexer accepts data from the X and Y imaginary buses and sends the product of the two (MULT IM) to its associated floating point accumulator via the PRODUCT BUS IM bus. A sample of this bus is also sent to the diagnostic section.

5-6.6.5.2 Multiplier Load Control Code. Each multiplier contains input latches that are enabled by multiplier load control code (MLD) that is part of the microinstruction field generated in the ACU. The MLD control is as follows:

MLD bits 3 and 2:

ØØ = bypass multiplier
Ø1 = load real multiplier
1Ø = load imaginary multiplier
11 = load real, imaginary multiplier.

bit 1:

Ø = no load from X bus
1 = load X bus value.

bit Ø:

Ø = no load from Y bus
1 = load Y bus value.

The upper two bits, 3 and 2, determine whether a multiplier gets loaded. The lower two bits, 1 and Ø, select whether the X bus and the Y bus will be loaded into respective registers within each multiplier.

5-6.6.5.3 Input Registers. The input registers feed data to actual multiplier circuitry within the multiplier. Bits 6-17 of the X bus, representing its 12-bit mantissa, are multiplied by bits 6-17 of the Y bus, its mantissa. The 6-bit exponents of each bus, bits 0-5, are both sign extended to eight bits and added together.

5-6.6.5.4 Multiplier Output Latches. A one is also added to the exponent to compensate for the one place right shift output adjustment done by the fixed point multiply. This un-normalized product is latched by the multiplier output latches. The multiplier output latches feed the normalization and error limiting circuitry. The normalization circuitry consists of a shift calculation circuity, mantissa shift network, and exponent adjustment. The shift calculation circuit looks at the three MSBs of the mantissa to determine the number of places to shift the mantissa left to yield a normalized value. The shift calculator generated a two-bit value indicating the number of places to shift. The shift calculator output is used directly by the mantissa shift network, which shifts the mantissa to the desired number of places and the exponent adjuster. If ones are appended to the shift calculator output, it is obvious that, if the value is interpreted as a 2's complement number, it is equal to - (number of places to shift) +1. Therefore, all that must be done to properly adjust the exponent is to take the un-normalized exponent, add the 1's extended shift calculator output, and add 1.

5-6.6.5.5 Error Detection Circuitry. Error detection circuitry within the multiplier outputs multiplier status data to the MAC calculation result status selection and testing circuitry (zone 5B). The status data consists of bits that are error flags in which a mantissa of zero value is detected, or when the exponent is in an underflow or overflow condition. For a zero mantissa, the multiplier output is hard limited to a hexadecimal value of 0000 for the mantissa and 20 for the exponent (0000.20). This same value is output if an exponent underflow is detected. If an exponent overflow is detected, the multiplier output is hard limited to a maximum positive (7FFF.1F) or negative (8000.1F) number based on the mantissa's sign.

5-6.6.5.6 Multiplier Bypass Mode. For MLD bits 3 and 2 equal to 00, multiplier bypass mode is initiated. The multiplier outputs a code on the BYPASS CTRL signal that switches the input allowed to pass through the multiplier bypass multiplexer. Under multiplier bypass, the X and Y multiplier buses directly feed through to the product bus and are input into the accumulator. Under multiplier bypass, bits 2-17 of the X bus map directly onto bits 6-12 of the product bus, forming the product bus' mantissa, and bits 12-17 of the Y bus map directly onto bits 0-5 of the product bus, forming its exponent.

5-6.6.5.7 Floating-Point Accumulator. Each floating-point accumulator accepts two 22-bit floating point numbers sent in sequentially via the respective product bus. One is loaded into an A register and the next into a B register within each accumulator. The accumulator performs arithmetic operations such as add, subtract, normalize, and denormalize on these two numbers. Each accumulator is controlled by accumulator control commands sent from the ACU via the ARITH U2 MICRO INSTR bus. These microinstruction commands consist of the following:

5-6.6.5.7.1 AF - Accumulator Function. The AF command consists of five bits, 0-4. The AF command bits are decoded as follows:

- AF bit 4 - I2 to both real and imaginary accumulators
- AF bits 3 and 2 - I1 and I0 to real accumulator
- AF bits 1 and 0 - I1 and I0 to imaginary accumulator

5-6.6.5.7.2 ALD - Accumulator Load. The ALD command consists of three bits, 0-2. Bit 2 determines whether the accumulator for real data is loaded; bit 1 determines whether the accumulator for imaginary data is loaded, and bit 0 determines whether input data is loaded into the A latch or the B latch within each accumulator.

5-6.6.5.7.3 AC - Accumulator Control and FT - Feed Through Enable. The AC and FT commands control other modes of the accumulator, such as pipeline mode. In pipeline mode an internal register is made transparent, increasing accumulator speed. Error detection circuits within the accumulator output an error flag if the following is computed: a zero mantissa, mantissa overflow, exponent overflow, and exponent underflow. These flags are sent to the MAC calculation result status selection and testing section via the MULT/ACCUM STATUS DATA bus.

5-6.6.6 Multiplier/Accumulator Calculation (MAC) Result Status Selection and Testing. Status compute circuitry (Figure FO5-11, sheet 6, zone 6B) receives multiplier and accumulator status flags, as well as a sample of the accumulator output, ACCUM BUS RE and IM. This circuitry computes arithmetic status of the accumulator output, determining whether its real and imaginary parts are both less than zero, both equal to zero, equal to each other, or the real part is greater than the imaginary part. An exception bit is generated if any of the multiplier or accumulator status flags are high.

5-6.6.6.1 MAC Status. The select MAC status or XBUS circuit (zone 5B) performs a two-to-one multiplexing. It receives at one input a bus containing the multiplier status flag, accumulator status flag, accumulator output arithmetic status, and exception signals. It receives at the other input the 16 most significant bits (MSBs) of the XMULT BUS RE. The LD STATUS LATCH FROM X BUS signal, decoded from the microinstruction bus, selects which bus to map onto the STATUS FLAG BUS.

5-6.6.6.2 Activate/Deactivate Function. As a preliminary test for the conditional activate/deactivate function, a status bit is selected and compared to a test status bit signal to determine whether a particular AU, in this case AU1, will be activated or deactivated. Status bit select circuitry multiplexes one status flag bit to the SBUT output signal, as determined by the 4-bit code on COND 0-3, which feeds directly off the microinstruction bus. The SBUT signal is compared to the COND4 (test status) bit. If they match, the result of the status bit true/false test is

condition true. The AU is activated or deactivated depending upon whether the conditional activate or deactivate command is selected. If the test result is condition false, the AU is unaffected.

5-6.6.7 AU Conditional Activate/Deactivate Function. The conditional activate/deactivate (CAD) 0, 1 bits of the ARITH U3 MICRO INSTR determine the next state of the AU: no change, conditional activate, conditional deactivate, or toggle. The conditional activate and conditional deactivate states are implemented when the CONDITION TRUE signal is high, signifying a true result in the status bit true/false test. Commands to activate or deactivate the AU, ARITH U ACTIVE and ARITH U DEACTIVE, are sent to the ACU which, in turn, controls the AU memories. The toggle command changes the state of the AU based on the most recent AU state stored in the deactivate (D) CAD stack or activate (A) CAD stack. The CAD stacks record the current AU state as active or inactive and the state of the AU in the next cycle. The ST field controls the operation of the stacks, push or pop. When selected, the toggle signal commands the following:

- AU is activated if it was previously active but deactivated at the time of the push
- AU is deactivated if it was previously active and stayed activate at the time of the push
- AU remains inactive if it was inactive at the time of the push

5-6.6.8 AU Output Data Selection and Special Function Logic. The output data selection circuitry (Figure FO5-11, sheet 6, zone 2A) controls reading and writing from and to the AU's respective memory, as determined by the 5-bit memory control (MC) 0-4 field of the microinstruction bus. During reading mode, data is read from one of three possible AU memories to the multiplier/accumulator input data selection section via the AU1 MEM DATA IN bus. During writing mode, the output data selection circuitry receives multiplier/accumulator result data, status information, and diagnostic force signals that it writes into its associated memory card and IOC memory. The two LSBs of the MC field, MC 0-1, selects memory data is read out of. The three MSBs of the MC field, MC 2-4, control the writing operation. This MC field is decoded in the memory data out bus configuration select circuitry, resulting in a SELECTION CONTROL signal that selects, but does not enable, one of the following data to be output on the MEM DATA OUT IM and RE buses and sent to the AU memory:

- RESULT BUS RE and IM
- FILE A BUS RE and IM
- RESULT BUS RE, double precision
- RESULT BUS IM, double precision

The MC field can select a fullword write of either the 36-bit RESULT BUS or the 36-bit FILE A BUS. The 18-bit real part of the selected bus, containing a 12-bit significant and a 6-bit exponent, is transferred to the AU via the MEM DATA OUT RE bus and the 18-bit imaginary part is transferred via the MEM DATA OUT IM bus (zone 2A). The MC field can also select a halfword write of the RESULT BUS RE, the RESULT BUS IM, the FILE A BUS RE, or the FILE A BUS IM. The selected 18-bit halfword is split into its exponent and significant. The 6-bit exponent is loaded into bits 12-17 (zone 2A) of the MEM DATA OUT RE bus (zeroes are loaded into bits

0-11). The 12-bit significant is expanded to 16 bits and loaded into bits 20-35 of the MEM DATA OUT IM bus (zeroes are loaded into bits -18 and -19).

5-6.6.8.1 Odd Parity. Odd parity is computed on halfwords. This parity is checked on a memory read. If either half of memory has bad parity, the parity error flip-flop is set and remains set until cleared by the TA field. Bad parity on either halfword can be forced on memory writes by the TA field (for diagnostic purposes).

5-6.6.8.2 Write Mode. Conditional write mode enables data to be written to selected AUs. It is activated when the CONDITION TRUE signal is high, signifying a true result in the status bit true/false test (zone 4B). The MC field enables a condition fullword write of the RESULT BUS or the FILE A BUS onto the MEM DATA OUT RE and IM buses.

5-6.6.8.3 Result Bus IM. The RESULT BUS IM is the direct output of the summation in the accumulator (zone 5A) for imaginary floating-point data. A 'wired or' (zone 3A) allows force data from the diagnostic section, DIAG FORCE ACCUM BUS IM, to be input instead on the RESULT BUS IM bus when in diagnostic mode. The diagnostic section receives a sample of the RESULT BUS IM signal, ACCUM BUS DIAG SAMP, as feedback.

5-6.6.8.4 Result Bus RE. The RESULT BUS RE is a selection from among the following: the direct output of the summation in the accumulator for real floating-point data, the accumulator output manipulated by function PROMs, force real data from the diagnostic section, force data manipulated by the PROMs, and the output of the bit-set register (zone 3A). There are three function PROMs. The LOG PROM outputs the base-two logarithm of the accumulator output significant, the 1/X PROM outputs the reciprocal of the significant to enable division, and the SQRT PROM outputs the significant's square root.

5-6.6.8.5 Bit-Set Register. The bit-set register (zone 3A) is an 8-bit shift register that is serially shifted left one place per microinstruction. The new data shifted into the rightmost position is 1-bit of the STATUS FLAG BUS or its inverse. The bit-set register can also be loaded with the upper eight bits of the XMULT BUS RE. The register has two modes of operation: all eight bits can be shifted, one at a time, or just the lower four bits can be shifted, one at a time, leaving the upper four bits unchanged.

## 5-6.7 ARITHMETIC CONTROL UNIT (ACU).

The arithmetic control unit (ACU) is a bit-slice computer that generates the clocks, control signals, microinstructions, data, and addresses to control the AUs. The ACU performs the following tasks:

- Generates a four-phase clock by which both the ACU and AUs operate
- Receives macro-level instructions and parameters from the RDASC and translates them into corresponding microinstructions that are executed by the AUs and the ACU itself
- Supplies memory addresses to the AUs to access input, output, and scratch pad memories
- Supplies coefficient data used for complex computations by the AUs

5-6.7.1 Macrocode Storage. Macro-level instructions and parameters from the RDASC processor are received by the IOC and sent, virtually unchanged, to the macrocode storage section via the BFR WR DATA bus (Figure FO5-11, sheet 9, zone 4B). This data is input into one of two macro-command memory banks (zone 3A and 3B), which are ping-ponged so that, while one bank is read by the ACU, the other bank is written to by the RDASC processor via the IOC. The address of the selected memory bank into which the data is written is also sent from the RDASC processor via the IOC and received by the macrocode storage section via the BFR WR ADRS bus (zone 4A). The data and memory address are temporarily stored in commutators and sent to the selected memory bank based on macrocommand memory bank control logic (zone 5B).

5-6.7.1.1 Memory Toggling. When one memory bank is selected for writing or loading of data, the other is selected for reading data or executing macroinstructions. The toggling of these memories is commanded by an active (high) TGL CMD BANKS signal output from the ACU timing function (sheet 11). For example, with bank 1 (Figure FO5-11, sheet 9, zone 3B) selected for writing, the BANK 1 WR ENBL signal is high, enabling bank 1 to accept CMD BANK 1 DATA and to store it at locations specified by BANK 1 ADRS. The BANK 2 WR ENBL signal is low, enabling the data in bank 2 at the address specified by CMD BANK 2 ADRS to be read out on the BANK 2 MACRO CODE bus.

5-6.7.1.2 Macro Address Counter. The address for reading data out of a memory bank is generated in the macro address counter (zone 4A). This 8-bit binary counter receives a starting address from the DEST BUS when decoding of the DEST SEL 0-2 bus yields an active DEST=MACR ADR signal. The counter outputs an initial read address on the MACRO ADRS signal, and continues outputting read addresses as it counts up from the starting address. The INCRMT MACRO ADRS signal enables the counter to count up by one. The counter continues counting as long as INCRMT MACRO ADRS pulses continue to be supplied. The ACU MAST CLR signal clears the counter for the next reading operation.

5-6.7.2 Bit Slice Arithmetic Logic Unit. This function receives the macrocode commands via the SOURCE BUS (Figure FO5-11, sheet 11, zone 11B), performs the necessary arithmetic and logical operations in its bit-slice arithmetic logic unit, and outputs the results to all registers of the ACU via the DEST BUS. Only the register called out as the destination of a particular output is enabled to receive this data. There are five destinations. Macro Code Storage (sheet 9, zone 6B), Micro Program Address Generation (sheet 10, zone 11B), AU Memory Address Generator and Destination Decode (sheet 12, zone 8B), PSP Output and Status Data Memory Control (sheet 13, zone 8A), and PSP Output Data Storage (sheet 14, zone 10A). Four 4-bit ALUs, chained together by status shift control logic and a carry-look-ahead generator, comprise the 16-bit ALU. The SOURCE BUS is input from one of four sources: the ACU microsequencer (sheet 10, zone 2A), the memory address generator (sheet 12, zone 2A), the macrocode storage section (sheet 9, zone 1A), or the PSP output data storage section (sheet 14, zone 2A).

5-6.7.2.1 4-Bit ALU. Each 4-bit ALU (Figure FO5-11, sheet 11, zones 8B through 6B) consists of the following circuitry (see Figure 5-17): microinstruction decode RAM shift, Q shift, Q reg, and ALU source select blocks. 16 words comprising a random access memory, or files, of RAM for temporary storage of data; an ALU that can perform three binary arithmetic and five logic functions, and registers and multiplexers that route the selected data into the ALU. The internal RAM has two ports, A and B. Data on the SOURCE BUS is written into the ALUs RAM at

addresses supplied by the B FILE ADRS 0-3 bus. This data is channeled through the ALU and shifted into the RAM by the RAM shift register. Data stored in any of the 16 words of RAM is read out and manipulated in the ALU and Q register. The Q register is used primarily for multiplication and division routines. The data can be read from the internal RAM's A port as selected by the ALU A FILE ADRS 0-3 or from the B port as selected by the B FILE ADRS 0-3. The ALU INSTR 0-8 bus contains three fields of command. Bits 0-2 control the ALU source select circuit, which selects one of the following combinations as input to the ALU: AB, AD, AQ, AO, BD, BQ, BO, DQ, DO, and QO. Bits 3-5 select the function of the ALU (add, subtract, OR, AND EXOR). Bits 6-8 control the output (F) of the ALU, whether it is sent to internal registers or loaded onto the DEST BUS. The DEST BUS can also be loaded with data read directly from port A of the internal RAM.

5-6.7.2.2 Carry-Look-Ahead Generator. The carry-look-ahead generator (Figure FO5-11, sheet 11, zone 8A) links the four 4-bit ALUs by providing look-ahead over word lengths of more than four bits. It receives the CARRY PROPAGATE and CARRY GENERATE signals from an ALU and generates a CARRY signal to the ALU dealing with the next three MSBs of the SOURCE BUS. In this way the four 4-bit ALUs are chained into one 16-bit ALU.

5-6.7.2.3 Status Signals. Status signals (RESULT=0, CARRY OUT, NEGATIVE, and OVERFLOW) are output from the ALU operating on SOURCE BUS bits 12-13, which is the last ALU in the chain and, therefore, carries the status of the entire 16-bit ALU. These status bits are stored and tested in the status shift control logic. Twelve bits of the microinstruction, CTRL INSTR 0-9, 11, and 12, control latching of the status bits.

5-6.7.3 System Clock Generation. The programmable frequency divider (zone 10A) divides the 30 nsec master clock signal by 5, 6, 7, or 8, depending on two bits of the microinstruction bus, VARIABLE PERIOD SEL. This establishes for the PSP, the system clock that is output at four different phases, SYS CLK-0, SYS CLK-1, SYS CLK-2, and SYS CLK-3. The ACU clocks out its microinstruction on SYS CLK-0, which is at zero phase. The other clocks are used to do various writes to memory. The AU executes from its portion of the microinstruction on AU CLK-2. An ACU trigger decoder (zone 4B) decodes four bits of the microinstruction bus, TRIGGER SEL 0-3, to generate 16 triggers that are used throughout the ACU (Table 5-12). The selected triggers are pulsed out by SYS CLK-2.

The signals and their meanings are as follows:

- BREAK POINT MATCH stops the clock generation when the desired control store address is executed
- OPER MODE specifies to the clock generator that the PSP is in the run mode
- START/STEP specifies that one micro instruction is to be executed
- ACU MAST CLR specifies that operations are to be stopped
- SYS CLK ACTIVE specifies that clock signals are being generated

5-6.7.4 Active Micro Program Storage and Step Sequencer. This function (Figure FO5-11, sheet 10) generates the addresses necessary to sequence through the PSP's microinstruction set stored in the ACU write control store RAM (zone 4B) and the AU write control store RAM (zone

4A). Access and execution of the stored microinstructions are controlled by the microprogram controller (zone 6B). During each microinstruction cycle, the controller generates a 12-bit address, MICRO INSTR READ ADRS, that is used to read out microinstruction bits from the control store RAMs. The controller generates the 12-bit address from the NEXT ADRS BUS, which comes from one of three sources: the emulation control word (ECW) RAM, the pipeline select multiplexer, or the interrupt vector latch.

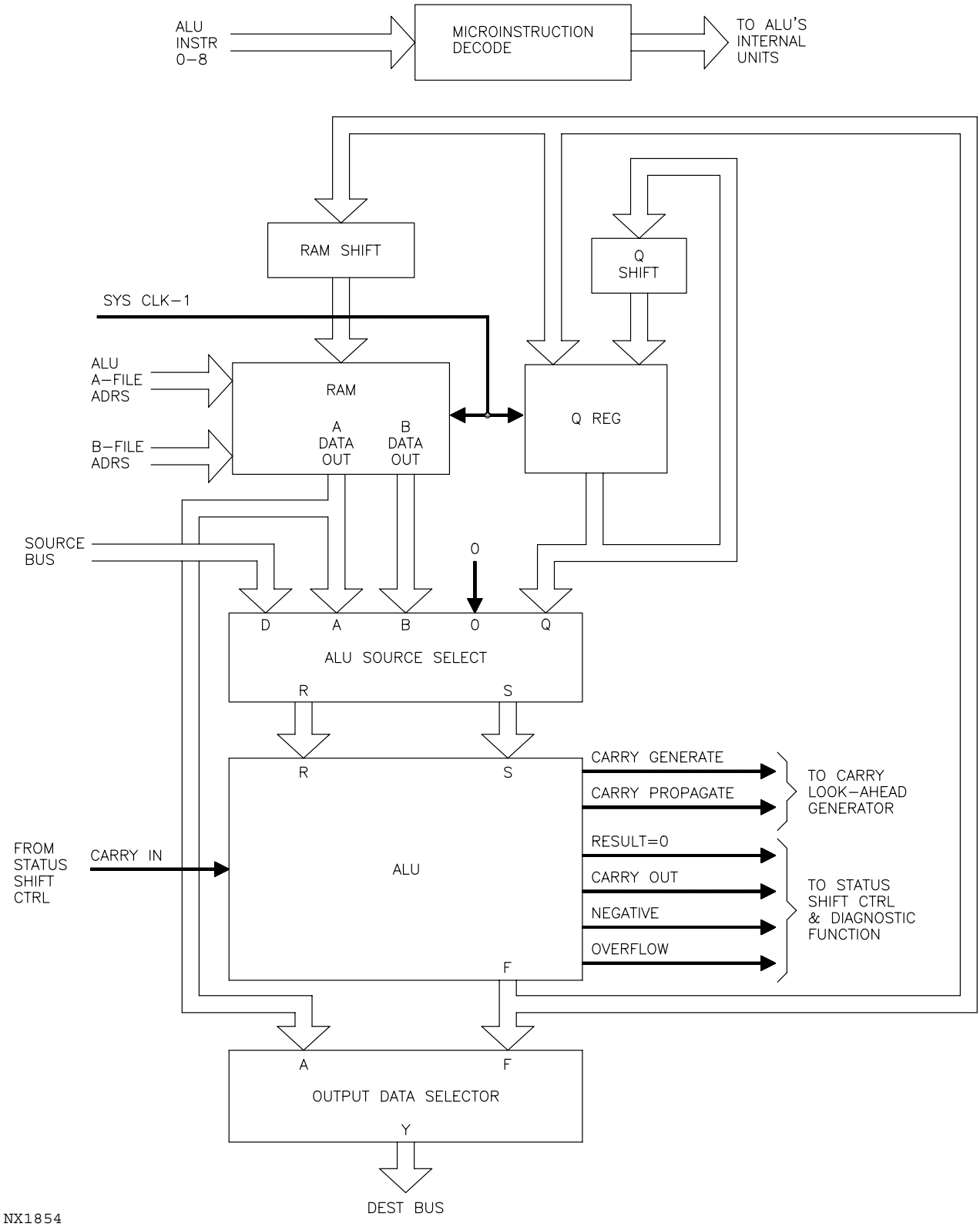


Figure 5-17. ALUs Internal Logic

Table 5-12. Trigger Selection

| TRIGGER SELECT 0-3 | Abbrev. | Function |
|---|---|---|
| 0000 | NOP | No Operation |
| 0001 | TIMA | Increment Macro Address |
| 0010 | TCB | Toggle Command Banks |
| 0011 | - | Unused |
| 0100 | TOB | Toggle Output Banks |
| 0101 | - | Unused |
| 0110 | TDCA | Decrement Coefficient Memory Address |
| 0111 | TICA | Increment Coefficient Memory Address |
| 1000 | TSR | Set Run Flip Flop |
| 1001 | TCR | Clear Run Flip Flop |
| 1010 | TCCR | Clear Command Bank Toggle Request |
| 1011 | TCC | Clear Real Time Clock (RTC) |
| 1100 | TSM | Enter Sine/Cosine Mode |
| 1101 | TCM | Enter Coefficient RAM Mode |
| 1110 | TCIR | Clear Toggle Input Bank Request |
| 1111 | TCOR | Clear Output Bank Toggle Request |

5-6.7.4.1 Microinstruction Bits. Four microinstruction bits, MICRO SEQ INSTR 0-3, feed back to control the microprogram controller. During power-up, all four MICRO SEQ INSTR bits are zero, causing the controller to output an address of all zeros. The command at address zero in the control store memory is always executed first after a power-up or master clear.

5-6.7.4.2 Microinstruction Address. The microinstruction address select logic (zone 5B) latches the addresses generated by the microprogram controller and acts as a buffer, supplying a microaddress into both control store RAMs. An active ENBL DIAG RGTR signal blocks the address supplied by the controller from being input into the control store RAMs. Instead, the MICRO ADRS that contains diagnostic or download information from the SMI is input.

5-6.7.5 Microprogram Address Generation. The ECW RAM (zone 8B) translates the macro commands that the PSP receives from the RDASC to the associated microcode stored in the control store RAMs. During system initialization, the ECW RAM is written to and loaded with macrocommands sent in on the DEST BUS. Data is clocked in at the rate and phase of SYS CLK-0. The macrocommands on the DEST BUS originate in the macro-command memory banks (Figure FO5-11, sheet 10, zone 4B). During system initialization, they are read out and sent to the bit slice ALU (sheet 11) via the SOURCE BUS, and then output from the ALU and placed on the DEST BUS. Writing of the DEST BUS into the RAM is enabled when the SEL MICRO SEQ AS DEST signal is active. This signal is decoded from the DEST SEL 3-5 bits of the microinstruction in the destination select decoder (zone 6A).

5-6.7.5.1 Command Register. The command register (zone 9B) acts as a pointer into the ECW RAM. The lower eight bits of this 16-bit register act as the ECW RAM's address bus. The register is enabled to receive the DEST BUS when decoding of the DEST SEL 0-2 bits of the microinstruction yields an active DEST = CMD RGTR signal. During a macrocode-to-microcode translation, a macrocommand in the command banks is transferred to the command register via the DEST BUS. This command is sent to the ECW RAM via the 8-bit MACRO CODE bus to select a location in the ECW RAM to be read out on the NEXT ADRS BUS. This is the starting address of the next group of microcode that is executed to complete the desired macrocommand.

5-6.7.5.2 Pipeline Select Multiplexer. The pipeline select multiplexer (zone 8B) drives the NEXT ADRS BUS when the microprogram controller is performing any one of a number of jump pipeline operations. The two-to-one multiplexer normally drives the JUMP ADRS 0-11 bits of the microinstruction presently being executed onto the NEXT ADRS BUS. The pipeline select multiplexer can also select the DEST BUS as input to the microprogram controller. This occurs when decoding of the DEST SEL 0-2 bits (zone 10B) results in an active DEST = RGTR CNTR signal. The DEST BUS is clocked into the pipeline select multiplexer at the rate and phase of SYS CLK-0.

5-6.7.5.3 Interrupt Sync Register. Eight possible interrupts enter the interrupt sync register (zone 9A). They are the toggle output bank request, toggle input bank request, toggle command bank request, write command banks, read mode, run mode, real-time clock full (RTC=0) and spare interrupt. These asynchronous interrupts are synchronized with the SYS CLK-0 and output on the SOURCE BUS when enabled by the SOURCE BUS SEL 0-2 code. An interrupt is active if it is at logical zero.

5-6.7.5.4 DEST BUS. To mask out certain interrupts that are not to be handled, the DEST BUS is loaded with an 8-bit signal that has a logical one in the positions of the interrupts to be masked. The hardware supports eight different interrupts, three of which are spares. The software design determines when the remaining five are to be enabled since not all interrupts are desirable at all times. The interrupt mask register (zone 9A) latches this data when the DEST = INTRP MASK RGTR signal is activated by a decoding of the DEST SEL 0-2 signal (zone 10B). The 8-bit INTRP MASK BITS bus is logically ORed with the 8-bit SYNCHED INTERRUPTS bus (zone 2A). During diagnostic mode, the DEST BUS is loaded with an 8-bit signal that simulates the interrupts. The diagnostic interrupt register (zone 9A) latches this data when the DEST = DIAG INTRP RGTR signal is activated by a decoding of the DEST SEL 0-2 signal. The ACU DIAG MODE signal disables the interrupt synch register and enables the diagnostic interrupt register.

5-6.7.5.5 Interrupt Vector Latch. The interrupt vector latch (zone 8A) is another source for the NEXT ADDRESS BUS. It is a 10-bit buffer that drives the NEXT ADDRESS BUS when the microprogram controller does a jump vector operation while testing for interrupts. This vector is clocked by the SYS CLK-0. The lower two bits of this latch's output are always logical zero. Bits 2, 3, and 4 are driven by a three-bit code (refer to Table 5-13) that corresponds to a single interrupt as the result of masking the other seven possible interrupts in the interrupt lockout logic. Bits 5 through 9 are set manually using the interrupt address switch (zone 8A) on the ACU-2 Microsequencer Card, UD5A9A5.

5-6.7.5.6 External Branch Select Multiplexer. The external branch condition select multiplexer receives 16 possible conditions via the CTRL INSTR 0-3 bus when the EXT JUMP CONDITION

signal is active. It selects one of these conditions, tests it, and outputs the JUMP COND MET signal so that the microcontroller can execute the appropriate jump. The appropriate jump is determined by the microcode when testing for a given branch condition. The branch conditions used are toggle input bank request and toggle output branch request. When the existence of a given branch condition is tested, the microcode will branch one way for its existence and another for its absence.

Table 5-13. Interrupt Assignments

| Code Interrupt | (Bits 2, 3, and 4) |
|---|---|
| Toggle Input Bank Request | 0 0 0 |
| Toggle Command Bank Request | 0 0 1 |
| Toggle Output Bank Request | 0 1 0 |
| Spare Interrupt 1 | 0 1 1 |
| Run Flip Flop Set | 1 0 0 |
| Spare Interrupt 2 | 1 0 1 |
| Spare Interrupt 3 | 1 1 0 |
| Real Time Clock Full | 1 1 1 |

5-6.7.5.7 Microinstruction Word Shadow Register. The 72-bit ACU microinstruction word shadow register is a combination of nine 8-bit serial shadow pipeline registers, (Figure FO5-11, sheet 10, zone 4B). It performs three main functions:

- Operates as normal pipeline registers latching the contents of the ACU write control store RAM block on every micro cycle
- Supports diagnostic testing and register inspect and change using the serial shadow register to shift in new data and extract old data
- Allows loading of control store RAM using the writable control store feature

The shadow register is serially loaded from the SMI bus with the word to be written into the control store. After the data is in the shadow register, it is gated into the control store memory at an address provided by the diagnostic register.

5-6.7.6 PSP Source/Destination Select Decodes. The bit-slice arithmetic logic unit receives the SOURCE BUS from five possible locations: the microsequencer, the bus interface unit (BIU), the registered arithmetic logic unit (RALU), the memory address generator, and the input-output controller (IOC). The microinstruction contains the information on which function is selected to output its SOURCE BUS to the ALU. SOURCE BUS SEL 3-5 bits of the microinstruction are decoded (Figure FO5-11, sheet 10, zone 6A) to activate one of five source enabling signals. The selected source enabling signal is output to its respective function when the OPER MODE signal is high (the OPER MODE signal is low when the system is in diagnostic mode). The bit-slice ALU outputs the DEST BUS to the five possible locations listed above. The microinstruction contains the information on which function is selected to receive the DEST BUS. Decoding of the DEST SEL 3-5 bits of the microinstruction activates one of five destination enabling signals.

5-6.7.7 Arithmetic Unit Memory Address Generator. This function (Figure FO5-11, sheet 12) formulates a new 16-bit memory address that is used by the AUs on every micro cycle. This address is input to the AU microinstruction interface (sheet 7, zone 3B) along with microinstruction bits 21-38.

5-6.7.7.1 SELECT MEM ADRS GEN AS DEST Signal. An active SELECT MEM ADRS GEN AS DEST signal enables decoding of the DEST SEL 0-2 bus (Figure FO5-11, sheet 12, zone 7B). Decoding of this bus enables a particular register within the AU memory address generator or the AU multiplier/accumulator coefficient data generator to receive data on the DEST BUS.

5-6.7.7.2 DEST = MEM ADRS RGTR FILE Signal. When the DEST = MEM ADRS RGTR FILE signal is active, the register file input data select allows the DEST BUS to feed memory address data to the memory address register file (zone 5B). Writing of data into this file is controlled by the memory address write (MAW) 0, 1 bits of the microinstruction bus. The memory address register file is a 4 x 16 RAM with read-while-write capability. It stores four AU memory addresses. These addresses select input, output, or scratch pad memory locations within the AUs. One of the four memory addresses is selected to be read by the memory address read (MAR) 0, 1 bits of the microinstruction. It is output on the 16-bit RGTR FILE OUTPUT DATA bus. This bus feeds back to add/subtract circuitry (zone 7B) that modifies the address and inputs it back into one of the four files in the memory address register file. The circuitry modifies the present address in one of the following ways:

- increments it by 1
- decrements it by 1
- increments it by 2
- decrements it by 2
- increments it by the value in the index register
- decrements it by the value in the index register

The index data register is a 16-bit register loaded by the DEST BUS when decoding of the DEST SEL 0-2 bus yields an active DEST = INDEX RGTR signal.

5-6.7.7.3 RGTR FILE OUTPUT DATA Bus. Bits 1-12 of the RGTR FILE OUTPUT DATA bus feed a mapping RAM that implements complex addressing schemes. These bits act as a virtual address that is mapped into a real address provided by the mapping RAM (zone 4B). When a complex addressing scheme is not required, the mapping RAM is bypassed. The ENBL MAPPING RAM bit of the microinstruction is sent in at logical 0. The mapping RAM is disabled by a logical 0 on the SELECT RAM MAP signal and bits 1-12 of the RGTR FILE OUTPUT DATA signal feed through the enabled bypass register.

5-6.7.7.4 Base Adder. The base adder (zone 3B) receives the upper three bits of the RGTR FILE OUTPUT DATA and the upper 11 bits of the mapped address (or bits 2-12 of the RGTR FILE OUTPUT DATA when in map-bypass mode). To these 14 bits it adds a 16-bit constant value, BASE RGTR A DATA, provided by the base register. The base register is loaded by the DEST BUS

when decoding of the DEST SEL 0-2 bus yields an active DEST = BASE RGTR signal. The 16-bit output of the base adder is combined with the two LSBs of the RGTR FILE OUTPUT DATA, forming the memory address sent to the AUs. The output register acts as a buffer for this data.

5-6.7.8 AU Multiplier/Accumulator Coefficient Data Generator. Coefficient data is generated to be used by the AUs on every microcycle. The coefficient memory address register (Figure FO5-11, sheet 12, zone 5A) is a 16-bit up/down counter that selects coefficient data, stored in the coefficient memory, to go to the AUs. The coefficient memory is a 4K x 22 RAM. The address register is loaded with a starting address of the coefficient memory by the DEST BUS when decoding of the DEST SEL 0-2 bits of the microinstruction (zone 7B) yields an active DEST = COEF ADRS CNTR signal. Once loaded, the address register may be incremented or decremented by the TRIG SEL 0-4 bits of the microinstruction bus. The coefficient memory outputs a 22-bit floating point value that is called out by the COEF MEMORY ADRS from the address register. The 22-bit value consists of a 6-bit exponent, COEF DATA EXP, and a 16-bit significant, COEF DATA SIG.

5-6.8 INPUT/OUTPUT CONTROLLER (IOC).

The IOC provides for input/output exchanges between the PSP, HSP, and the RDASC processor and returns the appropriate status and interrupts following the completion of such an exchange. Specifically, the IOC does the following:

5-6.8.1 Write Function. Supports a write function to transmit data from the RDASC processor to one of five destinations within the PSP.

5-6.8.2 Read Function. Supports a read function to access data from a 16K memory field comprised of output memory (radar data estimates), SMI memory, HSP memory, and a diagnostic digital interface monitor (DIM) register.

5-6.8.3 Generation of Interrupts. Supports the generation of interrupts to the RDA following the completion of designated tasks.

5-6.8.4 Continuous Updating. Supports the continuous updating of status dependent upon the present status of the PSP and IOC.

5-6.8.5 PSP and HSP Diagnostics. Supports PSP and HSP diagnostics with the use of an SMI.

5-6.8.6 RDASC Lead. The IOC follows the lead of the RDASC. Reinitialization of the IOC can be accomplished at any time by issuing a programmed clear from the IOC. Additional detail on the commands used to implement PSP, HSP, and RDASC interaction is described below:

5-6.8.6.1 PSPI/IOC CMD CODE Bus. The RDASC processor initiates all actions between the PSP-HSP and itself by issuing one of 16 possible commands on the PSPI/IOC CMD CODE bus (sheet 15, zone 9B). To issue a command, the PSPI card of the RDASC processor sends six command lines, PSPI TO IOC CMD 12-17, to the IOC followed by the application of the command, PSPI TO IOC CMD. Bits 16 and 17 are not used. On the trailing edge of PSPI TO IOC CMD, the command lines are valid and are latched by the IOC's differential receivers (zone 7B). These four lines, CMD 0-3, are resynched by MAST CLK/4 and then decoded within the command generation logic. Nine command signals are generated.

5-6.8.6.2 WR MODE and RD MODE Commands. The WR MODE command is decoded in the write control logic to generate write commands used internally in the IOC. These commands control transmission of data from the RDASC to one of five destinations in the PSP. Likewise, the RD MODE command is decoded in the read control logic to generate read commands used internally in the IOC. These commands control transmission of data from the PSP to the RDASC.

5-6.8.6.3 TGL CMD BANK REQ Command. The TGL CMD BANK REQ causes an interrupt to be generated to the ACU requesting that it toggle its command banks. This is requested after the RDASC has written new macro instructions and parameters into the unused side of this ping-pong command bank.

5-6.8.6.4 DIAG DIM MODE and DIAG SMI MODE Commands. The DIAG DIM MODE command places the IOC in a mode where it reflects back the 16-bit words that it has sent to the RDASC. This mode allows testing of the digital interface between the RDASC and the IOC. The DIAG SMI MODE command allows for testing of the IOC's SMI by feeding back the serial data output bus as the input to the serial data input bus to verify that the transfer occurs correctly. The EXIT DIAG SMI MODE command allows the IOC to exit the SMI test mode and return to normal operation.

5-6.8.6.5 TGL CMD BANKS FROM IOC Command. The TGL CMD BANKS FROM IOC command toggles the IOC's ping-pong output memory banks after the PSP has generated new radar data estimates for output to the RDA. The ACU can also toggle these banks.

5-6.8.6.6 Master Clear IOC and PSP Commands. The IOC MAST CLR command provides a master clear of the IOC, that resets the Source and Destination Control File addresses to zero. The PSP MAST CLR command performs both the master clear of the IOC function and also resets the PSP.

5-6.8.7 Destination Write Data Selection and Distribution. Write control commands from the write control logic (Figure FO5-11, sheet 15, zone 5B) control transmission of data from the RDASC to one of five destinations within the PSP. This data is transmitted from the RDASC via the PSPI TO IOC DATA 0-15 bus (sheet 16, zone 9B) and received in the PSP by a differential receiver. A write operation begins with the PSPI card of the RDASC (sheet 15, zone 10A) issuing the PSPI TO IOC DATA AVAIL command. This signal is received in a differential receiver of the IOC (zone 7A) and sent, as DATA AVAIL, to enable the PSPI-IOC data latch (sheet 16, zone 8B) to accept the data from the RDASC, OUTPUT DATA 0-15. This data is written into the destination file memory when the DEST FILE WRITE PLS is active. It is written into addresses called out by the destination file address counter. The first data word sent by the RDASC and written into the destination file memory represents the total number of destinations, N, to receive data (Figure 5-18). The next N pairs of words (2N words) contain specific data for the N destinations. Each pair of words contains specific data for one destination. This specific data consists of the individual destination codes along with the starting and final AU memory address of the destination, that can also be interpreted as the number of words written to each destination. The 2N+2 data word is actually the first piece of real data that is sent to destination 1 directly from the PSPI-IOC data latch (it is not registered in the destination file memory). At the same time that the first data word is written into the destination file memory, it is also stored in the capture number of destinations to follow register (Figure FO5-11, sheet 16, zone 8B). The N value contained in this word,

representing the number of destinations, is sent to the destination file address counter or an active LD DEST CNTR signal. The counter begins at a starting address and counts up to the N value. It outputs the DEST FILE ADRS until the N value is reached. This is the final address of the destination file memory that the first block of data from the RDASC is written into. Once the destination file memory is loaded, the 2N+2 data word is output from the PSPI-IOC data latch. This word is sent, via the BFR WR DATA bus (zone 4B), to one of five PSP locations. The location is called out by the DEST CODE field of the first two words read out of the destination file memory. The BFR WR DATA is written into a RAM at the selected destination. Writing is enabled by a write pulse, generated by a decoding of the FILE DEST SEL signal in the destination write select decode logic. The starting and stopping addresses that data is written to in this RAM is sent via the BFR WR ADRS bus. The difference between the starting and stopping address determines how many BFR WR DATA words are written to the selected destination RAM. The BFR WR ADRS is generated in the write word counter (zone 5B). The counter receives the 12-bit starting address field for each destination (see Figure 5-18). It counts up from this value, outputting the BFR WR ADRS signal as it counts, until it reaches the 12-bit final address, also supplied by the destination file memory. After all words to all destinations have been sent, the IOC notifies the RDASC processor that the transfer is complete. Detection circuitry (sheet 16, zone 6B) flags the fact that data has been written to all N destinations. It feeds back WR WORD CTR=N signal to the write control logic (sheet 15, zone 6B). The control logic outputs the WR COMPLETE signal to a differential driver, which outputs this status back to the RDASC via the IOC TO PSPI STATUS bus. Without successful verification, an error signal within the RDASC is generated.

5-6.8.8 Read Data Selection Control. The read (RD) MODE command output from the command generation logic is used to extract data from the PSP and HSP and send it to the RDASC in one of three selectable modes. To initiate a RD MODE, the source file memory (Figure FO5-11, sheet 16, zone 6A) is written to using data that specifies the various blocks of data to be read and the manner in which they are to be read. This source file memory is one of the five destinations written to in the PSP. It is destination #2. The first word written to the file (Figure 5-19) specifies the number of blocks of data to be read. A block is considered to be a portion of memory defined by a starting address and an associated number of locations to follow. Usually each block of data represents a meaningful grouping of data, such as reflectivity, spectral width, etc. The second word in the file specifies the intended unambiguous range in kilometers employed by the radar system. This value is used when unfolding data. The next 30 locations contain up to 15 pairs of words corresponding to 15 possible blocks of data that may be read. The first word in each pair specifies the starting address as well as whether the data is to be folded or unfolded. If it is to be unfolded, there is another bit to distinguish between 4:1 and 1:1 unfolding resolution. The second word in the pair specifies the number of 16-bit words to be read. The source file memory is divided into three sections. One section of the memory is allocated as PSP output memory. All radar data estimates are stored in this section. One section is unassigned but can be used for clutter filter data. One section is allocated as SMI memory.

5-6.8.9 PSP Output and Status Memory Control. The output memory (Figure FO5-11, sheet 14, zone 5B) receives data from one of the three AU memories. AU1, AU2, or AU3 are from the ACU DEST BUS. Output memory control logic determines which AU memory is read, and the location in the output memory this data is written to.

5-6.8.9.1 Address/Microinstruction Shadow Register. The memory address/microinstruction shadow register (Figure FO5-11, sheet 13, zone 6A) acts as a buffer for output memory write commands and memory addresses, or diagnostic commands and addresses when in diagnostic mode. This register is actually composed of a microinstruction register and a shadow register. The shadow register allows for serial loading of diagnostic data into the microinstruction register (sheet 10, zone 3A) for every microcycle (refer to IOC diagnostic section). The microinstruction register is loaded with bits 2-4 of the MC field of the AU microinstruction, output from the AU microinstruction register. These bits determine whether the output memory is to be read, written to with a fullword, written to with a halfword, or written to conditionally. Data from the AU is sent to the output memory only if the MC 2-4 bits contain a write command. The microinstruction register also receives the AU MEM ADRS 0-12 from the ACU. This is the address at which AU data is written into the output memory.

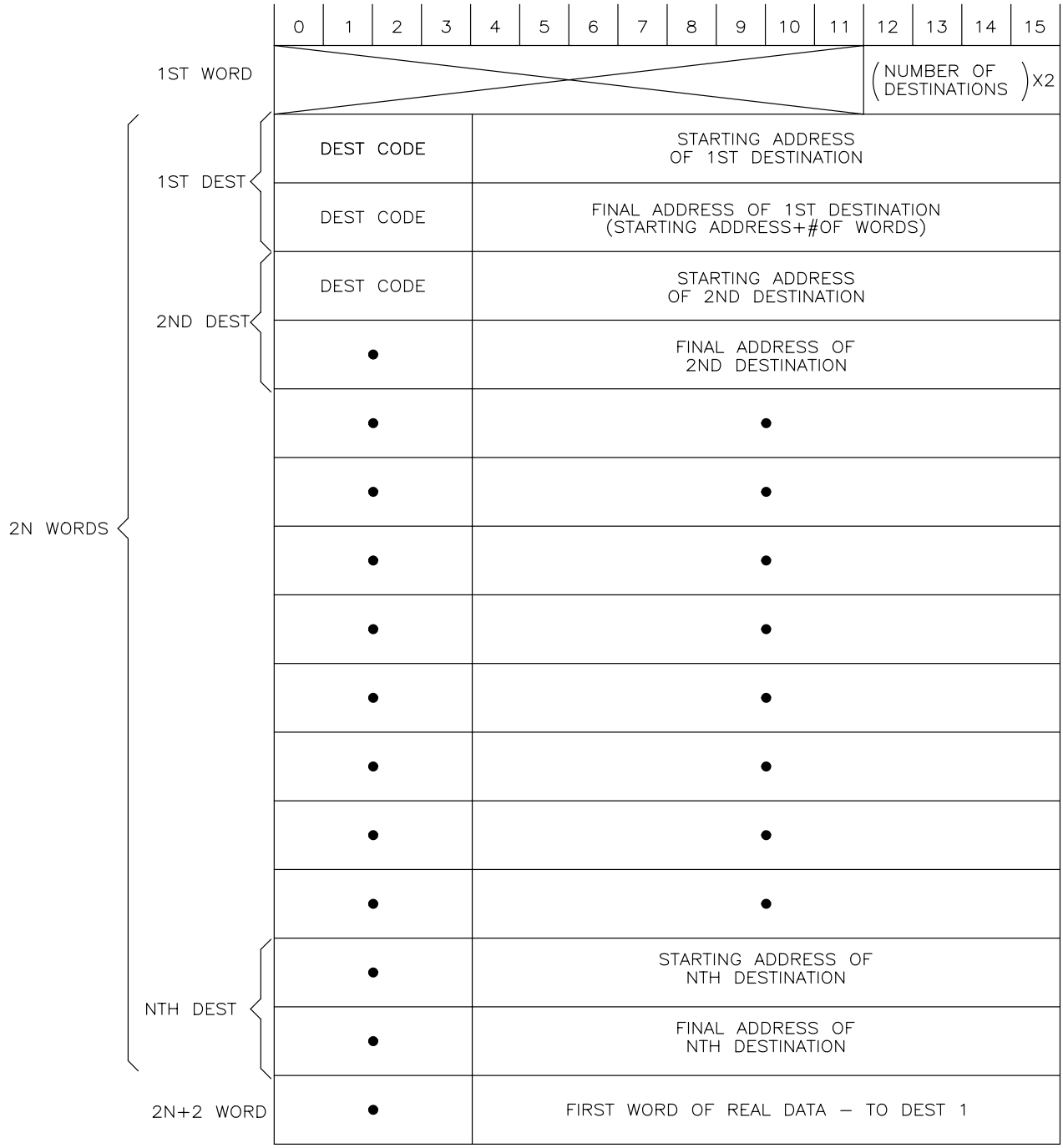


NX1855

Figure 5-18. Destination File Structure

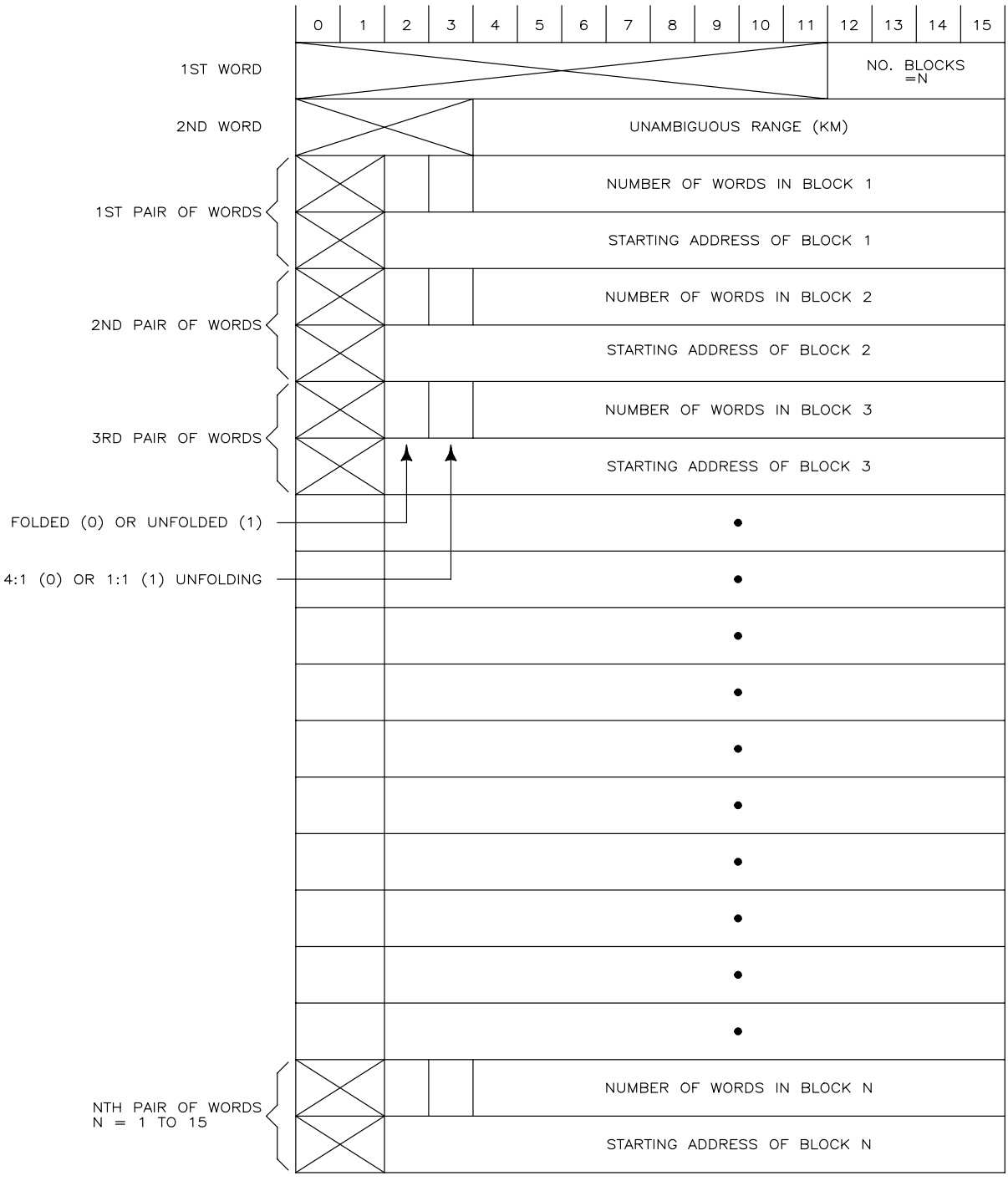


Figure 5-19. Source File Structure

5-6.8.9.2 Output Memory Write Sequencer. The output memory is written to with data from only one memory of the three AUs (AU1, AU2, and AU3) at a time. The output memory write sequencer (zone 5A) determines which AU memory is read from first, based on data from the DEST BUS. Any one of the three AUs can be read from first. Once an AU memory is read, the sequencer selects the next AU to be read, and continues this process until the last of the three AUs is read. The identity of the last AU is also provided by the DEST BUS and stored in the capture starting/last AU register (zone 6A). The sequencer outputs the identity of the selected AU via STATE BITS 0-3. These state bits are decoded and synched with MAST CLK/2, and sent to the IOC output and status memory section via the RD AU DATA 1-3 signal. This signal is the selection control signal for a multiplexer (Figure FO5-11, sheet 14, zone 7B) that selects between AU1, AU2, and AU3 MEMORY DATA OUTPUT. The sequencer (sheet 13, zone 5A) feeds STATE BITS 0-3 back to a comparator that determines if the last AU of the sequence is being written to. The AT LAST AU signal is active when the LAST AU NUMBER matches the STATE BITS 0-3. A selection switch (zone 6A) is preset to the value 3, representing the fact that there are three AUs in the PSP. Another comparator outputs an active AT BOTTOM AU signal if the STATE BITS 0-3 matches this value of 3, signifying that AU3 is being written to.

5-6.8.9.3 Output Memory Bank. The output memory bank (Figure FO5-11, sheet 14, zone 5B) into which AU data is written is selected by memory write control logic (sheet 13, zone 4A). The sequencer feeds the control logic with STATE BIT 0, which determines which memory bank is selected. Outputting of the write enable signal for the selected bank is triggered by the ARITH U WRITE CTRL ACTIVE signal. Both output memory banks are divided into an upper half and a lower half.

5-6.8.10 Output Memory Write Data Selection. During normal operation, the output memory banks (sheet 14, zone 5B) are loaded with data from one of the three AU memories. Selection is performed in the AU memory output shadow register multiplexer (zone 7B), based on the RD AU DATA 1-3 signal input from the output memory control circuitry. During diagnostic mode, an active SEL ACU signal enables data on the DEST BUS from the ACU to be input to the output memory banks.

5-6.8.1 1 Output and Status Memory. Data in the output memory can be read out in three different modes: normal mode, one-to-one (1:1) resolution mode, and four-to-one (4:1) resolution mode. In normal mode, data words are read sequentially from memory in the order in which they are stored. This type of read is used to extract HSP and SMI data from memory, or to extract radar data estimates from memory if no unfolding is desired. In 1:1 resolution mode, radar data estimates stored in the output memory are unfolded on a 1:1 resolution basis. For each data word in output memory, there is a corresponding word in status memory (zone 5A). The status memory is four bits wide (see Figure 5-20) and is mapped into the first 4K of the output memory as one-half of a two-port memory. Two passes are made through the status memory to resolve first- and second-time around ambiguities. One pass corresponds to going out in range until the unambiguous range is reached. This value is supplied by the RDA when the source file is written. During the first pass (0 - unambiguous range) bits 0 and 1 are used to unfold. During the second pass (1 x unambiguous range - 2 x unambiguous range) bits 2 and 3 are used.

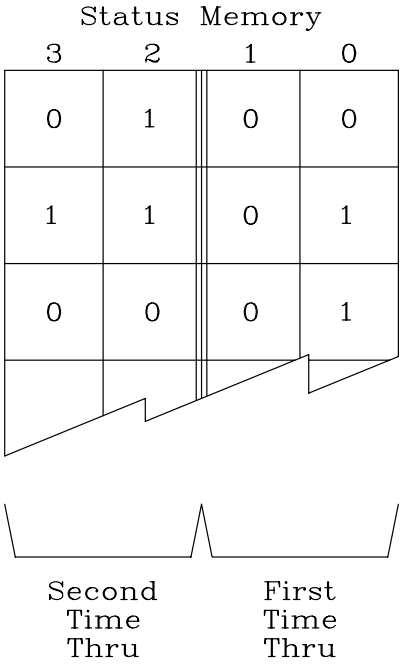


| Bits | | Operation |
|---|---|---|
| 1/3 | 0/2 | |
| 0 | 0 | Fill with Zeroes |
| 0 | 1 | Use Data |
| 1 | 0 | Use Data |
| 1 | 1 | Fill with Ones |

NX1857

Figure 5-20. Status Memory Structure

5-6.9 STANDARD MAINTENANCE INTERFACE (SMI).

The SMI provides diagnostics for each of the four functions of the PSP: the ISC, the AU, the ACU, and the IOC. The RDASC processor sends test injection signals to the PSP and monitors the results.

5-6.9.1 RDASC-PSP Diagnostic Interface and SMI Bus Generator. The test injection signals enter the PSP through the IOC in parallel, 16-bit form. They are converted to serial form in the SMI serial-parallel/parallel-serial converter (Figure FO5-11, sheet 21, zone 4A), and are output as part of the SMI BUS IN to each of the PSP's four functions. The SMI BUS IN also includes a diagnostic clock and a 4-bit function code. This code, DIAG FCTN 0-3, specifies diagnostic actions such as shift in data or load control words. The results of operations performed with test injection signals are output from a PSP function via the SMI BUS OUT. The serial data on this bus, DIAG SERIAL DATA OUT, is fed into a data latch (zone 6B) and clocked into the SMI serial-parallel/ parallel-serial converter. It is converted to parallel form and sent back to the RDASC via the IOC for monitoring.

5-6.9.2 ISC Diagnostics Interface. ISC diagnostics are provided via the SMI BUS IN (Figure FO5-11, sheet 17, zone 8A) sent from the RDASC-PSP diagnostic interface. ISC diagnostics allow the ISC's surveillance RAM (sheet 4, zone 5A) to be written, the input data bus to be forced to a known value, and ISC input timing and control signals to be simulated.

5-6.9.2.1 ISC Diagnostic Interface. The ISC diagnostic interface has eight procedure selection code switches (Figure FO5-11, sheet 17, zone 5B) which are set to a preset code. The RDASC processor selects the ISC diagnostic interface as a source for diagnostic sample data by sending the preset code to the ISC diagnostic interface via the SMI BUS IN. This code is converted to 8-bit parallel form and shifted onto the ISC DIAG BUS by the diagnostic shift register (zone 5A). This register is controlled by SHIFT CTRL 0 and 1 bits that are generated from a decoding of the 4-bit function code of the SMI BUS IN, DIAG FCTN 0-3. The 8-bit code is compared to the preset code set on the switches, PROC SEL CODE (zone 4B). When a match occurs, the ISC SELECTED LED lights and the ISC SELECTED signal is activated.

5-6.9.2.2 Diagnostic Force Data. Diagnostic force data for the ISC enter on the DIAG SERIAL DATA IN portion of the SMI BUS IN. This serial data is converted to parallel form in the diagnostic shift register and loaded onto the 16-bit ISC DIAG BUS. The DIAG BUS feeds directly to the A input of the address counter (Figure FO5-11, sheet 4, zone 5B) where it is used as the starting address at which diagnostic data is written into an AU. The AUs are loaded with diagnostic force CF data which feeds from the ISC DIAG BUS to the capture diagnostic CF force data register when decoding of the DIAG FCTN 0-3 code yields an active LD FORCE RGTR signal. DIAG FORCE CF DATA RE and DIAG FORCE CF DATA IM both contain a 6-bit exponent and a 12-bit significant.

5-6.9.2.3 Simulated Timing and Control Signals. Simulated timing and control signals are sent in from the RDASC and loaded off the ISC DIAG BUS into diagnostic control register #1 when the LD CTRL RGTR #1 signal is active. These signals, grouped as DIAG TEST ISC CTRLS IN (Figure FO5-11, sheet 17, zone 2B), replace timing and control signals from the HSP as inputs to the ISC timing and control circuitry (Figure FO5-11, sheet 3, zone 6B).

5-6.9.2.4 ISC Diagnostic Function. The ISC diagnostic function outputs DIAG FORCE BFR OUTPUT DATA and an address where it is to be written, DIAG FORCE WORD CNT DATA, when their respective registers (Figure FO5-11, sheet 17, zone 3B) are enabled by decoding of DIAG FCTN 0-3. ISC diagnostic sample signals are input to the ISC diagnostic multiplexer (zone 6A). To read this data, the RDASC processor (via the IOC) sends a particular code on the DIAG FCTN 0-3 portion of SMI BUS IN. Decoding of this 4-bit code in the ISC diagnostic decode logic yields an ENBL DIAG MUX signal that enables the multiplexer, and selection control bits that are loaded into diagnostic control register #2 and sent to the multiplexer as DIAG MUX SEL 0, 2. A diagnostic sample is selected to be output on the 16-bit ISC DIAG BUS by the multiplexer. This parallel data is received by the diagnostic shift register (zone 5A) and shifted out serially on the DIAG SR OUT bus. The shift register is controlled by the SHIFT CTRL 0 and 1 signals output by the ISC diagnostic decode logic. With ISC selected, the serial diagnostic sample data on the DIAG SR OUT bus is transferred to the RDASC via the IOC by the DIAG SERIAL DATA OUT bus.

5-6.9.3 AU1 Diagnostics Interface. The 4-bit diagnostic code of the SMI BUS IN, DIAG FCTN CODE 0-3, is decoded in the AU diagnostic function decode and control logic

(Figure FO5-11, sheet 18, zone 5B). Diagnostic data, DIAG SERIAL DATA IN, is loaded into the AU diagnostic shift register by the DIAG CLK. By serially shifting data into this register and issuing proper function codes, the diagnostics can read and write to all AU registers, memory, and most buses.

5-6.9.3.1 AU Memory Address. In normal operation, AU memory addresses, coefficient data, and ACU micro-instruction bits 55-0 are loaded in parallel into each AU via the microinstruction shift registers (Figure FO5-11, sheet 7). The AU microinstructions are decoded during every microcycle. In diagnostic mode, the microinstruction shift registers are loaded with serial diagnostic data, DIAG SER DATA IN (zone 3B). This data is loaded into specific AU memory addresses and then manipulated in the AU multiplier/accumulator input data selection function (sheet 6), the AU multiplier/accumulator function, and the AU output data selection and special function logic. Manipulated data at various points in these three functions are sampled by the diagnostic function.

5-6.9.3.2 Diagnostic Sample Data. To select AU1 as the source of diagnostic sample data, a code corresponding to AU1 is input to the AU diagnostic shift register (Figure FO5-11, sheet 18, zone 3B) via the DIAG SERIAL DATA IN portion of the SMI BUS IN. This code is converted to parallel form and loaded into the processor select bit comparator (zone 4A) by an active LD PROCESSOR SELECT command. The code is compared to an 8-bit code, AU PROC SEL SW BITS 0-7, set on the AU processor select switch, which consists of eight dual in-line package (DIP) switches. If the codes match, AU1 is selected, the PROCESSOR SELECTED signal is active, and the microinstruction/diagnostic data multiplexer (zone 2B) is enabled to send DIAG SERIAL DATA OUT to the RDASC via the IOC.

5-6.9.3.3 Real Value Output of Accumulator. The diagnostic section replaces the real-value output of the accumulator (sheet 6, zone 5A) with a known value, DIAG FORCE ACCUM BUS RE, and replaces the imaginary-value output of the accumulator with a known value, DIAG FORCE ACCUM BUS IM. These operations are performed independently. The real or imaginary force accumulator data is converted from serial-to-parallel form in the AU diagnostic shift register (Figure FO5-11, sheet 18, zone 3B). The parallel data is loaded into the force accumulator bus latch by an active LD ACCUM RE FORCE RGTR or LD ACCUM IM FORCE RGTR, decoded from the DIAG FCTN 0-3 code bits of the SMI BUS IN bus.

5-6.9.3.4 AU Diagnostic Multiplexers. AU diagnostic multiplexers A through E (zones 6A and 6B) and diagnostic latches 1 and 2 are used to receive and select samples of the diagnostic data manipulated in the AU's multiplier/accumulator and output data selection functions. The diagnostic control register provides enable signals to the latches and enable signals and selection codes to the multiplexers. A selected input to a multiplexer or latch is loaded onto the AU DIAGNOSTIC BUS and sent to the AU diagnostic shift register (zone 2B) where it is converted to serial form and output to the microinstruction/diagnostic data multiplexer. It is selected for transmission to the RDASC, via the IOC and DIAG SERIAL DATA OUT bus. The DIAG SHIFT CTRL 0 and 1 bits, decoded from the DIAG FCTN 0-3 code portion of the SMI BUS IN, control the multiplexer.

5-6.9.4 ACU Diagnostic. Besides providing for ACU diagnostics, the circuitry within this function provides part of the channel used to download microcode from the RDASC to the ACU's write control store RAM (WCSR). To test the ACU, the ACU diagnostic function replaces the microcode from the RDASC with a test microcode that is stored in an internal EEPROM. This test

microcode is translated to microinstructions within the ACU. There is a sampling of outputs of certain internal ACU functions affected by the test microinstructions. These test samples are routed back through the SMI to the RDASC for monitoring.

5-6.9.5 ACU Diagnostic Interface. Consistent with the other PSP diagnostic interfaces, the ACU diagnostics center around a 16-bit diagnostic shift register (Figure FO5-11, sheet 19, zone 7A) that sends and receives diagnostic data to and from the SMI bus. The DIAG SERIAL DATA IN portion of the SMI BUS IN is serially loaded into the shift register and output in parallel form to various diagnostic registers via the DIAG BUS. The DIAG FCTN 0-3 code portion of the SMI BUS IN, decoded in the download sequence and control logic circuitry, selects the particular register to receive the DIAG BUS. Samples of test-microinstruction-induced outputs of internal ACU functions are fed back from the ACU and received in the diagnostic multiplexer (zone 10A). The multiplexer select bits, DIAG MUX SEL 0-2, are provided by the diagnostic control register. The diagnostic control register is loaded by the DIAG BUS when the LD DIAG CTRL RGTR signal, decoded from the DIAG FCTN 0-3 code, is active.

5-6.9.6 EEPROM Microcode Storage and WCSR Download Control. During system initialization, the ACU WCSR (Figure FO5-11, sheet 10, zone 4B) and the AU WCSR (zone 4A) are loaded with microcode downloaded from the RDASC. Macrocode sent in from the RDASC provides addresses to selectively access and read out this microcode. This forms the microinstruction set stored in the ACU and AU microinstruction word shadow registers. In normal operation, the microinstruction is parallel loaded from the WCSR every microcycle. The microcode from the RDASC is downloaded from the RDASC to the IOC, sent through the SMI, and serially loaded into the microinstruction word shadow registers via the SHAD RGTR SDI bus (zone 4B). The microcode is then shifted from the shadow register to the WCSR RAM, thus completing the WCSR download.

5-6.9.6.1 ACU Diagnostic Mode. During ACU diagnostic mode, the source of the microcode downloaded into the WCSR is not the RDASC processor. Instead, microcode stored in an EEPROM microcode download memory (Figure FO5-11, sheet 19, zone 5A) is used. To select this EEPROM as the source, the RDASC processor sends in a starting address and a load command via the SMI BUS IN (zone 11B). The address, contained in the DIAG SERIAL DATA IN portion of the SMI BUS IN, is converted from serial-to-parallel form in the diagnostic shift register (zone 7A) and sent to the download address counter. An active LD DNLD ADRS signal, decoded from the DIAG FCTN 0-3 code bits of the SMI BUS IN, initiates loading of the address into the address counter. This counter counts up from this address, while outputting an EEPROM address, until it reaches a maximum download address. Microcode data is read out of the EEPROM, serially shifted through the EEPROM shift register and through various selection circuitry, and downloaded, eight bits at a time, to the WCSR via the SHAD RGTR SDI bus. The DIAG/DNLD CTRL command controls the selection circuitry.

5-6.9.6.2 Microinstruction Word Shadow Register. Either microcode from the EEPROM or output data from the AU microinstruction word shadow register (Figure FO5-11, sheet 10, zone 3A) is selected for a cyclic redundancy check (CRC) (sheet 19, zone 3A). The CRC is a process to detect errors in the transmission of binary data. As each bit of the EEPROM microcode is output to the SHAD RGTR SDI bus via the CRC DATA IN bus, it is also applied to the CRC processor. A CRC is calculated by dividing the entire numeric binary value of the block of data by a constant.

The quotient is discarded and the remainder is added to the block. The identical process is performed on the data received, MICRO INSTR RGTR SERIAL OUTPUT DATA. The two signals are compared just before the download is complete. If they do not match, the CRC ERROR signal is generated.

5-6.9.7 Break Point Processing. This circuitry provides macroinstruction and microinstruction break point capability within the ACU. Break points are set and cleared by writing to the break point register, via the 16-bit DIAG BUS, output from the diagnostic multiplexer. Bits 0 through 11 are the break point addresses, outputted from the register on the BREAK POINT RGTR DATA line. Bit-12 selects a macroinstruction or microinstruction break point. It is output on the MACRO BREAK POINT CMD signal. When it is active, it enables the micro/macro break point select logic to route the MACRO ADRS received onto the BREAK POINT ADRS bus. Otherwise, the DIAG/DNLD MICRO ADRS is outputted. Bit-13 of the DIAG BUS, output from the break point register as ENBL BREAK POINT, enables the break point when it is active and disables it when it is not. The break point detection comparator receives the break point address output from the diagnostic multiplexer via the BREAK POINT RGTR DATA bus. It compares this address to the microinstruction or macroinstruction address selected and input on the BREAK POINT ADRS bus. If the two addresses match, the BP MATCH command is issued, indicating that the ACU is stopped at break point.

5-6.9.8 IOC Diagnostic. Similar to the other PSP diagnostic interfaces, the IOC contains a shift register (Figure FO5-11, sheet 20, zone 4B) that interfaces with the SMI bus and decode logic (zone 6B) that decodes the DIAG FCTN 0-3 field of the SMI BUS IN. Decoding of this field generates commands that enable IOC diagnostic registers to receive data from, or output data on, the DIAGNOSTIC BUS. In addition to this generic diagnostic hardware, the IOC diagnostic function contains a microinstruction shadow register serial data in (SDI) control logic (zone 4A) and a capture diagnostic destination bus (zone 2A).

5-6.9.8.1 SDI Control Logic. The SDI control logic (zone 4A), when selected and enabled by DIAG FCTN 0-3 code, receives diagnostic serial data from the RDASC. The SDI control logic sends this data, via the SHAD RGTR SDI bus, to the shadow register portion of the IOC memory address microinstruction/shadow register (Figure FO5-11, sheet 13, zone 6A). For an active SHAD RGTR MODE signal, this diagnostic data is placed directly on the MC 2-4 bus and the ACU MEM ADRS 0-12 bus. The RDASC processor can then load the output memory with diagnostic data.

5-6.9.8.2 IOC in Diagnostic Mode. With the IOC in diagnostic mode, all ACU source bus selects are disabled. These selects are instead provided by the IOC diagnostic control register (Figure FO5-11, sheet 20, zone 4A). The control register receives this data from the RDASC via the DIAG SERIAL DATA IN bus, the diagnostic shift register, and the DIAGNOSTIC BUS. A particular register or memory is selected for inspection by the DIAG SOURCE BUS SEL 0,1. Its data is loaded onto the source bus and routed to the IOC diagnostic multiplexer (zone 6A).

5-6.9.8.3 IOC Diagnostic Multiplexer. The IOC diagnostic multiplexer provides observation capability into the IOC. Inputs into the multiplexer include the source bus, the destination bus, and the current address of each bank of output memory. The multiplexer select bits, IOC DIAG MUX SEL 0-2, are provided by the IOC diagnostic control register, which is loaded by the DIAGNOSTIC BUS when the LD DIAG CTRL RGTR signal is active. Data selected to be passed through the

multiplexer is loaded onto the DIAGNOSTIC BUS by an active ENBL DIAG MUX signal. It is shifted through the diagnostic shift register, passed through the diagnostic/microinstruction multiplexer, and sent back to the RDASC.

5-6.9.8.4 Diagnostic/Microinstruction Multiplexer. The diagnostic/microinstruction multiplexer (zone 3B) enables data from one of the AU memories to be fed back to the RDASC for monitoring. The diagnostic function selects the AU memory to be monitored. It provides the output memory write sequencer (Figure FO5-11, sheet 13, zone 5A) with a starting and last AU number via the DIAG DEST BUS. The data on this bus is provided to the IOC diagnostic function by the RDASC via the DIAG SERIAL DATA IN bus (Figure FO5-11, sheet 20, zone 6B) shifted onto the DIAGNOSTIC BUS, and loaded into the capture diagnostic destination bus register (zone 2A). The write sequencer generates the RD AU DATA 1-3 bus to select the AU memory data that is passed through a multiplexer (sheet 14, zone 8B). The MEM DATA OUT from the selected AU memory, normally loaded into the output memory, is instead sent directly to the diagnostic/microinstruction multiplexer for transfer to the RDASC. The DIAG FCTN 0-3 code acts directly as the selection signal for this multiplexer.

# Section 5-7. RDA Status and Control Processor Functional Block Diagram Description

## 5-7.1 GENERAL DESCRIPTION.

This section discusses the RDASC processor at the functional block level. Throughout this section, refer to Figure FO5-12. The RDASC operates under local or remote control. Under local control, it sets the RDA mode and performs the various turn-on and shutdown procedures based on control inputs from the Maintenance Terminal. Under remote control, the same operations are performed in response to the control inputs from the MSCF workstation. Under normal remote control operation, the scan pattern to be executed, waveform types, pulse repetition periods, pulse widths, and other control parameters are specified by the RPG. The RDASC processor generates the pedestal control commands, closes the position loops of the pedestal, and serves as the control processor for the PSP. It monitors and assesses the performance of the RDA, initiates automatic calibration, performs calibration calculations, and reports RDA status to the RPG. It formats reflectivity, mean radial velocity, and spectrum width data received from the PSP, and initiates data transfer to the RPG. The RDASC has internal (bus) interfaces with data storage assembly, wideband communications link, programmable signal processor, control panel, and archive II. It has external (peripheral device) interfaces with the DAU, pedestal control unit, and maintenance terminal. The RDASC processor can be subdivided into the following areas:

- Processor System Bus Structure
- Timing
- Central Processing Unit (CPU)
- Main Memory (Composite Memory Module (CMM))
- Direct Memory Interface (DMI)
- Mass Storage and Archiving
- Peripheral Interface
- PSP/RDASC Interface (PSPI)
- Control/Diagnostic System (CDS)

These functions are described in paragraphs 5-7.2 through 5-7.10, respectively. Paragraph 5-7.2 describes the system(s) bus which interconnects the major functions. Figure FO5-12, an overall functional block diagram of the RDA Status and Control Processor UD5A12, shows the composition of each function as well as the interrelationship between functions.

**NOTE**

This section refers to the RDADP as UD5, the Receiver as UD4, the Transmitter as UD3, and the Waveguide Pressurization Unit as UD6. Unless otherwise specified, the information also applies to redundant systems UD105, UD104, UD103, and UD106.

5-7.2 PROCESSOR SYSTEM BUS STRUCTURE.

The system bus (S-bus) (Figure FO5-12) is a synchronous bus used to interconnect major modules: the CPU, the CMMs, and the DMI. The S-bus conveys messages between modules on two distinct 32-bit data paths: the To-path (T-path) transfers addresses and writes data to memory; the From-path (F-path) transfers read data from memory. The F-path is also used for CPU messages, direct I/O, and interrupts. The two paths are electrically identical. Each path contains 50 data lines which are divided into four fields: 5-bit function, 8-bit identification (ID), 32-bit data, and 5-bit parity. These four fields comprise a data item. The parity bits help assure system integrity. Each path also contains two acknowledge and six acquisition signals. The acknowledges indicate the receipt of each data item. The acquisition signals control when each unit can use the bus.

5-7.2.1 Synchronous Operation. Bus operation is synchronous with the 10 MHz system clock (paragraph 5-7.3.1 ). This clock is derived from a 20 MHz clock which is distributed to each board. Addresses and data are transferred from a master to a slave during one or more clock cycles. The master of each path has temporary control of that path. The next master is determined at the end of each operation. Bus acquisition circuitry allows positional priority, round-robin, and high-priority access.

5-7.3 TIMING FUNCTION.

The Timing Function (Figure FO5-12) generates clock signals to synchronize circuits using the S and CDS buses. This function consists of S-bus Terminator Board UD5A12AT1, S-bus Clock Distribution Board UD5A12A21, Time of Day (TODY) Clock UD5A12A20A1, and circuits on the boards interfacing with the S and CDS buses. An oscillator on the S-bus terminator board generates a 40 MHz signal which is divided by 2 to form the 20 MHz OSC clock. The resulting 20 MHz signal is then output to the clock distribution board where it is split. One branch is propagated to the S-bus backplane where the clock signal (OSC0) is distributed to all S-bus modules. The other branch is divided by 256 to form a 78,125 Hz frequency baud rate clock (BRCLK) that is transmitted to the CDS Master Module, UD5PS5A3.

5-7.3.1 S-Bus Timing. The 20 MHz OSC clock is the master timing signal for the S-bus. It is applied to the CPU and CMM boards. These boards divide the signal by 2 to produce the 10 MHz system clock (SCLK) which is used to run on-board circuitry and synchronize S-bus data transfer operations.

5-7.3.2 CDS Bus Timing. The master microprocessor in the CDS divides the 78 KHz BRCLK frequency by 8, thereby causing its CDS bus interface to run at 9600 baud.

1. The M3200 CPU and CMM on the CDS bus further divide their 10 MHz system clock (SCLK) by 2 to provide the 5 MHz clock input to their slave microprocessors. The microprocessors divide the clock input by 4 to provide their processing circuits with 1.25 MHz input and output data strobes that are synchronized with the board's 10 MHz SCLK. These strobes facilitate data transfers with their host modules. The slave microprocessor further divides the internal clock frequency by 128. This establishes the 9600 baud rate at which the CDS bus operates. Note that while the master and slave CDS bus serial interfaces derive their clock frequency through

different means, they share the same root clock signal (20 MHz OSC0); hence, they are synchronized.

2. The CDS bus baud rate and slave microprocessor operations are functions of the 20 MHz clock signal; changing the speed of this signal, for troubleshooting purposes, proportionally affects slave microprocessor speed and the CDS bus baud rate. However, since the master's processing function is driven by a separate 5 MHz crystal, its clock speed is unaffected.

The timing function also contains the TODY Clock card UD5A12A20A1 and the Loader Storage Unit (LSU) card UD5A12A20A2. Both cards contain a universal clock (UCLK) function.

5-7.3.3 Universal Clock (UCLK). The universal clock functions in the TODY clock card and the LSU card are identical. Each universal clock function has two I/O devices; a programmable precision interval clock (PIC) and an AC line frequency derived clock (LFC). The PIC provides the user with a processor interrupt and a program accessible counter which is based on a dynamically variable (via program control) precision resolution clock and interval counter. The LFC is derived from the AC power line and provides the user with a processor interrupt at twice the line frequency.

5-7.3.4 Time of Day (TODY) Clock. The TODY Clock UD5A12A20A1 provides the system with a constant reference for time of day, day of week, day of month, and year. All are maintained when the system is turned off through battery backup. Depending on battery condition, the time and date will be maintained for up to one year. The TODY clock interfaces with the CPU via the MUX bus.

5-7.3.5 Loader Storage Unit (LSU). The LSU UD5A12A20A2 stores the program that loads the OS/32 operating system from the SCSI disk into the RAM on system startup. The program is located in PROM chips on the LSU card. Data stored in these chips is not lost in the event of the power loss. The LSU card interfaces with the M3200 CPU through the MUX bus.

## 5-7.4 CENTRAL PROCESSING UNIT (CPU).

The RDA Status and Control Processor (Figure FO5-12) contains one M3200 CPU, UD5A12A4. The CPU contains an S-bus interface, a FETCH instruction, a virtual address translator, an arithmetic logic unit, and a multiplier function. The following paragraphs describe the CPU functions in detail.

5-7.4.1 S-Bus . The S-bus connects modules to form a system. Each module performs a function required in a computer system. These modules are implemented on printed circuit boards which plug into an S-bus backplane. Three types of modules are used to describe operations on the S-bus. Memory modules are selected by memory address; the other modules are selected by unique unit IDs, which are assigned by the CDS.

1. Memory Modules. Memory modules consist of an array of random access memory (RAM) circuits and a controller. The controller interfaces to the S-bus, controls the RAM array, and buffers data. All operations to the memory module are via the S-bus.

2. CPU. The CPU is a programmed unit which accesses data stored in the memory modules. The CPU uses cache buffers to improve performance. The CPU can communicate with other CPUs and can send commands to I/O units.

3. I/O Unit. I/O units provide an interface between the S-bus and peripheral devices. These devices are used for secondary storage (i.e., disk and tape drives), communications, and interaction with the user. I/O transfers may either be direct I/O controlled by a CPU or direct memory access (DMA) controlled by the device.

5-7.4.2 Bus Transfers. The module which has gained control of a path is called the master of that path. It can send a data item to another module, called the slave. On the T-path, any unit can be the master. The slave is a memory board; it is selected by the 32-bit memory address in the first word transferred. On the F-path, any module may be the master. The slave is a DMI and is selected by the 8-bit bus ID. The CPU is identified by a unit ID number. The CPU puts its ID on the T-path when it initiates a memory operation and recognizes its ID when it receives responses on the F-path.

5-7.4.3 Parity. All data transfers on T-path and F-path are protected using even parity. Even parity means that the total number of 1-bits in the field, including the parity bit, is even. That is, if the field has an even number of ones, the parity bit is zero; otherwise, the parity bit is one. Parity is computed on logical values, not on the voltage levels on the bus; high signals are zero. When the bus is inactive (high), all bits are zero and the parity is even (correct).

5-7.4.4 Memory Operations. Memory is referenced solely by memory address; memory modules do not have unit IDs. Units initiate memory operations on the T-path. The function specifies a memory operation. The data field contains a memory address. Each memory module recognizes the addresses it contains. For memory writes, subsequent cycle send data to be written. For memory reads, the addressed memory module performs the operation then returns data on the F-path. Special memory operations provide test-and-set operations used for software interlocks. These operations read a word and then immediately modify that word in main memory.

5-7.4.5 Messages, Broadcasts, and Direct Input/Output (I/O) on F-Path. The CPU communicates directly using the F-path. Messages can be sent to interrupt another unit. Broadcast interrupts are received simultaneously by the CPU; this provides a means for the operating system to preempt lower priority CPUs and to delete old virtual address translations (VATs). Direct I/O operations allow a CPU to directly access an I/O device.

5-7.4.6 Input/Output (I/O). The I/O subsystem is supported in S-bus systems using the DMI function. This function generates the I/O multiplexer (MUX) and DMA buses. The MUX bus communicates with an assigned CPU using special codes on the S-bus operations. The bus is limited to 24-bit addresses, but the DMI board can translate these to 32-bit addresses for use in extended memory systems.

5-7.4.7 Cache Operation. The CPU uses cache buffers to reduce memory operations. A cache is a small, high-speed memory which is used to retain recently used data. This data is likely to be used again soon. When it is, the cache provides the data, thus avoiding the delay and contention of using main memory. Caches are a hardware feature; their operation is transparent to the running program. Caches significantly improve speed and reduce contention for bus cycles. However, each CPU must ensure that the data in its cache is current. To do so, it monitors the activity of other units on the T-path for memory writes and special memory operations. Whenever a write affects a block stored in the cache, that block must be invalidated. The cache contents cannot be updated from the data on the S-bus. To ensure that caches are kept current, when a CPU writes to memory, both that cache and main memory are updated immediately.

5-7.4.8 Processing Element. The CPU processing element operates as an instruction pipeline. The pipeline boosts performance by overlapping the execution of four consecutive instructions. See Figure 5-21. Each instruction is performed in four phases: instruction fetch, address calculation, operand fetch, and execution. Each phase is implemented in a dedicated hardware unit called a stage. The four stages can operate simultaneously on separate instructions. Instructions are passed from stage to stage through the pipeline. Interlock circuits control when each instruction can proceed to the next stage. Simple instructions are performed in a single cycle; more complex instructions require multiple cycles in one or more stages. The following paragraphs describe the four processing stages that are implemented on the M3200 CPU board.

1. Stage 1 fetches and decodes user instructions from an 8-kilobyte instruction cache.

2. Stage 2 computes operand addresses from the instruction fields decoded in stage 1. Its two 32-bit adders can sum three operands in one cycle. These operands can be the program counter, an index register, and the address field of the instruction.

   During this time, an 80-bit micro-instruction is read from a 16-kiloword control store. The micro-instruction contains fields which are decoded to control sections of the CPU.

3. Stage 3 fetches two operands for the execution unit (stage 4). One operand can be read from the 8-kilobyte data cache. Separate caches are implemented so that instructions and data may be read simultaneously. The caches use physical memory addresses. The first access to a virtual page must be translated to a physical address. Each translation is saved in a buffer memory and subsequent access is not delayed. Two register values can be read simultaneously from redundant register files. Each register set includes both 32-bit and 64-bit integers and floating point data. Since it is time consuming to load or store registers, the CPU includes eight sets of general registers. A new set can be selected without a lengthy context switch.

   During this time, the function code is decoded by a 1024-word by 40-bit PROM in the execution sequencer. This is, in effect, a second level of microprogramming.

4. Stage 4 executes the instruction. Its major elements are a 64-bit arithmetic/logic unit and a 64-bit parallel multiplier array. Both elements can operate on either integer or floating point data. Intermediate floating point values contain an extra 8-bits of precision to help preserve the accuracy of trigonometric and other functions. The stage 4 execution unit is controlled by a function code, two operand select fields, and a destination field.

5-7.5 MAIN MEMORY FUNCTION.

The RDASC processor is configured with 8MB of random access memory (RAM) by using one composite memory module (CMM). The CMM module contains a memory controller, 8MB of memory, and a CDS microcomputer. The CMM interface with the S-bus, which consists of two independent 32-bit data paths.

The To-path (T-path) is available for memory requests and write data. The From-path (F-path) is used for memory read data and system input/output (I/O). CPU initiates memory operations by

sending an ID code, function code, and 32-bit address on the T-path. This is the only function of the T-path. Read data is returned from memory on the F-path. The F-path is also used for communication between processors and modules. The S-bus has associated control lines, function code lines, identification lines, parity lines, clock lines, and a serial communications path used for diagnostic and configuration information. Transfers on the S-bus are performed at a 10 MHz rate. The CMM is a combination storage module and memory controller configured on one printed circuit board. The CMM uses a microprocessor, an error check and correction (ECC) circuit, and a gate array. The microprocessor controls on-board diagnostics, error logging, memory initialization, address assignment, level or interleaving, and memory scrubbing. The ECC circuit controls error detection and correction of memory. Memory modifying operations are accomplished with a gate array. The ECC provides single-bit error detection and correction, double-bit error detection, and some multiple-bit error detection. The CMM accepts commands by constantly monitoring the T-path.

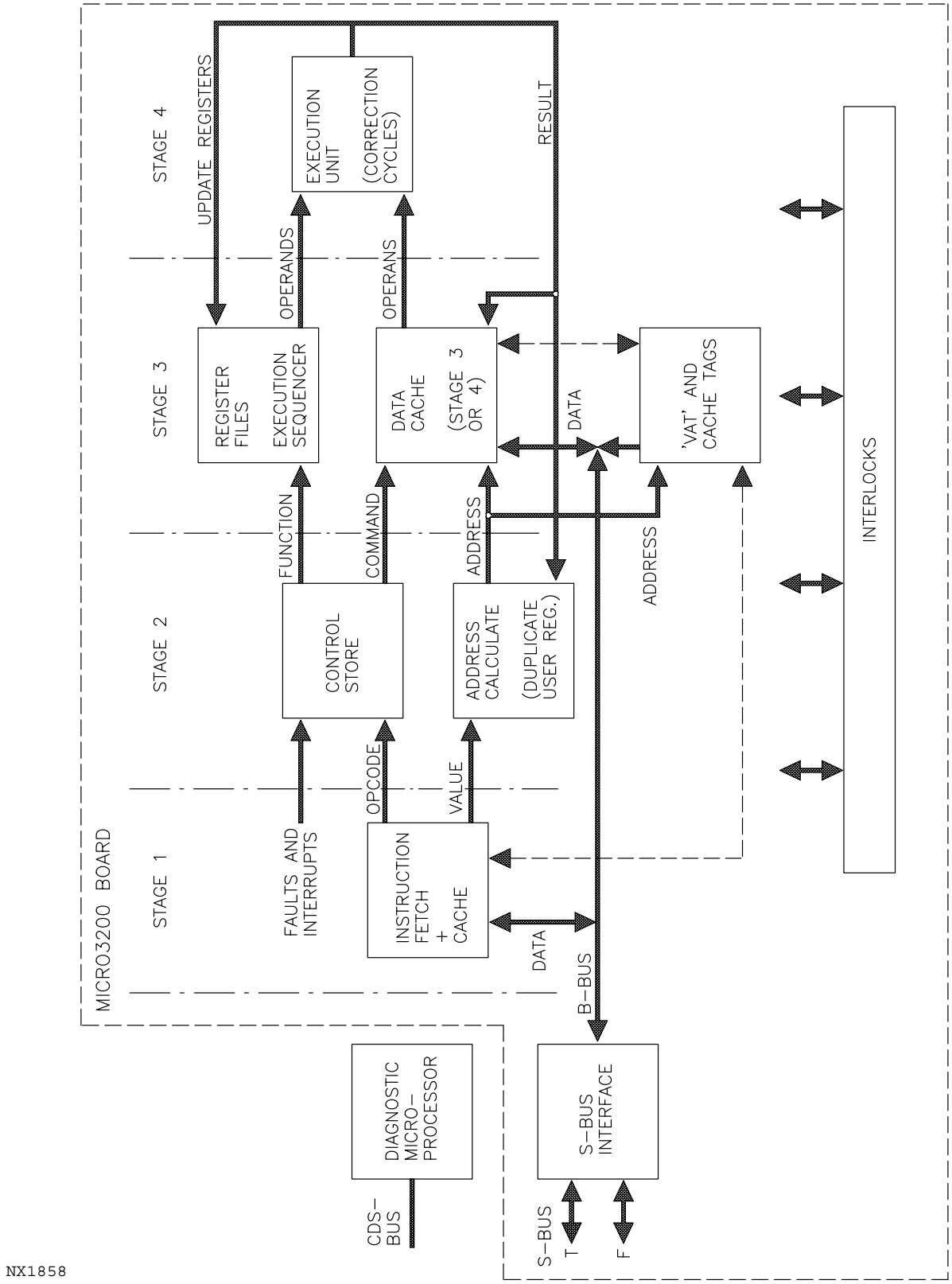


Figure 5-21. Central Processing Unit

5-7.6 DIRECT MEMORY INTERFACE (DMI) FUNCTION.

The DMI function (Figure FO5-12) is performed by one DMI card UD5A12A5. The DMI generates the multiplexer (MUX) bus and the direct memory access (DMA) bus. The MUX bus provides data transfers between the M3200 CPU's memory and low-speed devices such as terminals and printers (via the peripheral interface). All transfers are controlled by the CPU. The MUX bus also provides a path for the CPU to initiate the direct transfers over the DMA bus. The DMA bus provides data transfers between the CPU's memory and high-speed devices such as fixed disk drives, optical disk drives, and the VMEbus system. After an initial direction by the CPU over the MUX bus, the transfer of large amounts of data over the DMA bus directly into the CPU's memory is performed. The CPU's memory can be placed back onto the DMA bus for transfer into a fixed or optical disk drive via the selector channel (SELCH) card. Again, this would be initially directed by the CPU via commands sent over the MUX bus.

5-7.6.1 Multiplexer (MUX) Bus. The MUX bus is the primary data/control channel between the DMI and system input/output (I/O) devices. The DMI initiates, monitors, and responds to all system I/O devices through MUX bus operation sequences. Data transfers between the DMI and system I/O devices may be performed directly by the CPU over the MUX bus or controlled indirectly by the CPU using a DMA data transfer device such as the selector channel (SELCH). When an I/O device connected to the MUX bus wishes to interrupt the CPU, it generates an attention signal. The attention signal is received by the DMI over one of the four attention lines. This initiates the corresponding acknowledge line which signals the CPU that it has an interrupt pending. These signals are sent to and received from the CPU on a single interrupt line and an acknowledge daisy-chain. Data transfers are performed by the CPU over the MUX bus based on commands issued between the DMI and the CPU. In response to these commands, the DMI obtains data from, or transfers data across, the MUX bus. The DMI provides single or multicycle operations to address the device controller, transmit the decoded function, send or receive data over the 16 bidirectional data lines, and synchronize the exchange.

5-7.6.2 Direct Memory Access (DMA) Bus. The DMA bus consists of 40 signal lines (transistor-to-transistor logic (TTL) levels). Included in these 40 signal lines is a 29-bit bidirectional data bus from which three forms of data are multiplexed: address and command, write data, and answer data. The address word includes a 23-bit halfword address (16 MB capacity), a 3-bit command code, and a 3-bit direct memory access controller (DMAC) identification code. The write data word is 16 bits. Unassigned bits are zero. The answer data word consists of a 16-bit data word, a 3-bit DMAC identification code, and a 2-bit code for trouble conditions. The DMI returns a memory malfunction code when it recognizes a nonresponsive or nonpresent memory in address or read operation. If there is an incorrectable error, it returns a memory error code. These codes are stored in the status of the active DMAC for subsequent evaluation by the CPU.

5-7.6.3 Direct Input/Output (I/O) Operation. The DMI receives all direct I/O operations from the CPU via the F-path. The F-path is continuously monitored, by the DMI, for direct I/O operations. When the DMI decodes its own ID with a valid direct I/O function code, it stores the 32-bit word associated with it and checks parity. Local F-path acknowledges are then returned to the processor. The local F-path compatible I/O control logic assumes control to arrange the generation of the MUX bus operation. When this preparation is complete, the MUX control logic assumes control and generates the appropriate MUX bus sequence. Upon completion of the MUX

bus operation, control is again assumed by the F-path compatible I/O control logic. The F-path is then acquired and an IOK signal (operation was completed successfully) is returned to the CPU that initiated the I/O operation. If the MUX bus operation fails to complete for any reason; i.e., no synchronization (SYNC) signal returned on the MUX bus, or if the compatible I/O timer times out, an error signal response is sent to the CPU instead of an IOK signal.

5-7.6.4 Direct Memory Operations. The DMI performs three basic DMA operations: read, write, and test and set.

1. DMA write operations are defined as write halfword or write burst, with burst defined as an even number (up to eight) of halfwords. Read operations are also halfword or burst, with a read burst being an even number of halfwords up to eight.

2. The S-bus allows any bit of the 32-bit data field to be tested and set. The address of the word is sent to memory and the DMI selects the bit position for the test and set operation. The bit position (selected by the DMI), along with the address, is sent to memory, indicating the bit to be tested and set.

3. One DMA operation is initiated by a DMAC (SELCH or VCI). DMACs are initialized by the CPU and loaded with a starting and ending memory address before the data transfers start. The DMAC sends a request to the DMI for the DMA bus. When the DMAC is granted the DMA bus, it sends the starting address, command, and DMAC ID to the DMI via the DMA bus.

4. The DMI is capable of performing two DMA operations simultaneously; i.e., two CMM reads can be initiated through the DMI, one each from two separate DMACs. Only one DMA operation may control the bus. When two DMA operations are active, the DMI sets the MBUSY signal, which prohibits other DMA operations from accessing the bus.

5. DMA operations are completely assembled before they are sent to the T-path. This is also true for read data returned from the CMM. The data is assembled and the S-bus operation is completed before the DMI requests the DMA bus to return the data to the DMAC. Local buffers are provided to facilitate assembly of the complete operation.

6. The DMI has two sets of local memory buffers for both S-bus paths (T-path and F-path). The T-path memory buffers are used to accept an address and up to four words of data for the CMM. The F-path memory buffers are used to send up to four words of CMM data to the DMAC. This enables the DMI to perform two operations at a time; i.e., if two writes to CMM are being performed, one of the T-path buffers can put the address and data onto the S-bus while another buffer is loaded by a second DMAC.

7. The same is true for the F-path read memory. The CMM can load a read into one buffer while the second buffer is sending data back to the DMAC. This type of overlap assures that the DMI can provide the full bandwidth of the DMA bus.

5-7.7 MASS STORAGE AND ARCHIVING FUNCTION.

The mass storage function holds programs and data while the CPU is not using it. The mass storage function accepts and sends data to and from the memory function and the CPU function. The archiving function permanently stores the calculated and formatted data concerning weather and the manner in which it was collected.

5-7.7.1 Selector Channel (SELCH) UD5A12A13. The SELCH is a direct memory access interface that provides a direct means of communication between input/output (I/O) device controllers and the memory system. It is connected to the memory system via the DMA bus. The I/O device controllers are connected to a SELCH by a private (SELCH) bus and only respond through their SELCH. The SELCH has access to three buses: the MUX bus between the CPU and the SELCH, the direct memory access (DMA) bus between the memory system and the SELCH, and the private multiplexer bus between the SELCH and the input/output (I/O) devices connected to the SELCH. The SELCH generates its own bus (SELCH BUS) to communicate with its subordinate I/O devices. The two subordinate I/O devices for this SELCH are the Archive II Controller UD5A12A11 and the Optical Disk Controller (ODC) UD5A12A12.

5-7.7.2 Optical Disk Controller (ODC). The optical disk controller (ODC) is an input/output (I/O) controller which interfaces SCSI peripheral devices on the SCSI bus to the private multiplexer bus or SELCH bus. The ODC, which interfaces to the SELCH bus, generates device-independent bus signals on the SCSI bus. The ODC transmits and receives data over the SELCH bus at full speed. Buffering is provided to resolve speed discrepancies between the SELCH bus and the SCSI bus. The ODC returns the synchronization (SYN-) signal immediately after sensing any control line activity, thereby releasing the SELCH bus. This reduces bus tie-up time and improves the general system throughput.

5-7.7.3 Streaming Tape Drive. The 1/4-inch streaming magnetic tape drive unit loads the RDA status and control program (CPCI01), signal processing program (CPCI02), RDASOT (CPCI06), and the operating system program (CPCI10) from a 1/4 inch streaming tape into the fixed disk. The program is then available for use by the CPU through the ODC and SELCH.

5-7.7.4 Megabyte Fixed Disk. The disk drive unit stores the CPCI 01, 02, 06, and 10 programs and provides storage of base data and RDA equipment status for up to six hours of operating time. The disk drive is a Winchester-type disk drive with an embedded SCSI controller. The drive has an average seek time of under 20ms and a data transfer rate of up to 1.25MB/second. Using the SCSI controller, this drive provides a large amount of secondary storage in a 5-1/4 inch form-factor package.

5-7.7.5 Archive II Controller. The archive II controller is able to write digital radar data and scan pattern information to recording media. This archival storage media can be interfaced with the RDA status and control processor. The archive II controller is a subordinate I/O controller to the SELCH (A2). Scan pattern information provides volume scan control data including elevation angle, PRFs, maximum range, waveform, and clutter map. This data is provided on a per-volume-scan basis.

5-7.8 PERIPHERAL DEVICE INTERFACE FUNCTION.

The 8-Line Communication Multiplexer UD5A12A19 is the RDASC processor’s peripheral interface. The 8-Line Communication Multiplexer (COM MUX) uses eight RS-232 serial ports to

perform data transfers. Only three of the eight ports are used. These three ports interface with the data acquisition unit (DAU) interface, the maintenance console, and the servo antenna positioning electronics, as described below. Data transfers between these three functions and the COM MUX are bit serial and at a baud rate selected under program control. The COM MUX contains circuits to generate and detect the control signals required to set up, take down, supervise the data communications channel, and provide proper status and interrupt information to the processor.

5-7.8.1 RS-232 Communication with DAU Interface. The RS-232 port that communicates with the DAU interface is a two-way communication link. The COM MUX accepts fault alarms and status data from the transmitter, antenna positioning electronics, the system microwave, the receiver, the RDA environmental sensors, and RDA utilities through the DAU. The RDASC sends serial data to the DAU interface which contains mode command for the antenna positioning electronics, the transmitter, and the auxiliary power generation system.

5-7.8.2 RS-232 Communication with RDA Maintenance Console. The RS-232 port that communicates with the RDA maintenance console is a two-way communication link. The RDA maintenance console can enter control and commands to the RDASC processor, perform RDA systems operational tests, and request system status.

5-7.8.3 RS-232 Communication with Servo Antenna Positioning. The RS-232 port that communicates with the servo antenna positioning electronics is a two-way communication link. The RDASC processor sends rate command data. The antenna positioning electronics sends fault and status sensor information along with rate and velocity data to the RDASC processor.

5-7.9 PSP/RDASC INTERFACE FUNCTION.

The PSP/RDASC interface facilitates and controls data transfer between the input output controller (IOC) function, in the PSP, and the MUX and DMA buses in the RDASC processor. The Programmable Signal Processor Interface (PSPI), UD5A12A14, which is part of the PSP/RDASC interface, acts as the communication link between the PSP-IOC function and the SELCH UD5A12A15, which is also part of the PSP/RDASC interface. The SELCH is the communication link between the PSPI and the DMA and MUX buses.

5-7.9.1 Programmable Signal Processor Interface (PSPI) UD5A12A14. The PSPI board contains universal logic interface (ULI) circuitry integrated with customized design logic, a SELCH tester, and loopback testing logic. The inputs and outputs are differential, so there are two lines for each bit of information or command. Refer to section 5-6 for more information on the PSPI/IOC interface.

5-7.9.2 Selector Channel (SELCH) UD5A12A15. The SELCH is a direct memory access interface that provides a direct means of communication between input/output (I/O) device controllers and the memory system. It is connected to the memory system via the DMA bus. The I/O device controllers are connected to a SELCH by a private bus and only respond through their SELCH. The SELCH has access to three buses: the multiplexer (MUX) bus between the processor and the SELCH, the DMA bus between the memory system and the SELCH, and the private multiplexer bus between the SELCH and the I/O devices connected to the SELCH. The DMA bus interfaces with two SELCHs. SELCHs generate their own buses to communicate with their subordinate I/O devices. The subordinate I/O device for this SELCH is the PSPI.

5-7.10 CONTROL/DIAGNOSTIC SYSTEM (CDS) FUNCTION.

The CDS is a microprocessor-driven network that permits system configuration, system control, and monitoring functions during system operation. If system faults occur during system operation, they are detected by diagnostic sensors and reported to the CDS. The CDS then formats the appropriate message and issues it either directly to the terminal, or if an operating system has terminal control, the message is dispatched to the operating system which in turn forwards the message to the terminal via the peripheral interface. While the CDS is not a module or a discrete circuit, it is contained in the system. The CDS functions as a two-level master/slave network. The first level network, known as the CDS bus, carries communications between the master and its slave modules. The master, which is the CDS bus controller, is located in the CDS Master Module UD5PS5A3. The slaves which are subordinate to the master, reside on the CMM and the CPU.

5-7.10.1 Control/Diagnostic System (CDS) Operating Modes. At a given time, the CDS can function in one of two operating modes. These modes are termed interactive and passive. The mode in which the CDS exists determines if the terminal is controlled by the CDS or the operating system.

1. The interactive mode allows the CDS to accept commands (only CDS commands) from the terminal. These commands can be used to configure the system, reconfigure the system, or check the status of various system parameters. To enter this mode, the console operator must instruct the operating system to relinquish terminal control to the CDS. This is achieved by entering the appropriate command from the terminal, i.e. <Ctrl> V <Ctrl> V <Return>.

2. The passive mode is the CDSs usual operating state. In this mode, the CDS appears essentially transparent to the user though it is still active. In fact, the CDS is always active provided the system is being powered either from the AC service line or from battery back-up. While in the passive mode, the CDS cannot accept operator commands. Only the resident operating system can accept commands and these commands can only be members of the operating system's command set, not CDS commands.

5-7.10.2 Overview of CDS Hardware Elements. The CDS is composed of three hardware elements: the master, the slave, and the CDS patch panel.

1. The master (which is referred to as the CDS master) resides in the CDS Master Module UD5PS5A3. This module, aside from controlling and monitoring the power supplies, monitors the status reported by the slave modules.

2. The slaves are microprocessor-driven fault sensing circuitry located in the CMM UD5A12A6. If a board fault occurs, the slave circuitry senses the fault and logs the event in its RAM. When the slave is polled by its master, the slave forwards the information to the master via the CDS bus.

3. CDS Patch Panel UD5A15 is a printed circuit board and connector panel that interfaces the terminal to the CDS master module.

5-7.10.3 CDS Master Circuitry. The master is located on the CDS master module board. The master microprocessor communicates with external devices through its serial communications

interface and its parallel address and data lines. The address and data lines provide the microprocessor with immediate access to EPROM (program) and RAM (data) storage. During power failures, the RAM is backed-up by a lithium battery contained on the CDS master module. In addition, these lines are connected to two universal asynchronous receiver/transmitters (UARTs). These devices convert parallel data to/from serial data. Each UART operates two independent channels, thereby providing two asynchronous ports. Combined, the two UARTS enable the microprocessor to communicate with the terminal. The microprocessor's serial port is driven by an external baud rate clock (BRCLK) signal (paragraph 5-7.3 ). This port establishes a communications interface between the microprocessor and the CDS bus.

5-7.10.4 Slave Circuitry. All CDS bus slave modules (CMM and CPU) contain CDS supporting circuitry. Each CDS slave consists of an eight-bit microprocessor, EPROM for program storage and RAM for data storage. All slaves contain identical functional blocks. The only existing differences are the capacities of EPROM and RAM storage and the programs they contain. The serial port of each microprocessor is connected to the CDS bus via its sending and receiving lines. When a slave module is initialized, it determines its slot number by reading the eight-bit encoded value which is hard-strapped on the S-bus backpanel connector of the particular board. Also, since the slave's RAM is not backed-up by battery, the slave receives its configuration options from the master via the level 1 link.

5-7.10.5 CDS Bus. The CDS bus is the RS-422 communications path that connects the master to slave module located on the S-bus. This data path resides on the S-bus backpanel. Data communications are accomplished in a synchronized serial fashion. Synchronization is achieved by a 20 MHz clock signal (OSC0), which is subdivided to provide the 9600 CDS bus baud rate.

5-7.10.6 Control/Diagnostic System (CDS) Patch Panel UD5A15. The CDS patch panel is an interface board used for interconnecting system master microprocessor and terminal for the purpose of conveying CDS (maintenance port) and operating system (system port) related communications. Furthermore, it contains circuitry that converts RS-232C serial communications from the terminal to RS-422 to the master microprocessor and vice versa. The CDS patch panel contains circuitry that is capable of converting the electrical characteristics of RS-232C to/from RS-422. That is, the ±12 Vdc, single-end output of RS-232C is converted to/from the +5/0 Vdc, differential output of RS-422.

5-7.10.7 System Port/CDS Patch Panel Path. This path is used to carry all operating system (system port) I/O, including CDS-related (maintenance port) messages. The communications protocol used is RS-232C.

## 5-7.11 ON-LINE PERFORMANCE MONITORING.

Within the RDASC processor, there are two software programs running simultaneously, the operating system program OS/32 CPCI-10 and the NEXRAD Application Program CPCI-01. The OS/32 operating system has a fault monitor routine which monitors the various software routines and to a more limited extent, the operation of the processor hardware. Table 5-14 lists System Information Messages which result from this internal fault monitoring. These messages may or may not indicate a fault, but are important enough to be brought to the attention of the operator. Table 5-15 lists System Fault Messages which definitely indicate a fault.

## 5-7.12 OFF-LINE FAULT ISOLATION.

Fault isolation is performed within the RDASC processor with the aid of built-in LED indicators and off-line diagnostic test routines utilizing the operational CPU and RDA maintenance terminal (system console mode). The built-in LEDs and their significance when lit are listed in Table 5-16. The Concurrent off-line diagnostics used in RDASC fault isolation are described in section 4-6.1. Section 6-3 (Primary Fault Isolation) contains a fault isolation flow chart with accompanying instructions which explain when and how to use these diagnostic aids.

Table 5-14. System Information Messages

| SYSTEM MESSAGES | EXPLANATION |
|---|---|
| CDIR FULL-devn | Indicates the secondary directory on disk *devn* is full. See the MARK command description in Chapter 3 for required action. |
| I/O ERROR ON voln; MARK OFF AND CHECK BIT MAP ERROR ON voln; MARK OFF AND CHECK | Indicates an I/O error on *voln*, the disk volume name. An I/O error is reported to the system when reading or writing a directory block, bit map sector or volume descriptor (sector 0). A bit map error is reported to the system console in the event of a bit map error; i.e., attempting to allocate an already allocated sector or volume, or attempting to release an already released sector.<br><br>When either of these errors occurs, any operations that require bit map changes are rejected with device unavailable status. This action permits read and write of preallocated contiguous files and read-only of the preallocated index files. An attempt to allocate or delete a file is rejected with device unavailable status. The operator is advised to run a disk check on that disk. |
| OS32MTrr-uu | Is printed after system initialization. The release level is *rr*; *uu* is the update level. |
| PIC NOT ACTIVE AT ADDRESS XX | When the operating system is generated, the precision internal clock (PIC) address is specified. At operating system START time, the operating system checks to see if the PIC is operational at the address. If not, the above message is displayed. The operating system continues to run, but without the PIC. |
| POWER RESTORE - RESET PERIPHERALS | Indicates that a power fail restore sequence has taken place; no operator response is required. |
| POWER RESTORE - RESET PERIPHERALS AND ENTER GO | Indicates that a power fail restore sequence has taken place; perform any manual intervention required at the peripheral device(s) and then type GO<Return> to complete the power recovery. |

Table 5-15. System Fault Messages

| FAULT MESSAGES | INDICATION |
|---|---|
| ACCESS LEVEL ADDRESS ERROR AT *xxxxxx (YYYYYY)* MEMORY FAULT ADDRESS = *xxxxxx (YYYYYY)* | Indicates that when memory access was attempted by the current program, the memory access level of the program status word (PSW) (bits 10-11) contained a lesser value than the access level field of the appropriate segment table entry (STE). The program address is *xxxxxx* and the physical address is *YYYYYY*. The memory fault address is given on Series 3200 Processors. |
| ACCESS PRIVILEGE ADDRESS AT RR*xxxx (YYYYYY)* MEMORY FAULT ADDRESS = *xxxxxx (YYYYYY)* | Indicates that the user program tried to store into a write-protected segment, execute instructions from an execute-protected segment, or load from a read-protected segment. The program address is RR*xxxx*, the segmentation register is RR and the physical address is *YYYYYY*. The memory fault address is given on Series 3200 Processors. |
| ADDRESS FAULT IN SVC AT *xxxxxx (YYYYYY)* | Indicates that the address of supervisor call (SVC) parameter block or an address parameter in the parameter block points to a data structure that is outside the task taskid memory allocation or does not point to a data structure that is properly aligned. |
| ALIGNMENT FAULT INSTRUCTION AT *xxxxxx (YYYYYY)* MEMORY FAULT ADDRESS = *xxxxxx (YYYYYY)* | Indicates that the data instruction is not properly aligned to specific fields for fullword or halfword alignment. The program address is *xxxxxx* and the physical address is *YYYYYY*. The memory fault address is the memory location that is not properly aligned and is given on Series 3200 Processors. |
| DECIMAL OVERFLOW ERROR AT *xxxxxx (YYYYYY)* NEXT INSTRUCTION AT *xxxxxx (YYYYYY)* | Indicates that the result of a load packed decimal string as binary LPB instruction was too large to be stored as a binary number. The program address of the LPB instruction is *xxxxxx*; the physical address is *YYYYYY*. The instruction aborts and the next instruction is at *xxxxxx*. This fault occurs only on the Series 3200 Processors. |
| END OF TASK *n* | Indicates that the task taskid has ended. The end of task code in decimal is *n*. |
| EXECUTIVE PRIVILEGE ERROR AT *xxxxxx (YYYYYY)* MEMORY FAULT ADDRESS = *xxxxxx (YYYYYY)* | Indicates that an attempt was made by the current program to execute instructions for a segment that is execute-protected. The memory fault address is given on Series 3200 Processors only. |

Table 5-15. System Fault Messages (continued)

| FAULT MESSAGES | INDICATION |
|---|---|
| FIXED POINT-ZERO DIVIDE ERROR AT *xxxxxx (YYYYYY)* NEXT INSTRUCTION AT *xxxxxx (YYYYYY)* | Indicates that an attempt was made to divide by zero at location *xxxxxx* in the taskid address space (physical address *YYYYYY*). The current instruction is aborted and the next instruction is at location *xxxxxx* in the taskid address space (physical address *YYYYYY*). This error can occur only on the Series 3200 Processors. |
| FIXED POINT-ZERO OVERFLOW ERROR AT *xxxxxx (YYYYYY)* NEXT INSTRUCTION AT *xxxxxx (YYYYYY)* | Indicates that a fixed point arithmetic result, at location *xxxxxx* in the taskid address space (physical address *YYYYYY*), is too large to be represented. The instruction aborts and the next instruction is at location *xxxxxx* in the taskid address space (physical address *YYYYYY*). This error can occur only on the Series 3200 Processors. |
| FLOATING POINT - UNDERFLOW ERROR AT *xxxxxx (YYYYYY)* NEXT INSTRUCTION AT *xxxxxx (YYYYYY)* | Indicates that the result of a floating point operation is too small to be represented at location *xxxxxx* in the taskid address space (physical address *YYYYYY*). The instruction aborts and the next instruction is at location *xxxxxx* in the taskid address space (physical address *xxxxxx*). This error can occur only on the Series 3200 Processors. |
| FLOATING POINT - OVERFLOW ERROR AT *xxxxxx (YYYYYY)* NEXT INSTRUCTION AT *xxxxxx (YYYYYY)* | Indicates that the result of a floating point arithmetic operation is too large to be represented at location *xxxxxx* in the taskid address space (physical address *YYYYYY*). The instruction aborts and the next instruction is at location *xxxxxx* in the taskid address space (physical address *YYYYYY*). This error can occur only on the Series 3200 Processors. |
| FLOATING POINT - ZERO DIVIDE ERROR AT *xxxxxx (YYYYYY)* NEXT INSTRUCTION AT *xxxxxx (YYYYYY)* | Indicates that an attempt was made to perform a floating point divide by zero at location *xxxxxx* in the taskid address space (physical address *YYYYYY*). The instruction aborts and the next instruction is at location *xxxxxx* in the taskid address space (physical address *YYYYYY*). This error can occur only on the Series 3200 Processors. |
| ILLEGAL INSTRUCTION AT *xxxxxx (YYYYYY)* | Indicates that an illegal instruction fault is detected at location *xxxxxx* in the taskid address space (physical address *YYYYYY*). |
| ILLEGAL SVC - INSTRUCTOR AT *xxxxxx (YYYYYY)* SVC PARAMETER BLOCK AT *xxxxxx (YYYYYY)* | Indicates that an illegal SVC call was attempted at location *xxxxxx* in the taskid address space (physical address *YYYYYY*). The SVC parameter block is located at location *xxxxxx* in the taskid address space (physical address *YYYYYY*). |

Table 5-15. System Fault Messages (continued)

| FAULT MESSAGES | INDICATION |
|---|---|
| INVALID SEGMENT ADDRESS ERROR AT *xxxxxx (YYYYYY)* MEMORY FAULT ADDRESS = *xxxxxx (YYYYYY)* | Indicates that the task tried to address a segment outside the address space of the program. The program address is *xxxxxx* and the physical address is *YYYYYY*. The memory fault address is given on Series 3200 Processors only. |
| I/O-ERR TYPE=*xxxx* SEGNAME=*YYYY* SEGTYPE=2222 | Indicates that an input/output (I/O) error type *xxxx* was encountered while trying to write the segment named *YYYY* to the roll volume. Task space is needed to load or roll in task volume. Task space is needed to load or roll in task taskid. Segment *YYYY* is set as nonrollable and the write error flag is set in the segment descriptor entry (SDE). To ensure full integrity of the segment, reload the pertinent module(s). |
| MEMORY ERROR ON DATA FETCH AT *xxxxxx (YYYYYY)* MEMORY FAULT ADDRESS = *xxxxxx (YYYYYY)* | Indicates that an attempt was made to retrieve or to load data from a failing memory area on Series 3200 Processors. If affected memory is within task space and the operating system has memory diagnostic support, the affected page is automatically marked off and the following message is displayed:<br>AFFECTED MEMORY PAGE MARKED OFF AT *xxxxxx (YYYYYY)* |
| MEMORY ERROR ON INSTRUCTION FETCH AT *xxxxxx (YYYYYY)* MEMORY FAULT ADDRESS=*xxxxxx (YYYYYY)* | Indicates that an attempt was made to execute an instruction from a failing memory area on Series 3200 Processors. If affected memory is within task space and the operating system has memory diagnostic support, the affected page is automatically marked off and the following message is displayed:<br>AFFECTED MEMORY PAGE MARKED OFF AT *xxxxxx (YYYYYY)* |
| NON-EXISTENT SEGMENT ERROR (PST) AT *xxxxxx (YYYYYY)* MEMORY FAULT ADDRESS=*xxxxxx (YYYYYY)* | Indicates that an attempt was made to access a memory location greater than the maximum valid program address; i.e., an attempt to access a memory location outside of task space. The program address is *xxxxxx* and the physical address is *YYYYYY*. The memory fault address is given on Series 3200 Processors. |

Table 5-15. System Fault Messages (continued)

| FAULT MESSAGES | INDICATION |
|---|---|
| NON-EXISTENT SEGMENT ERROR (PST) AT *xxxxxx (YYYYYY)* MEMORY FAULT ADDRESS=*xxxxxx (YYYYYY)* | Indicates that an attempt was made to access a memory location greater than the maximum valid program address; i.e., an attempt to access a memory location outside of task space. The program address is *xxxxxx* and the physical address is *YYYYYY*. The memory fault address is given on Series 3200 Processors. |
| NON-EXISTENT SEGMENT ERROR (SST) AT *xxxxxx (YYYYYY)* MEMORY FAULT ADDRESS=*xxxxxx (YYYYYY)* | Indicates that the current program has made reference to a non-existent segment in the shared segment table (SST). The program address that caused the fault is *xxxxxx*; the physical address is *YYYYYY*. If the non-existent segment is loaded, the instruction that caused the fault can be reexecuted. The memory fault address appears on the Series 3200 Processors. |
| PACKED FORMAT-SIGN ERROR AT *xxxxxx (YYYYYY)* MEMORY FAULT ADDRESS= *xxxxx (YYYYYY)* | Indicates that an illegal sign digit was detected in a packed decimal number at location *xxxxxx* in the taskid address space (physical address *YYYYYY*) for Series 3200 Processors. |
| PACKED FORMAT-DATA ERROR AT *xxxxxx (YYYYYY)* MEMORY FAULT ADDRESS= *xxxxxx (YYYYYY)* | Indicates that a data error was detected in a packed decimal number at location *xxxxxxx* in the taskid address space (physical address *YYYYYY*) for Series 3200 Processors. |
| READ PRIVILEGE ADDRESS ERROR AT *xxxxxx (YYYYYY)* MEMORY FAULT ADDRESS=*xxxxxx (YYYYYY)* | Indicates that an attempt was made by the current program to read from a segment that is read-protected. The memory fault address is given for Series 3200 Processors. |
| SEGMENT LIMIT ADDRESS ERROR AT RR*xxxx* (*YYYYYY*) MEMORY FAULT ADDRESS=*xxxxxx (YYYYYY)* | Indicates that the task attempted to access an address outside allowable limits for one of its segments. The program address is RR*xxxx*, segmentation register is RR and physical address is *YYYYYY*. The memory fault address is given on Series 3200 Processors only. |

Table 5-15. System Fault Messages (continued)

| FAULT MESSAGES | INDICATION |
|---|---|
| SVC ADDRESS ERROR-INSTRUCTION AT *xxxxxx (YYYYYY)* SVC PARAMETER BLOCK AT *xxxxxx (YYYYYY)* | Indicates that the address of the SVC parameter block at *xxxxxx* in the taskid address space (physical address *YYYYYY*) was incorrect. The SVC parameter block must be on a fullword boundary. |
| TASK PAUSED | Indicates that the task taskid paused. The pause results from an SVC2 code 1 or the operator PAUSE command. |
| UNDEFINED DATA FORMAT FAULT AT *xxxxxx (YYYYYY)* MEMORY FAULT ADDRESS=*xxxxxx (YYYYYY)* | Indicates that an undefined data format or alignment fault was detected at location *xxxxxx* in the taskid address space (physical address *YYYYYY*) for Series 3200 Processors. |
| WRITE PRIVILEGE ADDRESS ERROR AT *xxxxxx (YYYYYY)* MEMORY FAULT ADDRESS=*xxxxxx (YYYYYY)* | Indicates that an attempt was made by the current program to write to a segment that is write-protected. The memory fault address is given for Series 3200 Processors. |
| *taskid*> | Indicates that an SVC1 read to console device from task *taskid*. Data should be entered immediately to avoid blocking the console. |

Table 5-16. RDASC LEDs

| Description | Significance |
|---|---|
| LED on ODC UD5A12A12 | This LED is lit on power up and extinguishes when ODC on board diagnostics are completed successfully. The LED flickers when data is being passed from ODC to storage medium device. |
| LED 1 on SELCH (F0-UD5A12A13) (F1-UD5A12A15) | Indicates that SELCH is selected for a DMA transfer. |
| LED 2 on SELCH | Indicates that a parity fail is detected on transferred data. |

# Section 5-8. VMEbus to Concurrent I/O Bus Interface Functional Block Diagram Description

## 5-8.1 GENERAL DESCRIPTION.

The VMEbus to Concurrent I/O bus interface (VCI) provides the RDA Status and Control (RDASC) processor's M3200 CPU with access to the wideband communications function via a VMEbus. The VCI subsystem consists of a VMEbus to Concurrent I/O Bus Interface Board (VCI-C) UD5A12A18 that interrelates with the processor, a VMEbus to Concurrent I/O Bus Board (VCI-V) UD5A1A1 that interrelates with the VMEbus, a cable bus that connects the two boards, and wideband boards that provide the link between the VMEbus and the wideband communications function.

The VCI-C board, UD5A12A18, functions as a switcher, connecting either the RDASC processor's MUX bus to the cable bus or the DMA bus to the cable bus. Use of the DMA bus allows large amounts of wideband data to be directly input into the memory of the RDASC processor's M3200 CPU, directed by commands from the CPU sent over the MUX bus. The board contains an on-board microprocessor that performs control and diagnostic operations. It reports diagnostic test results back to the M3200 CPU via the MUX bus. The VCI-C board also reconfigures data arriving from the 32-bit VMEbus (via the cable bus) so that it can be placed on the 16-bit DMA bus.

The VCI-V board, UD5A1A1, contains a VMEbus interface controller (VIC) chip, which controls the master/slave architecture of the VMEbus. Arbiter circuitry on the VCI-V board receives VMEbus access requests from peripheral wideband boards connected to the VMEbus. The circuitry determines which peripheral should gain master control of the bus. Any wideband board can acquire the bus (become master) to transfer data to the M3200 CPU via the VCI-V board (which would become slave). The VCI-V board can also become master of the VMEbus to transfer data from the CPU to a particular wideband board.

**NOTE**

This section refers to the RDADP as UD5, the Receiver as UD4, the Transmitter as UD3, and the Waveguide Pressurization Unit as UD6. Unless otherwise specified, the information also applies to redundant systems UD105, UD104, UD103, and UD106.

## 5-8.2 VCI-C BOARD.

The VCI-C board (Figure 5-22) contains a microprocessor with accompanying EPROM, SRAM, and EEPROM; cross-bar switches for bus connections; and interfaces for the cable bus, the MUX bus, and the DMA bus. The microprocessor performs power-up diagnostics of the VCI-C board and presents the results to the M3200 processor when interrogated. It also performs MUX bus command processing and interrupt queue handling. The microprocessor can directly access the VMEbus and the DMA bus. The VMEbus is accessed with an external page memory table. The DMA bus fits into an allocated memory space. Access of the DMA bus allows the microprocessor to assist in diagnostic tests of this bus. The microprocessor accesses EPROM which contains the power-up test code and the VCI operational code. The contents of the EPROM are copied to the

SRAMs for execution. The SRAM also stores the microprocessor's program and data. An EEPROM is used to store configuration information at power down.

The cross-bar switches connect the following buses together:

- Cable bus to DMA bus
- Local CPU bus to DMA bus
- MUX bus to local CPU bus
- MUX bus to cable bus

The cross-bar switches allow two pairs of buses to communicate at the same time. For example, the cable bus can be communicating with the DMA bus at the same time that the MUX bus is communicating with the local CPU bus. If two buses request communication with the same bus at the same time, the cross-bar switches arbitrate and grant only one bus access. After this bus has completed its data transfer, the other bus is allowed access.

The DMA bus interface allows the VMEbus to access the DMA bus of the RDASC processor. The DMA bus interface contains a 2K-word FIFO register that is used to smooth peak rate transfers between the two buses, necessary because the DMA bus peak rate is about 5 MB per second and the VMEbus peak rate is about 40 MB per second. The VMEbus interface enables the VMEbus to access the 16-bit DMA bus either 16 bits or 32 bits at a time. When the VMEbus transfers data to the DMA bus 32 bits at a time, the cable bus interface packs and unpacks the data and presents it in the correct order to the DMA interface.

The local CPU bus is the 32-bit address and 32-bit data bus of the on-board microprocessor. The address and data buses connect directly to the cross-bar switches. The address bus can be driven directly by the cross-bar switches, as it is when the MUX bus performs an access of the on-board microprocessor's SRAM.

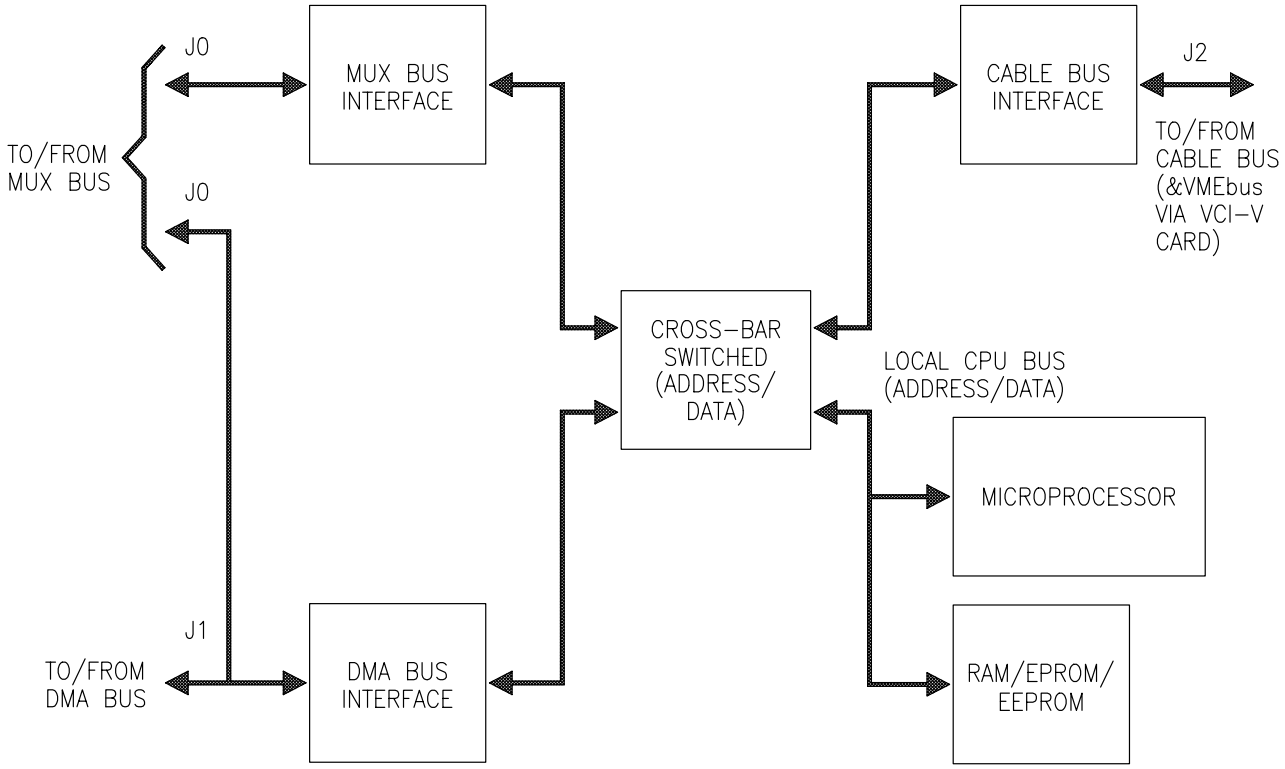


NX1859

Figure 5-22. VCI-C Board Block Diagram

### 5-8.3 VCI-V BOARD.

The VCI-V board (Figure 5-23) contains a cable bus interface, a VME interface chip (VIC), and additional data and address buffers for the VMEbus. The VIC is the system controller of the VMEbus. It performs the following functions:

- Receives requests from peripherals for master control of VMEbus
- Determines master/slave control of the VMEbus
- Generates interrupts to the VMEbus
- Receives and handles interrupts from the VMEbus
- Drives the lower address (A1-A7) and data (D0-D7) lines

The additional data and address buffers drive the upper 24 address and data lines of the 32-bit VMEbus.

### 5-8.4 CABLE BUS.

The cable bus has 32 multiplexed address and data lines and 18 control lines. The control lines are generated by either the VCI-C or the VCI-V card.

The following are generated by the VCI-V card:

- Cable Power Indicator
- Cable Bus Deadlock Flag
- Cable Bus Request
- Interrupt Level (3-bit signal)
- Burst Transfer Flag

The following are generated by the VCI-C card:

- Interrupt Acknowledge Flag
- Cable Bus Grant
- Request for VME arbitration

The following control lines are generated by either the VCI-C or VCI-V card, depending on which has been granted control of the cable bus (master) and which is not in control (slave), as determined by the VCI-V cards VIC:

- Address Strobe (cable bus master)
- Data Strobe (cable bus master)
- Read/Write Flag (cable bus master)

- Transfer Size Bits (cable bus master)
- Data Transfer Size Acknowledge lines (cable bus slave)
- Bus Error (cable bus slave)

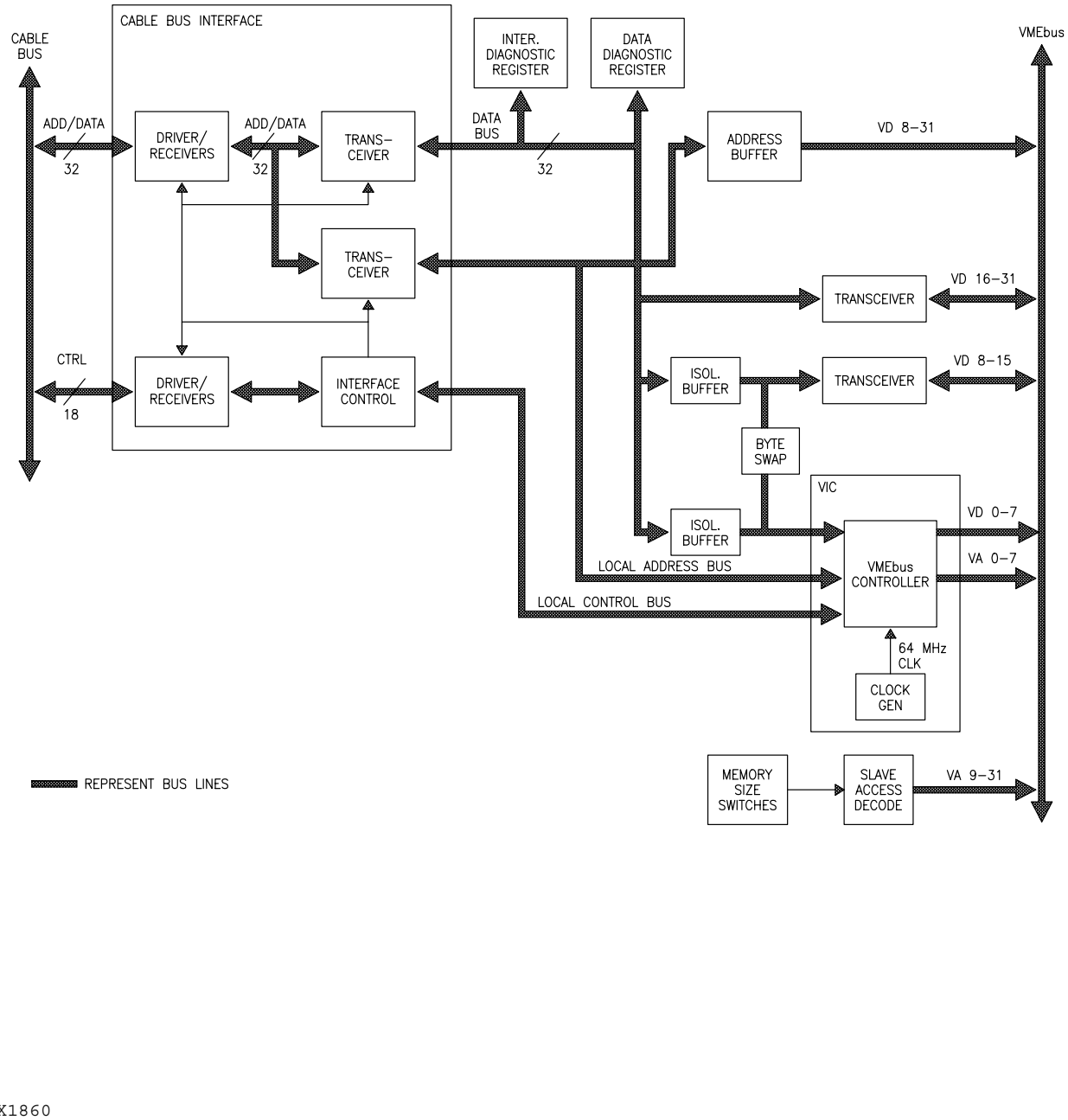


NX1860

Figure 5-23. VCI-V Board Block Diagram

## 5-8.5 WIDEBAND COMMUNICATIONS INTERFACE.

The Wideband Communications Interface (Figure FO5-12) consists of wideband boards that reside in the VME chassis. Each wideband board (Figure 5-24) provides full-duplex transmission between the VCI and the wideband transmission medium. In NWS redundant systems (Figure FO5-12), the wideband communications interface of channel 2 also consists of a Wideband Communications Switch UD5A19. This switch connects the wideband board of either channel 1 or channel 2 to the wideband transmission medium. In both single channel and dual channel systems, each wideband board performs the following functions:

- Formats data to conform to the high-level data link control (HDLC) protocol and the international telegraph and telephone consultative committee (CCITT) X.25 network protocol
- Provides T1 framing and error checking
- Generates T1 clock for transmitting data to the T1 links
- Recovers T1 clock from received data
- Supplies testing, diagnostics, and operational status for front panel displays
- Converts data to a DSX-1 bipolar bit stream for output to the T1 links, at a rate of 1.544 MB/sec

Each wideband board contains a 24-channel HDLC controller that formats data to conform with the HDLC protocol. Under the HDLC protocol, data is formed into packets before being applied to the packet-switched T1 network defined by the X.25 protocol. An HDLC packet (Figure 5-25) contains an 8-bit starting flag; an 8-bit address; and 8-bit control field; an information field consisting of 8-bit bytes, 16-bit words, or 32-bit longwords; a 16-bit frame check sequence (FCS); and an 8-bit ending flag. The X.25 protocol provides flow control for information, and commands and responses between the two communicating devices.

The HDLC controller transmits and receives 24-64KB channel data in a time-multiplexed manner via a serial link to the T1 interface section. Each channel can be individually assigned as an HDLC channel. The HDLC controller performs zero-bit insertion and deletion to produce a bipolar bit stream output to the T1 interface section. The bit stream contains alternating positive and negative pulses to represent ones and no pulses to represent zeroes. The positive and negative pulses alternate in sign to eliminate DC components. DSX-1 defines the pulse shape, amplitude, and pulse rate into a 100-ohm load. A zero (0) bit is defined as 0.0 volts over a pulse period of 1/1.544 MHz. A one (1) bit is defined as a positive or negative pulse over 50 percent of the pulse period. DSX-1 requires a minimum of 12.5 percent average ones and a maximum of 15 consecutive zeros.

To meet the DSX-1 requirements, the HDLC controller applies a bit stuffing technique to the data. Under this technique, a zero bit is inserted after five continuous ones are encountered anywhere between the starting and ending flags of the frame. With this scheme, the bit stream is guaranteed not to have more than six continuous ones (but may have more than 15 zeros). The serial bit stream is then inverted, guaranteeing that not more than six continuous zeros exist, thereby meeting the 12.5 percent average ones requirement of DSX-1. The inverted serial bit stream is sent to the T1

interface section where a T1 framer device provides super frame (SF), extended super frame (ESF), and SLC-96 frame formats and bit robbed and common channel signaling. Line drivers in the line interface section transmit the T1 signal over the DSX-1 interface to its destination. Receiver logic at the destination removes the ones that were introduced during bit stuffing. Transmission over the DSX-1 interface is accomplished by one of four means:

- Shielded, twisted pair cable to another wideband card (hardwired) which is used when the distance between the RDA and RPG is less than 400 feet.
- Shielded, twisted pair cable to a wideband card with a channel service unit (CSU) placed in the line at both the RPG and RDA end. This method is used when the distance between the RPG and the RDA is from 400 to 3,000 feet. It is considered a private T1 line.
- Shielded, twisted pair cable with CSUs, where the twisted pair line between the two CSUs is leased from the telephone company. It is considered a Telco T1 line.
- 20-foot twisted pair cable to a microwave line-of-sight transceiver (MLOS).

The HDLC controller also interfaces with a microprocessor kernel on the wideband board through 64KB of shared RAM memory. Shared memory is used for command, handshaking, and status reporting. The microprocessor kernel consists of a microprocessor coupled with a multi-function peripheral (MFP) device, PROM, and RAM. The MFP handles interrupts and provides a single channel, full-duplex, universal synchronous/asynchronous receiver transmitter (USART).

The line interface section receives a T1 data stream of the same frequency. The card detects carrier errors, framing errors, signaling bit errors, and remote alarms on the incoming T1 stream. It also detects slips which occur when the rate at which data is sent on the incoming stream is different than the rate of the outgoing stream.

The wideband board's interface to the RDASC processor is through the VMEbus interface section. A VMEbus interrupter section handles incoming VMEbus interrupts and generates outgoing interrupts in accordance with VMEbus specifications. The VMEbus interface section supports master/slave operation of the VMEbus. To send information on the VMEbus to the RDASC processor, the wideband card must send a request to the system controller on the VCI-V card to become master of the VMEbus. Circuitry in the VMEbus interface section enables the wideband card to maintain master control of the VMEbus until the on-board microprocessor determines that access is no longer necessary because the message has been sent or an interrupt has come in from another card.

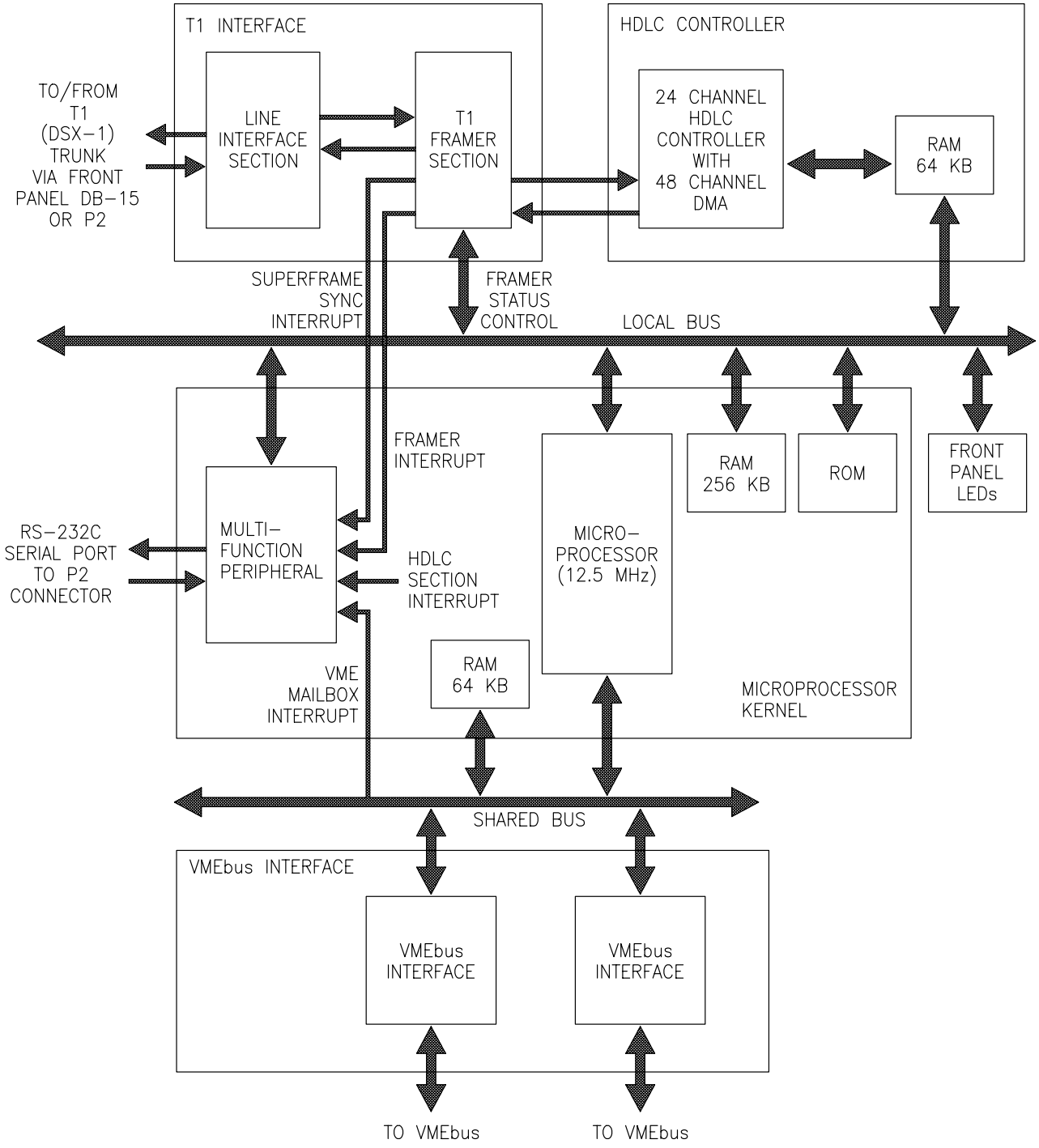


Figure 5-24. Wideband Board Detailed Block Diagram

For NWS redundant systems (Figure FO5-12), the DSX-1 interface is accomplished with shielded, twisted-pair cable and CSUs. This T1 line is generated only in channel 2. Wideband Communications Switch UD5A19 connects the wideband boards of channel 1 or 2 to CSU UD5A18. The operator controls switching between channels through commands entered at the remote RDA maintenance terminal. When channel 1 is selected as the active channel, the CHAN 1/2 CNTRL signal is output at a high logic level. It energizes the coil of Wideband Communications Switch UD5A19, whose contacts switch to position A. The wideband board of channel 1 is connected to CSU UD5A18. When channel 2 is selected as the active channel, the CHAN 1/2 CNTRL signal is output at a low logic level. This deenergizes the Wideband Communications Switch UD5A19, whose contacts switch to position B. The wideband board of channel 2 is connected to CSU UD5A18.

| FLAG | ADDRESS | CONTROL | INFORMATION | FCS | FLAG |
|---|---|---|---|---|---|
| Ø111111Ø | 8 BITS | 8 BITS | ########### | 16 BITS | Ø111111Ø |

FLAG = FLAG SEQUENCE
ADDRESS = SECONDARY STATION ADDRESS FIELD
CONTROL = CONTROL FIELD
INFORMATION = INFORMATION FIELD
FCS = FRAME CHECK SEQUENCE
### = UNSPECIFIED NUMBER OF BITS WHICH MAY BE A NUMBER OF 8-BIT BYTES, 16-BIT WORDS, OR 32-BIT LONGWORDS

Figure 5-25. HDLC Frame Structure

# Section 5-9. RDA Status and Control Interface Functional Block Diagram Description

## 5-9.1 INTRODUCTION.

This section discusses the RDASC interface functions of the data acquisition interface at the functional block diagram level. The data acquisition interface functions and reference diagrams discussed in this section are listed as follows:

- Data Acquisition Interface Functional Description (Figure FO5-13)
- RDASC/DAU Command Data Interface Functional Description (Figure FO5-14)
- Redundant RDASC/DAU Command Data Interface Functional Description (Figure FO5-15)
- Redundant RDASC Interprocessor Link (Figure FO5-31)
- DAU/RDASC Status Data Interface Functional Description (Figure FO5-16)
- Discrete Status Data Monitoring Functional Description (Onan) (Figure FO5-17)
- Discrete Status Data Monitoring Functional Description (Kohler) (Figure FO5-18)
- Redundant Discrete Status Data Monitoring Functional Description (Figure FO5-19)
- Analog Status Data Monitoring Functional Description (Figure FO5-20)
- Redundant Analog Status Data Monitoring Functional Description (Figure FO5-21)

These functions are discussed in paragraphs 5-9.2 through 5-9.7, respectively. On-line performance monitoring and off-line diagnostic testing are discussed in paragraphs 5-9.8 and 5-9.9.

**NOTE**

This section refers to the RDADP as UD5, the Receiver as UD4, the Transmitter as UD3, and the Waveguide Pressurization Unit as UD6. Unless otherwise specified, the information also applies to redundant systems UD105, UD104, UD103, and UD106.

5-9.1.1 Data Acquisition Interface Overview. The data acquisition interface function is a two-way communication link between the RDASC processor and the DAU UD5A3. It gathers fault alarms and status data from the transmitter, the antenna positioning electronics, the system microwave, the receiver, the RDA environmental sensors, and RDA utilities. The data may be in one of three forms: analog, parallel binary words, or discrete status bits. All this data is multiplexed together and sent via an RS-232 serial link to the RDASC. The RDASC also sends serial data to the data acquisition interface. This serial data contains mode commands for the antenna positioning electronics, the transmitter, and the auxiliary power generation system.

5-9.1.2 Purpose. This interface provides the means of transmitting status and built-in-test (BIT) information from the DAU to the RDASC processor and of transmitting commands and a request for data to the DAU from the RDASC processor. The status and BIT information is data gathered by the DAU from the transmitter, the tower/utilities, and also includes various RDA power supply voltages.

5-9.1.3 Interface Description. The interface is a serial EIA RS-232 operating asynchronously full duplex at 19,200 baud. The DAU and RDASC processor are connected directly without the use of modems. The RDASC processor side of the interface utilizes an 8-line multiplexer board. Other RS-232 interchange circuit signals are not required since the interface is asynchronous and modems are not used.

## 5-9.2 DATA ACQUISITION INTERFACE FUNCTIONAL DESCRIPTION.

The data acquisition interface function (containing the DAU) links the RDASC to various functions of the RDA. The interface (Figure FO5-13) contains the following functions:

- RDASC/DAU Command Data Interface
- DAU/RDASC Status Data Interface
- Discrete Status Data Monitoring
- Analog Status Data Monitoring

5-9.2.1 RDASC/DAU Command Data Interface. The RDASC/DAU command data interface function receives commands and control data in the form of the RS-232 TX line from the peripheral interface of the RDASC. This data is used to control operation of the antenna positioning electronics, the transmitter, the operation of the DAU, and tower utilities. Input to the RDASC/DAU command data interface from the RDASC processor interface is at the asynchronous reception and demultiplexing circuits. The processor communicates with the DAU using command and data bytes. Table 5-17 specifies the formats to be used. Note that the command byte format has a header following the start bit which begins 1,1 or 0,1 and the data byte format begins with 1,0.

Table 5-17. RDASC Processor to Data Acquisition Unit

| | Command Byte | | | |
|---|---|---|---|---|
| | **Reset DAU** | **Status Data Request** | **Receive Data Message Initialization** | **Data Byte** |
| Start | 0 | 0 | 0 | 0 |
| | 1 | 0 | 0 | 1 |
| | 1 | 1 | 1 | 0 |
| | 0 | 0 | 1 | D0 |
| | X | X | X | D1 |
| | X | X | X | D2 |
| | X | X | X | D3 |
| | X | X | X | D4 |
| | X | X | X | D5 |
| Parity* | (0,1) | (0,1) | (0,1) | (0,1) |
| Stop | 1 | 1 | 1 | 1 |

- - - - -
* Odd parity is used.

5-9.2.1.1 The command RESET DAU is transmitted at turn-on to initialize the DAU. It may be transmitted at any time to reset the DAU: for example, after a power interruption. STATUS DATA REQUEST is a command from the processor for the DAU to collect and transmit status data to the processor. The DAU responds to this command with one complete set of status data. The command RECEIVE DATA MESSAGE INITIALIZATION informs the DAU that data is to be transmitted from the processor to the DAU. After the command, each data byte is transmitted in sequence until all data bytes have been transmitted. Bytes may be transmitted in one continuous stream or at intervals. (It is possible to send a STATUS DATA REQUEST command between data bytes.) Transmissions from the processor to the DAU may occur at any time, but are normally sent about once per second. Each data byte transmitted from the processor to the DAU contains six bits of data. Table 5-18 lists the signals, byte number, bit number, and destination (for reference). Note that a value of “1” means that the function is active.

Table 5-18. Processor to DAU Data

| **Signal** | **Byte/Bit** | **Destination** |
|---|---|---|
| Spare | 0/D0 | |
| Spare | 0/D1 | |
| Spare | 0/D2 | |
| Spare | 0/D3 | |
| Spare | 0/D4 | |
| Spare | 0/D5 | |

Table 5-18. Processor to DAU Data (continued)

| Signal | Byte/Bit | Destination |
|---|---|---|
| Spare | 1/D0 | |
| Spare | 1/D1 | |
| Audible Alarm Control-1 | 1/D2 | Triggers Audible Alarm |
| Audible Alarm Control-2 | 1/D3 | Triggers Audible Alarm |
| HV ON CMD | 1/D4 | Transmitter via current source |
| Antenna CMD | 1/D5 | Transmitter via RS-422 |
| Channel 2 CMD | 2/D0 | RS-422 output for dual channel option |
| Pedestal Operate | 2/D1 | Relay closure to Pedestal |
| Spare Lamp Driver | 2/D2 | |
| Switch to Diesel Generator | 2/D3 | Relay closure to tower/utilities |
| Switch to Utility Power | 2/D4 | Relay closure to tower/utilities |
| Audible Alarm | 2/D5 | Audible Alarm Enable |
| Spare | 3/D0 | |
| Spare | 3/D1 | |
| Spare | 3/D2 | |
| Spare | 3/D3 | |
| Spare | 3/D4 | |
| Spare | 3/D5 | |

5-9.2.1.2 The asynchronous reception and demultiplexing circuits also receive the clock signals from the master timing circuits in the DAU/RDASC interface function and outputs the generator/utility switching commands, which provide relay closures to the auto transfer switch, for power source selection via the relay driver logic, and audible alarm signals to the audible alarm logic circuits. The audible alarm output signal is generated by the audible alarm logic circuits on command from the processor whenever the application software detects a system alarm. This signal is sent to the audible alarm on the RDA Maintenance Panel UD5A2.

5-9.2.1.3 The time-out interlock logic circuits send control signals to the transmitter and antenna positioning electronics.

5-9.2.1.4 Status signals to the status indicators and alarms indicates power source, availability of power or problems with the RDASC processor. These status signals are provided by inputs to the relay driver logic from the time-out interlock circuits and discrete data bits from the discrete status data monitoring function.

5-9.2.1.5 Transmitter control signals of circulator overtemp, pressurization faults, waveguide switch interlock, and antenna interlock are provided to the transmitter control and monitoring functions for status monitoring and control over waveguide switch activation.

5-9.2.2 DAU/RDASC Status Data Interface. The DAU/RDASC interface multiplexes the discrete signals together, combines them with the A/D data word and converts the result to a serial (RS-232 TX) bus to be transmitted to the peripheral interface of the RDASC. The DAU responds to a status data request from the processor by sampling transmitter, tower/utilities (T/U), and other data and transmitting it to the processor. The multiplexed transmitter data is transmitted first, then discrete transmitter data, COHO/CLOCK, UART (universal asynchronous receiver transmitter) ERR (error), discrete T/U data, analog T/U data, two analog RF power signals, and finally, power supply voltages. Table 5-19 shows the format of each byte of data sent to the processor.

Table 5-19. DAU to Processor Data

| | **Data Byte** |
|---|---|
| Start | 0 |
| | D0 |
| | D1 |
| | D2 |
| | D3 |
| | D4 |
| | D5 |
| | D6 |
| | D7 |
| Parity* | (0,1) |
| Stop | 1 |

- - - - -

* Odd parity is used.

5-9.2.2.1 Prior to the start of transmission, the BA (transmitted data) line is held at the 1 level (low). When data transmission begins, the start bit causes the line to go to a 0 (high). The start bit is followed by eight data bits (0-7), a parity bit, and a stop bit (1). Data is transmitted to the processor from the DAU only after the processor has sent a status data request to the DAU.

5-9.2.2.2 Table 5-20 lists the discrete signals, byte numbers and bit numbers transmitted from the DAU to the processor. Table 5-21 lists the analog signals, byte numbers and bit numbers, transmitted to the processor. Table 5-22 provides units, range, and accuracy/precision of the analog signals.

5-9.2.2.3 The DAU/RDASC status data interface contains the master timing, reception and selection circuitry, UART transmitter control and strobe generation, and RS-232 asynchronous transmission circuits (Figure FO5-13). These circuits combine to select, enable, and transmit the status data to the RDASC processor and also sends the TX STATUS WORD SELECT signals to the transmitter control and monitoring circuits. The master timing produces the clock and timing signals for the DAU/RDASC status data interface and RDASC/DAU command data interface.

5-9.2.2.4 The reception and selection circuitry receives inputs from the discrete status monitoring function, analog status monitoring function, and transmitter status data, along with status alarm signals from the transmitter and the COHO fault (COHO/CLOCK) signal from the receiver. The timing and strobe inputs allow selection of the data to be sent out to the RDASC processor via the RS-232 asynchronous transmission circuits. The UART transmitter control and strobe generation circuits develop the control and enabling signals for the selection circuitry and asynchronous transmission circuitry.

5-9.2.2.5 The TX STATUS WORD SELECT output is used to select the appropriate transmitter status data for monitoring purposes.

Table 5-20. DAU to Processor Data (Discrete)

| Discrete Signals | Byte/Bit | Function Equals |
|---|---|---|
| Filament PS OFF | 0/D0 | 1 = Off |
| Klystron Preheat | 0/D1 | 1 = Preheat |
| Transmitter Not Available | 0/D2 | 1 = Not available |
| W/G Switch Dummy Load | 0/D3 | 1 = Dummy load |
| W/G PFN Transfer Interlock | 0/D4 | 1 = Interlock |
| Maintenance Mode/No Control | 0/D5 | 1 = Maint. Mode |
| Maintenance Work Required | 0/D6 | 1 = Work required |
| PFN Switch Long Pulse | 0/D7 | 1 = Long Pulse |
| + 5 Vdc PS Summary Fault | 1/D0 | 1 = Fault or Failure |
| +15 Vdc PS Summary Fault | 1/D1 | 1 = Fault or Failure |
| +28 Vdc PS Summary Fault | 1/D2 | 1 = Fault or Failure |
| -15 Vdc PS Summary Fault | 1/D3 | 1 = Fault or Failure |
| +45 Vdc PS Summary Fault | 1/D4 | 1 = Fault or Failure |
| Filament PS Voltage | 1/D5 | 1 = Fault or Failure |
| Vacuum Pump PS Voltage | 1/D6 | 1 = Fault or Failure |
| Focus Coil PS Voltage | 1/D7 | 1 = Fault or Failure |
| Circulator Over Temperature | 2/D0 | 1 = Fault or Failure |
| Spectrum Filter Low Pressure* | 2/D1 | 1 = Fault or Failure |
| W/G Arc/VSWR (summary) | 2/D2 | 1 = Fault or Failure |
| Cabinet Interlock | 2/D3 | 1 = Fault or Failure |
| Cabinet Air Temperature | 2/D4 | 1 = Fault or Failure |
| Cabinet Airflow | 2/D5 | 1 = Fault or Failure |

- - - - -

* This indication applies only when the spectrum filter is present.

** AC units #3 and #4 may not exist.

*** This function is not normally included in the configuration and the signal will be strapped in the “NOT” state (i.e., to “0” if the function equals “1”).

**** Receiver Not Connected to Antenna exists only in the redundant configuration.

Table 5-20. DAU to Processor Data (Discrete) (continued)

| Discrete Signals | Byte/Bit | Function Equals |
|---|---|---|
| Transmitter Spare | 2/D6 | - |
| Transmitter Spare | 2/D7 | - |
| Modulator Overload | 3/D0 | 1 = Fault or Failure |
| Modulator Inverse Current | 3/D1 | 1 = Fault or Failure |
| Modulator Switch Failure | 3/D2 | 1 = Fault or Failure |
| Main Power Overvoltage | 3/D3 | 1 = Fault or Failure |
| Flyback Charger Failure | 3/D4 | 1 = Fault or Failure |
| Inverse Diode Current/UV | 3/D5 | 1 = Fault or Failure |
| Trigger Amplifier Failure | 3/D6 | 1 = Fault or Failure |
| Transmitter Spare | 3/D7 | - |
| Transmitter Overvoltage | 4/D0 | 1 = Fault or Failure |
| Transmitter Overcurrent | 4/D1 | 1 = Fault or Failure |
| Focus Coil Current | 4/D2 | 1 = Fault or Failure |
| Focus Coil Airflow | 4/D3 | 1 = Fault or Failure |
| Oil Temperature (Transmitter) | 4/D4 | 1 = Fault or Failure |
| PRF Limit (Summary) | 4/D5 | 1 = Fault or Failure |
| Oil Level (Transmitter) | 4/D6 | 1 = Fault or Failure |
| Battery Charging | 4/D7 | 0 = Charging |
| Klystron Overcurrent | 5/D0 | 1 = Fault or Failure |
| Klystron Filament Current | 5/D1 | 1 = Fault or Failure |
| Klystron Vacuum Pump Current | 5/D2 | 1 = Fault or Failure |
| Klystron Air Temperature | 5/D3 | 1 = Fault or Failure |
| Klystron Airflow | 5/D4 | 1 = Fault or Failure |
| ′One′ Test Bit 5 | 5/D5 | 1 = OK or normal |
| ′One′ Test Bit 6 | 5/D6 | 1 = OK or normal |
| ′One′ Test Bit 7 | 5/D7 | 1 = OK or normal |
| ′One′ Test Bit 0 | 6/D0 | 1 = OK or normal |
| ′One′ Test Bit 1 | 6/D1 | 1 = OK or normal |
| ′One′ Test Bit 2 | 6/D2 | 1 = OK or normal |
| ′One′ Test Bit 3 | 6/D3 | 1 = OK or normal |
| ′One′ Test Bit 4 | 6/D4 | 1 = OK or normal |

- - - - -

* This indication applies only when the spectrum filter is present.

** AC units #3 and #4 may not exist.

*** This function is not normally included in the configuration and the signal will be strapped in the “NOT” state (i.e., to “0” if the function equals “1”).

**** Receiver Not Connected to Antenna exists only in the redundant configuration.

Table 5-20. DAU to Processor Data (Discrete) (continued)

| Discrete Signals | Byte/Bit | Function Equals |
|---|---|---|
| Modulator Switch Maintenance | 6/D5 | 1 = Fault or Failure |
| Post Charge Regulator Maintenance | 6/D6 | 1 = Fault or Failure |
| WG, Pressure/Humidity | 6/D7 | 1 = Fault or Failure |
| ′Zero′ Test Bit 0 | 7/D0 | 0 = OK or normal |
| ′Zero′ Test Bit 1 | 7/D1 | 0 = OK or normal |
| ′Zero′ Test Bit 2 | 7/D2 | 0 = OK or normal |
| ′Zero′ Test Bit 3 | 7/D3 | 0 = OK or normal |
| ′Zero′ Test Bit 4 | 7/D4 | 0 = OK or normal |
| ′Zero′ Test Bit 5 | 7/D5 | 0 = OK or normal |
| ′Zero′ Test Bit 6 | 7/D6 | 0 = OK or normal |
| ′Zero′ Test Bit 7 | 7/D7 | 0 = OK or normal |
| HV OFF | 8/D0 | 1 = Off |
| TX Recycle | 8/D1 | 1 = Recycle |
| TX Inop | 8/D2 | 1 = Inoperable |
| COHO/CLOCK | 8/D3 | 1 = Fault or Failure |
| UART Error | 8/D4 | 1 = Fault or Failure |
| Spare | 8/D5 | - |
| Spare | 8/D6 | - |
| Spare | 8/D7 | - |
| AC Unit #1 Compressor Shut OFF | 9/D0 | 1 = Off |
| AC Unit #2 Compressor Shut OFF | 9/D1 | 1 = Off |
| Generator Maintenance Required | 9/D2 | 0 = Maint Req |
| Auto Transfer SW on Utility Power | 9/D3 | 0 = Utility |
| Battery Voltage Low | 9/D4 | 0 = Low |
| Generator Engine Malfunction | 9/D5 | 0 = Fault or Failure |
| TPS | 9/D6 | 1 = Off |
| TPS (Reserved) | 9/D7 | 1 = Off |
| Generator Selector SW Not in Automatic | 10/D0 | 0 = Not in Auto |
| Generator Voltage and Frequency Available | 10/D1 | 1 = Available |
| Aircraft Hazard Light Failure | 10/D2 | 0 = Fault or Failure |
| Equipment Shelter Fire/Detection System Trouble | 10/D3 | 1 = Fault or Failure |

- - - - -

* This indication applies only when the spectrum filter is present.

** AC units #3 and #4 may not exist.

*** This function is not normally included in the configuration and the signal will be strapped in the “NOT” state (i.e., to “0” if the function equals “1”).

**** Receiver Not Connected to Antenna exists only in the redundant configuration.

Table 5-20. DAU to Processor Data (Discrete) (continued)

| Discrete Signals | Byte/Bit | Function Equals |
|---|---|---|
| +5V Receiver PS Summary Fault | 10/D4 | 1 = Fault or Failure |
| Fire/Smoke in Equipment Shelter | 10/D5 | 1 = Fire/Smoke |
| ±18V Receiver PS Summary Fault | 10/D6 | 1 = Fault or Failure |
| -9V Receiver PS Summary Fault | 10/D7 | 1 = Fault or Failure |
| Fire/Smoke in Generator Shelter | 11/D0 | 0 = Fire/Smoke |
| Generator Shelter Fire Detection Subsystem Trouble*** | 11/D1 | 1 = Fault or Failure |
| Utility Voltage and Frequency Available | 11/D2 | 1 = Available |
| +9V Receiver PS Summary Fault | 11/D3 | 1 = Fault or Failure |
| ±15V A/D Converter PS Summary Fault | 11/D4 | 1 = Fault or Failure |
| +5V A/D Converter PS Summary Fault | 11/D5 | 1 = Fault or Failure |
| Spare | 11/D6 | - |
| -5.2V A/D Converter PS Summary Fault | 11/D7 | 1 = Fault or Failure |
| Security System Unauthorized Entry Alarm | 12/D0 | 0 = Alarm |
| Security System Equipment Trouble | 12/D1 | 0 = Fault or Failure |
| Security System Disabled | 12/D2 | 0 = Disabled |
| +5V Receiver Protector PS Summary Fault | 12/D3 | 1 = Fault or Failure |
| Spare | 12/D4 | - |
| Spare | 12/D5 | - |
| Receiver Not Connected to Antenna**** | 12/D6 | 1 = Not connected |
| Radome Access Hatch Open | 12/D7 | 0 = Open |
| AC Unit #1 Filter Dirty | 13/D0 | 0 = Dirty |
| AC Unit #2 Filter Dirty | 13/D1 | 0 = Dirty |
| Transmitter Filter Dirty | 13/D2 | 0 = Dirty |
| AC Unit #3 Filter Dirty** | 13/D3 | 0 = Dirty |
| AC Unit #4 Filter Dirty** | 13/D4 | 0 = Dirty |
| Spare | 13/D5 | - |
| Spare | 13/D6 | - |
| Spare | 13/D7 | - |

- - - - -

* This indication applies only when the spectrum filter is present.

** AC units #3 and #4 may not exist.

*** This function is not normally included in the configuration and the signal will be strapped in the "NOT" state (i.e., to "0" if the function equals "1").

**** Receiver Not Connected to Antenna exists only in the redundant configuration.

Table 5-21. DAU to Processor Data (Analog)

| Ref # | Analog Signals | Byte/Bit |
|---|---|---|
| 1 | Outside Ambient Temperature | 14/D0-D7 |
| 2 | Equipment Shelter Temperature | 15/D0-D7 |
| 3 | AC Unit #1 Discharge Air Temp. | 16/D0-D7 |
| 4 | Transmitter Leaving Air Temp. | 17/D0-D7 |
| 5 | Radome Area Temperature | 18/D0-D7 |
| 6 | Generator Shelter Temp. | 19/D0-D7 |
| 7 | Storage Tank Fuel Level | 20/D0-D7 |
| 8 | Spare | 21/D0-D7 |
| 9 | Spare | 22/D0-D7 |
| 10 | Spare | 23/D0-D7 |
| 11 | Spare | 24/D0-D7 |
| 12 | Spare | 25/D0-D7 |
| 13 | Spare | 26/D0-D7 |
| 14 | AC Unit #3 Discharge Air Temp.* | 27/D0-D7 |
| 15 | AC Unit #2 Discharge Air Temp. | 28/D0-D7 |
| 16 | Spare | 29/D0-D7 |
| 17 | Spare | 30/D0-D7 |
| 18 | XMTR RF Power (Differential Input) | 31/D0-D7 |
| 19 | Antenna RF Power (Differential Input) | 32/D0-D7 |
| 20 | Spare | 33/D0-D7 |
| 21 | AC Unit #4 Discharge Air Temp.* | 34/D0-D7 |
| 22 | Spare | 35/D0-D7 |
| 23 | Spare | 36/D0-D7 |
| 24 | Pedestal +28V PS | 37/D0-D7 |
| 25 | Encoder +5V PS | 38/D0-D7 |
| 26 | Pedestal +15V PS | 39/D0-D7 |
| 27 | Spare | 40/D0-D7 |
| 28 | Pedestal +5V PS | 41/D0-D7 |
| 29 | Spare | 42/D0-D7 |
| 30 | Spare | 43/D0-D7 |
| 31 | Signal Processor +5V PS | 44/D0-D7 |
| 32 | Spare | 45/D0-D7 |
| 33 | MC +28V PS | 46/D0-D7 |
| 34 | MC +15V PS | 47/D0-D7 |
| 35 | MC +5V PS | 48/D0-D7 |
| 36 | Spare | 49/D0-D7 |
| 37 | Spare | 50/D0-D7 |

- - - - -

* AC Units #3 and #4 may not exist.

Table 5-21. DAU to Processor Data (Analog) (continued)

| Ref # | Analog Signals | Byte/Bit |
|---|---|---|
| 38 | Spare | 51/D0-D7 |
| 39 | Pedestal -15V PS | 52/D0-D7 |
| 40 | Spare | 53/D0-D7 |
| 41 | Spare | 54/D0-D7 |
| 42 | MC -15V PS | 55/D0-D7 |
| 43 | Spare | 56/D0-D7 |
| 44 | DAU Test 0 | 57/D0-D7 |
| 45 | DAU Test 1 | 58/D0-D7 |
| 46 | DAU Test 2 | 59/D0-D7 |
| 47 | Spare | 60/D0-D7 |
| 48 | Spare | 61/D0-D7 |

- - - - -

* AC Units #3 and #4 may not exist.

Table 5-22. Analog Signal Characteristics

| Ref # | Units* | Range | Accuracy + | / | Precision** |
|---|---|---|---|---|---|
| 1 | °C | -50 to +50 | 1.0 | / | 100/204 |
| 2 | °C | 0 to +50 | 0.5 | / | 50/204 |
| 3 | °C | 0 to +50 | 0.5 | / | 50/204 |
| 4 | °C | -10 to +60 | 1.0 | / | 70/204 |
| 5 | °C | -50 to +50 | 1.0 | / | 100/204 |
| 6 | °C | 0 to +50 | 1.0 | / | 50/204 |
| 7 | % | 0 to 100 | 1.0 | / | 100/204 |
| 8 | - | - - | - | | |
| 9 | - | - - | - | | |
| 10 | - | - - | - | | |
| 11 | - | - - | - | | |
| 12 | - | - - | - | | |

- - - - -

* All signals are scaled integer magnitude.

** Fractional values are exact. LSB = Precision.
Example: Ref #1 Precision = 100/204 = 0.49 for LSB

*** For these numbers, the acceptable range for a properly operating DAU is as follows:

| Ref # | Range |
|---|---|
| 44 | 7-11 |
| 45 | 118-136 |
| 46 | 221-252 |

\+ All Accuracy measurements are of the same unit scale as range.

Table 5-22. Analog Signal Characteristics (continued)

| Ref # | Units* | Range | Accuracy + / | Precision** |
|---|---|---|---|---|
| 13 | - | - - | - | |
| 14 | °C | 0 to +50 | 0.5 / | 50/204 |
| 15 | °C | 0 to +50 | 0.5 / | 50/204 |
| 16 | - | - - | - | - |
| 17 | - | - - | - | - |
| 18 | mW | -0.4 to 9.6 (0 to 0.1v) | 0.2 / | 10/255 |
| 19 | mW | -0.4 to 9.6 (0 to 0.1v) | 0.2 / | 10/255 |
| 20 | - | - - | - | - |
| 21 | °C | 0 to +50 | 0.5 / | 50/204 |
| 22 | - | - - | - | - |
| 23 | - | - - | - | - |
| 24 | Volts | 0 to 40.8 | 0.32 / | 28/175 |
| 25 | Volts | 0 to 6.64 | 0.05 / | 5/192 |
| 26 | Volts | 0 to +20 | 0.16 / | 15/191 |
| 27 | - | - - | - | - |
| 28 | Volts | 0 to 6.64 | 0.05 / | 5/192 |
| 29 | - | - - | - | - |
| 30 | - | - - | - | - |
| 31 | Volts | 0 to 6.64 | 0.05 / | 5/192 |
| 32 | - | - - | - | - |
| 33 | Volts | 0 to 37.4 | 0.29 / | 28/191 |
| 34 | Volts | 0 to 20.0 | 0.16 / | 15/191 |
| 35 | Volts | 0 to 6.64 | 0.05 / | 5/192 |
| 36 | - | - - | - | - |
| 37 | - | - - | - | - |
| 38 | - | - - | - | - |

- - - - -

* All signals are scaled integer magnitude.

** Fractional values are exact. LSB = Precision.
Example: Ref #1 Precision = 100/204 = 0.49 for LSB

*** For these numbers, the acceptable range for a properly operating DAU is as follows:

| Ref # | Range |
|---|---|
| 44 | 7-11 |
| 45 | 118-136 |
| 46 | 221-252 |

\+ All Accuracy measurements are of the same unit scale as range.

Table 5-22. Analog Signal Characteristics (continued)

| Ref # | Units* | Range | Accuracy + | / | Precision** |
|---|---|---|---|---|---|
| 39 | Volts | 0 to 20.0 | 0.16 | / | 15/191 |
| 40 | - | - - | - | | - |
| 41 | - | - - | - | | - |
| 42 | Volts | 0 to 19.9 | 0.16 | / | 15/192 |
| 43 | - | - - | - | | |
| 44*** | None | 0 to 255 | 2 | / | 1 |
| 45*** | None | 0 to 255 | 2 | / | 1 |
| 46*** | None | 0 to 255 | 2 | / | 1 |
| 47 | - | - - | - | | |
| 48 | - | - - | - | | - |

- - - - -

* All signals are scaled integer magnitude.

** Fractional values are exact. LSB = Precision.
Example: Ref #1 Precision = 100/204 = 0.49 for LSB

*** For these numbers, the acceptable range for a properly operating DAU is as follows:

| Ref # | Range |
|---|---|
| 44 | 7-1 1 |
| 45 | 118-136 |
| 46 | 221-252 |

\+ All Accuracy measurements are of the same unit scale as range.

5-9.2.3 Discrete Status Data Monitoring. The discrete status data monitoring function gathers alarm and fault data which result from relay and switch closures. (These relays and switches are located throughout the RDA.) The radar transmitter also gathers discrete status and fault data that is contained within its functional area. The transmitter processes the data into a parallel data bus. All of these signals are sent to the DAU/RDASC status data interface function. The parallel data bus discrete signals of bytes 0-5 are offset in the DAU/RDASC interface function and become bytes 8-13 when transmitted to the RDASC processor. Refer to Table 5-20 for a listing of the discrete data.

5-9.2.4 Analog Status Data Monitoring. The analog status data monitoring function gathers analog data (voltages and currents) from temperature sensors, power supplies, antenna and transmitter RF power monitors, and other sources around the RDA. The data is processed to form the A/D data word and is sent to the DAU/RDASC interface function. Refer to Table 5-21 for a listing of the analog data sent to the RDASC processor.

5-9.3 RDASC/DAU COMMAND DATA INTERFACE FUNCTIONAL DESCRIPTION.

**NOTE**

The following paragraphs provide the functional description for both non-redundant and redundant systems.

The purpose of the RDASC/DAU Command Data Interface function is to receive serial command data from the RDASC processor and to distribute it to the appropriate destination. This function is in the DAU digital controller, and part of the analog processor module. See Figure FO5-14, sheets 1 and 2 for the RDASC/DAU command data interface.

In redundant systems, both FAA and NWS redundant systems contain two RDA channels, one of which is in control and one of which is not. The operator selects which channel is to be the controlling channel by using a set of controlling channel commands or a set of non-controlling channel commands. For FAA redundant systems, these commands are entered at the MSCF workstation or RDA maintenance terminal. For NWS redundant systems, these commands are entered at the remote RDA maintenance terminal or at the local RDA maintenance terminal. See Figure FO5-15 sheets 1 through 6 for the Redundant RDASC/DAU Command Data Interface function.

5-9.3.1 Asynchronous Reception and Demultiplexing. The serial data from the RDASC processor is converted into 8-bit parallel data word in the UART receiver (Figure FO5-14, sheet 1, zone 8B, Figure FO5-15, sheet 1, zone 10B). The three LSBs of the word (RD0-RD2) go to the UART receiver controller and byte demultiplexer (demux) and strobe generator circuitry to generate strobes for the demux. The demux accepts the data word and the demux strobes to separate the eight status and mode bits. The bits are distributed as follows:

- Two bits are sent through the relay logic to the auto transfer switch for power source selection control (byte 2, bit 3 and byte 2, bit 4).
- Four bits are passed through the timeout interlock gate and are sent to:
  - A relay driver/relay as ANT CMD to the W/G Switch UD1S1 for waveguide switch activation or deactivation (byte 1, bit 5).
  - A driver as HV ON CMD RET to the transmitter HV control function (byte 1, bit 4).
  - Relay logic as standby/operate commands to the pedestal control unit (byte 2, bit 1).
  - A differential driver for CH2 CMD for RDA redundancy (byte 2, bit Ø). (Figure FO5-15, sheet 1, zone 6B)
- Three bits (byte 1, bits 2-3; and byte 2, bit 5) are sent to the audible alarm logic where logic determines whether to sound an alarm. The alarm control switch on the Maintenance Panel UD5A2 resets the alarm logic or prohibits sounding the alarm (alarm audio OFF).

If a fault condition exists with the UART, an error signal (UART ERR) is output to the DAU/RDASC interface function and transmitted back to the RDASC processor.

5-9.3.2 Time-Out Interlock Logic. When communication between the RDASC and DAU is lost, the timeout interlock gate disables the transmitter, waveguide switch, CH2 CMD (redundant systems), and pedestal servos. To do this, the UART receiver controller sends a STRB0 signal to the time out interlock generator (watchdog timer) (Figure FO5-14, sheet 1, 6A, Figure FO5-15, sheet 1, zone 8A). The STRB0 signal is asserted everytime the computer sends data to the DAU. The STRB0 signal causes the TIMER RST signal to be asserted which resets the time out interlock

generator function. The time out interlock generator circuit counts the clock cycles of the clock (2400 CLK) since the last assertion of the TIMER RST signal. The TIMEOUT signal is generated if the counter is allowed to count to 28,672 (about 9.3 sec). The TIMEOUT DIS signal inhibits the assertion of the TIMEOUT signal. The RDA PROC signal is generated whenever the TIMEOUT signal is activated. The functional block of the 2400 Hz CLK GEN is a divide by 8 circuit. The TIMER RST signal is the logical OR'ed output of the STROB0, $\overline{\text{BMR}}$, and $\overline{\text{CLR RCVR ERR}}$ signals. $\overline{\text{BMR}}$ is the logical negation of MR (master reset). $\overline{\text{RST ERR}}$ is the logical NOR'ed of $\overline{\text{BMR}}$ and $\overline{\text{CLR RCVR ERR}}$. When TIMEOUT is asserted, the time out gate circuit disables GATED BYTE 1 BIT 4, GATED BYTE 1 BIT 5, and GATED BYTE 2 BIT 1, which turn off the drivers, disabling the pedestal servos and transmitter.

5-9.3.3 Relay Driver Logic. The relay driver logic (Figure FO5-14, sheet 2, Figure FO5-15, sheet 2) receives the commands and control signals from the asynchronous reception and demultiplexing function and also the time-out interlock logic circuits and applies them to a peripheral driver. The following outputs from the peripheral driver are listed as follows:

5-9.3.3.1 Relay DR2 Signal. The RELAY DR2 signal, when present, closes relay U29 which causes a switchover to generator power. The SW TO GEN signal is sent to the auto transfer switch in the generator shelter to effect the switchover.

5-9.3.3.2 Relay DR3 Signal. The RELAY DR3 signal, when present, closes relay U30 which causes a switchover to utility power. The SW TO UTIL signal is sent to the auto transfer switch in the generator shelter to effect the switchover.

5-9.3.3.3 Relay DR4 Signal. The RELAY DR4 signal closes relay U31 which provides relay closure to the pedestal for operation via relay K2 (Figure FO5-14, sheet 2, 6B, Figure FO5-15, sheet 1, 3B) which allows interlocking with the radome hatch.

5-9.3.3.4 ANT CMD Relay Signal. The ANT CMD RELAY signal, (Figure FO5-14, sheet 2, 6B; for redundant systems Figure FO5-15, sheet 2, 7B), provides relay closure of K3 which causes actuation of Waveguide Switch UD1S1 (UD1S101 for redundant systems). The waveguide switch can be rotated from the dummy load to the antenna position using the TOGGLE TRANSMITTER WAVEGUIDE SWITCH POSITION command in either the radar source control menu of RDASOT or the RDA application software.

In non-redundant systems, this command is output from the peripheral driver of the DAU UD5A3 as the ANT CMD RELAY signal (Figure FO5-14, sheet 2, 6B). This signal provides a return to energize the coil of relay UD5A3K3 (sheet 3, 3B). Contacts A1 and A2 of relay K3 close to provide +28 Vdc to the coil of Waveguide Switch UD1S1 (sheet 3, 2B), as long as Radome Hatch Switch #1 UD11S2 (sheet 3, 6B) is closed. Contacts of energized waveguide switch UD1S1 close applying +28 Vdc to the transmitter via the ANTENNA POSITION INDICATE signal. This signal informs the transmitter that the waveguide switch is positioned to radiate through the antenna.

In redundant systems, this command is output from the peripheral driver of the DAU UD105A3 as the ANT CMD RELAY signal (Figure FO5-15, sheet 3, 6B). This signal provides a return to energize the coil of Relay UD105A3K3 (sheet 1, 4B). Contacts A1 and A2 of relay K3 close to provide +28 Vdc to the coil of Waveguide Switch UD1S101 (sheet 5, 4A), as long as Radome Hatch Switch #1 UD11S102 (sheet 6, 7B) is closed. Contacts of energized switch UD1S101 close

applying +28 Vdc to the transmitter via the ANTENNA POSITION INDICATE signal. This signal informs the transmitter that the waveguide switch is positioned to radiate through the antenna. The closed contacts of UD1S101 also enables +28 Vdc to energize the coil of relay UD5A3K8 (sheet 4, 8B) via a path through UD105A3TB2-11 and UD105A3TB2-5 (sheet 5, 6A). Normally open contacts of relay K8 close to provide +28 Vdc to the Transmitter UD103 through channel 2's Waveguide Switches UD1S1 and UD1S2 (sheet 4, zones 10A and 11A) via the WAVEGUIDE SWITCH TRANSFER INTERLOCK signal. This signal allows the transmitter to radiate.

When the coil of Waveguide Switch UD1S101 is not energized, +28 Vdc is sent through the switch's normally closed contacts (sheet 5, 9A) and through normally closed contacts 6-8 of relay K8 (sheet 4, 7B) to the transmitter via the WAVEGUIDE SWITCH TRANSFER INTERLOCK signal. This enables the transmitter to continue to radiate. Only when the coil of Waveguide Switch UD1S101 is in motion is the transmitter disabled from transmitting.

For Channel 2, the ANT CMD RELAY signal output from UD5K3 energizes relay UD5A3K3 (sheet 1, 4B). Its contacts A1 and A2 close, providing +28 Vdc to energize Waveguide Switches UD1S1 and UD1S2 through the RADOME HATCH SWITCH #1 RTN signal. Switches UD1S1 and UD1S2 energize and their contacts close (sheet 4, 11A and 10A) providing +28 Vdc to the transmitter via the ANTENNA POSITION INDICATE signal. This signal informs the transmitter that the waveguide switches are positioned to radiate through the antenna. Whether switch UD1S1 is energized or deenergized, its normally open or normally closed contacts provide +28 Vdc to the Transmitter UD3, via the WAVEGUIDE SWITCH TRANSFER INTERLOCK signal. The +28 Vdc is supplied either through the RADOME HATCH SWITCH #1 RTN signal when the switch UD1S1 is energized, or through normally closed contacts when the switch is deenergized. The presence of the WAVEGUIDE SWITCH TRANSFER INTERLOCK signal allows the transmitter to operate. Only when the waveguide switch is in motion is this signal not present.

5-9.3.3.5 Status/Alarm Signal. Status/Alarm signals are on the Maintenance Panel UD5A2 to indicate status of the power source and fault conditions.

5-9.3.4 Audible Alarm Logic. The audible alarm logic (Figure FO5-14, sheet 2, Figure FO5-15, sheet 2) receives the AUDIBLE ALARM and TRIGGER signals from the asynchronous reception and demultiplexing function and produces the AUDIBLE ENABLE signal to cause the audible alarm on the maintenance panel to sound. The maintenance panel switch input to the alarm logic circuits (Figure FO5-14, sheet 2, 8A, Figure FO5-15, sheet 2, 8A) determines whether the alarm will sound or be disabled depending on the switch position. This switch is also used to reset the audible alarm after it sounds.

5-9.3.5 Transmitter Control. The transmitter control logic function (Figure FO5-14, sheet 3, Figure FO5-15, sheets 4 through 6) shows the interlock interfacing for the waveguide switch, radome hatch switch and fault condition paths for circulator overtemp conditions in the transmitter and waveguide pressurization unit. A +28 Vdc input is provided through the radome hatch switch to relay K3 and, when energized by the ANTENNA CMD, causes the waveguide switch to be positioned into the antenna position. Waveguide switch positions (Figure FO5-14, sheet 3, 6B, Figure FO5-15, sheets 4 and 5, 11A and 9AB) show interlock positions when the waveguide switch is in transition from antenna to dummy load and vice-versa. A +28 Vdc input is also provided to the transmitter for an indication that the switch is in antenna position. The +28 Vdc inputs to the timing control function provides the following:

5-9.3.5.1 WG SW Transition Interlock. When +28 Vdc is present, indicates the waveguide switch is in the HOME position in either operating position, enabling transmitter operation. Absence of +28 Vdc indicates the waveguide switch is in transition between dummy load and antenna or vice versa which inhibits the transmitter.

5-9.3.5.2 WG SW Antenna Position Indicator. Presence of +28 Vdc indicates the waveguide switch is in the antenna position. Absence of +28 Vdc indicates the waveguide switch is in the dummy load position.

5-9.3.5.3 Circulator Overtemp Interlock. Presence of +28 Vdc enables transmitter operation. Absence of +28 Vdc shuts off transmitter high voltage.

5-9.3.5.4 WG Pressure/Humidity Alarm. Presence of +28 Vdc indicates the pressure and dew point of the waveguide air are satisfactory. Absence of +28 Vdc permits transmitter operation, but a fault condition exists.

5-9.3.5.5 Spectrum Filter Pressure Fault. Presence of +28 Vdc enables transmitter operation. Absence of +28 Vdc shuts off transmitter high voltage.

5-9.3.6 Pedestal Control. The STANDBY/$\overline{\text{OPERATE}}$ signal input to the pedestal control unit (Figure FO5-29, sheet 2, 7B) determines whether the pedestal operates or is in standby. Two conditions must be met to enable the pedestal in a redundant system to operate: the hatch must be closed, and the pedestal operate command must be issued by the controlling channel. When these two conditions are met, a return is applied to the STANDBY/$\overline{\text{OPERATE}}$ signal, which commands the pedestal to operate. Each channel contains a radome hatch switch that places the pedestal in standby when the hatch is opened and enables the pedestal to operate when the hatch is closed. For Channel 2, Radome Hatch Switch #1, UD11S2 (Figure FO5-15, sheet 6, 6B) closes when the hatch closes to provide a path for +28 Vdc to the coil of Relay UD5A3K2 (Figure FO5-29, sheet 3, 2B). Contacts of relay K2 close, closing part of the connection between STANDBY/$\overline{\text{OPERATE}}$ RTN and STANDBY/$\overline{\text{OPERATE}}$. When a pedestal operate command is given by Channel 2, the RDASC generates a return on the RELAY DR4 signal (Figure FO5-14, sheet 2, 7B, Figure FO5-15, sheet 2, 7B) to enable +28 Vdc to energize the coil of Relay UD5A3A2U31. Contacts of relay U31 close (Figure FO5-29, sheet 3, 2B), closing the second part of the connection between STANDBY/$\overline{\text{OPERATE}}$ RTN and STANDBY/$\overline{\text{OPERATE}}$.

To complete the path between STANDBY/$\overline{\text{OPERATE}}$ RTN and STANDBY/$\overline{\text{OPERATE}}$, Channel 2 must be in control. Channel 2 commands control using the controlling channel command. This command, PCH2 CMD, provides a return path through DAU Analog Processor Board UD5A3A2 (Figure FO5-14, sheet 1, 3B, Figure FO5-15, sheet 1, 5B) for +28 Vdc to energize the coil of relay K4 (Figure FO5-29, sheet 3, 2B). Contacts 2-5 of relay K4 close to complete the connection between STANDBY/$\overline{\text{OPERATE}}$ RTN and STANDBY/$\overline{\text{OPERATE}}$ and cause the pedestal to operate. In addition, contacts 1-6 of relay K4 close to connect RDASC1/$\overline{\text{RDASC2}}$ RTN to RDASC1/$\overline{\text{RDASC2}}$. This makes RDASC1/$\overline{\text{RDASC2}}$ not asserted, which tells the pedestal control unit to activate Channel 2.

Channel 2 can relinquish control using the non-controlling channel command. The PCH2 CMD signal is deasserted, which removes the return path for +28 Vdc to the coil of relay K4 (Figure FO5-29, sheet 3, 3A). This deenergizes relay K4, which opens contacts 2-5 and closes

contacts 2-4, disconnecting the Channel 2 STANDBY/$\overline{\text{OPERATE}}$ RTN signal from the STANDBY/$\overline{\text{OPERATE}}$ signal. Relay K4 contacts 1-6 open, disconnecting the RDASC1/$\overline{\text{RDASC2}}$ RTN signal from the RDASC1/$\overline{\text{RDASC2}}$ signal.

Channel 1 can command control using the controlling channel command. When the operator uses this command at Channel 1, Channel 1 requests, over the interprocessor link between the RDASC processors of Channel 1 and Channel 2, that Channel 2 relinquish control. Channel 2 relinquishes control by deasserting the PCH2 CMD signal and deenergizing relay UD5A3K4 as described above. Contacts 2-4 of relay UD5A3K4 close (Figure FO5-29, sheet 3, 3B) to link the STANDBY/$\overline{\text{OPERATE}}$ signal to a return path that flows through the Channel 1 RDA Data Processor, UD105. The STANDBY/$\overline{\text{OPERATE}}$ RTN signal is applied to the STANDBY/$\overline{\text{OPERATE}}$ signal when contacts of Channel 1 relays UD105A3A2U31 (Figure FO5-14, sheet 2, 7B, Figure FO5-15, sheet 3, 7B) and UD105A3K2 close. To close the contacts of U31, Channel 1 issues a pedestal operate command, which generates a return on the RELAY DR4 signal that energizes the coil of UD105A3A2U31 (Figure FO5-14, sheet 2, 7B, Figure FO5-15, sheet 3, 7B). Contacts of UD105A3K2 close when the hatch closes. Closing the hatch causes Radome Hatch Switch #1, UD11S102 (Figure FO5-15, sheet 6, 7B) closes to provide a path for +28 Vdc to the coil of relay UD105A3K2 (Figure FO5-15, sheet 1, 3B). Contacts of relay K2 close, completing the Channel 1 connection between STANDBY/$\overline{\text{OPERATE}}$ RTN and STANDBY/$\overline{\text{OPERATE}}$.

### 5-9.4 REDUNDANT RDASC INTERPROCESSOR LINK.

The interprocessor link provides a means of transmitting data between the two RDASC processors in a redundant configuration. The communications link consists of an RS-232 asynchronous link, operating at 19,200 bits per second. It is implemented using an eight-line communications multiplexer (COM MUX) at both RDAs. The RDA processors are connected directly without the use of modems.

The RS-232 interprocessor link connects 8-Line COMM MUX UD5A12A19 to 8-Line COM MUX UD105A12A19 (Figure FO5-31). This interconnection allows mode state data to be requested and passed between the processors. Data is transmitted across the interface in either direction.

The CD bit signifies that the data terminal is ready (DTR). This bit is activated to let the second channel know when the first channel is ready to send and receive data. The CC bit signifies data set ready (DSR). The second channel activates this circuit when it is ready for use. The CF bit signifies received line signal detector (RLSD). The second channel activates this circuit when it detects a carrier signal from the first channel. The CA bit signifies request to send (RTS). A channel activates this circuit when it is ready to send data. The CB bit signifies clear to send (CTS). A channel activates this circuit when it is ready to accept data. For both Channels 1 and 2, the CA bit is fed back into the same channel's CB bit so that both channels are always ready to send and accept data. The BA bit signifies transmitted data (TD). Data is placed on this line for transmission to the other channel. The BB bit signifies received data (RD). Data transmitted on this line from the other channel is received on this line. The AB bit signifies signal ground. All signal levels on other circuits are measured relative to this point.

Prior to the start of transmission, the BA (transmitted data) line is held at the logic 1 (low) level. When data transmission begins, the start bit causes the line to go to a logic 0 (high). The start bit is

followed by eight data bits (0-7), a parity bit, and a stop bit (1). Figure 5-26 lists the format of each byte of data sent between the two processors.

Data transmitted between the two processors consists of interprocessor commands and interprocessor status data. Interprocessor status data is transmitted only in response to an interprocessor command.

Prior to entering operate, the RDASC sends a status request command to the other channel via the interprocessor link to determine whether the other channel is in operate. If the other channel is in operate, the RDA returns to the state present at the time the command to operate was received and issues the alarm UNABLE TO CMD OPER-REDUN CHAN ONLINE. If the other channel does not respond within two seconds to the status request command, the first channel determines that the other channel is not in the operate state. The first channel continues the transition to the operate sequence. The RPG data processor sends a COMMAND OTHER CHANNEL TO STANDBY command to the RDA over the wideband link. The RDA relays the command to the other channel via the interprocessor link. The other channel's RDA enters the standby state if it is in remote control or in local control with remote control enabled. It returns an acknowledgement message, `REDUNDANT CHANNEL STANDBY COMMAND ACCEPTED`. If the other channel's RDA is in local control and remote control is not enabled, the COMMAND OTHER CHANNEL TO STANDBY command is rejected. The alarm INTERPROCESSOR STANDBY COMMAND REJECTED is set. If the other channel does not acknowledge the COMMAND OTHER CHANNEL TO STANDBY command, the alarm NO INTERPROCESSOR COMMAND RESPONSE is set.

Interprocessor status data is passed from one channel to the other upon request. One channel's RDA requests status from the other channel at least once every scan sequence to monitor the interprocessor link status.

The controlling channel controls the pedestal. The non-controlling channel is unable to communicate with the pedestal, and therefore the non-controlling channel inhibits monitoring of the pedestal status. Pedestal control switching is performed from Channel 2 through the maintenance console interface. When Channel 2 is deenergized, control is from Channel 1.

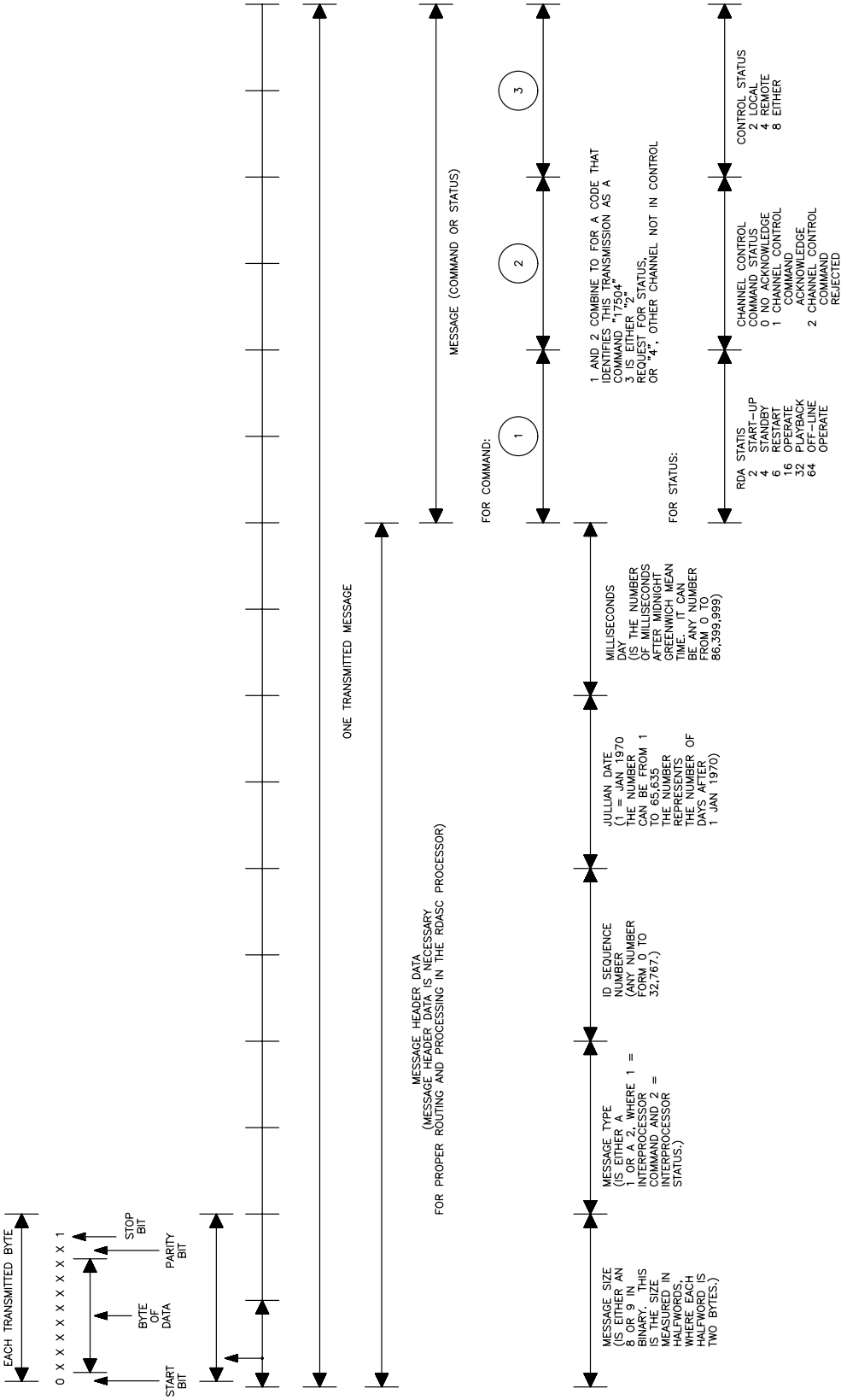


Figure 5-26. RDA Interprocessor Message Format

5-9.5 DAU/RDASC STATUS DATA INTERFACE FUNCTIONAL DESCRIPTION.

The DAU/RDASC status data interface provides a means of transmitting the RDA status data to the RDASC processor. This data is also supplied to the FAA Remote Monitoring Subsystem (RMS). This interface is shown on Figure FO5-16 and consists of the following functions:

- Reception and Selection Circuitry
- Master Timing
- UART Transmitter Control and Strobe Generation
- RS-232 Asynchronous Transmission

5-9.5.1 Reception and Selection Circuitry. The digital input multiplexer (Figure FO5-16, sheet 1, zones 2A, 2B) receives the A/D word from the analog status data monitoring function, the transmitter status data word from the transmitter, and the discrete data from the discrete data monitoring function. The multiplexer organizes this data into channels and multiplexes them onto a single, parallel bus. The parallel bus also contains the discrete transmitter alarm signals of TX RECYCLE, TX INOP, and TX HV OFF along with the discrete COHO failure signal (COHO/CLOCK). The transmitter processes all collected data by multiplexing it together to form an 8-bit bus with eight time-shared channels. In this way, 64 status bits can be monitored (see Table 5-23). The transmitter data select (TDS) signals TDS01, TDS02, and TDS00 (sheet 2, zone 1A) tells the transmitter when to place each channel on the bus. The status word select bus is generated in the DAU/RDASC status data interface by the UART transmitter control and strobe generator. The transmitter (sheet 1, zone 7B) also sends, via the discrete data path, the following three status alarm signals:

5-9.5.1.1 TX RECYCLE. TX RECYCLE indicates that the transmitter has experienced a fault condition and is going through its automatic recycling sequence to restore normal operation. A maximum of 4 recycle sequences with a 2 minute interval can occur prior to generating TX INOP.

5-9.5.1.2 TX INOP. TX INOP indicates that the automatic fault recycling process has failed to restore normal transmitter operation, or that the transmitter is in the manual control reset mode.

5-9.5.1.3 TX HV OFF. TX HV OFF indicates the transmitter high voltage is off. An active high indicates the transmitter high voltage has been operator removed if TX RECYCLE and TX INOP are both active low (otherwise removed due to fault condition).

Refer to Table 5-24 for a description of the transmitter status alarms. The above alarm signals are received by a differential receiver and then sent to a latching circuit. The latch is clocked by a 1.2 MHz clock from the master timing function and outputs the alarm data onto the parallel bus as TD 0-7 data. This data is sent to the RS-232 asynchronous transmission function for transmission to the RDASC processor.

5-9.5.2 Master Timing. The master timing function (Figure FO5-16, sheet 1) provides the timing for the entire DAU. The timing signals originate from an internal oscillator and the DAU timing logic develops the clock signals for use throughout the DAU.

5-9.5.3 UART Transmitter Control and Strobe Generation. The purpose of the UART transmitter control and strobe generation function (Figure FO5-16, sheet 2) is to do the following:

- Provide the control signals for the UART transmitter in the RS-232 asynchronous transmission function.
- Enable signals from the data MUX strobe generator to accomplish the A/D conversion of the analog signals in the analog status data monitoring function.
- Provide select bits (TDS 0-2) to the transmitter for selection of transmitter status data to be sent to the RDASC processor. The $\overline{\text{START CONV}}$ output is sent to the A/D converter when conversion of analog data is required. The control and enabling signal outputs are generated as a result of the clock inputs from the master timing function.

Table 5-23. Transmitter Fault Status

| Signal/Data/Status Name | Select |
|---|---|
| Filament PS On | 000 |
| Klystron Preheat | 000 |
| Transmitter Available | 000 |
| W/G Switch Position | 000 |
| W/G Transfer Interlock | 000 |
| Local Mode/No Control | 000 |
| Maintenance Work Required | 000 |
| PFN SW Position | 000 |
| +5 Vdc PS Fault | 001 |
| +15 Vdc PS Fault | 001 |
| +28 Vdc PS Fault | 001 |
| -15 Vdc PS Fault | 001 |
| +45 Vdc PS Fault | 001 |
| Filament PS Voltage | 001 |
| Vacuum Pump PS Voltage | 001 |
| Focus Coil PS Voltage | 001 |
| Circulator Overtemp | 010 |
| Spectrum Filter Low Pressure | 010 |
| W/G Arc/VSWR | 010 |
| Cabinet Interlock | 010 |
| Cabinet Air Temperature | 010 |
| Cabinet Airflow | 010 |
| Spare | 010 |
| Spare | 010 |

Table 5-23. Transmitter Fault Status (continued)

| Signal/Data/Status Name | Select |
|---|---|
| Modulator Overload | 011 |
| Modulator Inverse Current | 011 |
| Modulator Switch Failure | 011 |
| Main Power Overvoltage | 011 |
| Flyback Charger Failure | 011 |
| Inverse Diode Current/Undervoltage | 011 |
| Trigger Amplifier Failure | 011 |
| Spare | 011 |
| Transmitter Overvoltage | 100 |
| Transmitter Overcurrent | 100 |
| Focus Coil Current | 100 |
| Focus Coil Airflow | 100 |
| Oil Temperature | 100 |
| PRF Limit Fault | 100 |
| Oil Level | 100 |
| Battery Charging Indicator | 100 |
| Klystron Overcurrent | 101 |
| Klystron Filament Current | 101 |
| Klystron Vacuum Current | 101 |
| Klystron Air Temperature | 101 |
| Klystron Airflow | 101 |
| Test ′One′ Bit 5 | 101 |
| Test ′One′ Bit 6 | 101 |
| Test ′One′ Bit 7 | 101 |
| Test ′One′ Bit Ø | 110 |
| Test ′One′ Bit 1 | 110 |
| Test ′One′ Bit 2 | 110 |
| Test ′One′ Bit 3 | 110 |
| Test ′One′ Bit 4 | 110 |
| Modulator Switch Maintenance | 110 |
| Post Charge Regulator Maintenance | 110 |

Table 5-23. Transmitter Fault Status (continued)

| Signal/Data/Status Name | Select |
|---|---|
| W/G Pressure/Humidity | 110 |
| Test ′Zero′ Bit Ø | 111 |
| Test ′Zero′ Bit 1 | 111 |
| Test ′Zero′ Bit 2 | 111 |
| Test ′Zero′ Bit 3 | 111 |
| Test ′Zero′ Bit 4 | 111 |
| Test ′Zero′ Bit 5 | 111 |
| Test ′Zero′ Bit 6 | 111 |
| Test ′Zero′ Bit 7 | 111 |

5-9.5.4 RS-232 Asynchronous Transmission. The UART transmitter circuit (Figure FO5-16, sheet 2) receives the multiplexed data processed by the reception and selection circuitry and transmits the data to the RDASC processor via driver circuitry. The transmission of data is controlled by the BAUD CLK and $\overline{\text{TDL}}$ control signals. Each data byte transmitted from the DAU contains eight bits of data. The data is listed in Table 5-20 and Table 5-21. The DAU responds to a status data request from the processor by sampling transmitter, tower utilities (T/U), and other data and transmitting the data to the processor. The multiplexed transmitter data is transmitted first, then discrete transmitter data, COHO/CLOCK, UART ERR, discrete T/U data, analog T/U data, two analog RF power signals, and finally, power supply voltages.

5-9.6 DISCRETE STATUS DATA MONITORING FUNCTIONAL DESCRIPTION.

The discrete status data monitoring function gathers all the discrete bit data from status and fault contacts in the RDA and sends that data to the DAU digital controller card. Figure FO5-17 (Onan), Figure FO5-18 (Kohler), Figure FO5-19 (redundant with Kohler), sheets 1 and 2 list the discrete signals that originate in the generator shelter, equipment shelter, transition power maintenance shelter, transition power source, and the tower assembly. This data is placed on a bus and received by the DAU/RDASC status data interface function (Figure FO5-16). The DAU/RDASC status data interface function places the data onto the multiplexed bus and sends the data to the RDASC processor. This data is also supplied to the FAA Remote Monitoring Subsystem (RMS). When placed on the bus, the discrete data is placed on the bus at bytes 8 through 13, and the transmitter status data (see Table 5-23) is placed on the bus at bytes 0 through 5 as shown on Figure FO5-17, Figure FO5-18, and Figure FO5-19. GENERATOR POWER AVAILABLE, UTILITY POWER AVAILABLE, and TRANSFER SWITCH UTILITY discrete signals are sent to the maintenance panel via the relay drive logic circuits in the RDASC/DAU command data interface function (Figure FO5-14, sheet 2 and Figure FO5-15, sheets 2 and 3) to indicate availability and power source. Table 5-25 lists the monitoring points of the tower utilities.

## 5-9.7 ANALOG STATUS DATA MONITORING FUNCTIONAL DESCRIPTION.

The analog status data monitoring function (Figure FO5-20 and Figure FO5-21 (redundant)) receives analog currents and voltages from throughout the RDA. Each voltage or current is proportional to the magnitude of the parameter being sampled. In the equipment shelter (Figure FO5-20, sheet 1 and Figure FO5-21, sheet 1 for redundant systems), the temperature at five different locations are sampled. In the generator shelter, a current sample of the generator fuel level and generator shelter temperature is taken. In the RDA Data Processor Cabinet UD5, samples from the DC power supplies are taken. DC voltages representing the transmitted RF power are obtained from two bolometers. One is mounted in the Receiver Cabinet UD4 shown on sheet 2 of each foldout, and the other is located at the antenna pedestal. Finally, the temperature in the radome is measured. Redundant systems have identical and separate sets of sensors as mentioned above, one set for Channel 1 and one set for Channel 2.

5-9.7.1 Analog Signal Reception and Scaling Function. All voltage/current samples are sent to the analog signal reception and scaling function on the DAU Analog Processor Card UD5A3A2. Each voltage/current sample is scaled and sent to the analog multiplexer in the selection and A/D conversion function on Figure FO5-20, sheet 3 and Figure FO5-21, sheets 3 and 4. Using timing and strobes from the DAU digital controller, the analog MUX combines all analog samples into a single line on a line share basis. The voltage/current for each channel occupies a fixed time slot. The voltage in each channel could change during a time slot so a sample and hold circuit is used to sequentially sample the middle of each time slot in the frame. The sample and hold circuit will output a train of pulses, each pulse having an amplitude proportional to the voltage at the instant in time that the channel was sampled. This amplitude-modulated pulse train is sent to an A/D converter. The A/D converter is timed to take each pulse and convert the pulse amplitude into an 8-bit binary number. The number is sent to the DAU Digital Controller UD5A3A1 of the DAU/RDASC interface as an 8-bit parallel bus called the A/D DATA word. When conversion is complete, the $\overline{\text{CONV COMP}}$ signal is output from the A/D converter to the DAU/RDASC interface UART transmitter control and strobe generation function, Figure FO5-16, sheet 1, zone 5B.

Table 5-24. Transmitter Status Alarm Description

| HV OFF | TX RECYCLE | TX INOP | Status/Description |
|---|---|---|---|
| 0* | 0 | 0 | Transmitter HV is on, no fault condition. |
| 1* | 0 | 0 | HV is OFF, no fault condition. |
| 1 | 1 | | HV is OFF, fault condition No. 1 is present. (See Note 1) |
| 1 | 1 | 1 | HV is OFF, fault condition No. 2 present. (See Note 2) |
| 1 | 0 | 1 | HV is OFF, XMTR in local control. |
| 0 | 0 | 1 | HV is on, XMTR in local control. |
| 0 | 1 | 0 | HV is on, maintenance work is required. (See Note 3) |
| 0 | 1 | 1 | Invalid alarm state. |

GENERAL NOTES:

1. Fault Condition No. 1: Transmitter has experienced a fault and is automatically attempting to restore normal operation. RDA control reads transmitter status (Select 000 through 110) and fault data for fault isolation (refer to Table 5-23). TX RECYCLE alarm clears if protective circuitry can be reset. Up to four recycle attempts will be made within a two minute interval. A recycle alarm will also occur if a preventative maintenance condition is detected within the transmitter.

2. Fault Condition No. 2: Transmitter has experienced a fault and automatic recycling circuitry has failed to restore normal operation. (More than four faults have occurred within 2 minutes). RDA control reads transmitter status and fault data ports for fault isolation procedure. Transmitter is inoperable, and manual reset/repair is required to restore operation.

3. The RDA control will be alerted to maintenance conditions in the transmitter via the transmitter recycle alarm (TX RECYCLE). Since maintenance conditions do not degrade transmitter performance, the alarm will be removed after a five second timeout to prevent interference with normal fault processing. High voltage will remain on if a maintenance condition is detected. RDA control may discriminate a maintenance condition versus a fault condition by the state of bit 6 of the status port (Select 000). Upon determination of a maintenance condition within the transmitter, the RDA control will read the maintenance data port (Select 110) to determine what maintenance work is required.

- - - - -

*0 = TTL active low

1 = TTL active high.

5-9.7.2 Temperature Sensors. All temperature sensors are 4-20 mA devices. The fuel level transmitter is a 4-20 mA device, and the voltage sensors are 0.4-2 mA devices. The samples of the pedestal power supply voltages are supplied to the DAU through 1 kΩ series isolation resistors for supplies that are 15 volts or lower and 2 kΩ resistors for higher voltages. The sample of the receiver/signal processor power supply voltage is supplied to the DAU via a 1 kΩ series isolation resistor. The temperature range, accuracy, and sample rates of the temperature sensors are shown on Table 5-26. Refer to Table 5-21 for a complete listing of the analog signals transmitted to the RDASC processor from the DAU.

5-9.8 ON-LINE PERFORMANCE MONITORING.

If I/O errors occur while communicating with the DAU or the RDA maintenance terminal, the appropriate alarms (MMI I/O STATUS ERROR, DAU I/O STATUS ERROR) are set. The I/O error status, date, and time are included in the RDA performance data. If the DAU I/O error occurs three times in five minutes, the MULT DAU I/O ERROR - RDA FORCED TO STBY is set. When performing periodic reads of DAU to RDASC, the DAU STATUS READ TIMED OUT alarm is set if the DAU does not return this data within one read cycle after the read command is issued. If the RDASC program indicates a timeout when sending a command to the DAU, the SEN DAU COMMAND TIMED OUT alarm is set and the command is re-tried. If three consecutive commands timeout, the MULT DAU CMD TOUTS - RESTART INITIATED alarm is set. When the DAU and maintenance terminal interfaces are initialized, the DAU initialization status and maintenance console initialization status contained in the RDA performance data is set to OK or FAIL depending on whether or not the initialization was successful. When an initialization error is detected during the initialization process, the appropriate alarm (DAU INITIALIZATION or MMI INITIALIZATION) is set. If either MMI INITIALIZATION or MMI I/O STATUS ERROR alarms are set, attempts to re-establish maintenance console interface are periodically tried at a time interval not exceeding two seconds until the interface is successfully initialized. If any of the following alarms are set, similar attempts are made to establish the DAU interface:

- DAU STATUS READ TIMED OUT
- DAU INITIALIZATION ERROR
- DAU I/O STATUS ERROR
- MULT DAU I/O STATUS ERROR-RDA FORCED TO STBY

If any maintenance console or DAU initialization functions fail to complete within a reasonable time interval (not to exceed 45 seconds) the INIT SEQ TIMEOUT - RESTART INITIATED alarm is set. If a parity or framing error is detected in the data receiving circuits of the DAU, a DAU UART FAIL alarm is set. Whenever data is read from a disk file or written to a disk file, a disk file read/write status is updated based on the status reported by the operating system and included in the RDA performance data. Disk files are maintained for the RDA state file, bypass map, RDASC calibration data, adaptation data (current), censor zone, and remote VCP. If an I/O fault occurs during a read or write to a disk file, the disk I/O error status is included in the RDA performance data along with the date and time of the latest occurrence. Appropriate alarms are set when errors occur while reading or writing to/from disk files. It should be noted that in certain cases, alarms which are set may not

be reported if the software tasks required to report such alarms are not properly executing due to the condition that caused the alarm to be set.

Alarms in this category are:

- MOD ADAPT DATA FILE READ FAILED
- BYPASS MAP FILE READ FAILED
- RDASOT CAL DATA FILE READ FAILED
- CENSOR ZONE FILE READ FAILED
- REMOTE VCP FILE WRITE FAILED
- CENSOR ZONE FILE WRITE FAILED
- RDASOT CAL DATA FILE WRITE FAILED

Table 5-25. Tower Utilities Discrete Monitoring Points

| Signal | Signal Contacts* | Range | Sampling Rate |
|---|---|---|---|
| Generator Shelter | | | |
| 1. Automatic Transfer Switch in Utility Power Position | NO | Go-No-Go | 1 Hz |
| 2. Diesel Battery Voltage Low | NO | Go-No-Go | 1 Hz |
| 3. Generator Malfunction | NO | Go-No-Go | 1 Hz |
| 4. Generator Maintenance Required | NO | Go-No-Go | 1 Hz |
| 5. Backup Generator Selector Switch Not in Auto | NO | Go-No-Go | 1 Hz |
| 6. Generator Power Available | NC | Go-No-Go | 1 Hz |
| 7. Utility Power Available | NC | Go-No-Go | 1 Hz |
| Equipment Shelter | | | |
| 1. AC Unit #1 Compressor Shutoff | NC | Go-No-Go | 1 Hz |
| 2. AC Unit #1 Filter Dirty | NO | Go-No-Go | 1 Hz |
| 3. Transmitter Filter Dirty | NO | Go-No-Go | 1 Hz |
| 4. AC Unit #2 Compressor Shutoff | NC | Go-No-Go | 1 Hz |
| 5. AC Unit #2 Filter Dirty | NO | Go-No-Go | 1 Hz |

- - - - -

*NO: Normally open contact, will close to indicate function.
NC: Normally closed contact, will open to indicate function.
** The function is normally not included in the shelter configuration and is strapped shorted (closed).

Table 5-25. Tower Utilities Discrete Monitoring Points (continued)

| Signal | Signal Contacts* | Range | Sampling Rate |
|---|---|---|---|
| Tower Assembly | | | |
| 1. Aircraft Hazard Lighting Failure | NO | Go-No-Go | 1 Hz |
| Transition Power Source | | | |
| 1. TPS Inverter On | NO | Go-No-Go | 1 Hz |
| Fire Protection | | | |
| 1. Equipment Shelter Fire Detection System Trouble | NC | Go-No-Go | 1 Hz |
| 2. Fire/Smoke in Equipment Shelter | NC | Go-No-Go | 1 Hz |
| 3. Fire/Smoke in Generator Shelter | NO | Go-No-Go | 1 Hz |
| 4. Generator Shelter Fire Detection System Trouble** | NC | Go-No-Go | 1 Hz |
| Security/Door Monitoring | | | |
| 1. Security System Unauthorized Entry Alarm | NO | Go-No-Go | 1 Hz |
| 2. Security System Equipment Trouble | NO | Go-No-Go | 1 Hz |
| 3. Security System Disabled | NO | Go-No-Go | 1 Hz |
| 4. Generator Door Open | NC | Go-No-Go | 1 Hz |
| 5. TPMS Doors Open | NC | Go-No-Go | 1 Hz |
| 6. Equipment Shelter Door Open | NO | Go-No-Go | 1 Hz |
| 7. Radome Access Hatch Open | NC | Go-No-Go | 1 Hz |

- - - - -

*NO: Normally open contact, will close to indicate function.
NC: Normally closed contact, will open to indicate function.
** The function is normally not included in the shelter configuration and is strapped shorted (closed).

Table 5-26. Tower Utilities Temperature

| Sensor | Range | Sample Accuracy | Rate |
|---|---|---|---|
| 1. Outside Ambient Temperature | -50 to +50°C | 1.0°C | 1 Hz |
| 2. Equipment Shelter Temperature | 0 to +50°C | 0.5°C | 1 Hz |
| 3. AC Unit #1 Discharge Air Temperature | 0 to +50°C | 0.5°C | 1 Hz |
| 4. Transmitter Leaving Air Temperature | -10 to +60°C | 1.0°C | 1 Hz |
| 5. AC Unit #2 Discharge Air Temperature | 0 to +50°C | 0.5°C | 1 Hz |
| 6. AC Unit #3 Discharge Air Temperature* | 0 to +50°C | 0.5°C | 1 Hz |
| 7. AC Unit #4 Discharge Air Temperature* | 0 to +50°C | 0.5°C | 1 Hz |
| 8. Generator Shelter Temperature | 0 to +50°C | 1.0°C | 1 Hz |
| 9. Radome Area Temperature | -50 to +50°C | 1.0°C | 1 Hz |

- - - - -

* These signals may be present only in a redundant system.

5-9.9 OFF-LINE DIAGNOSTICS.

The DAU is tested as part of RDASOT, the RDA off-line diagnostic program. The DAU diagnostic tests are described in NWS EHB 6-510-2, the RDASOT User's Guide.

# Section 5-10. Microwave Distribution

## 5-10.1 INTRODUCTION.

This section discusses the WSR-88D microwave distribution at the functional block diagram level. Figure FO5-22 and Figure FO5-23 (redundant systems) Microwave Distribution Flow Diagrams are used for discussion in this section. The waveguide components included in this paragraph are contained in the electrical equipment shelter and in the radome at the antenna/pedestal assembly and are described as part of the functions listed below:

- Electrical Equipment Shelter Waveguide Components
- Antenna/Pedestal Assembly Waveguide Components

These functions are discussed in paragraphs 5-10.2 and 5-10.3. On-line performance monitoring of the waveguide components is discussed in paragraph 5-10.4.

**NOTE**

This section refers to the RDA Data Processor as UD5, the Receiver as UD4, the Transmitter as UD3, and the Waveguide Pressurization Unit as UD6. Unless otherwise specified, the information also applies to redundant systems UD105, UD104, UD103, and UD106.

## 5-10.2 ELECTRICAL EQUIPMENT SHELTER WAVEGUIDE COMPONENTS.

The high power (HP) RF generated in the transmitter is sent through Directional Coupler UD3DC1 to Harmonic Filter UD1WG2 outside the transmitter cabinet. The harmonic filter is a low pass filter which attenuates harmonics due to the non-linear operation of the klystron. Second, third, and fourth order of harmonics are attenuated. The directional coupler inside the transmitter cabinet also outputs the RF and sends it to attenuator circuits of 30 dB and 3 dB respectively for detection of reflected power by a crystal detector. Any detected power is sent through a coax adapter back to the arc detector.

5-10.2.1 The output RF from the harmonic filter is sent to the Circulator UD1WG4. The circulator provides isolation and protection for the klystron. Reflected power is absorbed in the Medium Power Termination UD1AT2. RF energy through the circulator is output to a Spectrum Filter UD1WG6 if so configured. The spectrum filter provides interference protection from neighboring equipments with the same frequency of operation. The spectrum filter is basically a bandpass filter that passes through the RF. The output from the spectrum filter is sent to the Crossguide Coupler UD1DC1.

5-10.2.2 The crossguide coupler sends the RF energy to the Waveguide Switch UD1S1. In redundant systems, the RF energy is sent to the controlling channels Waveguide Switch UD1S1 or UD1S101. This switch then sends the RF signal through waveguide switch UD1S2. It also provides two other outputs. One output is attenuated by 30 dB and 10 dB attenuators for a crystal detector

that provides detected reflected power back to the arc detector. Another output is the HP RF pulse sample, which is sent to the RF test signal selection and control function in the receiver to be used as the delayed klystron drive (KD) test signal input to the 4-Position Diode Switch, UD4A22.

5-10.2.3 The waveguide switch (UD1S1 for non-redundant systems and UD1S2 for redundant systems) provides for the transfer of the RF energy to the antenna or to the high power termination. The waveguide switch will transfer the high power to the antenna when the antenna command is present.

## 5-10.3 ANTENNA/PEDESTAL ASSEMBLY WAVEGUIDE COMPONENTS.

The high power RF from the waveguide switch (UD1S1 for non-redundant systems and UD1S2 for redundant systems) in the electrical equipment shelter is sent through the waveguide run to the antenna/pedestal assembly. (See Figure FO5-22, sheet 2 and Figure FO5-23, sheet 2 for redundant systems). The RF then passes through the T/R Circulator UD2A1WG05 to the azimuth and elevation rotary joints respectively. The rotary joints accept the RF and send it to the antenna feed for transmission through a crossguide coupler (bi-directional). The RF picked off by the crossguide coupler is sent to the Power Monitor UD2A5. In redundant systems, the RF is sent simultaneously via a 6 dB splitter to a power monitor in Channel 1, UD2A9 and Channel 2, UD2A5.

The power monitor provides continuous RF power monitoring at the antenna. The thermistor mount in the power monitor is a thermocouple element that absorbs the RF power and converts it to a low DC voltage. The low DC voltage is applied to a controlled gain amplifier. The DC output of the thermocouple element is proportional to the power dissipated within it. The controlled gain amplifier provides amplification for the DC input and outputs the amplified signal to the DAU in the RDADP. In redundant systems, both power monitors provide an output signal to their respective DAU. The other input to the amplifier originates at the antenna power head adjustment circuit on the Maintenance Panel UD5A2 or UD105A2*.

## 5-10.4 ON-LINE PERFORMANCE MONITORING.

There are several alarms originating within the microwave distribution and they are described below:

5-10.4.1 Waveguide Switch Failure. Waveguide Switch UD1S1 (or UD1S101 for redundant systems) has a microswitch position detector which reports the position of UD1S1 back to the RDASC application software. If this position does not agree with the commanded (by application software) position, this alarm is set. This alarm forces RDA INOP.

5-10.4.2 WG/PFN Transfer Interlock. This alarm is set while UD1S1 (or UD1S101 for redundant systems) and/or the PFN switch within the transmitter are transitioning between states. This alarm forces RDA INOP.

5-10.4.3 Waveguide ARC/VSWR. When the reflected power exceeds an allowable limit, indicating a deteriorated VSWR, this alarm is set. To detect RF arcs, a visual light sensor is

- - - - -

* Used in redundant systems.

mounted near the flange of the klystron tube within the waveguide. This sensor may also set the alarm.

5-10.4.4 Circulator Overtemp. A temperature sensor is mounted on the Medium Power Termination UD1AT2. If the temperature exceeds the threshold, the alarm is set. The WAVEGUIDE ARC/VSWR should also be set. If this alarm gets set, the CIRCULATOR OVERTEMP forces the Maintenance Mandatory Mode.

5-10.4.5 Spectrum Filter Pressure. The waveguide pressurization unit pressurizes the spectrum filter to 25 psi nominal for the purpose of ensuring that moist atmospheric air which could cause arcing is excluded by a positive pressure from the interior of the spectrum filter. The alarm is set when the pressure drops below the threshold and the Maintenance Mandatory Mode is forced.

5-10.4.6 Waveguide Humidity/Pressure Fault. The pressurization unit also puts out dried air with a pressure of 3 psi nominal for use in other waveguide applications besides the spectrum filter. This alarm is set whenever the pressure or humidity are out of tolerance. The Maintenance Mandatory Mode is forced.

# Section 5-11. Antenna Positioning Electronics

## 5-11.1 INTRODUCTION.

This section discusses the WSR-88D antenna positioning at the functional block diagram level. Throughout this section, see Figure FO5-24 through Figure FO5-29. The antenna positioning functions discussed in this section are:

- Antenna Positioning Overview
- Antenna Positioning Electronics Functional Description, Figure FO5-24
- Servo Microprocessor Control Function, Figure FO5-25
- Antenna Position Data Interface Function, Figure FO5-28
- Servo Fault Monitoring Function, Figure FO5-29
- Servo Loop Electronics, Figure FO5-27
- RDA Servo Interface, Figure FO5-26

These functions are discussed in paragraphs 5-11.2 through 5-11.8, respectively. Paragraph 5-11.2 provides an overview of the antenna positioning functions. On-line performance monitoring and off-line diagnostics are discussed in paragraphs 5-11.9 and 5-11.10.

**NOTE**

This section refers to the RDADP as UD5, the Receiver as UD4, the Transmitter as UD3, and the Waveguide Pressurization Unit as UD6. Unless otherwise specified, the information also applies to redundant systems UD105, UD104, UD103, and UD106.

## 5-11.2 ANTENNA POSITIONING OVERVIEW.

The antenna positioning electronics are functionally part of the Pedestal Assembly UD2A1, but physically contained in the RDA Data Processor; specifically, the Pedestal Control Unit UD5A6. The pedestal assembly consists of two sections: azimuth and elevation. These two sections, or housings, provide the mounting and positioning mechanism for the antenna. The pedestal control unit consists of the Digital Card UD5A6A2 for processing digital signals and the Analog Card UD5A6A1 for processing analog signals and the Notch Filter UD5A6A3, which is fastened to the Analog Card UD5A6A1, is used to suppress oscillations in azimuth slow-to-medium speed ranges. The pedestal control unit provides the means to control and monitor the pedestal assembly via the RDASC processor. The servo loop electronics utilize three feedback networks to continuously adjust the servo motors. These loops are: position, rate, and acceleration (Figure 5-27). The position loop is closed through the computer. This loop receives position data from the encoders in the antenna; the information is then sent to the RDASC processor for analysis and adjustment. Additional information on pedestal assembly operation appears below.

5-11.2.1 RDASC Processor The RDASC processor receives position information from the pedestal assembly and transmits control commands (normally rates) to the pedestal assembly, causing the antenna to move in the desired pattern. A slip ring assembly is provided for the routing of electrical signals to and from the pedestal assembly and ground-based equipment during azimuth rotation.

5-11.2.2 Azimuth and Elevation Housing. The azimuth and elevation housings each contain an electrical drive assembly (with manual drive assembly for backup) for positioning the antenna, and a data package assembly (encoders) that provides antenna orientation information. The encoders provide indications of antenna orientation referenced to a fixed position. For azimuth, the reference is true north; for elevation, the reference is horizontal (perpendicular to plumb).

5-11.2.3 Azimuth Servo Motor. The azimuth servo motor rotates the antenna about the azimuth axis in either a clockwise or counterclockwise direction. The elevation servo motor positions the antenna about the elevation axis in an upward or downward direction.

5-11.2.4 Tachometers. Tachometers are used to monitor the speed of rotation of the azimuth and elevation motors. These devices are mounted concentrically with each drive motor on the same axis. The output of each tachometer is routed to the velocity and acceleration loop controls in the servo loop electronics for pedestal stabilization. Manual drives are supplied for both azimuth and elevation positioning.

5-11.2.5 Antenna Limits and Protections. The antenna can rotate continuously in azimuth through 360 degrees. The degree of travel in elevation is controlled by four electrical limit switches (two prelimit and two final limit) that remove power to the drive motor when the limit is exceeded. The two prelimit switches are set at -1.1 degree and +60.2 degrees. If either of the prelimit switches are opened, the servo motor will reverse to return the antenna within the prescribed limits. The final limit switches are set beyond the prelimit switches at -2 degrees and +64 degrees. Should either of the final limit switches be opened, it would inhibit the elevation amplifier and prevent power from being applied to the drive motor. The radar pedestal is also equipped with mechanical shock-absorbing stops in elevation to prevent damage in the event of failure of the electrical limit switches. The mechanical stops are positioned at -4 degrees and +65 degrees. There is a tolerance of ±1 degree in the lower limit and ±2 degrees in the upper limit for all the above mentioned limits.

5-11.2.6 Status and Safety Elements. The servo status and command interface receives various status signals from the pedestal assembly and sends them to the RDASC processor for evaluation. These signals include three oil level sensors, two of which monitor the oil levels in the azimuth and elevation speed reducers, and a third which monitors the oil level in the azimuth turntable bearing reservoir. Electrically interlocked stow pins in elevation and azimuth are equipped. The interlock switches send logic signals to the pedestal control unit, which automatically inhibits the respective drive motor power amplifier. The pedestal assembly is also equipped with a conveniently placed pedestal disable switch which will enable maintenance personnel to remove all power to the drive motors prior to maintenance or inspection. In addition to these signals, the servo status and command interface receives status and fault signals from the azimuth and elevation power amplifiers. Samples of all low voltage power supply output voltages are transmitted to the data acquisition unit for monitoring.

5-11.2.7 Self-Tests. The self-test modes are self-test 1 and self-test 2. Self-test 1 performs an input/output test on the communications which echoes the given data back to the RDASC processor. Self-test 2 is a diagnostic self-test to fault isolate to the lowest LRU (line replaceable unit). During normal operation, the antenna rotates continuously in azimuth at a maximum speed of 6 RPM and moves in small incremental steps in elevation from -1 degree to +20 degrees at the rate of one step per azimuth revolution. The elevation travel per step is a function of the scan scenario. The pedestal can also operate in azimuth sector scanning mode and elevation scanning with azimuth stepping. The pedestal is driven by commands originating from the RDASC processor via the RS-232 data link.

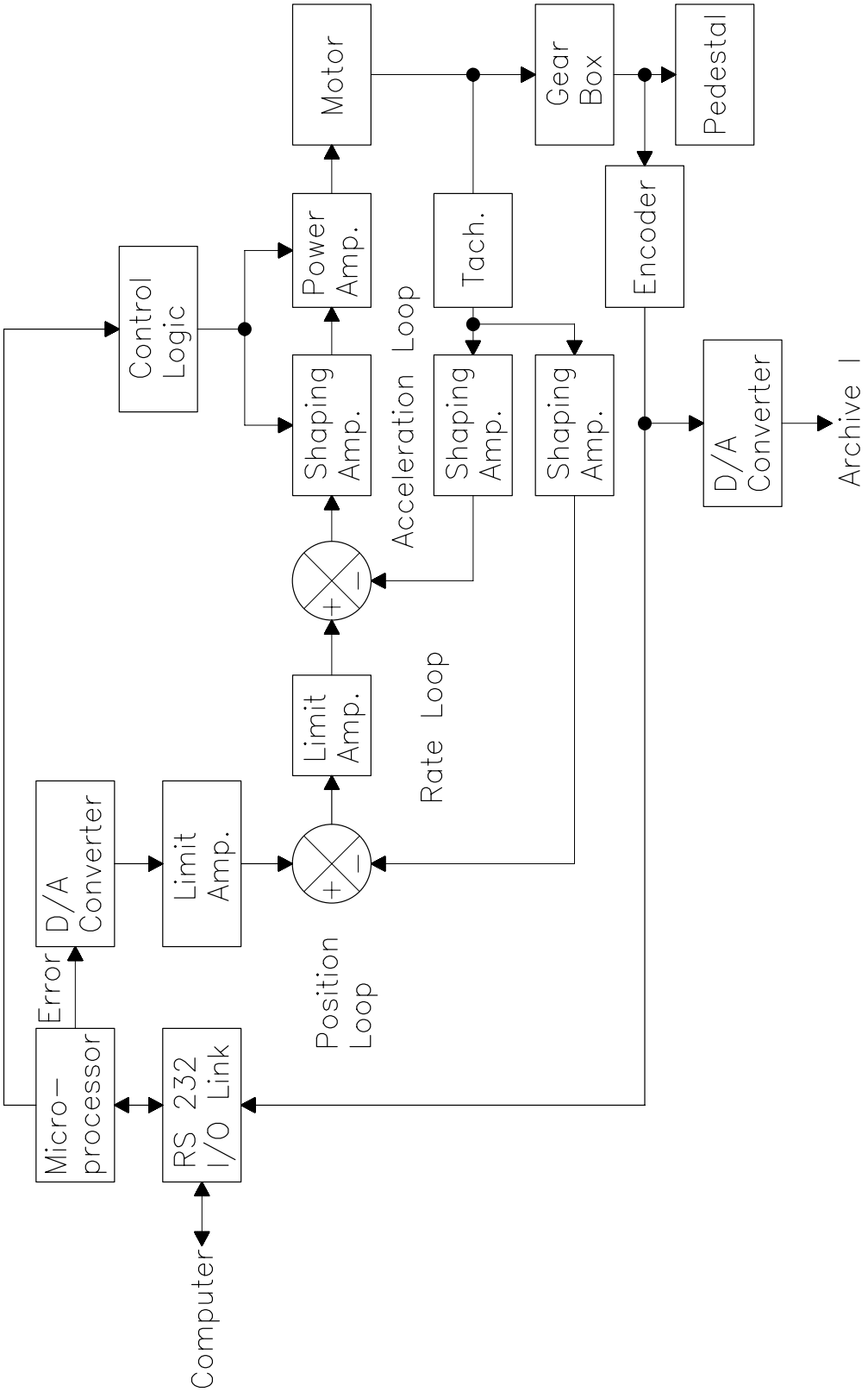


Figure 5-27. Azimuth and Elevation Axis Servo Loop Configuration

5-11.3 ANTENNA POSITIONING ELECTRONICS FUNCTIONAL DESCRIPTION.

The antenna positioning electronics (Figure FO5-24) consists of five major functional areas:

5-11.3.1 Servo Microprocessor Control. The servo microprocessor control is the command center for the antenna control and acts as an interface between the RDASC processor and the microprocessor.

5-11.3.2 Antenna Position Data Interface. The antenna position data interface calculates the antenna position and sends it to the microprocessor.

5-11.3.3 Servo Fault Monitoring. The servo fault monitoring monitors critical operating conditions of the pedestal assembly, sends status and faults of the power amplifier unit to the microprocessor, and collects status and fault data for display on the maintenance terminal.

5-11.3.4 Servo Loop Electronics. The servo loop electronics provides the feedback loops necessary for position, rate, and acceleration of the antenna.

5-11.3.5 RDA Servo Interface. RDA servo interface communicates with the RDASC processor via an RS-232 serial link. Fault and status information, along with rate and velocity data, are sent to the RDASC processor. Rate command data is sent to the antenna positioning electronics.

5-11.3.6 Antenna. The antenna is positioned both in azimuth and elevation under computer control. The computer control function is the control pedestal function of the software running in the RDASC processor. Position commands are sent from the software program through the 8-line COMM MUX UD5A12A19 module in the RDASC processor, which is part of the peripheral interface shown in Figure FO5-24. The output of the peripheral interface is a standard RS-232 serial data interface which is terminated in an RS-232 I/O communications link (RDA servo interface) on the digital card in the pedestal control unit. Position commands (azimuth and elevation) and position feedback from the digital shaft encoder in the antenna position data interface function are sent to the servo microprocessor control function via the data bus.

5-11.3.7 Microprocessor. The microprocessor generates digital azimuth and elevation error signals. These digital signals are converted to analog signals in the digital-to-analog converter in the servo loop electronics function. The output from the digital-to-analog circuits are sent to the azimuth and elevation loops in the analog card, which contains the amplifiers and mixers necessary to implement the second order azimuth and elevation servo loops. The low level drive signals from the analog card are amplified in the Power Amplifier UD5A7 module and are used to drive the azimuth and elevation motors in the pedestal assembly. The motors have integral tachometers which produce a voltage proportional to the change of motor position with respect to time (i.e., rate signals). Rate signals, or feedback, are differential and used as acceleration feedback in the acceleration loop. The motor shafts are connected to gearing which drives the antenna pedestal and digital shaft encoders. The shaft encoders constitute the position feedback signals which are sent back for comparison with the commanded position. The difference between the two generates the position error signals.

5-11.4 SERVO MICROPROCESSOR CONTROL FUNCTION.

The servo microprocessor control (Figure FO5-25) consists of the microprocessor, microprocessor control memory, and programmable timer. It communicates with the RDASC processor via the

RDA servo interface and controls the operation of the servo loop electronics, servo fault monitoring, and antenna position data interface.

5-11.4.1 Microprocessor Control Memory. The microprocessor control memory supervises the flow of signals into and out of the microprocessor by routing each signal to its proper destination in the required sequence of operation. The programmable timer times the movement of input and output signals.

5-11.4.2 Microprocessor Address Information. The microprocessor contains the address information necessary to read the correct data from the RAM. The microprocessor receives the transceiver data from the data bus and outputs the output address onto the address bus for memory operations. The data bus permits the transfer of data to and from memory and other elements of the system. The address bus is used to transmit the address locations of the data. The R/$\overline{W}$ control signal informs the peripherals and memory devices whether the microprocessor is in a read (high) or write (low) state. The $\overline{VMA}$ signal is output to peripherals to indicate a valid memory address.

## 5-11.5 ANTENNA POSITION DATA INTERFACE FUNCTION.

The antenna position data interface (Figure FO5-28) consists of circuitry that interrogates the azimuth and elevation encoders (sheet 1) and circuitry that receives the elicited reply (sheet 2). The reply data, which gives the antenna's position in azimuth and elevation, is converted from serial to parallel form and sent to the microprocessor via the data bus.

5-11.5.1 To interrogate the encoders, the microprocessor sends an 8-bit preset code via address bus bits A8-A15 to a binary word comparator in the interrogation and clock circuitry (Figure FO5-28, sheet 1, zone 7B). The address code is compared to a preset 8-bit code (1111 1111). When they match, the binary word comparator outputs a signal that is combined with control signals (VMA, Ø2, and R/$\overline{W}$) from the microprocessor to clear a D flip-flop. When cleared, the D-flip flop generates a zero output, which is inverted to form the $\overline{AZ\ ENCOD\ INTERR}$ and $\overline{EL\ ENCOD\ INTERR}$ signals. A timing network, consisting of counters and D flip-flops, converts the microprocessor's machine level clock, Ø2, into real-time clocks $\overline{AZ\ ENCOD\ CLK}$ and $\overline{EL\ ENCOD\ CLK}$. These clock signals synchronize the interrogation of the azimuth and elevation encoders.

5-11.5.2 The AZ ENCOD INTERR/$\overline{AZ\ ENCOD\ INTERR}$, and AZ ENCOD CLK/$\overline{AZ\ ENCOD\ CLK}$ signals are sent directly to the A1 Azimuth Encoder (zone 3B) on the UD2A1A3 assembly. The EL ENCOD INTERR/$\overline{EL\ ENCOD\ INTERR}$ and EL ENCOD CLK/$\overline{EL\ ENCOD\ CLK}$ signals are fed through slip rings on the UD2A1A2 assembly to reach the A1 Elevation Encoder.

5-11.5.3 The azimuth encoder outputs the AZ ENCODER DATA/$\overline{AZ\ ENCODER\ DATA}$ signals that represents the position of the antenna referenced to true north. The elevation encoder outputs the EL ENCODER DATA/$\overline{EL\ ENCODER\ DATA}$ signals that represents the position of the antenna referenced to horizontal zero. The serial AZ ENCODER DATA/$\overline{AZ\ ENCODER\ DATA}$ signals are sent directly to a line receiver on UD5A6A2 (Figure FO5-28, sheet 2). The serial EL ENCODER DATA/$\overline{EL\ ENCODER\ DATA}$ signals are fed back through slip rings on UD2A1A2 to reach the line receiver. The azimuth and elevation data is converted from serial to parallel form and sent to tri-state buffers. A three-bit code from the microprocessor, A0-A2, is decoded and used to enable a

specific tri-state buffer so that azimuth or elevation data can be sent via the 8-bit data bus to the microprocessor for processing.

5-11.6 SERVO FAULT MONITORING FUNCTION.

Fault monitors in the Antenna Pedestal Assembly UD2A1 (Figure FO5-29, sheet 1), generate status signals that are grouped in the servo fault and status microprocessor interface (sheet 2) for monitoring by the microprocessor. The interface also receives status and error signals from the Power Amplifier Assembly UD5A7.

5-11.6.1 Status and Error Signals. All status and error signals are input into a zener diode and resistance network. This network suppresses noise that is introduced into the signals during the long cable run from the pedestal to the RDA Data Processor UD5. The signals are sent to four peripheral interface adapters (PIA 1-4) (Figure FO5-29, sheet 4, zones 4A and 3A). Address bus bits A0 and A1 (zone 7B) determine which PIA is selected. They are buffered and combined with microprocessor command signals to form the four-bit PIA selection signal. Data is transmitted from the PIAs to the microprocessor via the data bus. Data transceiver U6 (zone 5B) drives the data bus to and from the PIAs at a certain baud rate. The baud rate is selected by the microprocessor and sent to the data transceiver via address bus bits A8-A15.

5-11.6.2 Microprocessor Control. The microprocessor control also sends signals to the PIAs via the data bus. The AZ POS/$\overline{\text{RATE}}$ SEL signal is sent to the azimuth servo loop to select position mode or rate mode.

5-11.7 SERVO LOOP ELECTRONICS.

The servo loop electronics (Figure FO5-27) processes command signals from the RDASC processor to provide the pedestal assembly with the positioning signals for the antenna. The servo loop electronics consists of an azimuth loop and an elevation loop, which are nearly identical (Figure FO5-24). The following discussion pertains only to the azimuth loop. The elevation loop is discussed where there are differences.

5-11.7.1 Command Data. The command data from the RDASC processor is received by the RDA servo interface, processed by the servo microprocessor control, and sent to the servo loop electronics via the 8-bit data bus. It is received by two banks of D-latches (Figure FO5-27, sheet 1, zones 3A and 3B) in the digital-to-analog (D/A) conversion section of the servo loop electronics. The microprocessor controls the enabling of the D-latches through code sent via the address bus. Bits A8-A15 are compared with 8 bits of preset code, set by pull-up resistors in RP2 (Figure FO5-27, sheet 1, zone 5A). If all bits match, the comparator outputs a signal that enables a demultiplexer. The demultiplexer converts three additional bits of address code, A0-A2, into four signals that control activation of the D-latches. The D-latches pass the digital data from the data bus to two digital-to-analog converters. The D/A Converter U25 (Figure FO5-27, sheet 1, zone 2A) outputs the AZ D/A OUT signal to the azimuth loop. D/A Converter U23 outputs the AZ D/A POS signal, which is used for monitoring the data. Variable resistors R1 and R5 are used to adjust the gain and variable resistors R2 and R6 are used to adjust the offset of the D/A converters.

5-11.7.2 AZ D/A OUT Signal. The AZ D/A OUT signal is buffered and filtered (Figure FO5-27, sheet 2, zone 10B) before being applied to the position loop. The AZ NOTCH IN

and AZ NOTCH OUT signals provide for monitoring of the azimuth signal before and after the notch filter. The azimuth loop is normally in the position mode, which is used to stow the antenna to a desired position. In position control mode, the RDASC processor sends angular position data, Ø, to the servo loop electronics via the servo microprocessor control. The microprocessor sends a logic '1' along the AZ POS/$\overline{\text{RATE}}$ SELECT signal to keep the proper contacts of switch U52 (Figure FO5-27, sheet 2, zone 9B) closed. The position data is monitored via the AZ POS ERROR signal. When rate control mode is commanded, the RDASC processor sends angular rate data, Ø, to the servo loop electronics via the servo microprocessor control. The microprocessor sends a logic 'Ø' along the AZ POS/$\overline{\text{RATE}}$ SEL signal to switch the contact of switch U52, allowing the rate data to feed through the loop. The rate data is monitored via the AZ RATE CMD signal.

5-11.7.3 In the elevation position loop (Figure FO5-27, sheet 3, zone 8A), EL (+) PRELIM and EL (-) PRELIM signals are introduced by the microprocessor to open the entire servo loop if the antenna position is above or below its preset limits.

5-11.7.4 The azimuth signal output from the position loop, representing the desired angular rate, is compared to the actual angular rate of the antenna. The tachometer sends the actual rate to the velocity loop via the AZ TACH (+) signal (Figure FO5-27, sheet 2, zone 8A). The difference signal is filtered and then sent to the Notch Filter Card UD5A6A3. The notch filter communicates directly with the Analog Card UD5A6A1 to level off oscillations occurring in slow-to-mid range azimuth rotational speed. The signal is then scaled and output to the acceleration loop.

5-11.7.5 The AZ TACH (+) signal is differentiated in the acceleration loop and added to the velocity difference signal, which represents desired acceleration. The resulting acceleration signal is filtered, scaled, and integrated to create a velocity signal, AZ RATE OUT, at which the motors must be driven. The AZ RATE OUT signal is sent to the power amplifiers and to the error signal selection and A/D conversion for monitoring by the microprocessor.

5-11.7.6 During azimuth acceleration test, the acceleration loop is switched into a rate mode to safety test unknown motor-load parameters and dynamics. Azimuth acceleration test is initiated by switching AZ ACCEL TEST connector J13 to the ground position via jumper JP1. This inputs a logic 'Ø' to switches U52, U53, and U54. Normally open contacts of switch U52 close, allowing the AZ TACH (+) signal to enter the loop without being differentiated. Normally open contacts of switch U53 close, grounding the input to the acceleration loop. Switching of contacts of switch U54 eliminate the integration of the output signal. The AZ TACH (+) signal passes through the acceleration loop and is directly monitored by the microprocessor via the AZ RATE OUT signal.

5-11.7.7 The AZ RATE OUT signal is sent, as AZ PWR AMP CMD, to the Azimuth Power Amplifier UD5A7A1 (Figure FO5-27, sheet 5, zone 5B). The signal is amplified, and sent to the Choke Assembly UD5A25 where it is smoothed by inductors L1 and L2, and output as the AZ MOTOR DR (+,-) signals with an output power of up to 4 kW. These pulse-width-modulated power signals are sent to Azimuth Motor UD2A1A3B1 (Figure FO5-27, sheet 6, zone 6B), which in turn drives the antenna. A tachometer connected to the motor sends back its rate information via the AZ TACH signal.

5-11.7.8 Three-phase, 120/208 Vac power is applied to the amplifier when the 3ϕ PWR DISABLE signal provides a return for relay K1 (Figure FO5-27, sheet 5, zone 7A). Relay K1 energizes and its contacts close, allowing power to be applied to the amplifier. The power is

monitored via lamps DS1, DS2, and DS3. All lamps are lit if power is applied. Blower A7B1 (Figure FO5-27, sheet 5, zone 6A), powered by 120/208 Vac, operates continuously to cool the power amplifiers by blowing hot air away from the units.

5-11.7.9 High-voltage (HV) monitor A7A3 (Figure FO5-27, sheet 5, zone 4A) monitors the high voltage to the power amplifier. It sends to the servo fault and status microprocessor interface a HV BUSS OV VOLT signal for a power level greater than 200 Vdc. The HV monitor outputs a HV BUSS UNDER VOLT signal for a power level less than 140 Vdc.

5-11.7.10 A fault monitor (Figure FO5-27, sheet 5, zone 4B) located within the Azimuth Power Amplifier Assembly A7A1 monitors the current, temperature, and power supply of the amplifier. If the amplifier is drawing current above a preset threshold, a digital $\overline{\text{AZ PWR AMP CUR FLT}}$ signal is output to the servo fault and status microprocessor interface.

5-11.7.11 The AZ PWR AMP PS FLT signal is output when an internal power supply within the power amplifier fails. The AZ PWR AMP OT FLT signal is output if the temperature of the amplifier exceeds a preset limit. Circuitry within the power amplifier shuts down operation automatically under any of these three conditions.

5-11.7.12 Analog test and error signals from the azimuth and elevation servo loops are input into analog multiplexers (Figure FO5-27, sheet 4, zones 4A and 4B) in the error signal selection and A/D conversion circuitry. A comparator (Figure FO5-27, sheet 4, zone 3B) compares a code sent from the microprocessor control via the address bus, A8-A15, with a digital code determined by pull-up settings of resistor RP3. If they match, the comparator outputs an enable signal to transceiver U31 (Figure FO5-27, sheet 4, zone 2A). The transceiver receives an 8-bit code from the microprocessor and sends this code to D-latch U32 (zone 5B). This code is then used to select one of the two multiplexers and which of the multiplexer's inputs is selected. The selected signal is sampled and held at a constant voltage level to facilitate analog-to-digital conversion. Additional decoding is performed on address code A1-A3 by demultiplexer U30, generating a signal to enable the A/D converter. The digital test or error signal is sent by the transceiver to the microprocessor control via the data bus.

## 5-11.8 RDA SERVO INTERFACE.

During normal operation the rate control mode is active. The RDASC processor sends rate information, $\theta$, to the RDA servo interface via RDASC 1 IN on the RS-232C serial link (Figure FO5-26, sheet 2). This signal is used to control the angular rate of the servos. In position, or local maintenance mode, the RDASC processor sends position information, r, to the RDA servo interface via RDASC 1 IN (sheet 1). The present position of the servos is fed back to the RDASC processor via RDASC 1 OUT during both rate control and local maintenance modes. For redundant systems, rate or position information for Channel 2 is sent via RDASC 2 IN. The present position of the servos is fed back to the RDASC processor via RDASC 2 OUT. The RDASC 2 IN and RDASC 2 OUT signals are not used in single channel systems.

5-11.8.1 Functionally, during rate control mode, the RDASC processor selects a desired position for the servos and selects a desired angular rate for the servos to turn to achieve the desired position (Figure 5-28). The actual position of the servos is fed back to the RDASC processor from the

encoders and compared to the desired position. The difference, or error signal, is differentiated and scaled, to form an error rate. This error rate is added to the desired rate to form the rate that is sent to the RDA servo interface. Doublet switching is used when the initial antenna position varies greatly from the desired position. It allows for a +/- 45-degree change in the position of the servos so that the antenna can be moved quickly to its desired position. During position control mode, the RDASC processor sets the desired rate at zero and sends only position data to the antenna position electronics for stowing.

5-11.8.2 The rate or position data is sent asynchronously from the RDASC processor via one serial line of the 8-line COMM MUX UD5A12A19 (Figure FO5-26, sheet 2, zone 3B). It is routed through Convenience Panel UD5A16 and Data Acquisition Unit UD5A3 and input, as the RDASC 1 IN signal, to combinational circuitry performing as a 2:1 multiplexer on Digital Card UD5A6A2 (sheet 1, zone 6A). The other input to this multiplexer circuitry, RDASC 2 IN, is not used in single channel systems. In redundant systems, rate or position data is sent asynchronously from the RDASC processor of Channel 2 via one serial line of 8-line COMM MUX UD105A12A19 (sheet 2, zone 5A). It is routed through Convenience Panel UD105A16 and Data Acquisition Unit UD105A3 and input as the RDASC 2 IN signal, to combinational circuitry performing as a 2:1 multiplexer (sheet 1, zone 6A). Selection signal $\overline{J2}$/J3 SEL determines whether RDASC 1 IN or RDASC 2 IN is output from the multiplexer.

5-11.8.3 During a write of this data into the microprocessor control's memory, address bits corresponding to the microprocessor's memory location are sent along the address bus to the RDA servo interface. (Figure FO5-26, sheet 1, zone 7B). Bits A8-A15 are compared to a code preset by pull-up resistors. If they match, an $\overline{\text{ADRS ENBL}}$ signal is generated, enabling the decoding of bits A1-A3. The $\overline{J2}$/J3 SEL signal is generated to select the input of the 2:1 multiplexer. The RDASC 1 IN (or RDASC 2 IN signal in a redundant system) signal is sent, as UART DATA IN, to a universal asynchronous receiver transmitter (UART). The UART converts the serial UART DATA IN signal to an 8-bit parallel signal, UART DATA, and places it on the microprocessor's data bus via a transceiver enabled by the $\overline{\text{ADRS ENBL}}$ signal.

5-11.8.4 Data is sent from the microprocessor control to the RDASC in a similar way. Address bus bits A1-A15 are decoded. The data transceiver drives parallel data along the 8-bit data bus to the UART. The $\overline{J2}$/J3 SEL signal activates combinational circuitry that comprises a 1:2 demultiplexer. The UART sends the UART DATA OUT signal to the demultiplexer, which sends the RDASC 1 OUT signal (or RDASC 2 OUT signal, if selected, in redundant systems) through the data acquisition unit and convenience panel to the 8-line COMM MUX UD5A12A19. In redundant systems, RDASC 2 OUT is sent through the DAU and convenience panel of Channel 1 and then through the DAU and convenience panel of Channel 2 before being applied to 8-line COMM MUX UD105A12A19.

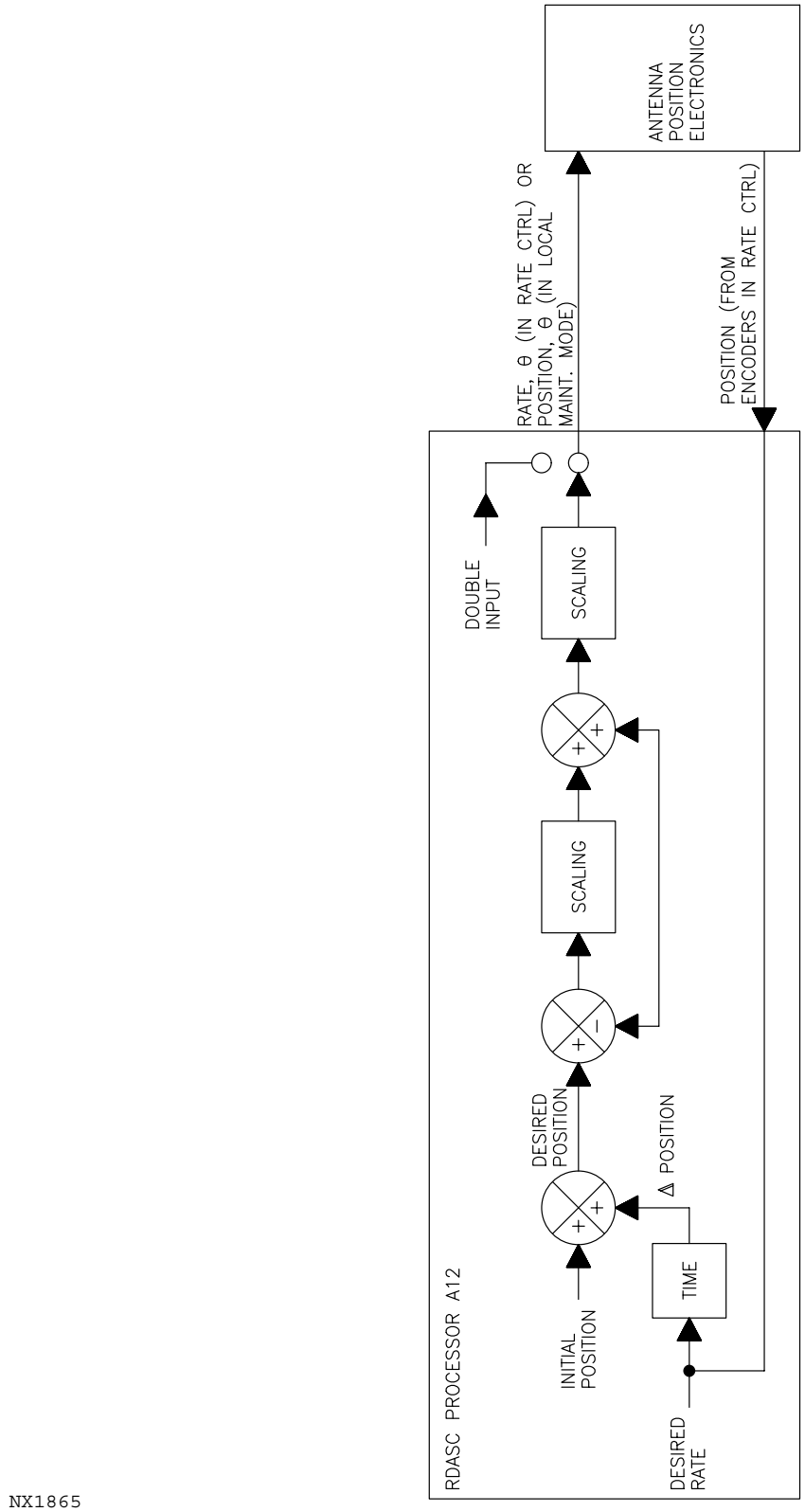


Figure 5-28. Functional Representation of Processing Performed in RDASC Processor

5-1 1.9 ON-LINE PERFORMANCE MONITORING.

There are basically four performance monitoring routines involved with the antenna pedestal which are discussed in the following paragraphs.

5-1 1.9.1 Self-Test 1. Self-test 1 checks the RS-232 communication link between the RDASC processor and the pedestal electronics at start-up (Table 5-27).

5-1 1.9.2 Self-Test 2. Self-test 2 is a series of tests performed on circuitry within the antenna pedestal (Table 5-27). This test is performed at start-up, provided the elevation servo is not in dead limit.

5-1 1.9.3 Pedestal BIT Data. Pedestal BIT data is monitored during normal data gathering operations and is read and reported to the RDASC approximately once every 3 seconds (Table 5-28).

5-1 1.9.4 CPCI 01 (RDASC) Software. CPCI 01 (RDASC) software generated RDA alarms.

5-1 1.9.5 Cold Startup or Full Restart Command. When a cold startup or full restart command is issued by the RDASC processor, communication with the pedestal is established and the pedestal Self-test status checks 1 and 2 are exercised by issuing appropriate commands to the pedestal and checking the test results. Prior to performing Self-test 2, the pedestal BITE data is read and analyzed. If the ELEVATION IN DEAD LIMIT (308) alarm is set, an attempt to drive the pedestal out of the dead limit is made by turning the pedestal power off, then on, and issuing a pedestal park command. After the pedestal park command is issued, the pedestal BITE data is read and analyzed again. If alarm code 308 is cleared, Self-test 2 is performed. If alarm code 308 is still set after issuance of the pedestal park command, Self-test 2 is not performed and the initialization sequence continues without Self-test 2 being performed. Upon successful completion of Self-test 1 and Self-test 2 (if performed), normal I/O with periodic BIT monitoring is established. The Self-test Status and Data is included in the RDA Performance Data. If any errors occur during the pedestal initialization sequence, the PEDESTAL INITIALIZATION ERROR (450) alarm is set and the following appropriate occurrence alarms describing the initialization difficulty are set:

- PEDESTAL I/O STATUS ERROR (463)
- PEDESTAL SELF TEST 1 ERROR (604)
- PEDESTAL SELF TEST 2 ERROR (605)

Pedestal initialization status is included in RDA Performance Data.

5-1 1.9.6 Fast Restart. The same processing as specified above is performed for fast restart, except that Self-test 2 is not performed. If a warm startup command is issued by the RDASC processor, and the communication with the pedestal is not established (i.e., the channel is non-controlling), communication with the pedestal is initialized and Self-test 1 is performed during the warm startup sequence.

5-1 1.9.7 Normal I/O Processing. If 10 consecutive I/O errors or data alignment errors occur during normal I/O processing, the PEDESTAL I/O STATUS ERROR (463) is set, and the time

tagged error status is included in the RDA Performance Data. If three Pedestal I/O Error alarms occur within five minutes, the MULT PED I/O ERROR-RDA FORCED TO STBY (467) is set.

5-1 1.9.8 Antenna Positioning Servo. During the normal functioning of the antenna positioning servo, the returned (to the processor) encoder position/rate is compared to the commanded position/rate (angle rate match flag is set). If this comparison is outside the established threshold for a period exceeding 5 seconds, after receipt of a start elevation cut command, a fault in the pedestal control servomechanism system is indicated. Under these conditions, PEDESTAL DYNAMIC FAULT-RDA FORCED TO STBY (336) alarm is set and the RDA INOP state is declared.

5-1 1.9.9 Angle Rate Match Flag. After angle rate match flag is set, the pedestal position is monitored continuously. If the pedestal position remains fixed for more than 30 seconds while a scan is in progress, a PEDESTAL STOPPED-RDA FORCED TO STBY (338) alarm is set. An RDA INOP state is then declared.

5-1 1.9.10 Park Pedestal Command. In response to a park pedestal command, the pedestal is moved to a park position as specified by adaptation data. When the pedestal is within ±1.0 degree of the specified park position, the park pedestal condition is sensed. If the pedestal park position criteria is not satisfied within 15 seconds of the park pedestal command, the PEDESTAL UNABLE TO PARK (339) alarm is set. This alarm forces the RDA INOP state.

5-1 1.10 OFF-LINE DIAGNOSTICS.

The pedestal off-line diagnostics are part of RDASOT and are thoroughly described in the RDASOT User's Guide, NWS EHB 6-510-2. The diagnostics consists of Pedestal Diagnostics and Manual Pedestal Control.

5-1 1.10.1 Pedestal Diagnostics. The pedestal diagnostics are responsible for isolating failures within the pedestal. The diagnostics incorporate sensory information from the DAU and the pedestal and use built-in-tests (BITs) residing in the pedestal for the isolation of failures. The four diagnostic subtests are:

5-1 1.10.1.1 Subtest 1 - Voltage Check. Subtest 1 assumes the DAU is operating correctly when it requests the DAU BITE data. After acquiring the BITE data, the subtest checks the pedestal power supply voltages.

5-1 1.10.1.2 Subtest 2 - Self-Test 1. Subtest 2 performs a data turn-around test between the processor and the pedestal by using Self-test 1. Subtest 2 issues a self-test request command to the pedestal and then sends two 16-bit words. The pedestal resends the words received and the subtest ensures that the data is valid. An incorrect data pattern or a timeout indicates a failure in the RS-232 interface. The subtest sends 64 different groups.

5-1 1.10.1.3 Subtest 3 - Pedestal BIT Check. Subtest 3 is responsible for ensuring that the RS-232 interface is operating correctly. Once this is ensured, a status check is performed on the pedestal BIT data. The subtest initializes the azimuth and elevation rates to zero and sets the BIT status bit. A timeout indicates a problem in the RS-232 interface. This subtest then reads in BIT data and verifies its contents.

5-1 1.10.1.4 Subtest 4 - Self-Test 2. Subtest 4 initiates Self-test 2 which is the pedestals built-in diagnostic. While the subtest is waiting for return of the Self-test 2 status code, a message is

displayed every three seconds. If the status code is not returned in 30 seconds, an error message is displayed; otherwise, the status code is displayed. If the status is non-zero, appropriate error messages are also displayed.

5-11.10.2 Manual Pedestal Control. This function permits manual control of azimuth and elevation position and rate. It provides the operator with a readout of the antenna position upon command. It is possible to also command the antenna to assume the parked position. These features are useful, especially for alignment and calibration.

Table 5-27. Self Test Data - Pedestal to RDA Data Processor

| BIT | Self-Test Mode 1 | Self-Test Mode 2 |
|---|---|---|
| Start | 0 | 0 |
| 0 | | Digital PWA |
| 1 | Repeats | Spare |
| 2 | RDADP | Spare |
| 3 | Processor | Spare |
| 4 | Command | Spare |
| | Bits | |
| 5 | 0 - 7 | Spare |
| 6 | | AZ Power Amp |
| 7 | | EL Power Amp |
| Parity | 1/0 | 1/0 |
| Stop | 1 | 1 |
| Start | 0 | 0 |
| 8 | | Analog PWA |
| 9 | Repeats | AZ Motor |
| | RDADP | |
| 10 | Processor | EL Motor |
| 11 | Command | AZ Encoder |
| | Bits | |
| 12 | 8 - 15 | EL Encoder |
| 13 | | NO Failure Found |
| 14 | | Spare |
| 15 | | Spare |
| Parity | 1/0 | 1/0 |
| Stop | 1 | 1 |

Table 5-28. Pedestal BIT Data

| Signal Name | Resultant RDA Alarm | Mode Forced | Half Word/ BIT | Sampling Rate (Approx.) |
|---|---|---|---|---|
| | **NOTE** | | | |
| | All spares are “0”s.<br>No Go is “1” -i.e. Signal Name condition is true. | | | |
| Elevation Axis PCU Data Parity | Elevation PCU Data Parity Fault (307) | | 1/0 | 0.2 to 1Hz |
| Elevation Axis Dead Limit | Elevation in Dead Limit (308) | MMAND | 1/1 | 0.2 to 1Hz |
| Spare | | | 1/2 | 0.2 to 1Hz |
| Elevation Axis + Normal Limit | Elevation +Normal Limit (310) | MMAND | 1/3 | 0.2 to 1Hz |
| Elevation Axis - Normal Limit | Elevation -Normal Limit (311) | MMAND | 1/4 | 0.2 to 1Hz |
| Spare | | | 1/5 | 0.2 to 1Hz |
| Elevation Axis Encoder Light Source Monitor | Elevation Encoder Light Failure (313) | MMAND | 1/6 | 0.2 to 1Hz |
| Elevation Axis Gearbox Oil Level | Elevation Gear Box Oil Level Low (314) | MMAND | 1/7 | 0.2 to 1Hz |
| Spare | | | 1/8 | 0.2 to 1Hz |
| Elevation Axis Servo Amp Inhibit | Elevation Amplifier Inhibit (300) | MMAND | 1/9 | 0.2 to 1Hz |
| Elevation Axis Servo Amp Short Circuit | Elevation Amplifier Current Limit (301) | MMAND | 1/10 | 0.2 to 1Hz |
| Elevation Axis Servo Amp Overtemp | Elevation Amplifier Overtemp (302) | MMAND | 1/11 | 0.2 to 1Hz |
| +150V Overvoltage | Pedestal +150 Overvoltage (303) | MMAND | 1/12 | 0.2 to 1Hz |
| +150V Undervoltage | Pedestal +150 Undervoltage (304) | MMAND | 1/13 | 0.2 to 1Hz |
| Elevation Axis Motor Overtemp | Elevation Motor Overtemp (305) | MMAND | 1/14 | 0.2 to 1Hz |

Table 5-28. Pedestal BIT Data (continued)

| Signal Name | Resultant RDA Alarm | Mode Forced | Half Word/ BIT | Sampling Rate (Approx.) |
|---|---|---|---|---|
| Elevation Axis Stow Pin Engaged | Elevation Stow Pin Engaged (306) | INOP | 1/15 | 0.2 to 1Hz |
| Azimuth Axis PCU Data Parity | Azimuth PCU Data Parity Fault (322) | MMAND | 2/0 | 0.2 to 1Hz |
| Azimuth Axis Encoder Light Source Monitor | Azimuth Encoder Light Failure (324) | MMAND | 2/1 | 0.2 to 1Hz |
| Azimuth Axis Gearbox Oil Level | Azimuth Gearbox Oil Level Low (325) | MMAND | 2/2 | 0.2 to 1Hz |
| Azimuth Axis Bull Gear Oil Level | Bull Gear Oil Level Low (326) | MMAND | 2/3 | 0.2 to 1Hz |
| Spare | | | 2/4 | 0.2 to 1Hz |
| El Handwheel Engaged | same (328) | INOP | 2/5 | 0.2 to 1Hz |
| Az Handwheel Engaged | same (329) | INOP | 2/6 | 0.2 to 1Hz |
| Spare | | | 2/7 | 0.2 to 1Hz |
| Azimuth Axis Servo Amp Inhibit | Azimuth Amplifier Inhibit (315) | MMAND | 2/8 | 0.2 to 1Hz |
| Azimuth Axis Servo Amp Short Circuit | Azimuth Amplifier Current Limit (316) | MMAND | 2/9 | 0.2 to 1Hz |
| Azimuth Axis Servo Amp Overtemp | Azimuth Amplifier Overtemp (317) | MMAND | 2/10 | 0.2 to 1Hz |
| Spare | | | 2/11 | 0.2 to 1Hz |
| Spare | | | 2/12 | |
| Azimuth Axis Motor Overtemp | Azimuth Motor Overtemp (320) | MMAND | 2/13 | 0.2 to 1Hz |
| Azimuth Axis Stow Pin Engaged | Azimuth Stow Pin Engaged (321) | INOP | 2/14 | 0.2 to 1Hz |
| Spare | | | 2/15 | 0.2 to 1Hz |
| Spare | | | 3/1 | 0.2 to 1Hz |
| Spare | | | 3/2 | 0.2 to 1Hz |
| Spare | | | 3/3 | 0.2 to 1Hz |

Table 5-28. Pedestal BIT Data (continued)

| Signal Name | Resultant RDA Alarm | Mode Forced | Half Word/ BIT | Sampling Rate (Approx.) |
|---|---|---|---|---|
| Spare | | | 3/4 | 0.2 to 1Hz |
| Spare | | | 3/5 | 0.2 to 1Hz |
| Spare | | | 3/6 | 0.2 to 1Hz |
| Spare | | | 3/7 | 0.2 to 1Hz |
| Spare | | | 3/9 | 0.2 to 1Hz |
| Spare | | | 3/10 | 0.2 to 1Hz |
| Spare | | | 3/11 | 0.2 to 1Hz |
| Azimuth Axis Servo Amp P.S. | Azimuth Amp Power Supply Fail (334) | MMAND | 3/12 | 0.2 to 1Hz |
| Elevation Axis Servo Amp P.S. | Elevation Amp Power Supply Fail (335) | MMAND | 3/13 | 0.2 to 1Hz |
| Servo Off | Pedestal Dynamic Fault (336) | | 3/14 | 0.2 to 1Hz |
| Pedestal Interlock | Pedestal Interlock Open (337) | INOP | 3/15 | 0.2 to 1Hz |

# Section 5-12. Power Distribution

## 5-12.1 INTRODUCTION.

The power generation and distribution system has two power sources and a common power distribution system. Utility power and generator power are both furnished within the generator shelter. Three-phase commercial power is connected to the generator shelter utility Main Power Disconnect Switch box UD10S1. When the disconnect switch is closed, normal utility three-phase power is applied to the power auto-transfer switch. Three-phase emergency power is supplied to the auto-transfer switch from the engine generator (E/G). The AC output of the E/G is routed through a three-phase molded-case circuit breaker. This circuit breaker provides overload protection. The auto-transfer switch accepts and distributes three-phase power to the RDA equipment shelter main power distribution panel and two-phase power to the generator shelter. At sites with a Transition Power Source (TPS), three-phase power is also routed via fused disconnects or circuit breakers to the TPS which supplies power to secondary power distribution panels. The main power distribution panel distributes power to the TPMS main power distribution panel (if installed), to assemblies within the RDA equipment shelter, and to the secondary power distribution panel(s) (if a TPS is not installed), which distributes it further. In FAA redundant systems, the main power distribution panel supplies power to two secondary power distribution panels, which further distribute power. In NWS redundant systems, a main power distribution panel supplies power to three secondary power distribution panels, if a TPS is not installed. Three-phase utility power is the normal power used for distribution. Normally, commercial power will be supplied to facility controls through the auto-transfer switch. If commercial power fails or drops below pre-determined limits, the E/G control panel starts the E/G. Additionally, at NEXRAD sites with a TPS, three-phase power to the critical equipment is maintained for at least 9 minutes. The auto-transfer switch then transfers the facility loads to the output of the E/G. The RDA power distribution system consists of the following three functions:

- RDA Group AC Power Generation and Distribution
- RDA Equipment Power Distribution
- NWS Redundant Configuration RDA Remote Power Shutdown

**NOTE**

This section refers to the RDADP as UD5, the Receiver as UD4, the Transmitter as UD3, and the Waveguide Pressurization Unit as UD6. Unless otherwise specified, the information also applies to redundant systems UD105, UD104, UD103, and UD106.

## 5-12.2 RDA GROUP AC POWER GENERATION AND DISTRIBUTION.

The AC power and generation function is discussed in detail using functional diagrams in EHB 6-550, Section 1-3, System Description, paragraph 1-3.1 of the WSR-88D Real Property Installed Equipment Group manual. Redundant sites, refer to EHB 6-553, Section 1-3, paragraph 1-3.1 for

the AC power and generation discussion. Only a brief description is included here to indicate how the various equipments receive their power.

5-12.2.1 Auto-Transfer Switch UD10A1. Depending on the source selected, the transfer switch routes three-phase 120/208V power to the following locations: (Refer to NWS EHB 6-550, Figure FO1-1 or Figure FO1-2. Redundant sites, refer to NWS EHB 6-553, Figure FO1-1.)

- Phase A and C to the generator shelter main power distribution panel.
- Phase A, B, and C to the electrical equipment shelter main power distribution panel. Also, three-phase power is routed to the transition power source via a 200 amp fused disconnect (UD10TPS1) (if installed).

5-12.2.2 Generator Shelter Main Power Distribution Panel UD10A2. The generator shelter main power distribution panel receives phase A and phase C of the three-phase input power from the auto-transfer switch and provides power to the following equipment in the generator shelter:

- Exhaust and Fan Motors
- Generator Room Heater
- Interior Lights
- Receptacles
- Exterior Lights
- Generator Block Heater

5-12.2.3 Equipment Shelter Main Power Distribution Panel UD7A2. Three-phase power is received from the auto-transfer switch in the generator shelter at the RDA main power distribution panel. The power panel distributes power to the following assemblies in the equipment shelter and to the transition power maintenance shelter (TPMS) if installed: (Refer to NWS EHB 6-550, Figure 1-14, and Figure FO1-3, sheets 1 through 8).

- Radome Heater(s)
- Radome Interior Lights and Recepticals
- Tower Stair Lights
- Radome Vent System
- Aircraft Warning Lights
- Telephone (If TPS not installed)
- Alarm Panel
- Air Conditioners #1 and #2
- Interior/Exterior Lights and Recepticals

- Fire Detection Subsystem Panel (If TPS not installed)
- Transmitter Vent System
- Shunt Trip
- Magnetic Contactor Coil (TPS not installed)
- Secondary Power Distribution Panel (TPS not installed)
- CEC Coil Control Panel (only at sites with Transition Power Source (TPS))
- TPMS Shelter Power Distribution System Panel

For power to be applied to the secondary power distribution panel, the magnetic contactor coil must be energized. At sites with a transition power source, the secondary power distribution panel and the magnetic contactor coil receive power from either TPS Output Fused Disconnect UD61A5S3 or from MBM UOB Breaker UD64CB3 (Refer to NWS EHB 6-550, Figure FO1-5).

5-12.2.4 Equipment Shelter Secondary Power Distribution Panel UD7A3. The RDA Secondary PDP UD7A3 receives three-phase 120/208 Vac power from the main PDP through Magnetic Contactor UD7S6 or from the transition power source through Magnetic Contactor UD7S6. (Refer to NWS EHB 6-550 Figure 1-15, Figure FO1-3, sheets 9 and 10, Figure FO4-1, and Figure FO4-2 for details.) When energized, this contactor allows the secondary PDP to distribute power to the following assemblies in the equipment shelter:

- Transmitter and Transmitter Utility Outlet
- Fire Detection Panel/Telephone (If TPS is installed)
- RDA Data Processor via FL1
- RPG (if collocated at RDA site)
- Pedestal Motor via FL2
- Waveguide Pressurization Unit via FL5
- RDA Signal Processor via FL3
- RDA Receiver via FL4
- Wideband Cabinet
- Surge Suppressor

5-12.2.5 FAA Redundant Equipment Shelter Main Power Distribution Panel UD7A2. FAA redundant systems contain a main power distribution panel and two secondary power distribution panels. (Refer to NWS EHB 6-553, Figure 1-15, Figure FO1-3, sheets 1 through 6, and Figure 4-3). The main power distribution panel distributes power to the following assemblies in the equipment shelter:

- Radome Heaters #1 through #3
- Radome Lights/Recepticals
- Tower Stair Lights
- Radome Vent System
- Aircraft Warning Lights
- Telephone
- Alarm Panel and Auxiliary Relay Box
- FAA Remote Monitoring System
- Air Conditioners #1 and #2
- Interior/Exterior Lights and Recepticals
- Fire Detection Subsystem Panel
- Transmitter #1 and #2 Vent System
- Contactor #1 and #2
- Shunt Trip
- Secondary Power Distribution Panel #1 and #2

5-12.2.6 FAA Redundant Equipment Shelter Secondary Power Distribution Panel #1 UD7A3. The FAA redundant secondary PDP #1 receives three-phase 120/208 Vac power from the main PDP through Magnetic Contactor #1 UD7S6. When energized, this contactor allows the secondary PDP #1 to distribute power to the following assemblies in the equipment shelter: (Refer to NWS EHB 6-553, Figure 1-16, Figure FO1-3, sheets 7 through 9, and Figure 4-3, sheet 1).

- Transmitter #1
- Transmitter Utility Outlet #1
- RDA Data Processor #1
- RPG #1
- Waveguide Pressurization Unit #1
- Signal Processor #1
- Receiver #1
- Surge Suppressor #1 UD7A11

5-12.2.7 FAA Redundant Equipment Shelter Secondary Power Distribution Panel #2 UD7A29. The FAA redundant secondary PDP #2 receives three-phase 120/208 Vac power from the main PDP

through Magnetic Contactor #2 UD7S36. When energized, this contactor allows the secondary PDP #2 to distribute power to the following assemblies in the equipment shelter: (Refer to NWS EHB 6-553, Figure 1-17, Figure FO1-3, sheets 10 through 12, and Figure 4-3, sheet 2).

- Transmitter #2
- Transmitter Utility Outlet #2
- RDA Data Processor #2
- RPG #2
- Pedestal Motor
- Waveguide Pressurization Unit #2
- Signal Processor #2
- Receiver #2
- Surge Suppressor #2 UD7A68

5-12.2.8 NWS Redundant Equipment Shelter Main Power Distribution Panel UD7A2. NWS redundant systems contain a main power distribution panel and three secondary power distribution panels. The main power distribution panel distributes power to the following assemblies in the equipment shelter and to the transition power maintenance shelter if installed: (Refer to NWS EHB 6-553, Figure 1-18, Figure 1-19, Figure 1-20, Figure FO1-2, sheets 1 through 5, and Figure 4-4, sheet 1).

- Radome Heaters #1 through #3
- Radome Lights and Recepticals
- Tower Stair Lights
- Radome Vent
- Aircraft Warning Lights
- Alarm Panel and Auxiliary Relay Box
- Air Conditioners #1 and #2
- Interior/Exterior Lights and Recepticals
- Fire Detection Subsystem Panel (sites with TPS, see CEC-DP UD7TPS2)
- Transmitter #1 and #2 Vent System
- Contactor #3 (for non-TPS sites)
- Shunt Trip

- Secondary Power Distribution Panels #1 through #3 (For non-TPS sites)
- Snow Shelter Panel (only at sites with Snow Shelters)
- TPMS Shelter Power Distribution System Panel

However, at sites with a transition power source (TPS), the secondary power distribution panels and contactor #3 receive power from the TPS or site/utility power via the TPS Output Fused Disconnect UD61A5S3 via the Power Panel, Critical Equipment Contactor - Distribution Panel (CEC-DP) UD7TPS2. (Refer to NWS EHB 6-553, Figure FO1-6).

5-12.2.9 NWS Redundant Equipment Shelter Secondary Power Distribution Panel #1 UD7A3. The NWS redundant secondary PDP #1 receives three-phase 120/208 Vac power from the main PDP or from CB1 in the CEC-DP Power Panel UD7TPS2 through Magnetic Contactor #1 UD7S6. When energized, the contactor allows the secondary PDP #1 to distribute power to the following assemblies in the equipment shelter: (Refer to NWS EHB 6-553, Figure 1-20, Figure 1-21, Figure FO1-2, sheet 6, and Figure 4-4, sheet 2).

- Transmitter #1
- Transmitter Utility Outlet #1
- Signal Processor #1
- Receiver #1
- Surge Suppressor #1 UD7A11

5-12.2.10 NWS Redundant Equipment Shelter Secondary Power Distribution Panel #2 UD7A29. The NWS redundant secondary PDP #2 receives three-phase 120/208 Vac power from the main PDP or from CB2 in the CEC-DP Power Panel UD7TPS2 through Magnetic Contactor #2 UD7S36. When energized, the contactor allows the secondary PDP #2 to distribute power to the following assemblies in the equipment shelter: (Refer to NWS EHB 6-553, Figure 1-20, Figure 1-22, Figure FO1-2, sheet 7, Figure FO1-6, and Figure 4-4, sheet 3).

- Transmitter #2
- Transmitter Utility Outlet #2
- Signal Processor #2
- Receiver #2
- Surge Suppressor #2 UD7A68

5-12.2.11 NWS Redundant Equipment Shelter Secondary Power Distribution Panel #3 UD7A30. The NWS redundant secondary PDP #3 receives three-phase 120/208 Vac power from the main PDP or from CB3 in the CEC-DP Power Panel UD7TPS2 through Magnetic Contactor #3 UD7S37. When energized, the contactor allows the secondary PDP #3 to distribute power to the following assemblies in the equipment shelter: (Refer to NWS EHB 6-553, Figure 1-20, Figure 1-23, Figure FO1-2, sheets 8 and 9, Figure FO1-6, and Figure 4-4, sheet 1).

- RDA Data Processors #1 and #2
- Pedestal Motor
- Waveguide Pressurization Units #1 and #2
- Microwave Line-of-Sight Cabinet (if installed)
- Surge Suppressor #3 UD7A69

5-12.3 RDA EQUIPMENT POWER DISTRIBUTION.

The RDA shelter equipment receives AC power from the secondary power distribution panel(s) and produces the required voltages necessary for equipment operation. Only the receiver cabinet and RDADP cabinet power distribution are discussed in this section. The following references are provided for the detailed power distribution discussion on the transmitter, pressurization unit, and wideband communication equipment:

- EHB 6-511 WSR-88D Transmitter Field Maintenance Manual, Chapter 2, paragraphs 2-2.2.5 and 2-3.6
- EHB 6-512 Model HA-4 Dehydrator Unit Installation and Operation Manual, Figure 3
- EHB 6-512-1 Model HA4X2 Dual Outlet Dehydrator Unit Installation and Operation Manual, Figure 3
- EHB 6-545 WSR-88D Wideband Communications Equipment Maintenance Manual

5-12.3.1 RDA Receiver Cabinet UD4 Power Distribution. The RDA receiver power distribution function is detailed on Figure FO7-13, sheets 1 through 5. Single phase (Bϕ) AC power of 120/208 Vac from the secondary power distribution panel is received at TB5 of the receiver cabinet (sheet 1). The AC voltage is distributed to the various power supplies, blower fans, and the receiver protector in the antenna pedestal assembly. The power supplies develop DC voltages that are used throughout the receiver cabinet, receiver front end, and RDADP signal processor.

5-12.3.1.1 Receiver Cabinet UD4 AC Distribution. Terminal board UD4TB5 (Figure FO7-13, sheet 1) distributes the AC voltages to the following locations in the receiver cabinet and receiver front end.

- Receiver Blower Fans UD4B1 and UD4B2

  UD4TB5-6 connects 115 Vac to the receiver cabinet blower fans B1 and B2 via UD4TB4-2 for cabinet cooling.

- Power Supplies UD4PS1, PS2, PS4, PS5, PS6, PS7, PS8, and PS9

  UD4TB5-4 connects 115 Vac to the following power supply inputs:

  - UD4PS1 TB1-1 (sheet 1, zone 8B)

- UD4PS8 TB1-1 (sheet 2, zone 7A)
- UD4PS9 TB1-1 (sheet 2, zone 5A)
- UD4PS7 TB1-1 (sheet 2, zone 7A)
- UD4PS2 TB1-1 (sheet 2, zone 7B)
- UD4PS6 TB1-1 (sheet 2, zone 9A)

UD4TB5-5 connects 115 Vac to the following power supply inputs:

- UD4PS5 TB1-1 (sheets 3, 4, and 5, zone 11B)
- UD4PS4 TB1-1 (sheet 2, zone 2B)

All power supplies have neutral and ground connections through UD4TB5 and UD4TB1 on Figure FO7-13, sheet 1.

- Receiver Protector UD2A3/UD2A7*

The receiver protector (sheets 3, 4, and 5, zone 1A) receives 115 Vac from UD4TB5-4 via cables W10/110* and 2W20/2W26*.

5-12.3.1.2 Power Supply Outputs. The receiver power supplies develop the following DC voltages:

5-12.3.1.2.1 UD4PS1 (Figure FO7-13, sheet 1) - supplies +/- 18 Vdc to the following circuits:

- AGC Controller UD4A13 (sheet 1, zone 6A) via TB2
- IF Amp/Limiter UD4A9 (sheet 1, zone 6B) via TB2
- Log-Amp Detector UD4A18 (sheet 1, zone 5B) via TB2
- Log-Amp Detectors UD4A12 and A17 (sheet 1, zone 5A) via TB2
- Guard Band IF Amp Assembly UD4A14 (sheet 1, zone 4B) via TB2
- Log-Amp Detector UD4A30 (sheet 1, zone 4B) via TB2
- RF/IF Test Monitor UD4A31 (sheet 1, zone 3B) via TB2
- Interference Detector UD4A19 (sheet 1, zone 3B) via TB2
- IF Attenuator UD4A8 (sheet 1, zone 3A) via TB2
- Mixer Preamplifier UD4A5 (sheet 1, zone 2B) via TB2 and TB3
- RF Detector/Log Amp UD4A29 (sheet 1, zone 2A) via TB2 and TB3
- RF Frequency Generator UD4A1 (sheet 1, zone 1B) via TB2 and TB3

- - - - -

* Used in redundant systems.

- I/Q Phase Detector UD4A10 (sheet 1, zone 1A) via TB2 and TB3
- RF Noise Source UD4A25 (sheets 3, 4, and 5, zone 7A) via TB3
- 4-Position Switch UD4A22 (sheets 3, 4, and 5, zone 7B) via TB3
- 10-Position RF Switch UD4A27 (sheets 3, 4, and 5, zone 7B) via TB3
- 10-Position IF Switch UD4A28 (sheets 3, 4, and 5, zone 5A) via TB3 and TB2
- 2-Position Switch UD4A24 (sheets 3, 4, and 5, zone 6A) via TB3
- +18 Vdc to Low Noise RF Amplifier UD2A4/UD2A8* (sheets 3, 4, and 5, zone 1A) via cables W10/W110* and 2W20/2W26*.

5-12.3.1.2.2 UD4PS2 (Figure FO7-13, sheet 2) - supplies +5 Vdc to the A/D converter (sheet 2, zone 6B).

5-12.3.1.2.3 UD4PS4 (Figure FO7-13, sheet 2) - supplies -9 Vdc to the following circuits:

- 7 Bit RF Test Attenuator UD4A23 (sheet 2, zone 1B) via TB3
- RF Frequency Generator UD4A1 (sheet 2, zone 1B) via TB3
- AGC Controller UD4A13 (sheet 2, zone 1B) via TB2
- RF/IF Test Monitor UD4A31 (sheet 2, zone 1A) via TB2
- 4-Position Switch UD4A22 (sheets 3, 4, and 5, zone 7B) via TB3
- 2-Position Switch UD4A24 (sheets 3, 4, and 5, zone 7A) via TB3

5-12.3.1.2.4 UD4PS5 (Figure FO7-13, sheets 3, 4, and 5) - supplies +5 Vdc to the following circuits:

- RF Frequency Generator UD4A1 (sheets 3, 4, and 5, zone 9B) via TB3
- 7 Bit RF Test Attenuator UD4A23 (sheets 3, 4, and 5, zone 9B) via TB3
- Interference Detector UD4A19 (sheets 3, 4, and 5, zone 9B) via TB2
- AGC Controller UD4A13 (sheets 3, 4, and 5, zone 9A) via TB3
- Preselect Filter UD4A4 (sheets 3, 4, and 5, zone 8A) via TB2 and AGC Controller
- IF Attenuator UD4A8 (sheets 3, 4, and 5, zone 8B) via TB2
- RF/IF Test Monitor UD4A31 (sheets 3, 4, and 5, zone 8A) via TB2
- Receiver Interface UD4A32 (sheets 3, 4, and 5, zone 9A) via TB2
- RDADP HSP UD5A10 (sheets 3, 4, and 5, zone 3B)

- - - - -

* Used in redundant systems.

5-12.3.1.2.5 UD4PS6 (Figure FO7-13, sheet 2) - supplies +9 Vdc to the following circuits:

- RF Frequency Generator UD4A1 (sheet 2, zone 8B) via TB3
- 7 Bit RF Test Attenuator UD4A23 (sheet 2, zone 8B) via TB3
- IF Attenuator UD4A8 (sheet 2, zone 8A) via TB2

5-12.3.1.2.6 UD4PS7 (Figure FO7-13, sheet 2) - supplies -5.2 Vdc to the A/D Converter UD4A13 (sheet 2, zone 6B).

5-12.3.1.2.7 UD4PS8 (Figure FO7-13, sheet 2) - supplies +/- 15 Vdc to the A/D Converter UD4A13 (sheet 2, zone 6A).

5-12.3.1.2.8 UD4PS9 (Figure FO7-13, sheet 2) - supplies +5 Vdc to the following circuits:

- Receiver Interface UD4A32 (sheet 2, zone 4B)
- 4-Position Switch UD4A22 (sheets 3, 4, and 5, zone 7B) via TB3
- 10-Position RF Switch UD4A27 (sheets 3, 4, and 5, zone 7B) via TB3
- 2-Position Switch UD4A24 (sheets 3, 4, and 5, zone 7A) via TB3
- RF Noise Source UD4A25 (sheets 3, 4, and 5, zone 7A) via TB3
- 10-Position IF Switch UD4A28 (sheets 3, 4, and 5, zone 5A) via TB3 and TB2
- RDADP HSP UD5A10 (sheets 3, 4, and 5, zone 3B) via Receiver Interface UD4A32
- Receiver Protector UD2A3 (sheets 3, 4, and 5, zone 1A)

5-12.3.2 RDA Data Processor Cabinet UD5 Power Distribution. Power distribution for the RDADP cabinet is detailed on Figure FO7-14, sheets 1 through 9. Discussed in the paragraphs below are the AC and DC power distribution for the RDADP cabinet.

5-12.3.2.1 RDADP Cabinet UD5 AC Power Distribution. The following AC outputs from the equipment shelter power distribution panel(s) are received at the RDADP cabinet:

- 3ϕ power via UD1FL1/101 (sheet 1, zone 11B; sheet 2, zone 11B)
- 2ϕ power (B and C) via UD1FL3/103 (sheet 1, zone 1B; sheet 2, zone 1B)
- 3ϕ power via UD1FL2 (sheet 3, zone 3A)

The RDADP cabinet blowers B1 through B4 are powered by 120 Vac received from the secondary power distribution panel in the equipment shelter. The blowers provide for cabinet cooling. This power is supplied via UD1FL1 and RDADP TB1-3. Phase A power via TB1-4 is sent to the maintenance panel (Figure FO7-14, sheet 1, zone 9A or sheet 2, zone 10A for redundant sites) which connects the 120 Vac to the pedestal control unit (zone 8A) and power supplies PS1, PS2, and PS3. For redundant sites, power is not supplied directly to PS3, but is instead applied to the coil of

relay K1 (sheet 2, zone 8B). The relay energizes and its A2-A1 contacts close to provide 120 Vac to PS3. The purpose of relay K1 is to shutdown the +5 Vdc output voltage of PS3 very quickly when 120 Vac input power is shut off. When 120 Vac is shut off, relay K1 deenergizes, and its B2-B3 contacts close, connecting the +5 Vdc output of PS3 to ground through bleed-off resistor R1. Phase B and C power from TB1-6 and TB1-8 connects 120 Vac to Power Distribution Panel A14 (sheet 1, zone 9A or sheet 2, zone 9A for redundant systems). Power from the A14 Power Distribution Panel supplies 120 Vac to Swing-out Power Supply Subsystem PS5 (sheet 4, zone 11B) and also to the following RDADP equipment:

- SCSI Fan Assembly (sheet 9, zone 3B)
- Maintenance Terminal (sheet 9, zone 3A)
- Channel Service Unit (sheet 9, zone 3A)
- SCSI Power Supplies PS5/12 Vdc (sheet 9, zone 3B)
- VME Chassis (sheet 9, zone 3A)
- Archive II (sheet 9, zone 3A)

In FAA redundant systems, the maintenance terminal, VME chassis, and SCSI assembly are also powered in this manner. In NWS redundant systems, Relay Assembly UD5A24 (Figure FO7-14, sheet 7, zones 2A and 3A) supplies the 120 Vac to SCSI Assembly UD5A5, SCSI Fan Assembly UD5A8, VME Chassis UD5A1, Fan Assemblies UD5B1 through B4, and Relay Assembly UD5A24. Relays UD5A24K1 and UD5A24K2 (zone 2A) provide remote power shutdown capabilities, which are discussed in detail in paragraph 5-12.4. The power distribution panel also connects 120 Vac to CSU UD5A18 (sheet 8, zone 2B) and to Outlet Strip UD5J30, which distributes it to the Wideband Communication Switch UD5A19, RDA Maintenance Terminal, Standalone Dial Port Modem UD5A21, and STATMUX UD5A20.

Phases B and C AC power is input to the RDADP cabinet via UD1FL3 (Figure FO7-14, sheet 1, zone 1B and sheet 2, zone 1B for redundant sites). Phases B and C is sent to UD5PS4 (zone 2B) and Phase C is sent to the Signal Processor Blower Assembly UD5A11 (zone 2B). Phases A, B, and C power is supplied via UD1FL2 (sheet 3, zone 4A) to the Pedestal Power Amplifier A7 (zone 5A). The pedestal power amplifier then sends 115 Vac to the antenna/pedestal assembly (zone 4B). Line Voltage Monitor UD10A1A4 (EHB 6-550, Figure FO4-11, sheet 2, zone 3B) in the auto-transfer switch monitors AC power sent to the DAU digital processor (Figure FO7-14, sheet 1, zone 5B).

5-12.3.2.1.1 Swing-Out Power Subsystem UD5PS5. The swing-out power subsystem (Figure FO7-14, sheet 4, zone 10B) is a rear-mounted, swing-out assembly that includes an AC power module, a DC power supply, a CDS master module, and a fan assembly, all of which reside in a sheet metal enclosure, and are replaceable (Table 5-29). An upper temperature sense module, which provides inputs to the power subsystem, is located in M3200 Processor Chassis UD5A12.

Table 5-29. Power Subsystem Replaceable Components

| Replaceable Component | Reference Designation |
|---|---|
| Enclosure/Backpanel | UD5PS5 |
| AC Power Module | UD5PS5A1 |
| DC Power Supply | UD5PS5A2 |
| CDS Master Module | UD5PS5A3 |
| Power Supply Fan Tray | UD5PS5A4 |
| Upper Temperature Sense Module | UD5A12A3 |

The following paragraphs discuss each component of the power subsystem.

5-12.3.2.1.1.1 AC Power Module UD5PS5A1. The AC power module (Figure FO7-14, sheet 4) receives 208 Vac, 12 amp power from power distribution panel. The AC power module (Figure 5-29) contains several circuit breakers that regulate this input voltage to generate various AC voltages that are supplied to other units. The main breaker to the power subsystem is 20-amp circuit breaker CB1-CB2-CB3. The AC power is applied to line filter circuitry before being output to DC Power Supply UD5PS5A2 via connector 5. Filtered AC voltage is also regulated by circuit breakers CB4 and CB5 before being applied to Transformer T1. This transformer steps down the AC voltage to supply 24 Vac to the swing-out power subsystem's backpanel via plug P2. This 24 Vac is supplied to CDS Master Module UD5PS5A3 (Figure FO7-14, sheet 4, 9B) and CDS Patch Panel UD5A15. Circuit Breakers CB6 and CB7 regulate filtered AC voltage and supply it to the lower fan assembly via jack J7.

The AC power module also contains a 12 Vdc battery that provides backup power for the RDASC processor's composite memory module (CMM) during a brief AC power outage. The battery is a maintenance-free, sealed 12-Vdc lead-acid battery connected to circuit breaker CB3. The circuit breaker protects against an output short circuit. The battery supplies 12 Vdc of backup power to the DC power supply. This power enables the DC power supply to provide 5 Vdc to the CMM for 30 minutes. During normal system operation, the DC power supply passes a charging current to the battery through the BP12 signal to allow it to recharge. The battery recharge rate from depletion is approximately 24 hours.

5-12.3.2.1.1.2 DC Power Supply UD5PS5A2. DC Power Supply (Figure FO7-14, sheet 4, 9B) receives its input power from the AC module. It provides 5 Vdc power to the M3200 Processor Chassis UD5A12 via the power subsystem's backpanel and the P5 bus. It supplies 5 Vdc backup power to the CMM via the P5U bus. It also supplies non-interruptible power to the slave power controller (SPC) and sense circuitry, which are located within the DC power supply itself. The destinations of the DC power supply's outputs are listed in Table 5-30.

The SPC monitors failure signals sent through the backpanel from fan and temperature sense circuitry. When a failure is detected, the SPC shuts down the power supply and notifies the CDS master module. Fault detection is discussed in paragraph 5-12.3.2.1.1.7 .

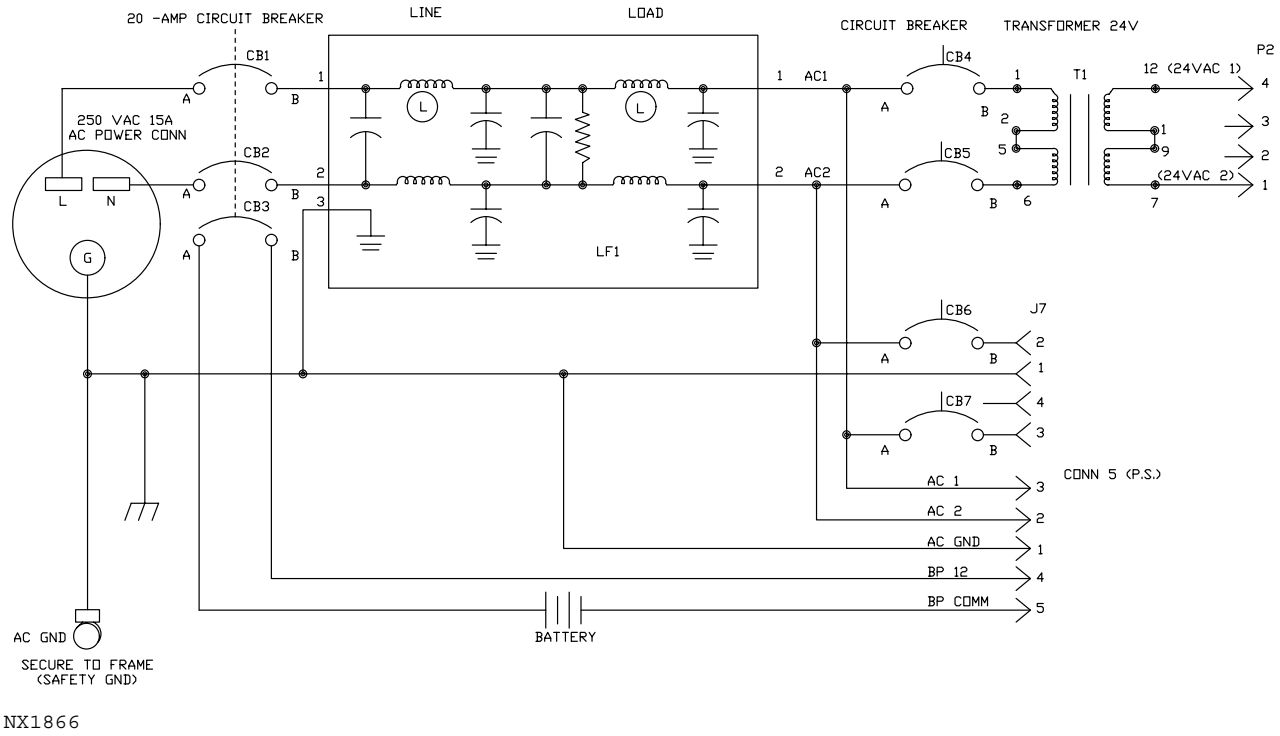


Figure 5-29. AC Power Module Block Diagram

Table 5-30. DC Power Supply Output Destinations

| Output | Nominal Power Source | Nominal Output | Function |
|---|---|---|---|
| P5 | + 5 Vdc | 193 A | Supplies power to the M3200 Processor Chassis |
| P5U | + 5 Vdc | 15 A | Supplies power to CMM |
| BP12 | +12 Vdc | 0.2 A | For AC module battery charger |
| FP12 | +12 Vdc | 1 A | Supplies power to subsystem fans |
| SP5U | + 5 Vdc | 0.5 A | Non-interruptible DC power for slave power controller used to control DC power supply |
| SP12U | +12 Vdc | 0.3 A | Non-interruptible DC power used to detect fan rotation and control DC power supply |
| SN12U | -12 Vdc | 0.015 A | Non-interruptible DC power used to detect fan rotation and control DC power supply |

5-12.3.2.1.1.3 Power Subsystem Enclosure and Backpanel Assembly UD5PS5. The power subsystem enclosure and backpanel are considered one replaceable unit. Together they provide housing and cable connections for the other components of the power subsystem.

5-12.3.2.1.1.4 Power Supply Fan Tray UD5PS5A4. The power supply fan tray contains two 12 Vdc fans supplying approximately 200 cfm total positive air flow for power supply cooling. Each fan includes sensing circuitry for monitoring fan rotation.

5-12.3.2.1.1.5 CDS Master Module UD5PS5A3. The control diagnostic system (CDS) is a microprocessor-based, control network used to configure, control, and monitor the system. The CDS master module, which is the controlling module in the CDS, is a circuit board with a front panel that connects directly to the power subsystem backpanel.

5-12.3.2.1.1.6 Upper Temperature Sense Module UD5A12A3. The upper temperature sense module senses the exhaust air temperature of the M3200 Processor Chassis UD5A12.

5-12.3.2.1.1.7 Fault Detection. The power subsystem contains a fault detection system that monitors fan rotation and the temperature of incoming and outgoing air circulating through the M3200 system. The fan rotation sensing circuitry is part of four AC fans in AC Fan Tray UD5A13 and the two DC fans in Power Supply Fan Tray UD5PS5A4. The temperature sensing system consists of sensing circuitry on the lower AC fan assembly, which monitors the incoming air temperature, and the Upper Temperature Sense Module UD5A12A3 which monitors the outgoing air temperature.

The rotation and temperature sensing circuitry send signals to the subsystem backpanel, where they are analyzed and then monitored by the slave power controller (SPC), located in the swing-out power supply subsystem DC power supply. The SPC shuts down the DC power supply and notifies the CDS master module under the following conditions:

- When either AC fan 3 or 4 (located under the processor section of the M3200 processor chassis) fails.
- When both AC fans 5 and 6 (located under the I/O section of the M3200 processor chassis) fail. (If only one of these fans fail, a failure message is displayed, but the system does not shutdown.)
- When either of the two DC fans (located under the power subsystem) fails.
- The incoming air temperature, measured at the lower AC fan assembly, reaches the upper temperature limit of 47.8°C (118°F).
- There is a 20°C (68°F) temperature difference between the lower AC fan sensing circuitry and the upper temperature sense module.

5-12.3.2.1.1.8 Circuit Protection. The subsystem's AC module (UD5PS5A1 (Figure 5-29), contains the main 20-amp circuit breaker, CB1 through CB3, for the power subsystem, as well as four 2-amp circuit breakers, CB4 through CB7. Circuit breakers CB6 and CB7 provide surge protection for the AC fan assembly and CB4 and CB5 for the CDS master module.

5-12.3.2.2 RDADP Cabinet UD5 DC Power Distribution. The DC power is distributed in the RDADP cabinet as follows:

- UD5PS1 (sheets 1 and 2, zone 7B) supplies +28 Vdc to the DAU
- UD5PS2 (sheets 1 and 2, zone 7B) supplies +/-15 Vdc to the DAU
- UD5PS3 (sheets 1 and 2, zone 7A) supplies +5 Vdc to the DAU
- UD5PS4 (sheets 1 and 2, zone 2B) supplies +5 Vdc to PSP and HSP
- UD5PS5 (sheets 4, zone 10B, and 5, zone 9B) supplies +5 Vdc to the RDASC Processor

The pedestal control unit supplies voltage samples (Figure FO7-14, sheet 3, zone 5B) to the DAU for monitoring.

5-12.4 NWS REDUNDANT CONFIGURATION REMOTE POWER SHUTDOWN.

NWS redundant systems have the capability of shutting off power to the RDA channel not in use from the remote RDA maintenance console. This is referred to as NWS full-off capability. Figure FO7-15 depicts remote power shutdown for channel 2 RDA, UD5. Nearly identical circuitry exists in channel 1 RDA, UD105.

For an NWS redundant system, the P5U bus bar and the ground bus bar are connected to the coil of relay K1 in Relay Assembly UD5A24 (Figure FO7-15, zone 6A). When the power off command is issued from the remote RDA maintenance terminal, 5 Vdc power is shut off to the P5U bus bar. This shuts off the RDASC processor and deenergizes the coil of Relay UD5A24K1. Normally open contacts of K1 open, interrupting 120 Vac phase A power to the coil of Relay UD5A24K2, deenergizing the relay. Its normally open contacts open, shutting off 120 Vac phase A and B power supplied through Relay Assembly UD5A24, via Terminal Board UD5A24TB1 (zone 4B). This shuts off power output to AC Fan Tray UD5A13 and to Outlet Strip UD5J31. Power is shut off to all assemblies connected to the outlet strip, including VME Chassis UD5A1, Cabinet Fans UD5B1 through B4, SCSI UD5A5, SCSI Fan Assembly UD5A8, and Power Supply UD5PS1 through Maintenance Panel UD5A2.

This does not interrupt three-phase AC power to the RDA cabinet. Secondary Power Distribution Panel #3 UD7A30 circuit breakers 2, 4, and 6 (zone 9A) supply three-phase power to Pedestal Power Amplifier UD5A7 via Filter UD1FL2. Circuit breaker 8 provides one leg of AC power to Waveguide Pressurization Unit #2 UD6 via Power Filter UD1FL5. Circuit breakers 15, 17, and 19 continue to supply three-phase AC power to Terminal Board UD5TB1 (zone 7A), which supplies AC power to Pedestal Control Unit UD5A6 via Maintenance Panel UD5A2. Additionally, three-phase AC power continues to be applied through the Main Power Distribution Panel UD7A2 and Secondary Power Distribution Panel #2 UD7A29 to Transmitter UD3, Receiver UD4, and the UD5 Signal Processor power supply and blower assembly (zone 1B).

At NWS redundant sites with a TPMS or stand-alone TPS unit, three-phase AC power from the Output Fused Disconnect UD61A5S3 is supplied to the Critical Equipment Contactor - Distribution Panel (CEC-DP) UD7TPS2 circuit breakers CB1 through CB4. The CEC-DP power panel then distributes the three-phase AC power from the circuit breaker to the contactor, then to the appropriate secondary power distribution panel as described below (Refer to NWS EHB 6-553, Figure FO1-6):

- UD7TPS2CB1 to Contactor UD7S6 to Secondary PDP#1 UD7A3
- UD7TPS2CB2 to Contactor UD7S36 to Secondary PDP#2 UD7A29
- UD7TPS2CB3 to Contactor UD7S37 to Secondary PDP#3 UD7A30
- UD7TPS2CB4 C-phase AC power through normally closed contacts of Fire Control Panel UD5A5 relay K5 to the coil of Contactor #3 UD7S37

The secondary PDP #1 and #2, UD7A3 and UD7A29, then distribute power to the transmitter, receiver, and signal processor power supply and blower as described above.

# Section 5-13. Redundant Switching

## 5-13.1 INTRODUCTION.

**NOTE**

This section refers to the RDADP as UD5, the Receiver as UD4, the Transmitter as UD3, and the Waveguide Pressurization Unit as UD6. Unless otherwise specified, the information also applies to redundant systems UD105, UD104, UD103, and UD106.

Redundant systems consist of two channels (Channel 1 and Channel 2) and only one channel can be the controlling channel. The operator determines which channel is to be the controlling channel via software. Once the controlling channel command has been initiated, the systems go through a series of relay switching to provide a path from the controlling channel to all its corresponding equipment. The type of switchings involved are described in the following paragraphs.

## 5-13.2 ANTENNA CONTROL.

When the Radome Hatch Switch UD11S2 switch #1 (Figure FO5-32, sheet 2, zone 7B) closes it provides +28 Vdc to contact A2 of Relay UD5A3K3. The coil of relay K3 is energized by the peripheral driver output signal ANT CMD RY 2. When the coil of K3 is energized, contacts A1 and A2 close to provide +28 Vdc to the coil of Waveguide Switches UD1S1 and UD1S2. This holds true as long as the Radome Hatch Switch UD11S2 switch #1 remains closed.

The coils of Waveguide Switches UD1S1 and UD1S2 (Figure FO5-32, sheet 4) energize causing the contacts of both switches to close, providing a path for +28 Vdc to the transmitter via ANT POS IND 2 signal.

The DAU Analog Processor UD5A3A2 peripheral driver outputs signal RDASC1/2 (N) (Figure FO5-32, sheet 2, zone 8A) to the coil of relay K5, energizing its coil. The energized coil of K5 causes its contacts B1 and B2 to close providing a path for CHAN 2 CNTRL signal to be sent to the pedestal. Contacts A1 and A2 close sending the signal PANT CMD2 from the peripheral driver to the Controller Module UD5A3A1. A return PCH2CMD is sent to the coil of relay K4. The energized coil causes contacts 1 and 6 to close connecting the RDASC1/RDASC2 RTN signal to the RDASC1/RDASC2 signal which tells the pedestal control unit to activate Channel 2.

When the Radome Hatch Switch UD11S102 switch #1 (Figure FO5-32, sheet 1) closes it provides +28 Vdc to contact A2 of relay K3. The coil of relay K3 is energized by the peripheral driver output signal ANT CMD RY 1. When the coil of K3 is energized, contacts A1 and A2 close to provide +28 Vdc to the coil of Waveguide Switch UD1S101. This holds true as long as the Radome Hatch Switch UD1S102 remains closed.

The coil of Waveguide Switch UD1S101 (Figure FO5-32, sheet 4) energizes causing the contacts to close, providing a path for +28 Vdc to the transmitter via ANT POS IND 1 signal.

If Channel 2 is not the controlling channel, its peripheral driver in the DAU Analog Processor UD5A3A2 outputs signal RDASC1/RDASC2 (N) (Figure FO5-32, sheet 1) to the coil of relay

UD105A3K5, energizing its coil. The energized coil of K5 causes its contacts B2 and B3 to close providing a path for CHAN 1 CNTRL signal to be sent to the pedestal. Contacts A2 and A3 also close sending the signal PANT CMD1 from the peripheral driver to the DAU Controller Module UD5A3A1.

### 5-13.3 WAVEGUIDE INTERLOCK SWITCH.

The waveguide switches (Figure FO5-32, sheet 4) receive signals from the respective DAUs. The waveguide switch to be energized is dependent on which channel is the controlling channel.

The contacts of energized Waveguide Switch UD1S1 close applying +28 Vdc to energized Waveguide Switch UD1S2 which in turn passes the +28 Vdc to the transmitter via the ANT POS IND 2 signal. This signal informs the transmitter that the waveguide switch is positioned to radiate through the antenna. Whether the Waveguide Switch UD1S1 or UD1S2 is energized or deenergized its contacts provide +28 Vdc to the Transmitter UD3 via WAVEGUIDE SWITCH TRANSMITTER INTERLOCK signal.

When the coil of Waveguide Switch UD1S101 in Channel 1 is energized, its contacts close applying +28 Vdc to the coil of relay UD5A3K8 via DAU UD105A3 and to the Transmitter UD103 via the ANT POS IND 1 signal which informs the transmitter that the switch is positioned to radiate through the antenna. The energized coil of UD5A3K8 closes the contacts which provides a path for the +28 Vdc from the other channels Waveguide Switch UD1S1 to the Transmitter UD103 via WAVEGUIDE SWITCH TRANSMITTER INTERLOCK signal.

### 5-13.4 PEDESTAL CONTROL.

In redundant systems, the pedestal electronics (Figure FO5-32, sheet 5) are located in the Channel 2 (UD5) cabinet. Relay logic in each channels respective DAU is used to assign control of the pedestal to the on-line channel. All channel switching functions in the DAU are operator-initiated.

When Channel 1 is the controlling channel and the Radome Hatch Switch UD11S102 closes, it provides a path for +28 Vdc via RADOME HATCH SWITCH #1 RTN to the coil of relay UD105A3K2. The contacts in relay K2 close, linking the STANDBY/$\overline{\text{OPERATE}}$ RTN signal to the STANDBY/$\overline{\text{OPERATE}}$ signal. When Channel 1 issues the pedestal operate command, the RDASC generates a return on RELAY DR4 signal to energize the coil of relay UD105A2U31. The contacts of relay U31 close, sending the signal to relay UD5A3K4. Contacts 2 and 4 on relay K4 close to complete the connection between STANDBY/$\overline{\text{OPERATE}}$ RTN and STANDBY/$\overline{\text{OPERATE}}$, causing the pedestal to operate.

When Channel 2 is the controlling channel and the Radome Hatch Switch UD11S2 closes, it provides a path for +28 Vdc via RADOME HATCH SWITCH #1 RTN to the coil of relay UD5A3K2. The contacts in K2 close, closing part of the connection between STANDBY/$\overline{\text{OPERATE}}$ RTN and STANDBY/$\overline{\text{OPERATE}}$. When Channel 2 issues the pedestal operate command, the RDASC generates a return on RELAY DR4 signal, which energizes the coil of relay UD5A3U31. The contacts of relay U31 close, closing the second part of the connection between STANDBY/$\overline{\text{OPERATE}}$ RTN and STANDBY/$\overline{\text{OPERATE}}$.

Channel 2 commands control via the PCH2 CMD which is passed to the coil of relay UD5A3K4 via drivers U52 and U26 in the DAU. The PCH2 CMD signal provides +28 Vdc to energize the coil of

relay K4. Contacts 2 and 5 of relay K4 close to complete the connection between STANDBY/$\overline{\text{OPERATE}}$ RTN and STANDBY/$\overline{\text{OPERATE}}$ and causes the pedestal to operate. In addition, contacts 1 and 6 close to connect RDASC1/$\overline{\text{RDASC2}}$ RTN to RDASC1/$\overline{\text{RDASC2}}$ which tells the pedestal control unit to activate Channel 2.

5-13.5 AC POWER SWITCHING.

Three-phase power (Figure FO5-32, sheet 6) is supplied to the automatic transfer switch either as utility power or generator power. The automatic transfer switch's logic circuitry determines which AC power source supplies power for distribution to the RDA site equipment.

When Channel 1 is the controlling channel, the RDASC generates either a RELAY DR2 or a RELAY DR3 signal. If the RELAY DR2 signal is generated, it energizes the coil of relay U29 and the contacts close causing a switchover to generator power. If the RELAY DR3 signal is generated, it energizes the coil of relay U30 and the contacts close causing a switchover to utility power. Either the SW TO UTIL or SW TO GEN signal is sent to the automatic transfer switch via a deenergized K6 relay.

When Channel 2 is the controlling channel, the RDASC generates either a RELAY DR2 or RELAY DR3 signal. If the RELAY DR2 signal is generated, it energizes the coil of relay U29 and the contacts close causing a switchover to generator power. If the RELAY DR3 signal is generated, it energizes the coil of relay U30 and the contacts close causing a switchover to utility power. The DAU Analog Board UD5A3A2 provides a +28 Vdc to the coil of relay K6. When the coil of K6 is energized, the contacts close making Channel 2 the source for the SW TO GEN and SW TO UTIL signals. Either the SW TO UTIL or SW TO GEN signal is sent to the automatic transfer switch via an energized K6 relay.

5-13.6 PEDESTAL VOLTAGE.

When Channel 1 is the controlling channel (Figure FO5-32, sheet 7), relay K7 in Channel 2's DAU is not energized, providing a path for voltage samples +5, +15, -15, and +28 Vdc to Channel 1's DAU Analog Processor Board UD105A3A2. The voltage samples are scaled and converted into an 8-bit binary number which is then sent to the DAU Controller UD105A3A1 as an 8-bit parallel bus called A/D DATA, where the voltage samples are passed along through other circuitry in the DAU to the Pedestal Digital Control Unit UD5A6.

When Channel 2 is the controlling channel, a return of +28 Vdc is provided to the coil of K7 via the DAU Analog Processor Board UD5A3A2. The coil is energized causing the contacts to close sending the voltage samples +5, +15, -15, and +28 Vdc to the Analog Processor Board UD5A3A2. The voltage samples are scaled and converted into an 8-bit binary number which is then sent to the DAU Controller UD5A3A1 as an 8-bit parallel bus called A/D DATA, where the voltage samples are passed along through other circuitry in the DAU to the Pedestal Digital Control Unit UD5A6.

5-13.7 NWS WIDEBAND COMMUNICATIONS SWITCHING.

NWS redundant systems consist of two RDAs and one remotely located RPG. Only one RDA (the controlling channel) can communicate with the RPG via wideband communication interface (Figure FO5-32, sheet 8).

If Channel 1 is the controlling channel, its DAU sends a controlling signal to the coil of the Wideband Communication Switch UD5A19. The signal energizes the coil causing its contacts to switch to the A position creating a path between the Channel 1 RDA via Wideband Communication Card UD105A1A2 and the RPG. The wideband board in the RDA communicates with the wideband board in the RPG via the CSU.

If Channel 2 is the controlling channel, its DAU sends a controlling signal to the coil of the Wideband Communication Switch UD5A19. The signal deenergizes the coil causing its contacts to switch to the B position creating a path between the Channel 2 RDA via Wideband Communication Card UD5A1A2 and the RPG. The wideband board in the RDA communicates with the wideband board in the RPG via the CSU UD5A18.

# Section 5-14. Control RDA Program Function, Functional Description

## 5-14.1 INTRODUCTION.

The Control RDA Program function performs required processing in response to control commands either entered at the RDA maintenance terminal or received from the RPG. It also provides overall sequence control of the volume coverage by initiation of the control SP and pedestal program functions at appropriate times based on the selected volume coverage pattern. Table 5-31 contains a listing of the commands associated with this function.

## 5-14.2 RDA STATES.

The RDA states consist of combinations of control states and operating states. Control states include Local, Remote, Either, RMS, and MMI; and operating states include Standby, Restart, Startup, Playback, Off-line Operate, and Operate. Control states define the commands which can be accepted from the RDA maintenance terminal, RPG, or RMS while operating states define the processing which is performed by the RDASC in response to commands. Transitions between the various operating states and control states can take place due to commands from the RDA, RPG, RMS, or automatically when specified conditions occur. If any of the RDA control functions performed in the initialization or control sequences defined below are not completed within a time interval based on the design implementation, but not to exceed 45 seconds, either alarm INIT SEQ TIMEOUT - RESTART INITIATED or CONTROL SEQ TIMEOUT - RESTART INITIATED is set and the RDA application software re-boots. The allowable states and state transitions along with the commands which induce those transitions are shown in Table 5-32. Special rules apply for transitions associated with a Restart due to “power recovery” and are not shown here. Also not shown are automatic transitions from Startup or Restart states or transitions due to error conditions. Commands that are to be accepted from the RDA maintenance terminal or the RPG in each control state are in accordance with Table 5-31. In the event an invalid command (e.g., unallowed command types or inappropriate commands as specified by Table 5-31) is received from the RPG, the alarm INVALID RPG COMMAND RECEIVED alarm is set. The following paragraphs provide a discussion of each state.

5-14.2.1 RDA Operate State. The RDA Operate state is defined as follows:

- RDA operating state is set to Operate.
- Channel 2 command has been set to the controlling position (mandatory only for Channel 2), High Voltage On, Pedestal Servo Power On, and Waveguide Switched to Antenna.
- Hardware monitoring function is operational.
- Volume coverage control function has been initiated. This program function provides for implementation of the selected volume coverage pattern and scheduling of RDA calibrations in an automatic fashion with no operator intervention required.
- The Form RDA Data and the Handle Wideband program functions have been initiated in order to transmit base data and status data to the RPG and receive RPG commands.

5-14.2.2 RDA Standby State. The RDA Standby state is defined as follows:

- RDA operating state has been set to Standby.
- Transmitter high voltage has been set to off, waveguide switched to dummy load.
- If this is the controlling channel, the pedestal has been commanded to the pedestal park position (adaptation data) via the Control Pedestal program function and pedestal servo power has been turned off after the park position has been reached. In the event standby is attained via the radome access hatch open, the alarm RADOME ACCESS HATCH OPEN is set, servo power is commanded off without commanding the pedestal to park, and the RDA state is set to INOPERATIVE.
- Channel 2 command has been set to the non-controlling position (mandatory only for Channel 2).
- The hardware monitoring and the calibration processing program functions are operational.
- The Form RDA Data and the Handle Wideband program functions are operational in order to transmit status data to the RPG and to receive RPG commands.

5-14.2.3 RDA Off-Line Operate State. The RDA Off-line Operate state is defined as follows.

- RDA operating state is set to Off-line Operate.
- If this is the controlling channel, the pedestal has been commanded to the pedestal park position (adaptation data) via the Control Pedestal program function and pedestal servo power has been turned off after the park position has been reached.
- Transmitter waveguide switch has been set to dummy load position, the Channel 2 Command cleared to the non-controlling position (mandatory only for Channel 2), and high voltage to transmitter turned on.
- The hardware monitoring and calibration processing program functions are operational.
- The Form RDA Data and the Handle Wideband program functions are operational in order to transmit status data to the RPG and receive RPG commands.

5-14.2.4 RDA Playback State. The RDA Playback state is defined as follows:

- RDA operating state is set to Playback.
- Transmitter high voltage is turned off, waveguide switched to dummy load.
- If this is the controlling channel, the pedestal has been commanded to the pedestal park position (adaptation data) via the Control Pedestal program function and pedestal servo power turned off after the park position has been reached.
- Channel 2 command has been cleared to the non-controlling position (mandatory only for Channel 2).

- The hardware monitoring and the calibration processing program functions are operational.
- The Form RDA Data and the Handle Wideband program functions are operating in order to transmit Archive II base data and status data to the RPG and receive RPG commands.

5-14.2.5 Calibration Processing. When in the Standby or Off-line Operate state, the calibration processing is scheduled periodically at intervals of 10 minutes or less. When in the Playback state, this processing is scheduled once per played back volume scan.

5-14.2.6 Local or Either Control. Standby and Off-line Operate are under Local or Either control. Operate and Playback are under Local or Remote control. Off-line Operate is disallowed if the RDA is operating under backup power. If the RDA State file indicates Off-line Operate upon return from a power outage (RDA under backup power), the RDA is transitioned to Standby.

5-14.2.7 Change Command. Valid Control State change commands from the RDA maintenance terminal are request local control (RELC) and enable remote control (ENRC). Valid State change commands from the RPG are enable local control (ENLC), accept remote control (ARC), and request remote control (RRC).

5-14.2.8 RDA Transition, Local to Either Control. When the RDA is in Standby or Off-line Operate, transition from Local control to Either control is via the RDASC issuing ENRC, and transition from Either control to Local control via the RDASC issuing RELC. When the RDA is in Operate, transition from Remote control to Local control via the RDA issuing RELC, and the RPG issuing ENLC and transition from Local control to Remote control the RDA issuing ENRC and the RPG issuing ARC. If a Request Remote Control command is received from the RPG while the RDA is in local control, the RDA maintenance terminal operator is notified via an appropriate display message unless the operator has already issued ENRC.

5-14.2.9 RDA Transition, Either to Operate Local Control. When the RDA is in Standby and under Either control, transition to Operate Local control is by the RDA operator issuing an Operate command. Transition from Standby Either to Operate Remote control is via the RPG issuing an Operate command, and transition back to Standby Either control via the RPG issuing a Standby command.

5-14.2.10 RDA Transition, Either to Operate Off-line Control When the RDA is Off-line Operate and under Either control, transition to Operate Local control is by the RDA operator issuing an Operate command. Transition from Off-line Operate Either to Operate Remote Control is via the RPG issuing an Operate command, and transition back to Off-line Either control via the RPG issuing a Off-line Operate Command.

5-14.2.11 RDA Transition from Either to Playback Local. When the RDA is in Off-line Operate or Standby and under Either control, transition to Playback Local is via the RDA issuing a Playback command. Transition from Standby Either or Off-line Operate Either to Playback Remote is via the RPG issuing a Playback command, and transition back to Standby Either or Off-line Operate Either is via the RPG issuing a Standby or Off-line Operate command, respectively. When the RDA is under Remote Control, transition between Operate and Playback is via the RPG issuing either an

Operate or Playback command, respectively. When the RDA is in Playback, transition from Remote control to Local control is via the RPG issuing RELC and the RDA issuing RELC, and transition from Local control to Remote control is via the RDA issuing ENRC and the RPG issuing ARC. When all specified archived base data on the archive medium has been played back through the system in its entirety, the RDA is automatically transitioned to standby. The aforementioned transitions to Playback are executed provided that the Archive II device is installed and loaded with an archive medium containing previously stored base data and that the playback state is enabled via adaptation data.

5-14.2.12 RDA Transition between Off-line, Standby, Playback, and Operate. When RDA is under Local control, transition between Off-line Operate, Standby, Playback, and Operate is via the RDASC issuing an Off-line Operate, Standby, Playback, or Operate command, respectively. When under Either control, transition between Off-line Operate and Standby is via the RDASC or the RPG issuing an Off-line Operate or Standby command, respectively.

5-14.2.13 Radar Data Output Buffer Overflow. In the event the radar data output buffer overflows due to loss of RPG wideband communication while in the Remote Operate state, the RDASC discontinues the scan and reverts to Standby Either provided that data transmission is not enabled with the Wideband User and Archive II recording is not active. Under these circumstances, if data transmission is enabled with the Wideband User or Archive II recording is active, the RDASC enters the Local Operate State with Remote control enabled. If the RDA Operability Status becomes Inoperable, the RDA transitions to Standby if in Operate, independent of whether in Remote or Local control and STANDBY FORCED BY INOP ALARM is set. If one of the alarms MULT/DAU I/O ERROR-RDA FORCED TO STBY, MULT SPS I/O ERROR-RDA FORCED TO STBY, or MULT PED I/O ERROR-RDA FORCED TO STBY is set, the RDA transitions to Standby if in Operate independent of whether in Remote or Local control.

5-14.2.14 RDASC. The command state of the RDA is stored in the RDASC to permit restoration of the previous state following power loss and recovery or RPG commanded restart. If the pedestal does not reach the pedestal parked position (adaptation data) within 30 seconds following issuance of a pedestal park command, PEDESTAL UNABLE TO PARK is set unless the other channel becomes the controlling channel during this interval. If PEDESTAL UNABLE TO PARK is set and the channel has control, the program attempts to park the pedestal approximately every 60 seconds. If three consecutive attempts fail in standby state, the program stops trying to park the pedestal to avoid overloading the drive motors. The PEDESTAL DYNAMIC FAULT alarm is not cleared until subsequent command to operate and attainment of angle rate match within time limit.

5-14.2.15 RDA Operating Modes. The RDA operating modes include Maintenance and Operational and are selectable from either the RDA or the RPG. The RDA initiates execution of a maintenance volume coverage pattern only when it is in the Maintenance mode. In the event a Select Operational Mode command is received while the RDASC is executing a maintenance volume coverage pattern, the command is rejected as invalid.

5-14.2.16 Specific Requirements. Specific requirements associated with RDA Cold Startup, Warm Startup, Restart, Power Control, Transmitter Control, Dual Channel Configuration, and Data Transmission are provided in paragraphs 5-14.2.17 through 5-14.2.22 respectively.

5-14.2.17 Cold Startup. Cold Startup is initiated only by the maintenance operator. The initial steps are manual. At the completion of these steps, the RDA maintenance terminal is operating,

transmitter heater warmup is initiated, the antenna/pedestal, signal processor, and receiver are powered up. The pedestal and radar hatch interlocks must also be closed for the sequence to be completed. The following program operations (steps) are then executed:

1. Set Power Restore Trap enabling power recovery processing.
2. Load Task Load file from disk identifying names of other subtask to load.
3. Load Logical Unit Assignment file from disk identifying logical unit assignments for Control RDA.
4. Load the RDA State file from disk to determine Startup Mode and which adaptation file to load.
5. Load the "current" or "baseline" adaptation data from disk, depending on Adaptation Data Load Flag in the RDA State file.
6. Load RDASC and RDASOT Calibration Data, Bypass Map, Remote VCP, and Clutter Censor Zone Data files.
7. Load each software task identified in the Task Load file.
8. Initialize software tasks and set RDA operating state as determined by the RDA State file.
9. Perform Startup processing for the following functions in parallel in order to initialize and monitor RDA equipment:
    a. Handle maintenance console (DAU, maintenance terminal)
    b. Control Signal Processor (SPS)
    c. Handle Wideband (Wideband Links)
10. When the DAU is initialized, monitor the receiver waveguide switch status to determine if this is the controlling or non-controlling channel. If the receiver is connected to the antenna, this is the controlling channel.
11. Perform the startup processing of the control pedestal function, if channel is "controlling".
12. Command the pedestal to the pedestal park position (contained in adaptation data) via the control pedestal function, if channel is "controlling".
13. Perform all the calibration functions except for the reflectivity calibration check and the clutter suppression check.
14. If all interlocks are closed, fully energize the transmitter and perform the reflectivity calibration check and the clutter suppression check.

5-14.2.17.1 File Loading Failure. If loading of either the Task Load file or the Logical Unit Assign file fails, and error message is sent to the maintenance terminal (system console mode) and

the Cold Startup is aborted. If loading of the RDA State file fails, the Backup RDA State file is loaded. If loading of the Backup RDA State file fails, the default state is entered. The default state includes Operational RDA mode, Local Control, Standby State, all moments Enabled, Remote Control Disabled, VCP21, Auto Calibration Enabled, ISU Enabled if installed, Radiation Inhibited Override, and Archive II Recording Disabled. If loading of the "current" adaptation data is specified and loading of this file fails, the "baseline" adaptation data file is loaded, and alarm MOD ADAP DATA FILE READ FAILED is set upon completion of the Cold Startup sequence. If loading of the "baseline" adaptation data fails, an error message is sent to the system console, and the Cold Startup is aborted. If loading is of the RDASOT Calibration data, Bypass Map, or Clutter Censor Zone data files fails, alarms RDASOT CAL DATA FILE READ FAILED, BYPASS MAP FILE READ FAILED, or CENSOR ZONE FILE READ FAILED respectively, are set upon completion of the Cold Startup sequence. If reading the RDASC Calibration data file fails, the data is regenerated. If reading of the RDASOT Calibration data file fails, pedestal position corrections are set to zero. If reading of the Bypass Map fails, the default map in the program is used (force filtering to 50 km). If reading of the Clutter Censor Zone data file fails, the censor zone data is set to zero. If loading of any of the software tasks fails, an error message is sent to the system console, and the Cold Startup is aborted. If a task cannot be started, the start is retried up to three additional times. If, after three retries, the task is still not started, an error message is sent to the system console, and the Cold Startup is aborted.

5-14.2.17.2 RDA Control/Operating State. At the completion of these 14 operations, the RDA alarm enters the COMMANDED control/operating state, any uncleared edge detected alarms are reported, and the state file (and its backup) are stored on disk. If storage of the state file fails, the STATE FILE WRITE FAILED is set. The commanded state is determined from the RDA State file or by RDA operator commands if input during the Cold Startup sequence. If the program is being run for the first time and the RDA State file has not been initialized or if the RDA was previously terminated by a Terminate Program or Local Restart command, and no RDA State has been commanded by the RDA operator, the commanded control/operating state is as specified by the default state (as defined above). If the state file specifies the control state is remote, the RDA sets the control state to local and sends the enable remote control (ENRC) command to the RPG. If the operator commands the system to Operate, the RDA enters this state if the other channel is not in Operate. If this condition is not met, the RDA returns to the state at the time of command receipt.

5-14.2.17.3 State File. If the state file specifies Operate, the RDA enters this state if the other channel is not in Operate. If this condition is not met, the RDA transitions to the Standby state.

5-14.2.17.4 RDA Application Software. During the RDA Cold Startup, the RDA application software reaches its commanded state within 3 minutes from beginning of operating system load of this program unless delayed for completion of transmitter preheat. If during the initialization or reinitialization process any initialization step does not complete within a reasonable time interval (based on the design implementation but not to exceed 45 seconds), the INIT SEQ TIMEOUT-REST ART INITIATED alarm is set. A mechanism is provided to periodically monitor the status of the RDA Control Task to prevent system hangups. If an error is detected in initializing this status monitor mechanism the alarm SYSTEM STATUS MONITOR INIT ERROR is set. When entering Operate following Startup, if the enable remote control (ENRC) command is issued from the maintenance terminal, the RDA enters the Control State of Remote upon receipt of the accept

remote control (ARC) command from the RPG. Otherwise, the RDA enters the Control State of Local.

5-14.2.18 Warm Startup. When an Operate command is issued from the Standby, Playback, or Off-line Operate state, a Warm Startup process is performed as follows, provided that the other RDA channel is not in the Operate State.

1. Set RDA Operating state to Startup
2. Set Channel 2 command to controlling position (mandatory only for Channel 2)
3. Check if channel has control as described for Cold Startup
4. If pedestal is not initialized, initialize pedestal
5. Perform step 13 of the Cold Startup sequence and transition to Operate state

Upon receipt of the Operate command from the RDA maintenance console when in Local or Either Control, the Control RDA function establishes Operate Local or, if commanded from the RPG when in Either control, establish Operate Remote. The program is designed to permit transition to Operate (i.e., collecting base data) within 10 seconds of the time that Operate command is received.

5-14.2.19 Restart. Restart encompasses different procedures, all of which bring the RDA into an operational state. The RDA is capable of performing a Full Restart when initiated by operator input from the maintenance terminal when under Local or Either Control or from the RPG when under Either or Remote Control, when a hardware or software condition causes the processor to reboot, or when one of the RDA software tasks pauses. If the task that paused is other than the Control RDA function, one of the following alarms is set:

- MMI TASK PAUSED-REST ART INITIATED
- DAU TASK PAUSED-REST ART INITIATED
- SPS TASK PAUSED-REST ART INITIATED
- PED TASK PAUSED-REST ART INITIATED
- ARCH II TASK PAUSED-REST ART INITIATED
- REDUN CHAN TSK PAUSED-RSTR T INITIATED
- WDOG TIMER TSK PAUSED-RSTR T INITIATED
- WIDBND TASK PAUSED-REST ART INITIATED

5-14.2.19.1 Full Restart. A Full Restart is also performed due to the setting of alarm MULT DAU CMD TOUTS-REST ART INITIATED, if alarm INIT SEQ TIMEOUT-RESTART INITIATED is set, or if alarm CONTROL SEQ TIMEOUT-RESTART INITIATED is set. Full Restart includes a program reload and uses the same control sequences as Cold Startup. Full Restart initiated via command from the RPG or via applicable alarm condition brings the RDA, if possible, to the state present at the time Restart was initiated. A Full Restart commanded by the RDA operator sends the

RDA to its default state. The Full Restart function utilizes the watchdog timer mechanism of the RDASC to initiate a program reload. Proper functioning of the watchdog timer requires the Disable/Enable/Auto switch on the computer front panel be set to the Auto position. The status of this switch is monitored periodically, and the DISABLE/ENABLE/AUTO SWITCH NOT IN AUTO alarm is set if the status indicates that the switch is set to the wrong position.

5-14.2.19.2 Fast Restart. The RDA initiates a Fast Restart automatically upon prime power recovery after a power loss occurring while the RDA is receiving power and not performing steps 1- 14. Fast Restarts include steps 8, 9, and 10. The Fast Restart bypasses most of the status and performance checks, including calibration, that are performed during the Full Restart. Provision is made in the program not to access the disk during a Full Restart until disk spin-up has completed. This includes skipping those steps that require disk access during the Restart sequence including maintenance terminal function loading of MMI screen files and SPS control function loading of download files. If possible, a power recovery Full Restart brings the equipment to the state present at the time of the power loss (i.e., operating under local control when under local control, or operating under remote control or standby depending on the RDA state at the time of the power loss) or the state commanded if in a transition state (i.e., Restart or Startup). When in Operate, the elevation cut in progress at the time of power loss is restarted if the power loss is less than or equal to 15 seconds. For greater length of power loss, the volume coverage pattern is restarted. If a power outage occurs during Playback, the volume scan in progress is restarted upon subsequent power turn-on.

Several alarms occur normally as a result of power failure recovery. These alarms do not impact the power failure recovery, and most of them clear automatically shortly after they are displayed. The only alarm messages that do not clear automatically are those known as occurrence alarms (paragraph 6-3.4.1 ). However, these alarms have no effect on the power failure recovery, and may be ignored. The alarm messages displayed during power failure recovery may include but are not necessarily limited to the following:

RPG LINK INITIALIZATION ERROR
SPS I/O STATUS ERROR
SPS INITIALIZATION ERROR
TRIGGER AMP FAILURE
TRANSMITTER RECYCLING

If an edge-detected alarm appears after power failure recovery and does not clear automatically, follow normal fault isolation procedures.

5-14.2.19.3 Power Outage Occurrence. If a power outage occurs prior to the completion of loading of the software tasks (i.e., disk access not complete) during the Cold Startup sequence the restart commences with “Load Task load/file from disk” and proceeds through the Cold Startup sequence accordingly. During this process, the RDA waits for disk spin-up to complete, causing a delay in the restart. If a power outage occurs prior to completion of hardware initialization but after initialization of the software tasks has completed (i.e., disk access complete) during the Cold Startup sequence, the restart commences with starting each software task and proceeds through the Cold Startup sequence accordingly. If a power outage occurs after a command to execute a Full Restart has been issued but prior to execution of the command, the RDA reboots upon subsequent power

turn on. During this process the RDASC waits for disk spin-up to complete in order to access the state file, causing a delay in the Restart. If a power outage occurs during the command program termination sequence, the program is terminated upon subsequent power turn-on.

5-14.2.19.4 Control RDA Function. Individual functions are reinitialized at a time interval not exceeding 2 seconds by the Control RDA function upon detection of one of the following alarms until the applicable interface is re-established.

| Alarm | Function |
|---|---|
| PEDESTAL INITIALIZATION ERROR | Control Pedestal |
| PEDESTAL I/O STATUS ERROR | |
| DAU STATUS READ TIMED OUT | Handle Maintenance (Console DAU Interface) |
| DAU INITIALIZATION ERROR | |
| DAU I/O STATUS ERROR | |
| SPS INITIALIZATION ERROR | Control Signal Processor |
| SPS I/O STATUS ERROR | |
| MMI INIT ERROR | Handle Maintenance Console (Terminal) |
| MMI I/O STATUS ERROR | |
| RPG LINK INIT ERROR | Handle Wideband (RPG Interface) |
| USER LINK INIT ERROR | Handle Wideband (Wideband User Interface) |
| SYSTEM STATUS MONITOR INIT ERROR | Control RDAs Status Monitor |

5-14.2.19.5 Radar Data Collection. If reinitialization occurs for the control pedestal function, control signal processor function, or handle maintenance console (DAU interface) function with the RDA in operate, radar data collection is interrupted until reinitialization is complete. The elevation cut in process at the time of reinitialization is restarted if the condition lasts less than or equal to 30 seconds, or the volume scan is restarted if the condition persists longer.

5-14.2.19.6 Fast Restart Control Sequence. The fast restart control sequence in response to power restoration is a function of the length of power outage. If a power loss is less than or equal to 15 seconds, the recovery response time is less than 15 seconds. If a power loss is greater than 15 seconds, the recovery response time is less than 40 seconds. However, for power outages of duration that cause transmitter reheat to exceed program recovery, the power recovery restart completion continues after transmitter reheat has completed.

5-14.2.20 Power Control. Power control commands initiate switchover between commercial and backup power for the RDA functional area.

5-14.2.20.1 Power Commands. Power commands are issued as a result of an operator action at either the RDA maintenance terminal or the RPG unit control position, and specify the primary power source for the RDA.

5-14.2.20.2 RDA Power Subsystem. The RDA power subsystem has provisions for automatic switchover in the event of power loss from the selected source. The power control function may select either power source; however, final arbitration and selection are performed in the power subsystem (e.g., selection of a non-invocable source is not honored).

5-14.2.20.3 Power Control Command. A power control command is validated. If command is for return to utility power, and the utility power source is unavailable, the command is rejected as invalid. Commands originating from the maintenance terminal are acknowledged, and an error message returned for all invalid power control commands. Power control commands for an RDA in the non-controlling channel are rejected as invalid.

5-14.2.20.4 Valid Commands. Valid commands forwarded to the RDA power subsystem (tower/utilities) via the maintenance terminal interface to effect the actual switchover.

5-14.2.20.5 Power Source Switchover. Power source switchover is not instantaneous; there is a momentary loss of power within the RDA functional area. The time of the switchover from one stable power source to another could span a period of hundreds of milliseconds. Therefore, the RDA is likely to cycle through power loss/power recovery.

5-14.2.20.6 Command Switchover. Prior to issuing a switchover command to the RDA power subsystem, the program notifies the RPG that power switchover is imminent by sending "Command Switchover" status as part of the RDA Summary Status Data. When switchover to backup power is commanded, switchover takes place automatically when the generator voltage and frequency has stabilized.

5-14.2.20.7 Operating Under Backup Power. When operating under backup power, the Evaluate Hardware Status subfunction of Monitor Hardware function generates console messages recommending return to the utility power source when it has stabilized. Actual return to the utility power source is made only: in response to an operator input, if fuel level drops below 5% capacity, in which case the utility power is automatically selected at the end of the current volume scan period if utility power is available, or if when the backup power is out of specification limits (generator voltage and frequency available not set) and utility power is available, switch to utility power at the end of the current volume scan. For those NWS and DoD sites with a Static TPS on-line and the automatic transfer switch (ATS) set to the auto-retransfer mode, the ATS controls when the transfer back to utility power will occur. With the ATS in auto-retransfer mode, all commanded inputs from the operator will be ignored. Conversely, if the Static TPS is off-line (either in TPS Bypass or Maintenance Bypass), then the transfer relay in the ATS (K7 for Kohler ATS or transfer relay in Onan ATS) will internally enable the manual transfer mode of the ATS. In this case, operator commanded inputs will be accepted by the ATS until the TPS is again placed on-line.

5-14.2.21 Transmitter Control. The transmitter high voltage is commanded by the RDASC processor. Actual charging of modulator pulse network does not take place until receipt of appropriate triggers from the synchronizer section of the signal processing subsystem. Control of transmitter pulsing is part of the volume coverage control subfunction and is exercised through control signal processing.

5-14.2.21.1 Antenna. If the antenna is stationary for a period of 30 seconds in Operate mode, alarm PEDESTAL STOPPED is set and radiation inhibited (i.e., waveguide switch set to dummy load and/or transmitter high voltage set to off).

5-14.2.21.2 Override Radiate Inhibit Command. When an Override Radiate Inhibit command is entered at the RDA maintenance terminal, radiation is permitted with the antenna stationary. This applies to any searchlight volume coverage pattern when implemented, i.e., when the searchlight pattern is selected, radiation is prohibited after 30 seconds and the maintenance operator must enter the Override Radiate Inhibit command to continue the pattern. In addition to commands specifying the above transmitter state, there is a waveguide switch command (Transmitter-Antenna). The switch transfers power between a dummy load and the antenna. In redundant channel configurations, these two switches are configured to switch either channel to the antenna as well as one or both to dummy loads. The switching logic tree for redundant channel is as follows:

| | | | | |
|---|---|---|---|---|
| Channel 1 Antenna - command | 0 | 1 | 1 | 0 |
| Channel 2 Antenna - command | 1 | 0 | 1 | 0 |
| Channel 1 connection | DL1 | ANT | DL2 | DL1 |
| Channel 2 connection | ANT | DL2 | ANT | DL2 |

DL1 is the channel 1 dummy load

DL2 is the channel 2 dummy load

ANT indicates the specifies channel is connected to the antenna

To prevent internal transmitter protection circuitry faults from occurring, provision is provided in the program to ensure that transmitter high voltage is off during periods of switching the transmitter waveguide between antenna and dummy load (i.e., the total high voltage command off time must exceed 1 second).

5-14.2.22 Redundant Channel Control. In the redundant configuration, two complete transmitter - receiver - RDA control chains are provided with only pedestal/antenna and tower/utilities in common. Although mounted on the antenna, dual receiver front ends are also provided. To the extent feasible, the two chains are configured to operate independently. Interconnections and added switching include antenna to receiver switching and pedestal control switching and an interprocessor channel connecting the RDASC processors. An adaptation data variable called Redundant Channel Configuration Flag reports whether the RDA is in dual or single channel configuration. Interprocessor channel I/O errors are reported by the REDUN CHAN INTERFACE I/O STATUS ERROR alarm. Operating state control of each channel operates independently with the following exceptions and added considerations:

5-14.2.22.1 Status Request Command. Prior to entering Operate, the RDASC sends a Status Request command to the other channel (via the interprocessor channel) to determine whether it is in Operate. If the other channel is in Operate, the RDA returns to the state present at the time the command to Operate was received and issues the UNABLE TO CMD OPER-REDUN CHAN ON-LINE alarm. Lack of response within two seconds is interpreted as not being in the Operate state. If this interrogation determines that the other channel is not in Operate , the RDA continues the transition to Operate sequence.

5-14.2.22.2 Command Other Channel to Standby Command. Upon receipt of the Command Other Channel to Standby command from the RPG, the RDA relays the command to the other channel via

the interprocessor link. The RDA enters the Standby state when this command is received from the other channel if in Remote Control or in Local Control with Remote Control Enabled, and return status indicating acknowledgement. Normally, this command is issued by the MSCF workstation operator when the link between the other channel and its RPG channel is broken, and the other channel is connected to its wideband user or Archive II recording is active. If the RDA is in Local Control and Remote Control is not enabled and Command Other Channel to Standby is received via the intercomputer channel, the command is rejected and a status message returned indicating the rejection. If the other channel rejects this command, alarm INTERPROCESSOR STBY COMMAND REJECTED is set. If the other channel does not acknowledge this command, the NO INTERPROCESSOR COMMAND RESPONSE alarm is set. If the other channel accepts the command, the "Redundant Channel Standby Command Accepted" status is sent to the RPG.

5-14.2.22.3 Receiver Waveguide Switch. The receiver waveguide switch is controlled only from channel 2 via the channel 2 command, and follows to the same position as the channel 2 pedestal control, i.e., when channel 2 has pedestal control, the receiver waveguide switch will connect the antenna receiver port to the channel 2 RFE input. In the event the receiver waveguide switch is not connected to the channel in Operate, the RDA CHANNEL CONTROL FAILURE alarm is set.

5-14.2.22.4 Interprocessor Status Data. Interprocessor status data is passed to the other channel upon request. The RDA requests status from the other channel at least once every scan sequence to monitor the interprocessor link status. Interprocessor channel response status is included in RDA Performance Data.

5-14.2.22.5 Controlling Channel. The controlling channel controls the pedestal. The non-controlling channel is unable to communicate with the pedestal, therefore the non-controlling channel inhibits monitoring of the pedestal status. Pedestal control switching is performed from channel 2 through the maintenance console interface. When channel 2 is un-energized, control will be from channel 1.

Table 5-31. RDASC Control Commands

| Command | Either Control | | Local Control | | Remote Control | |
|---|---|---|---|---|---|---|
| | RDA | RPG | RDA | RPG | RDA | RPG |
| Enable Local Control | | | | | | X |
| Accept Remote Control | | | | X | | |
| Request Local Control | X | | | | X | |
| Enable Remote Control | | | X | | | |
| Request Remote Control | | | | X | | |
| Operate | X | X | X | | | X |
| Off-line Operate | X | X | X | | | X |
| Standby | X | X | X | | | X |
| Restart | X | X | X | | | X |
| Select Mode | X | X | X | | | X |
| Select Local Vol Coverage Pattern | X | X | X | | | X |
| Select Remote Vol Coverage Pattern | | X | | | | X |
| Download Volume Coverage Pattern | | X | | X | | X |
| Restart Volume Coverage Pattern | | | | | | X |
| Restart Elevation Cut | | | | | | X |
| Enable Auto Calibration | X | X | X | | | X |
| Override Automatic Calibration | X | X | X | | | X |
| Enable ISU | X | X | X | | | X |
| Disable ISU | X | X | X | | | X |
| Override Radiate Inhibit | | | X | | | |
| Enable Data Transmission | X | X | X | | | X |
| Enable/Disable Archive II Recording | X | X | X | | | X |
| Playback | X | X | X | | | X |
| Display Performance Data | X | | X | | X | |
| * If Remote Control Enabled | | | | | | |

Table 5-31. RDASC Control Commands (continued)

| Command | Either Control | | Local Control | | Remote Control | |
|---|---|---|---|---|---|---|
| | RDA | RPG | RDA | RPG | RDA | RPG |
| Request RDA Summary Status Data | | X | | X | | X |
| Inspect/Change RDA Adaptation Data | X | | X | | X | |
| Enter Log Data | X | | X | | X | |
| Display Log Data | X | | X | | X | |
| Switch to Aux Power | X | X | X | | | X |
| Switch to Utility Power | X | X | X | | | X |
| Generate and Send Message (from RDA) | X | | X | | X | |
| Display Message (at RDA) | X | | X | | X | |
| Terminate Program | X | | X | | | |
| Other Channel to Standby | | X | | X* | | X |
| * If Remote Control Enabled | | | | | | |

Table 5-32. RDA State Transition Matrix

| To<br>From | Local Operate | Remote Operate* | Local Standby | Either Standby | Local Off-line Operate | Either Off-line Operate | Local Playback | Remote Playback |
|---|---|---|---|---|---|---|---|---|
| Local Operate | | RPG:RRC and RDA:ENRC | RDA:Standby or RDA:Restart | | RDA: Off-line Operate | | RDA: Playback | |
| Remote Operate | RDA:RELC and RPG:ENLC | RPG:Restart | | RPG:Standby | | RPG:Off-line Operate | | RPG: Playback |
| Local Standby | RDA: Operate | | RDA:Restart | RDA:ENRC | RDA: Off-line Operate | | RDA: Playback | |
| Either Standby | RDA:Operate | RPG:Operate | RDA:Restart or RDA:RELC | RPG:Restart | | RDA: Off-line Operate or RPG: Off-line Operate | RDA: Playback | RPG: Playback |
| Local Off-line Operate | RDA:Operate | | RDA:Restart or RDA:RELC | | | RDA:ENRC | RDA: Playback | |
| Either Off-line Operate | RDA:Operate | RPG:Operate | RDA:Restart | RPG:Standby or RDA:Standby | RDA:RELC | RPG:Restart | RDA: Playback | RPG: Playback |
| Local Playback | RDA:Operate | | RDA:Standby or RDA:Restart | | RDA: Off-line Operate | | | RPG:RRC and RDA:ENRC |

Table 5-32. RDA State Transition Matrix (continued)

| To<br>From | Local Operate | Remote Operate* | Local Standby | Either Standby | Local Off-line Operate | Either Off-line Operate | Local Playback | Remote Playback |
|---|---|---|---|---|---|---|---|---|
| Remote Playback | | RPG:Operate | | RPG:Standby | | RPG:Off-line Operate | RDA:RELC and RPG:ENLC | RPG:Restart |

- - - - -

NOTE: Transition State “Startup” not shown. Also “power recovery” Restart not shown.

Legend: RRC - Request Remote Control (At MSCF/RPG HCI, click RDA-Control box for RDA Control/Status window, ensure Control: = Remote (RPG))
RELC - Request Local Control (At RDA/MMI: RELC)
ENRC - Enable Remote Control (At RDA/MMI: ENRC)
ENLC - Enable Local Control (At MSCF/RPG HCI, click RDA-Control box for RDA Control/Status window, click on Enable Local (RDA))
RDA - Command Issued from RDA
RPG - Command Issued from RPG

* In RDA Control window for UD70/170 RPG.

5-14.3 VOLUME COVERAGE CONTROL.

Volume coverage control initiates and controls execution of the selected volume coverage pattern (VCP) as well as RDA calibration functions. The locally stored patterns may eventually include antenna searchlight and sector scans with specified angles, waveform types, pulse width, PRF(s) etc., for maintenance use.

5-14.3.1 Selected VCP. The selected VCP is determined by the Select Volume Coverage Pattern command issued at the RDA maintenance terminal or by the RPG. If this command has not been issued, the default VCP identified in the RDA State file is selected. If a new VCP is selected while a volume scan sequence (refer to paragraph 5-14.3.3 ) is in progress, the new VCP takes effect when the next volume scan starts. The new VCP selected is a locally stored volume coverage pattern or a remote pattern that was previously downloaded to the RDA from the RPG. If an invalid remote VCP is downloaded from the RPG, the INVALID REMOTE VCP RECEIVED alarm is set. If a remote VCP has been selected for execution but was not downloaded from the RPG, the alarm REMOTE VCP NOT DOWNLOADED is set. The volume scan sequence is restarted immediately upon receipt of the Restart Volume Coverage command. The current elevation cut is restarted immediately upon receipt of the Restart Elevation Cut command.

5-14.3.2 Maintenance VCP. A maintenance VCP is selectable from the RDA maintenance terminal or the RPG only when the RDA is in maintenance mode.

5-14.3.3 Volume Scan. The following volume scan sequence is couched in terms of a constant elevation cut type of scan pattern. However, the program is to be designed to facilitate inclusion of the other types of scan patterns. For a multiple constant elevation cut pattern, the volume coverage control program initiates, where required, the following functions:

5-14.3.3.1 Start Volume Scan.

- Pedestal on, transmitter HV on, waveguide switched to antenna position.
- This function commands the Control Pedestal program function to transition the pedestal to the start elevation of the selected VCP and to start scanning at the azimuth angle of the VCP.
- The tests within the Perform RDA Calibration program function are scheduled during the period of transition to start position of the VCP, subject to conditions specified therein. If this time is insufficient, these tests may also be scheduled during the transition between elevation cuts (paragraph 5-14.3.3.5 ).

5-14.3.3.2 Elevation Cut Startup.

- This function initiates downloading of the Signal Processing Subsystem macrocode and radial processing parameters by the Control Signal Process program function. This includes transmitter, receiver, and RF generator parameters as well as SPS parameters.
- When Pedestal “Angle Rate Match” is received from Control Pedestal program function, radial processing within the Control Signal Processor program function is

initiated. “Angle Rate Match” indicates that angle is within 0.2 degrees of commanded angle and angle rate is within 10 percent of command rate.

- Control Signal Processing program function reads the radial report. Due to pipeline delays, first valid radial data is that read following the fourth PSP interrupt after “Angle Rate Match” is received.

- Radial processing continues until the end of the cut. End of cut occurs when a radial is received after passing the start of cut radial. The RDA processes a maximum of 400 radials per elevation cut. If the RDA forms 400 radials prior to the end of an elevation cut, the EXCESSIVE RADIALS IN A CUT alarm is set.

- The starting azimuth angle of the cut is that of the first set of valid data taken after “Angle Rate Match” is set.

5-14.3.3.3 End of PRF Sector. The Control SP function is commanded to change pulse parameters to new values as specified by the VCP on the first radial initiated beyond a sector edge.

5-14.3.3.4 End of Cut. The end of cut is the last radial received beyond the start of cut radial.

5-14.3.3.5 Transition to New Elevation. The time required for elevation transition is available to perform RDA calibration functions. The nominal time for elevation transition is determinable from the elevation angle change.

5-14.3.3.6 New Elevation Cut. Paragraphs 5-14.3.3.2 through 5-14.3.3.4 are repeated for the new elevation cut. The issuance of the “Start” for the new cut does not, however, precede the completion of the performance/calibration operations in the PSP.

5-14.3.3.7 End of Scan Period. The procedures to be followed during the last elevation cut are the same as the lower cuts. At the end of the last elevation cut, paragraphs 5-14.3.3.1 and 5-14.3.3.7 are repeated for the next volume scan.

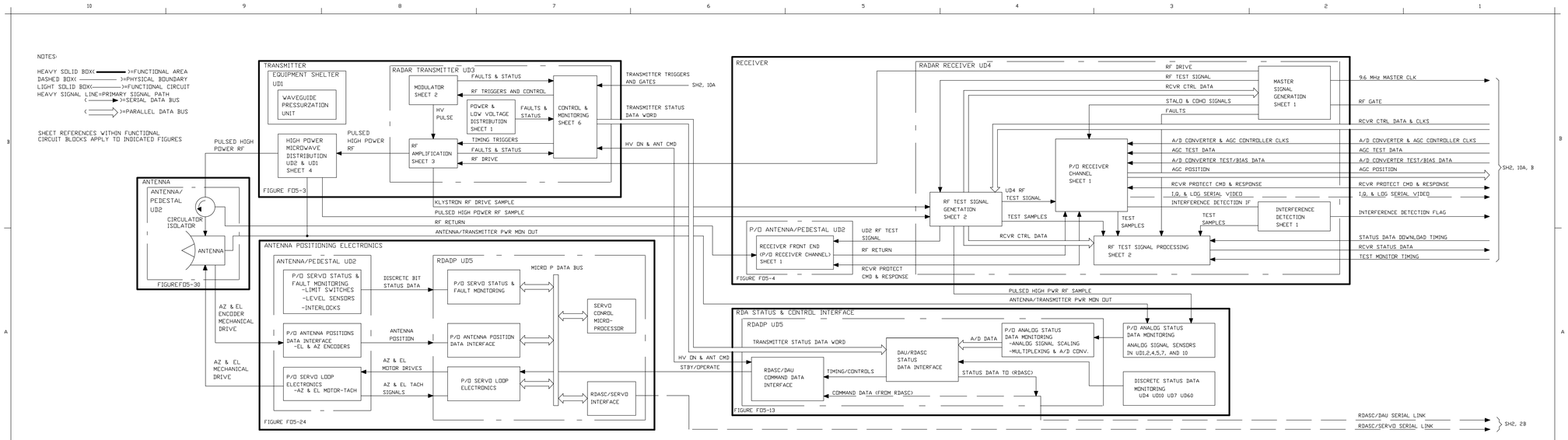


Figure FO5-1. RDA Group Block Diagram (Sheet 1 of 2)

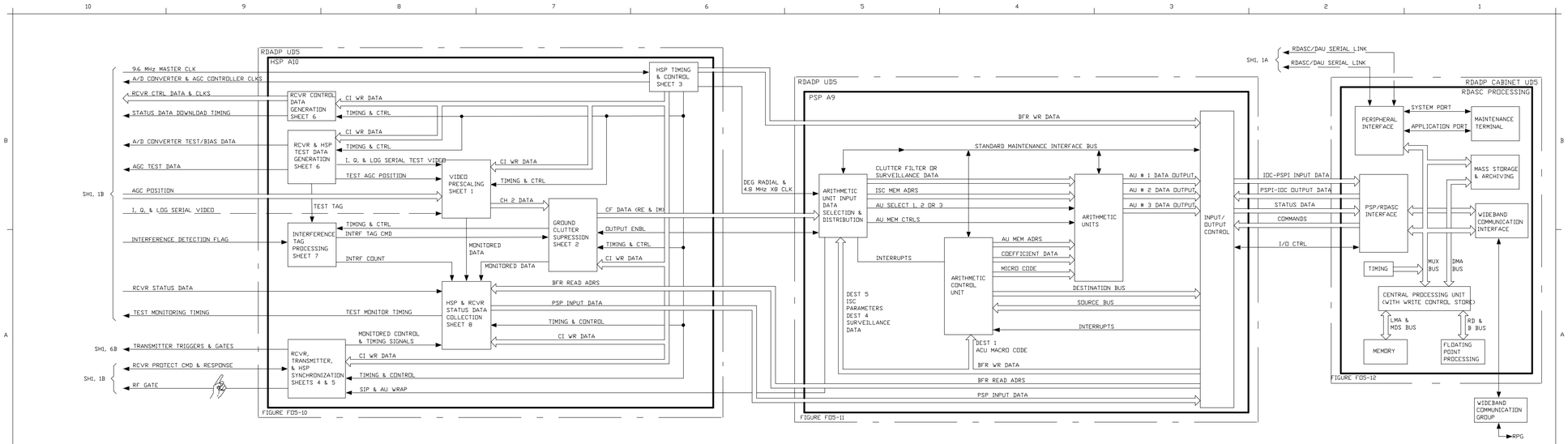


NX1868

Figure FO5-1. RDA Group Block Diagram
(Sheet 2 of 2)

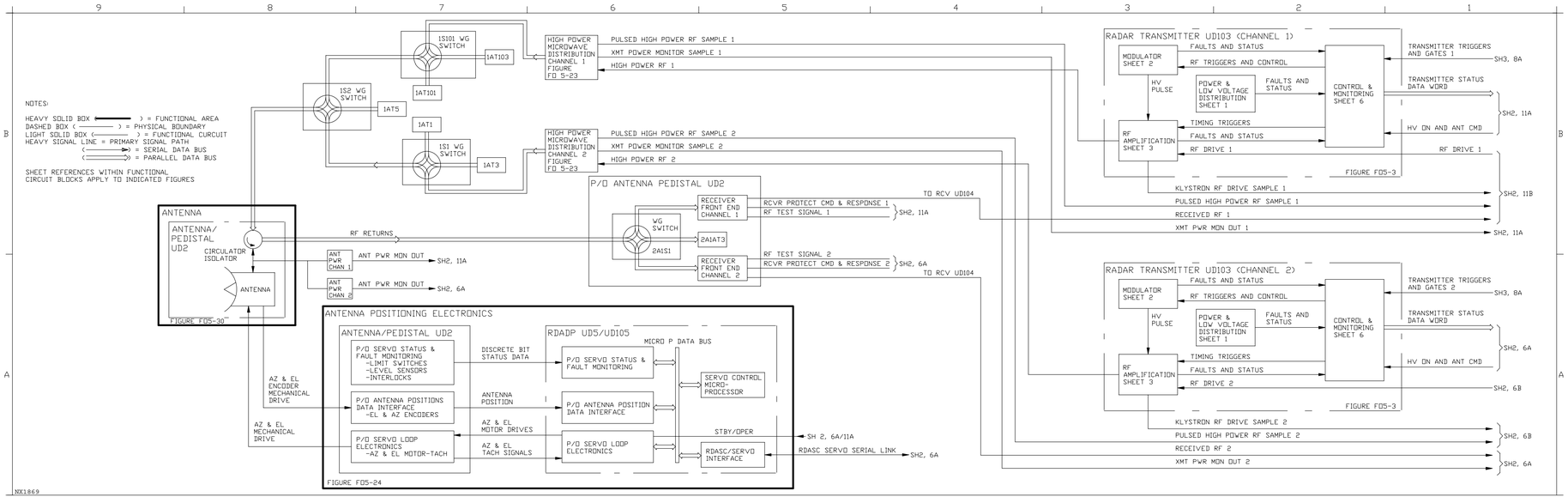


Figure FO5-2. Redundant RDA Group Block Diagram (Sheet 1 of 3)

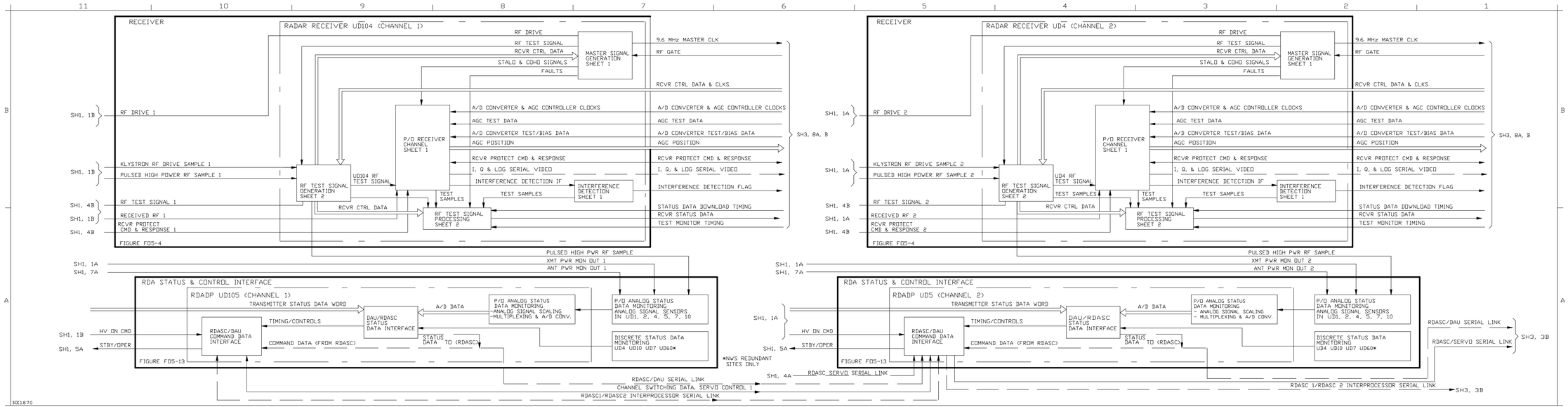


Figure FO5-2. Redundant RDA Group Block Diagram
(Sheet 2 of 3)

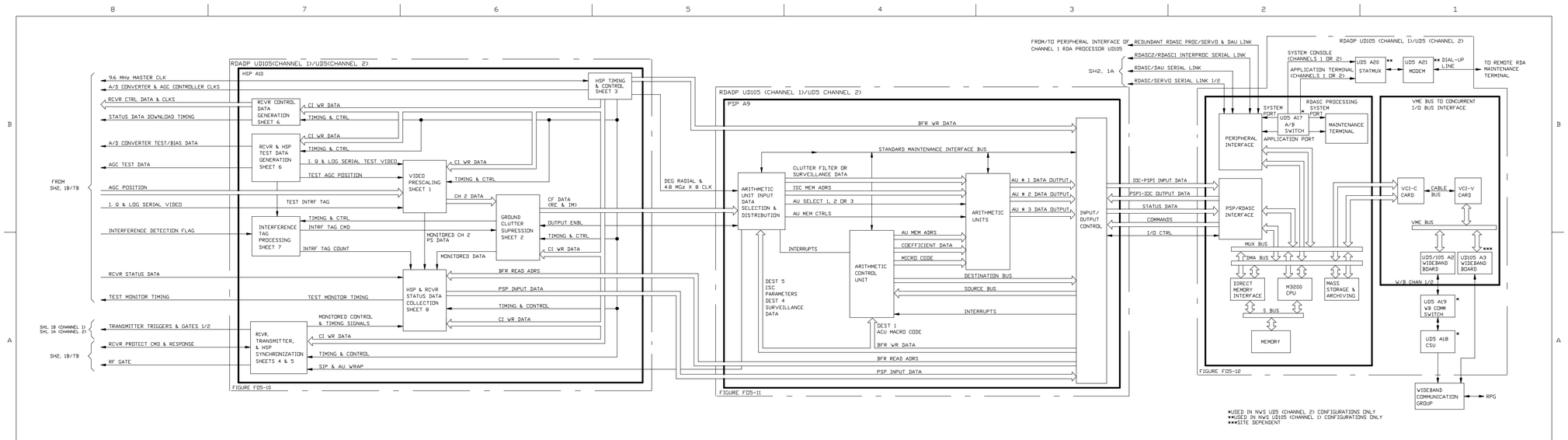


Figure FO5-2. Redundant RDA Group Block Diagram
(Sheet 3 of 3)

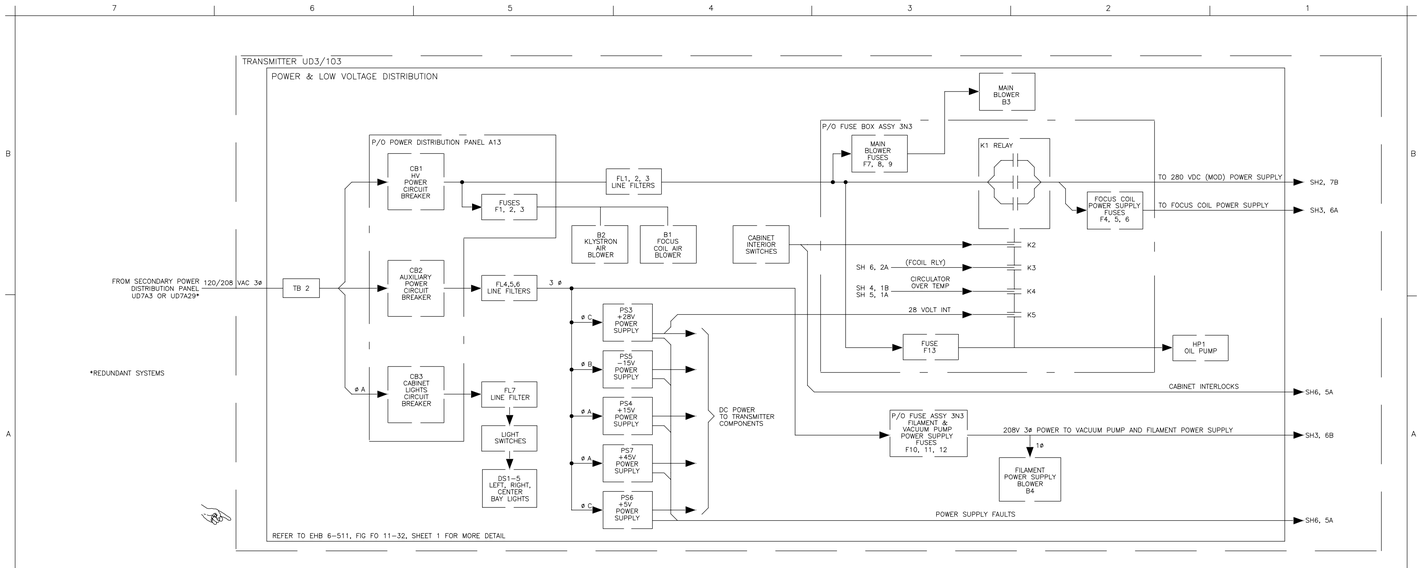


NX1872

Figure FO5-3. Transmitter Functional Block Diagram
(Sheet 1 of 6)

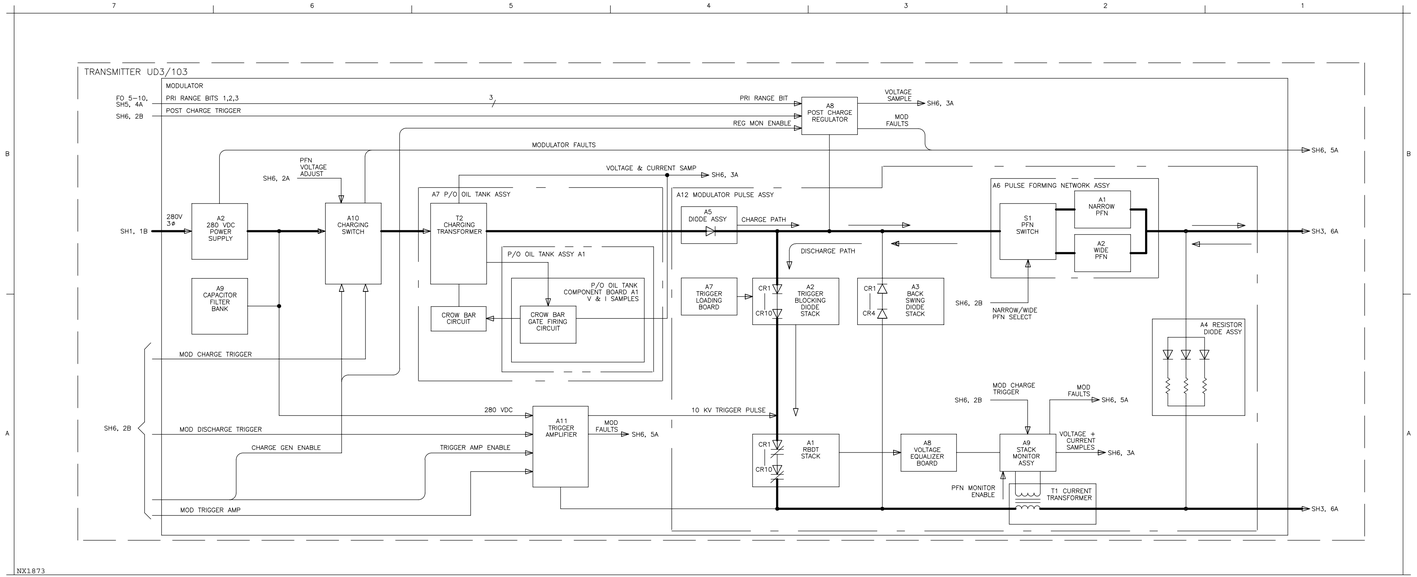


Figure FO5-3. Transmitter Functional Block Diagram
(Sheet 2 of 6)

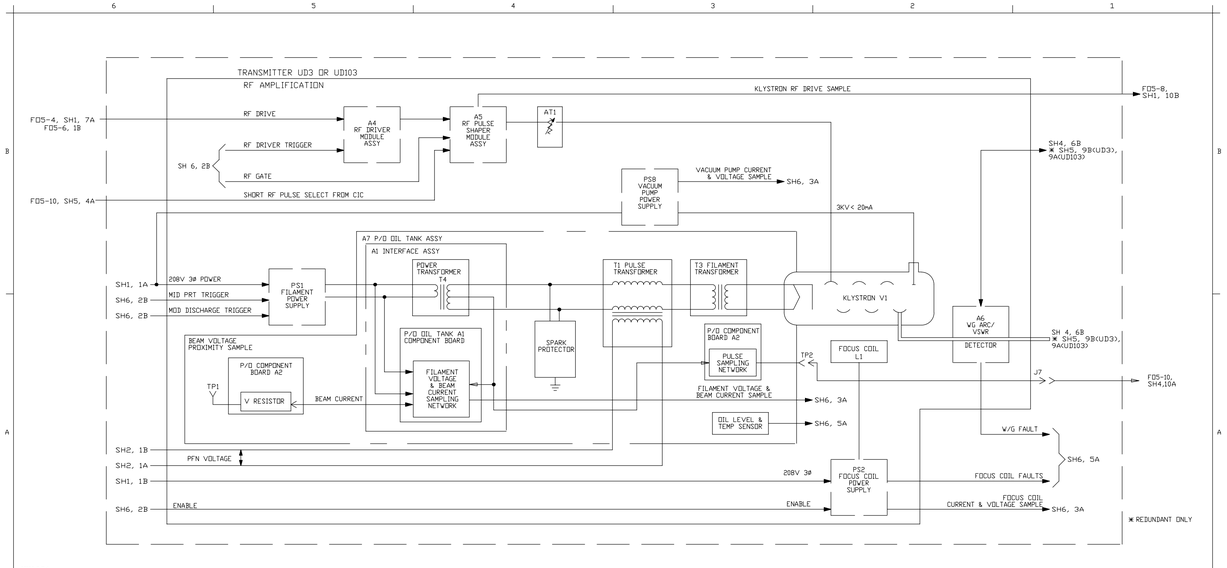


Figure FO5-3. Transmitter Functional Block Diagram (Sheet 3 of 6)

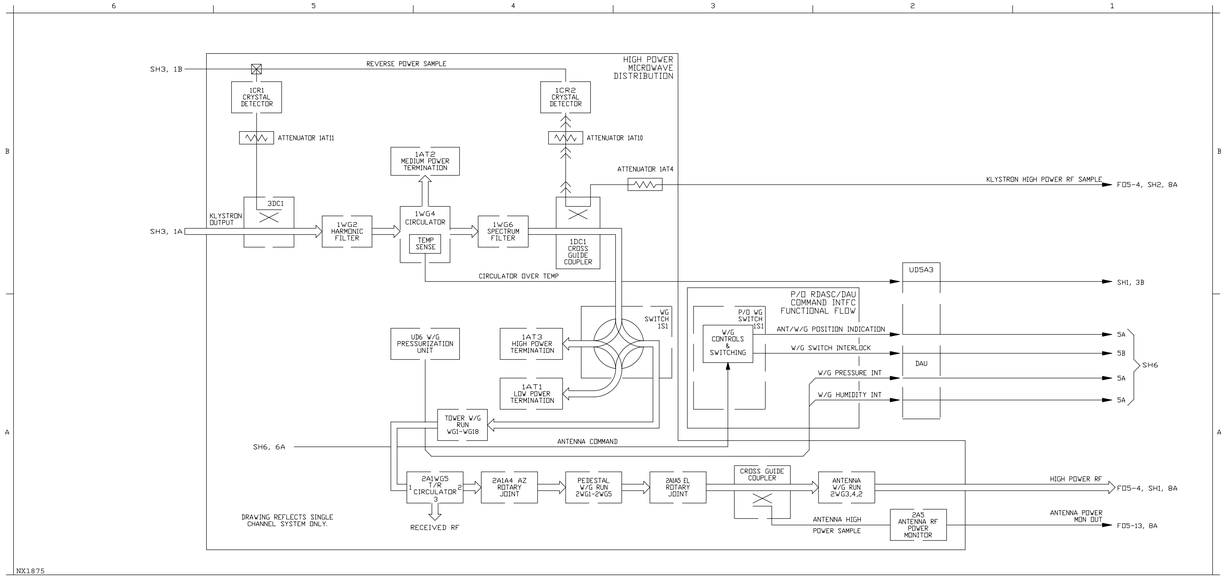


Figure FO5-3. Transmitter Functional Block Diagram
(Sheet 4 of 6)

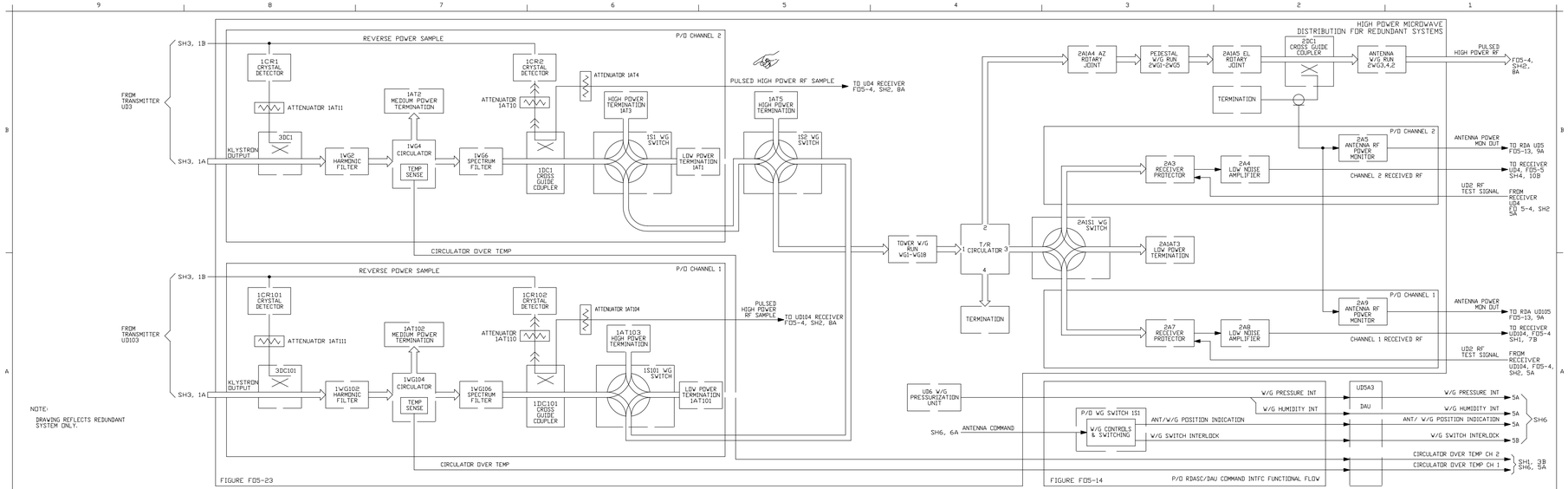


NX1876

Figure FO5-3. Transmitter Functional Block Diagram (Sheet 5 of 6)

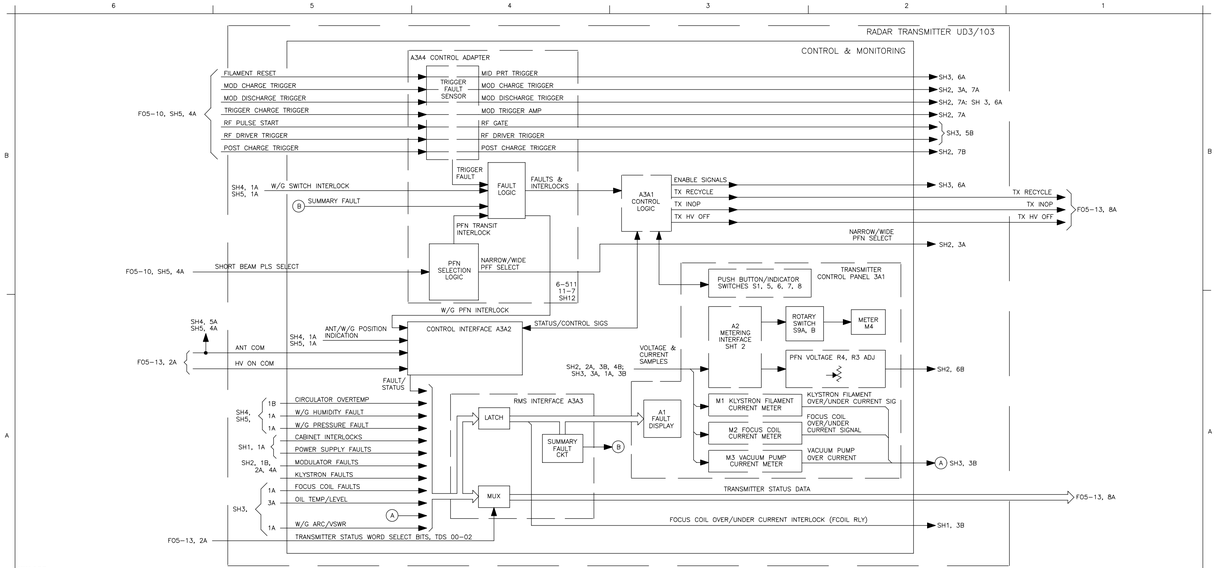


Figure FO5-3. Transmitter Functional Block Diagram
(Sheet 6 of 6)

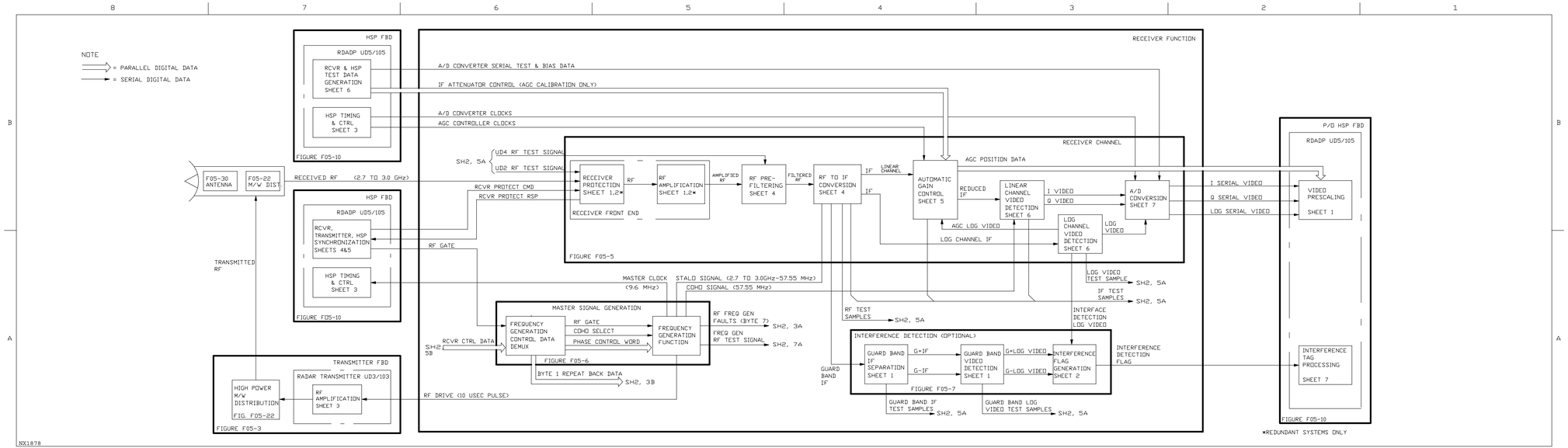


Figure FO5-4. Receiver Functional Block Diagram
(Sheet 1 of 2)

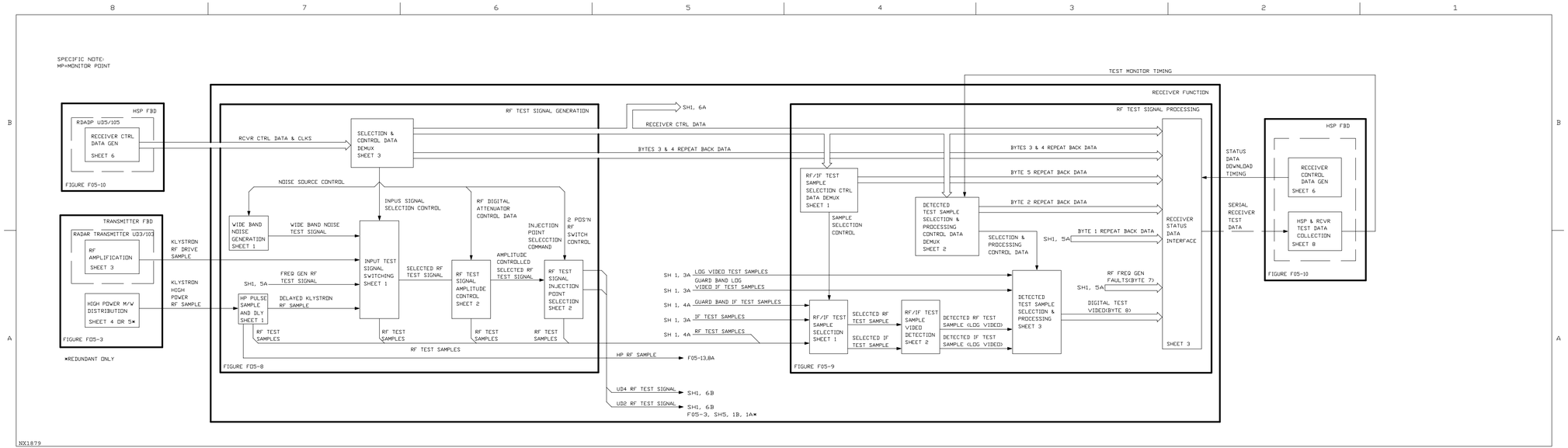


Figure FO5-4. Receiver Functional Block Diagram
(Sheet 2 of 2)

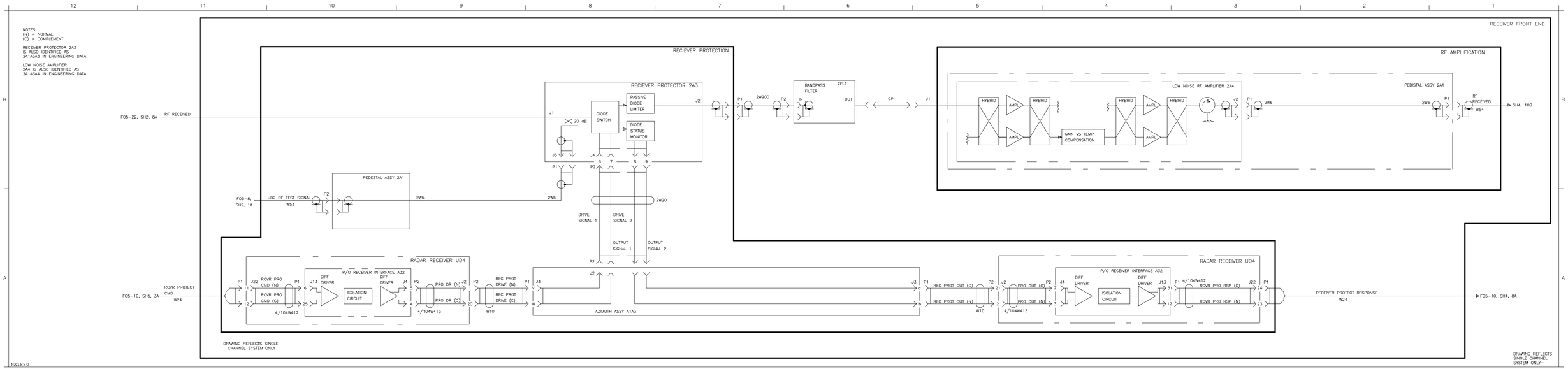


Figure FO5-5. Receiver Channel, Functional Flow Diagram
(Sheet 1 of 7)

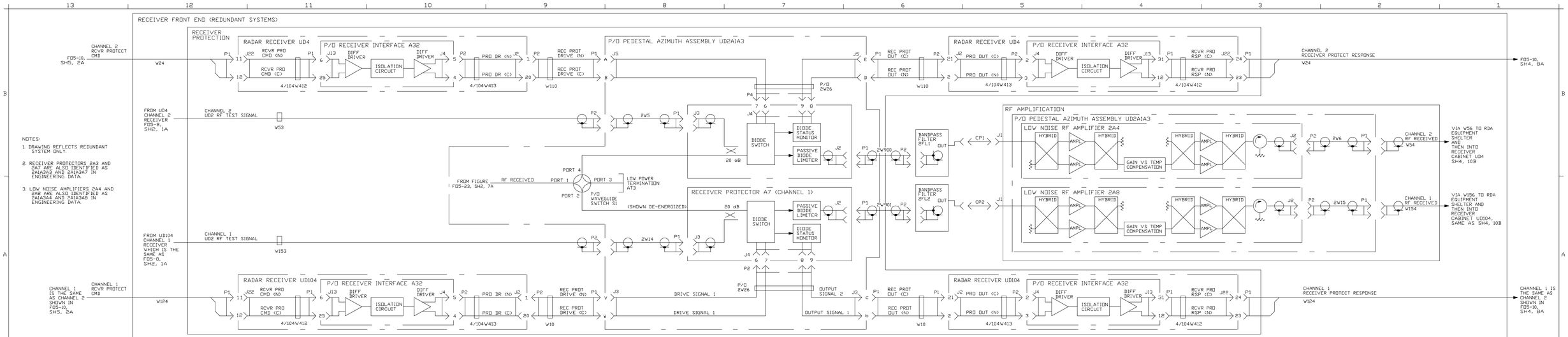


Figure FO5-5. Receiver Channel, Functional Flow Diagram
(Sheet 2 of 7)

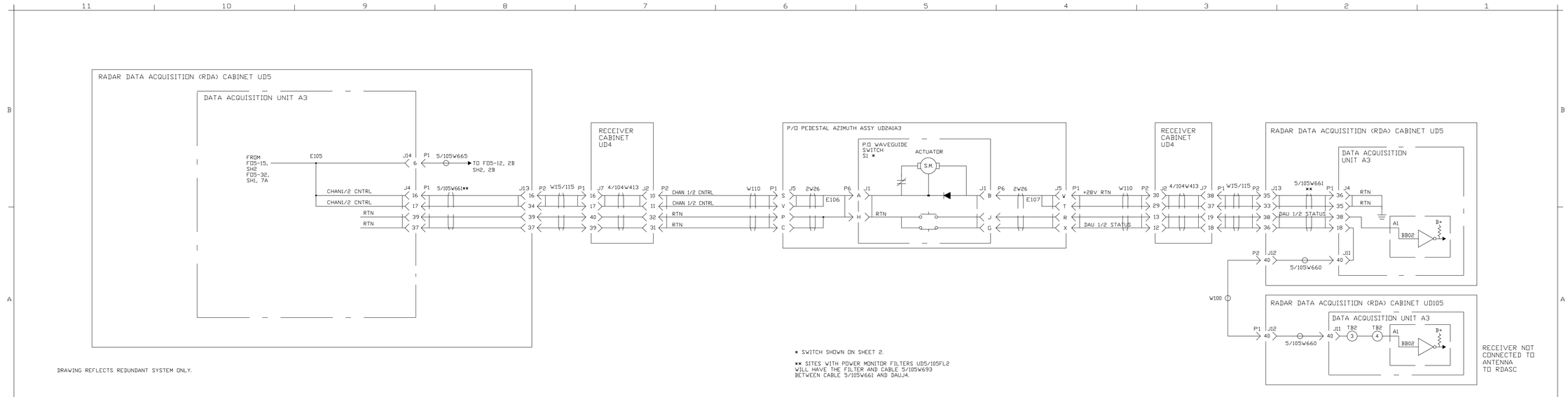


Figure FO5-5. Receiver Channel, Functional Flow Diagram (Sheet 3 of 7)

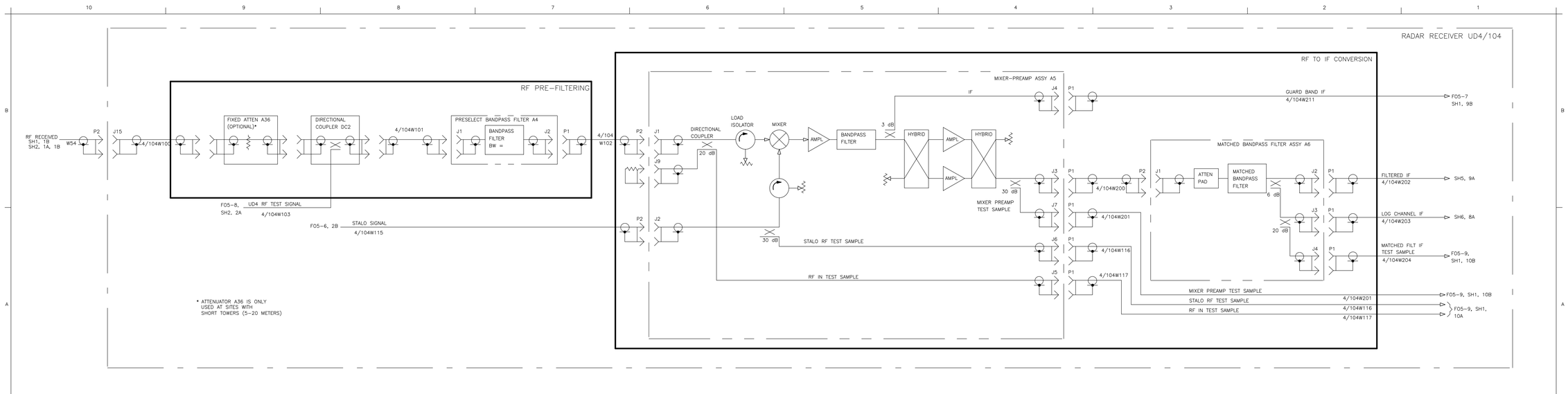


Figure FO5-5. Receiver Channel, Functional Flow Diagram (Sheet 4 of 7)

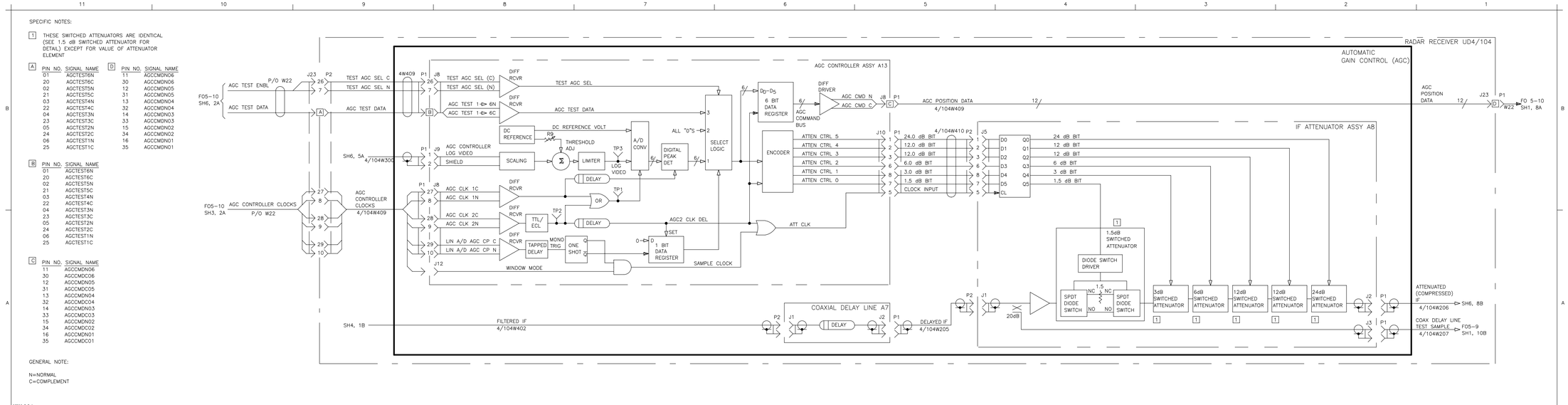


Figure FO5-5. Receiver Channel, Functional Flow Diagram (Sheet 5 of 7)

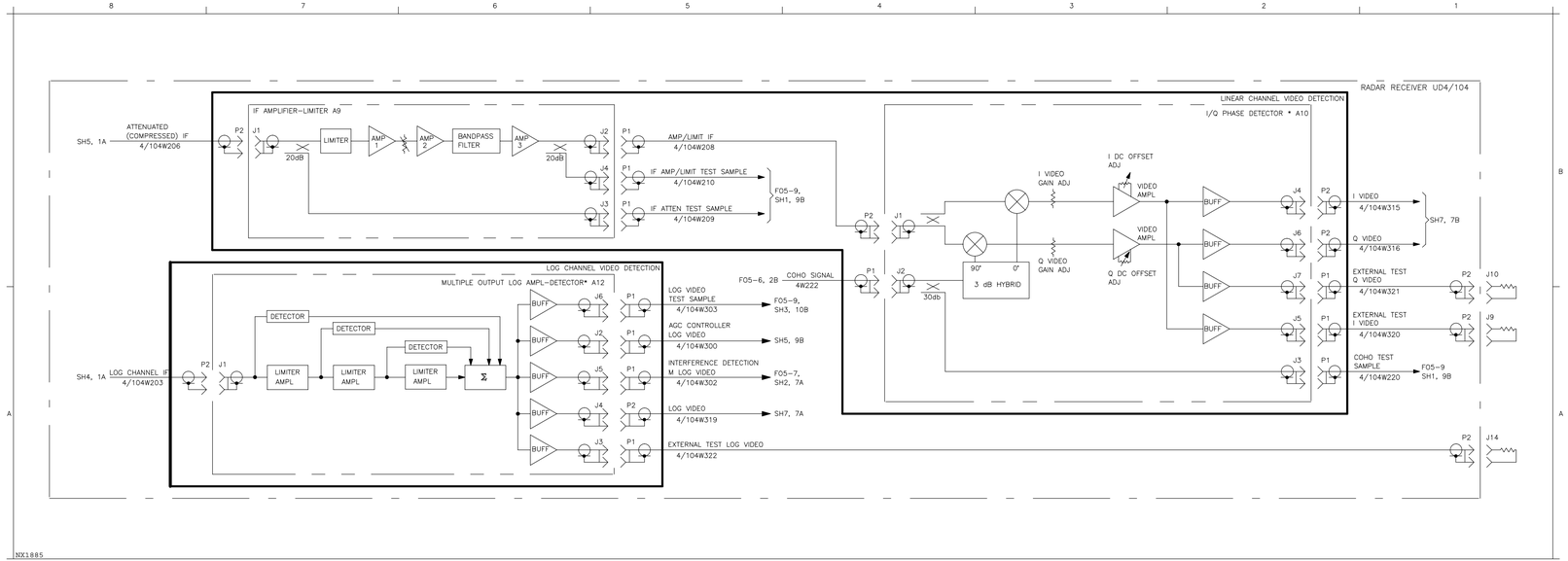


Figure FO5-5. Receiver Channel, Functional Flow Diagram (Sheet 6 of 7)

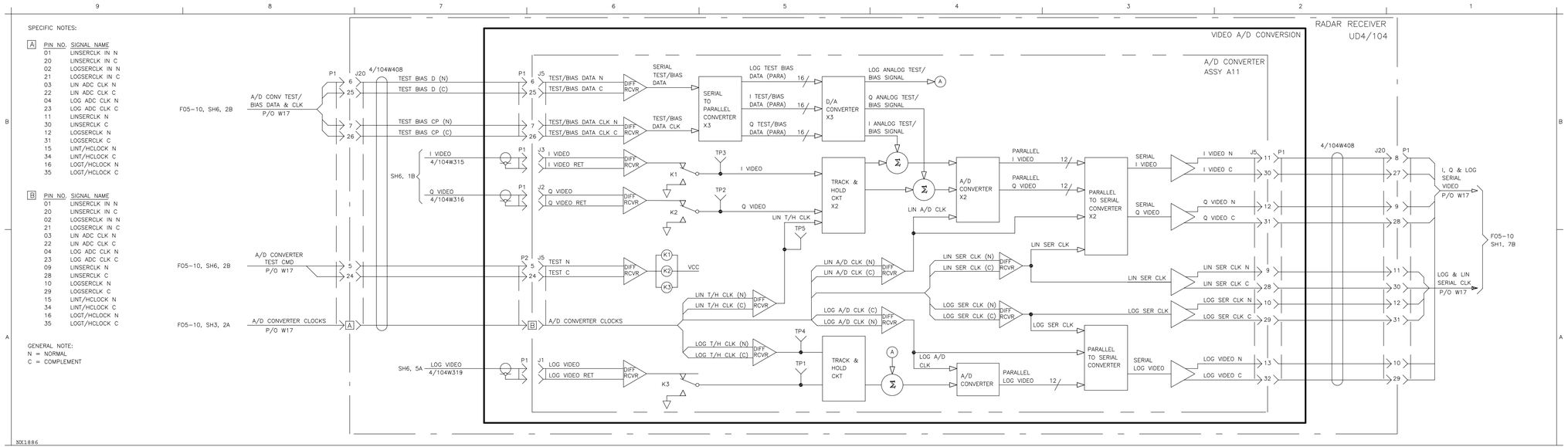


Figure FO5-5. Receiver Channel, Functional Flow Diagram (Sheet 7 of 7)

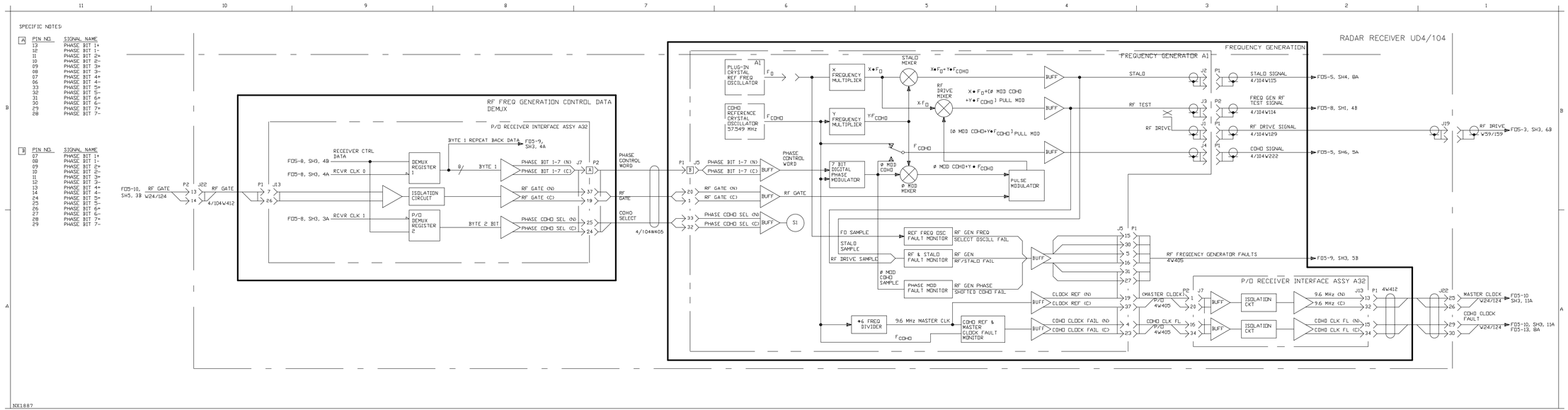


Figure FO5-6. Master Signal Generation, Functional Flow Diagram

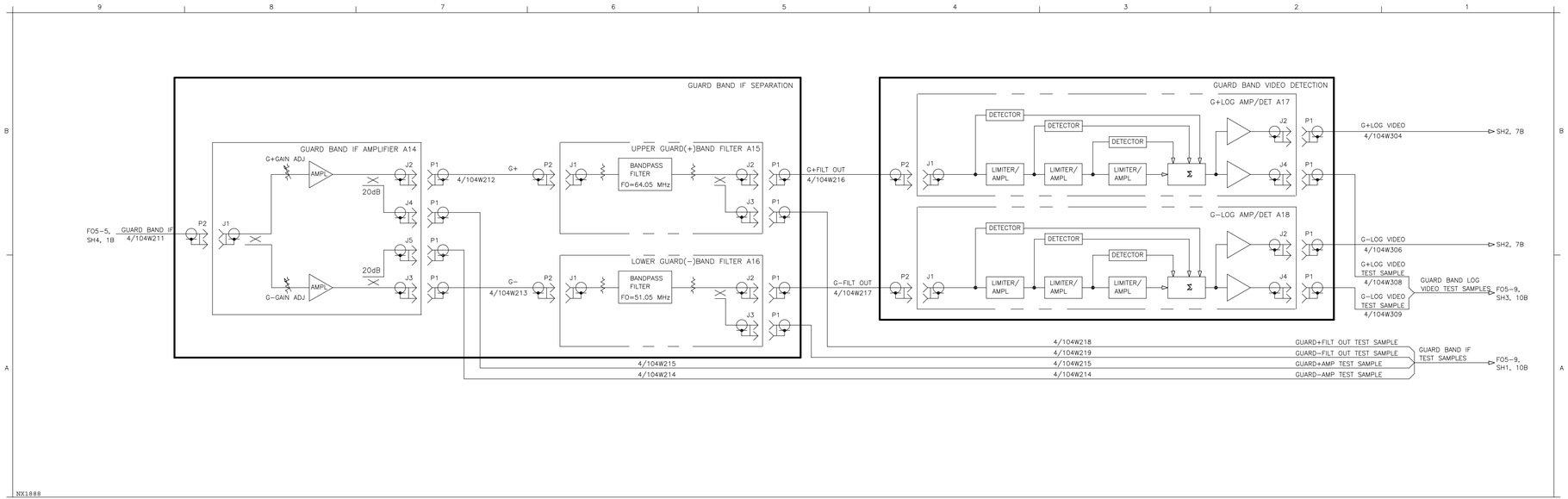


Figure FO5-7. Interference Detection, Functional Flow Diagram (Sheet 1 of 2)

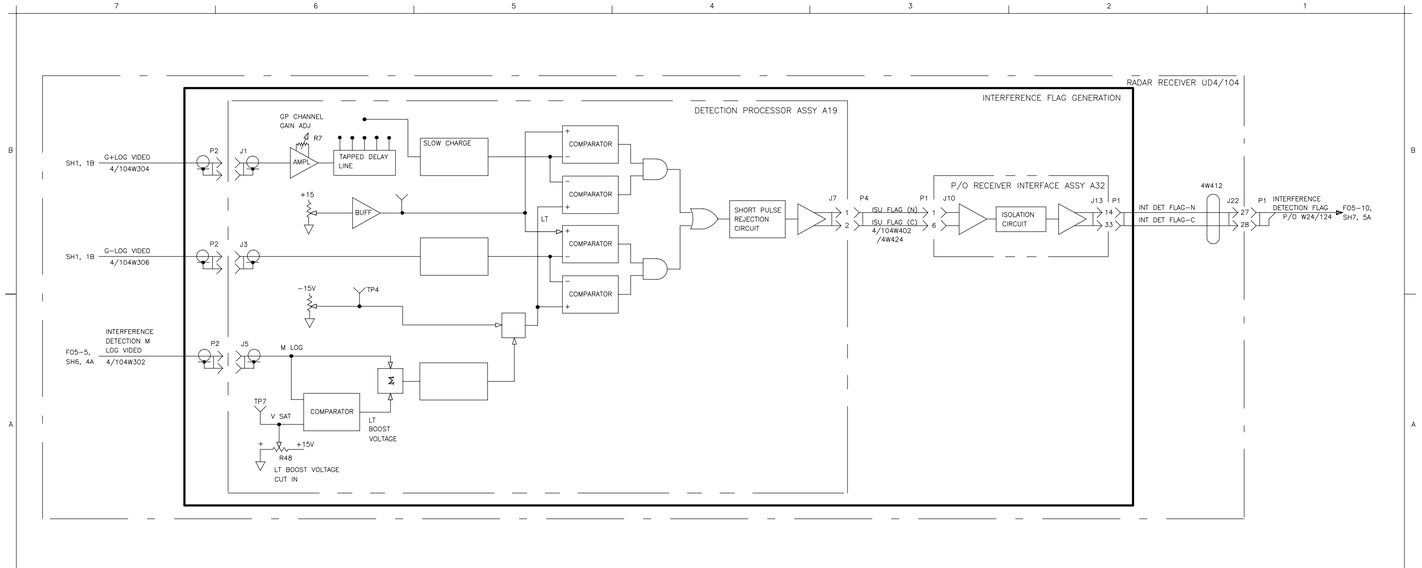


Figure FO5-7. Interference Detection, Functional Flow Diagram (Sheet 2 of 2)

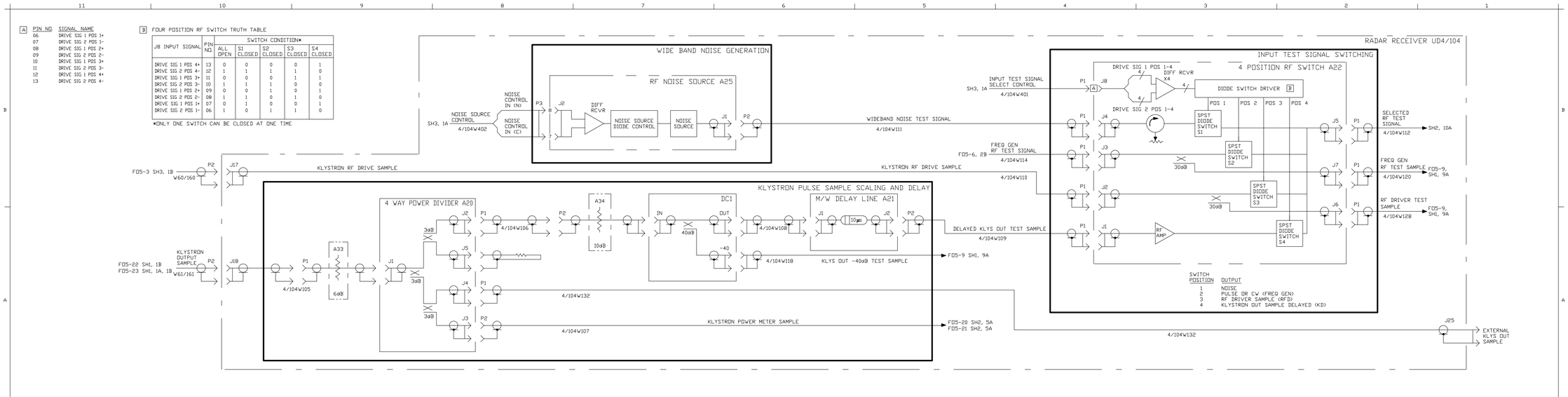


Figure FO5-8. RF Test Signal Generation Functional Flow Diagram
(Sheet 1 of 3)

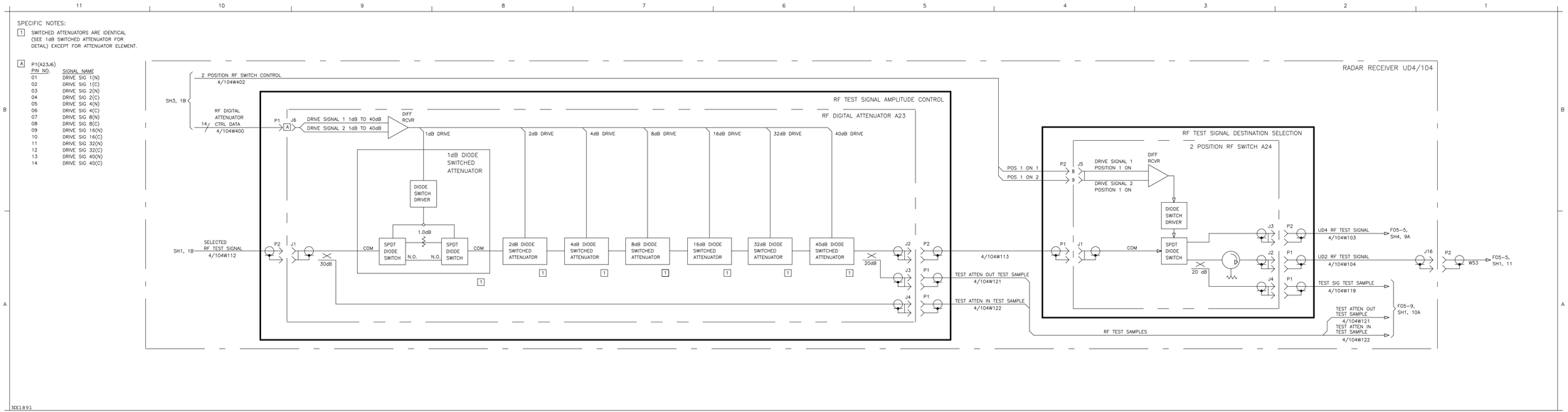


Figure FO5-8. RF Test Signal Generation Functional Flow Diagram (Sheet 2 of 3)

SPECIFIC NOTES:

A 4/104J21 (P2)

| PIN NO. | SIGNAL NAME |
|---|---|
| 01 | RCVRRCTLD0-N |
| 02 | RCVRRCTLD0-C |
| 03 | RCVRRCTLD1-N |
| 04 | RCVRRCTLD1-C |
| 05 | RCVRRCTLD2-N |
| 06 | RCVRRCTLD2-C |
| 07 | RCVRRCTLD3-N |
| 08 | RCVRRCTLD3-C |
| 09 | RCVRRCTLD4-N |
| 10 | RCVRRCTLD4-C |
| 11 | RCVRRCTLD5-N |
| 12 | RCVRRCTLD5-C |
| 13 | RCVRRCTLD6-N |
| 14 | RCVRRCTLD6-C |
| 15 | RCVRRCTLD7-C |
| 16 | RCVRRCTLD7-C |
| 17 | RCVRCLK 0-N |
| 18 | RCVRCLK 0-C |
| 20 | RCVRCLK 1-N |
| 21 | RCVRCLK 1-C |
| 22 | RCVRCLK 2-N |
| 23 | RCVRCLK 2-C |
| 24 | RCVRCLK 3-N |
| 25 | RCVRCLK 3-C |
| 26 | RCVRCLK 4-N |
| 27 | RCVRCLK 4-C |
| 28 | RCVRCLK 5-N |
| 29 | RCVRCLK 5-C |

B A32J9 (P1)

| PIN NO. | SIGNAL NAME |
|---|---|
| 01 | RCVRRCTLD0-N |
| 20 | RCVRRCTLD0-C |
| 02 | RCVRRCTLD1-N |
| 21 | RCVRRCTLD1-C |
| 03 | RCVRRCTLD2-N |
| 22 | RCVRRCTLD2-C |
| 04 | RCVRRCTLD3-N |
| 23 | RCVRRCTLD3-C |
| 05 | RCVRRCTLD4-N |
| 24 | RCVRRCTLD4-C |
| 06 | RCVRRCTLD5-N |
| 25 | RCVRRCTLD5-C |
| 07 | RCVRRCTLD6-N |
| 26 | RCVRRCTLD6-C |
| 08 | RCVRRCTLD7-C |
| 27 | RCVRRCTLD7-C |
| 09 | RCVRCLK 0-N |
| 28 | RCVRCLK 0-C |
| 11 | RCVRCLK 1-N |
| 30 | RCVRCLK 1-C |
| 12 | RCVRCLK 2-N |
| 31 | RCVRCLK 2-C |
| 13 | RCVRCLK 3-N |
| 32 | RCVRCLK 3-C |
| 14 | RCVRCLK 4-N |
| 33 | RCVRCLK 4-C |
| 15 | RCVRCLK 5-N |
| 34 | RCVRCLK 5-C |

C A32J5 (P2)

| PIN NO. | SIGNAL NAME |
|---|---|
| 08 | DRIVE SIG 1(N) |
| 07 | DRIVE SIG 1(C) |
| 06 | DRIVE SIG 2(N) |
| 05 | DRIVE SIG 2(C) |
| 04 | DRIVE SIG 4(N) |
| 03 | DRIVE SIG 4(C) |
| 02 | DRIVE SIG 8(N) |
| 01 | DRIVE SIG 8(C) |
| 15 | DRIVE SIG 16(N) |
| 14 | DRIVE SIG 16(C) |
| 13 | DRIVE SIG 32(N) |
| 12 | DRIVE SIG 32(C) |
| 11 | DRIVE SIG 40(N) |
| 10 | DRIVE SIG 40(C) |

D A32J8 (P2)

| PIN NO. | SIGNAL NAME |
|---|---|
| 05 | DRIVE SIG 1 POS 1+ |
| 04 | DRIVE SIG 2 POS 1- |
| 03 | DRIVE SIG 1 POS 2+ |
| 02 | DRIVE SIG 2 POS 2- |
| 01 | DRIVE SIG 1 POS 3+ |
| 06 | DRIVE SIG 2 POS 3- |
| 08 | DRIVE SIG 1 POS 4+ |
| 07 | DRIVE SIG 2 POS 4- |

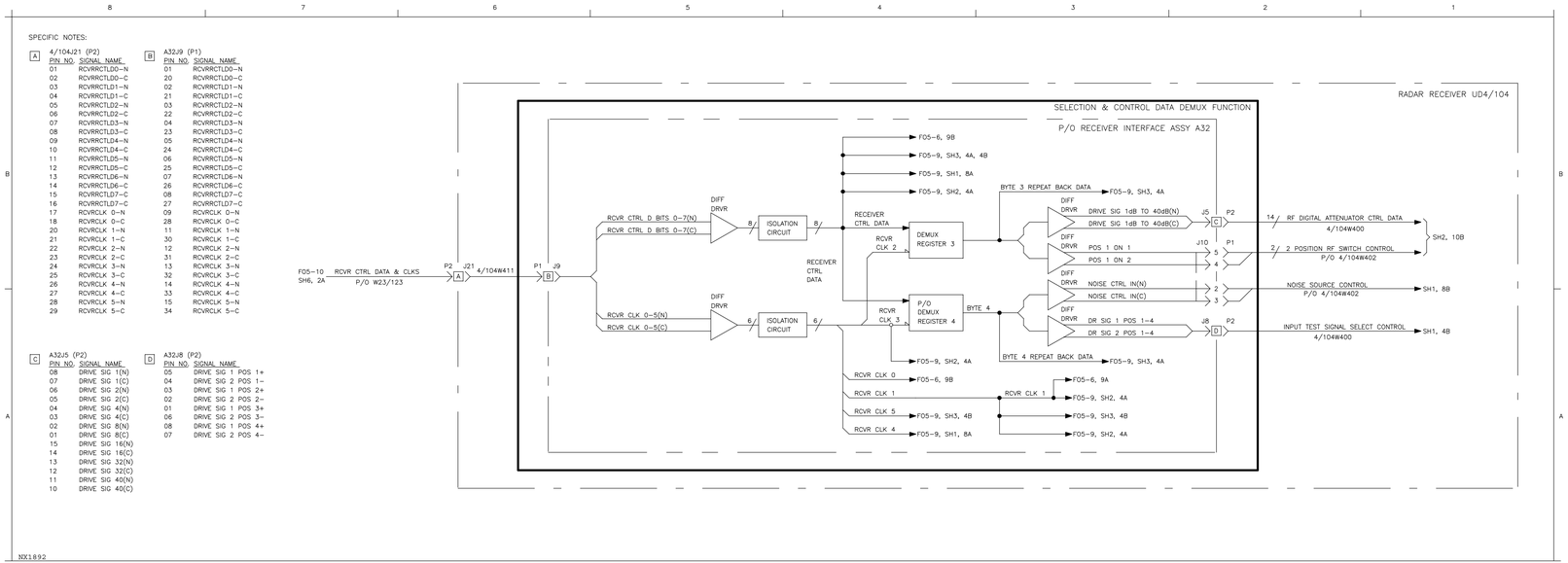


Figure FO5-8. RF Test Signal Generation Functional Flow Diagram (Sheet 3 of 3)

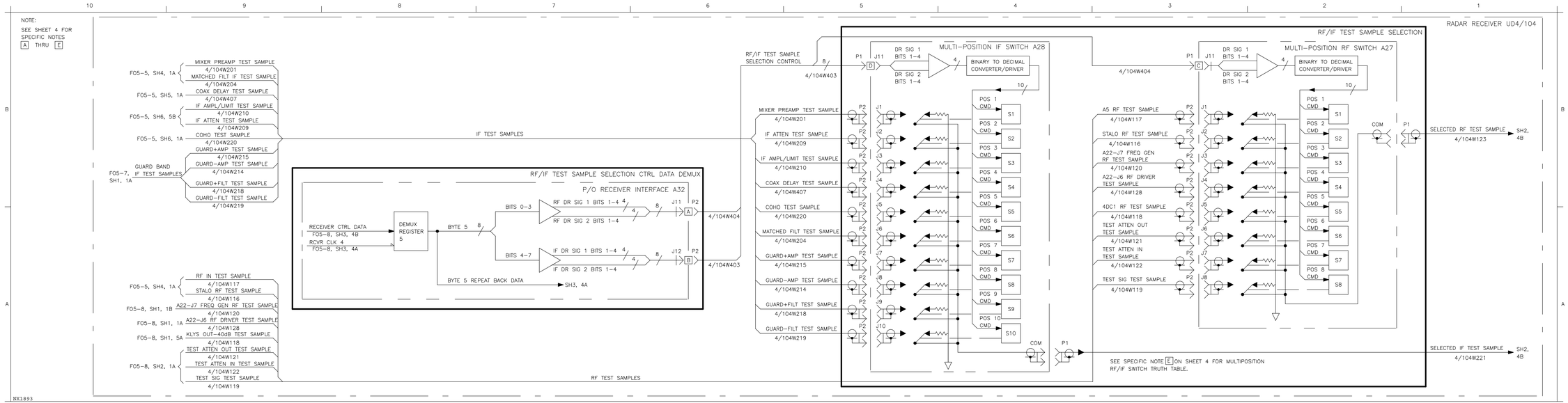


Figure FO5-9. RF Test Signal Processing, Functional Flow Diagram (Sheet 1 of 4)

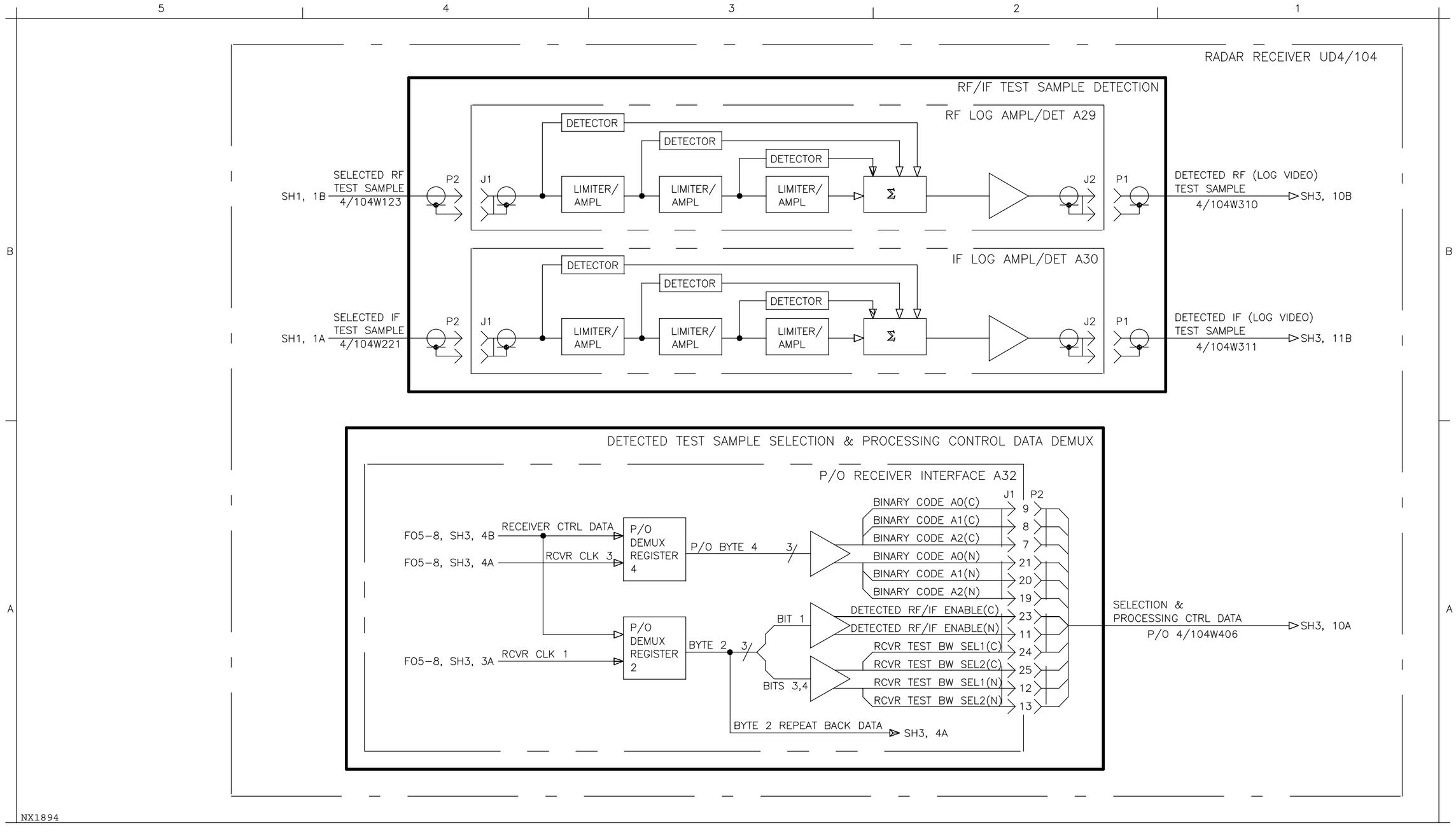


Figure FO5-9. RF Test Signal Processing, Functional Flow Diagram (Sheet 2 of 4)

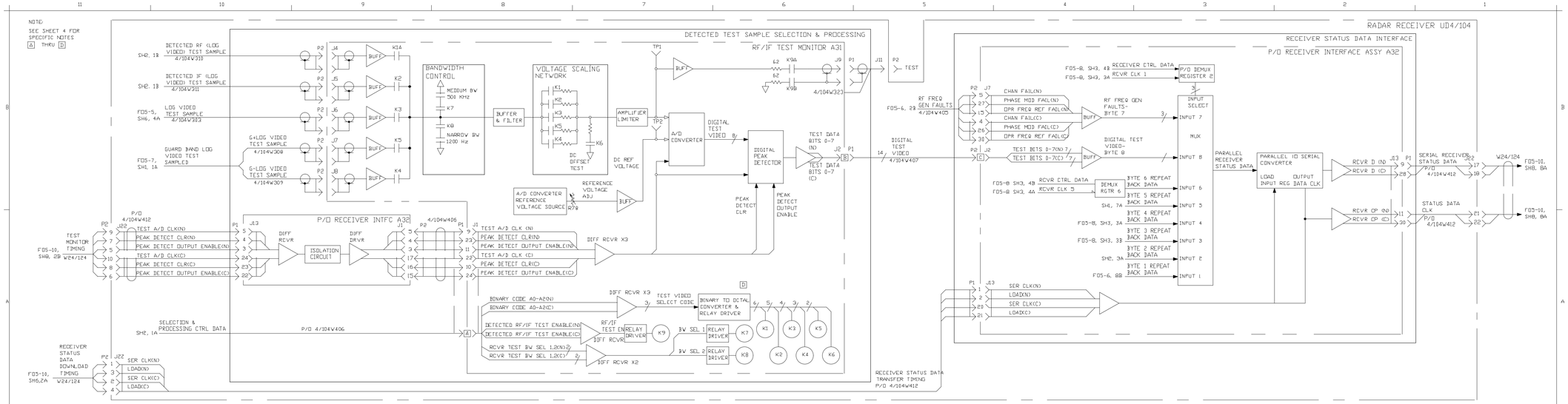


NX1895

Figure FO5-9. RF Test Signal Processing, Functional Flow Diagram (Sheet 3 of 4)

SPECIFIC NOTES FOR SHEET 1.

[A] P2(A32J11), 4/104W404

| PIN NO. | SIGNAL NAME |
|---|---|
| 02 | DRIVE SIG 1 BIT 4+ |
| 01 | DRIVE SIG 2 BIT 4− |
| 04 | DRIVE SIG 1 BIT 3+ |
| 03 | DRIVE SIG 2 BIT 3− |
| 06 | DRIVE SIG 1 BIT 2+ |
| 05 | DRIVE SIG 2 BIT 2− |
| 08 | DRIVE SIG 1 BIT 1+ |
| 07 | DRIVE SIG 2 BIT 1− |

[B] P2(A32J12), 4/104W403
SAME PIN NUMBERS
AND SIGNAL NAMES AS [A]

[C] P1(A27J11), 4/104W404

| PIN NO. | SIGNAL NAME |
|---|---|
| G | DRIVE SIG 1 BIT 4+ |
| H | DRIVE SIG 2 BIT 4− |
| E | DRIVE SIG 1 BIT 3+ |
| F | DRIVE SIG 2 BIT 3− |
| C | DRIVE SIG 1 BIT 2+ |
| D | DRIVE SIG 2 BIT 2− |
| A | DRIVE SIG 1 BIT 1+ |
| B | DRIVE SIG 2 BIT 1− |

[D] P2(A28J11), 4/104W403
SAME PIN NUMBERS
AND SIGNAL NAMES AS [C]

[E] MULTI−POSITION RF/IF SWITCH TRUTH TABLE

| J11 INPUT SIGNAL | PIN NO. | SWITCH CONDITION (2) ALL OFF | S1 ON | S2 ON | S3 ON | S4 ON | S5 ON | S6 ON | S7 ON | S8 ON | S9 ON (1) | S10 ON (1) |
|---|---|---|---|---|---|---|---|---|---|---|---|---|
| DRIVE SIG 1 BIT 4+ | G | 0 | 0 | 0 | 0 | 0 | 0 | 0 | 0 | 1 | 1 | 1 |
| DRIVE SIG 2 BIT 4− | H | 1 | 1 | 1 | 1 | 1 | 1 | 1 | 1 | 0 | 0 | 0 |
| DRIVE SIG 1 BIT 3+ | E | 0 | 0 | 0 | 0 | 1 | 1 | 1 | 1 | 0 | 0 | 0 |
| DRIVE SIG 2 BIT 3− | F | 1 | 1 | 1 | 1 | 0 | 0 | 0 | 0 | 1 | 1 | 1 |
| DRIVE SIG 1 BIT 2+ | C | 0 | 0 | 1 | 1 | 0 | 0 | 1 | 1 | 0 | 0 | 1 |
| DRIVE SIG 2 BIT 2− | D | 1 | 1 | 0 | 0 | 1 | 1 | 0 | 0 | 1 | 1 | 0 |
| DRIVE SIG 1 BIT 1+ | A | 0 | 1 | 0 | 1 | 0 | 1 | 0 | 1 | 0 | 1 | 0 |
| DRIVE SIG 2 BIT 1− | B | 1 | 0 | 1 | 0 | 1 | 0 | 1 | 0 | 1 | 0 | 1 |

(1)S9&S10 ARE USED IN 4A28 ONLY
(2)ONLY ONE SWITCH AT A TIME CAN BE IN THE ON POSITION

NX1896

SPECIFIC NOTES FOR SHEET 3.

[A] P1(A31J1),4/104W406

| PIN NO. | SIGNAL NAME |
|---|---|
| 01 | RCVR TST BW SEL 2N |
| 14 | RCVR TST BW SEL 2C |
| 02 | RCVR TST BW SEL 1N |
| 15 | RCVR TST BW SEL 1C |
| 03 | DETECT RF/IF ENABLE N |
| 16 | DETECT RF/IF ENABLE C |
| 05 | BINARY CODE A0 C |
| 18 | BINARY CODE A0 N |
| 06 | BINARY CODE A1 C |
| 19 | BINARY CODE A1 N |
| 07 | BINARY CODE A2 C |
| 20 | BINARY CODE A2 N |

[B] P1(A31J2), 4/104W407

| PIN NO. | SIGNAL NAME |
|---|---|
| 08 | TST BIT 0 N |
| 21 | TST BIT 0 C |
| 07 | TST BIT 1 N |
| 20 | TST BIT 1 C |
| 06 | TST BIT 2 N |
| 19 | TST BIT 2 C |
| 05 | TST BIT 3 N |
| 18 | TST BIT 3 C |
| 04 | TST BIT 4 N |
| 17 | TST BIT 4 C |
| 03 | TST BIT 5 N |
| 16 | TST BIT 5 C |
| 02 | TST BIT 6 N |
| 15 | TST BIT 6 C |
| 01 | TST BIT 7 N |
| 14 | TST BIT 7 C |

[C] P2(A32J2), 4/104W407

| PIN NO. | SIGNAL NAME |
|---|---|
| 13 | TST BIT 0 N |
| 25 | TST BIT 0 C |
| 12 | TST BIT 1 N |
| 24 | TST BIT 1 C |
| 11 | TST BIT 2 N |
| 23 | TST BIT 2 C |
| 10 | TST BIT 3 N |
| 22 | TST BIT 3 C |
| 09 | TST BIT 4 N |
| 21 | TST BIT 4 C |
| 08 | TST BIT 5 N |
| 20 | TST BIT 5 C |
| 07 | TST BIT 6 N |
| 19 | TST BIT 6 C |
| 06 | TST BIT 7 N |
| 18 | TST BIT 7 C |

[D] VIDEO TEST SAMPLES SELECTION RELAY TRUTH TABLE

| J1 INPUT SIGNAL VIDEO TEST SAMPLE SELECTION DATA | PIN NO. | RELAY CONDITION* ALL OFF | K1 ENTR | K2 ENTR | K3 ENTR | K4 ENTR | K5 ENTR | K6 ENTR |
|---|---|---|---|---|---|---|---|---|
| BINARY CODE A 0 N | 05 | 0 | 1 | 0 | 1 | 0 | 1 | 0 |
| BINARY CODE A 0 C | 18 | 1 | 0 | 1 | 0 | 1 | 0 | 1 |
| BINARY CODE A 1 N | 06 | 0 | 0 | 1 | 1 | 0 | 0 | 1 |
| BINARY CODE A 1 C | 19 | 1 | 1 | 0 | 0 | 1 | 1 | 0 |
| BINARY CODE A 2 N | 07 | 0 | 0 | 0 | 0 | 1 | 1 | 1 |
| BINARY CODE A 2 C | 20 | 1 | 1 | 1 | 1 | 0 | 0 | 0 |

*ONLY ONE RELAY ENERGIZED AT A TIME

Figure FO5-9. RF Test Signal Processing, Functional Flow Diagram (Sheet 4 of 4)

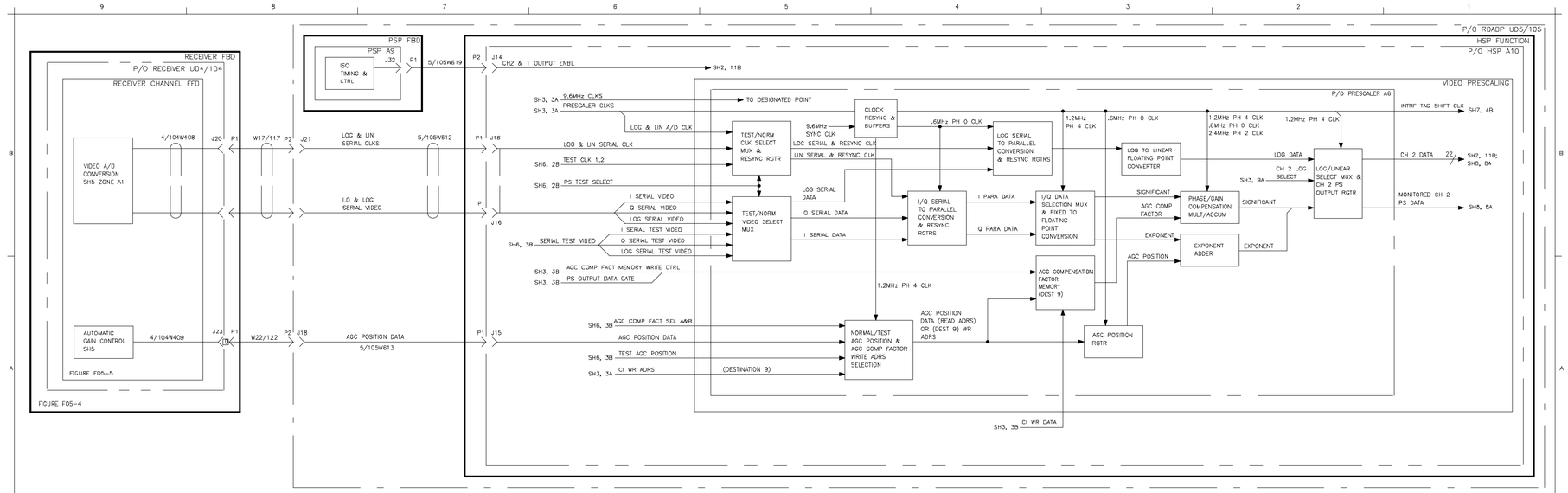


NX1897

Figure FO5-10. HSP (Video Prescaling), Functional Block Diagram
(Sheet 1 of 8)

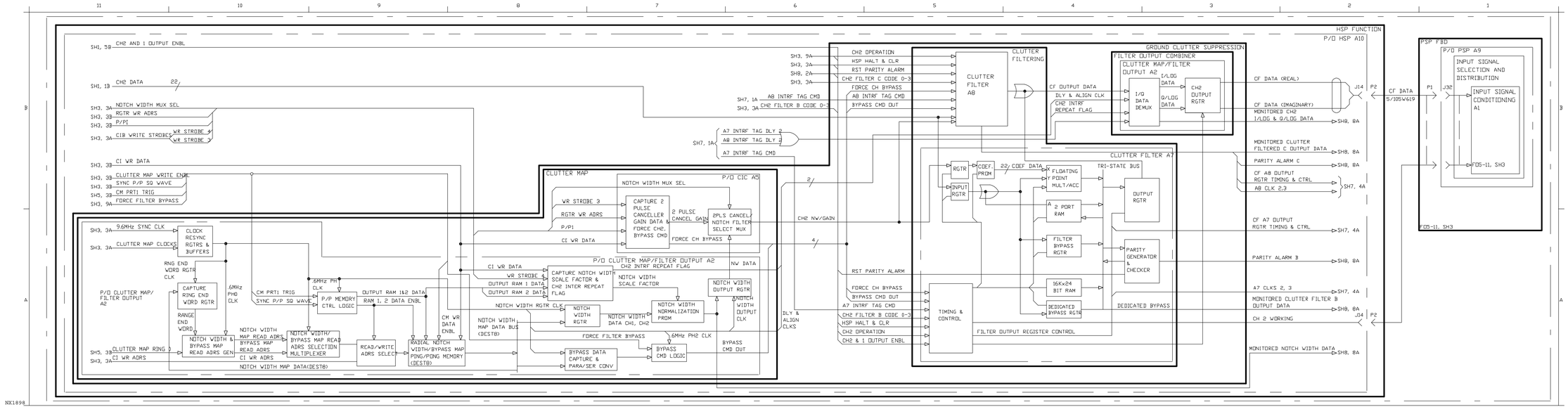


Figure FO5-10. HSP (Ground Clutter Suppression), Functional Block Diagram (Sheet 2 of 8)

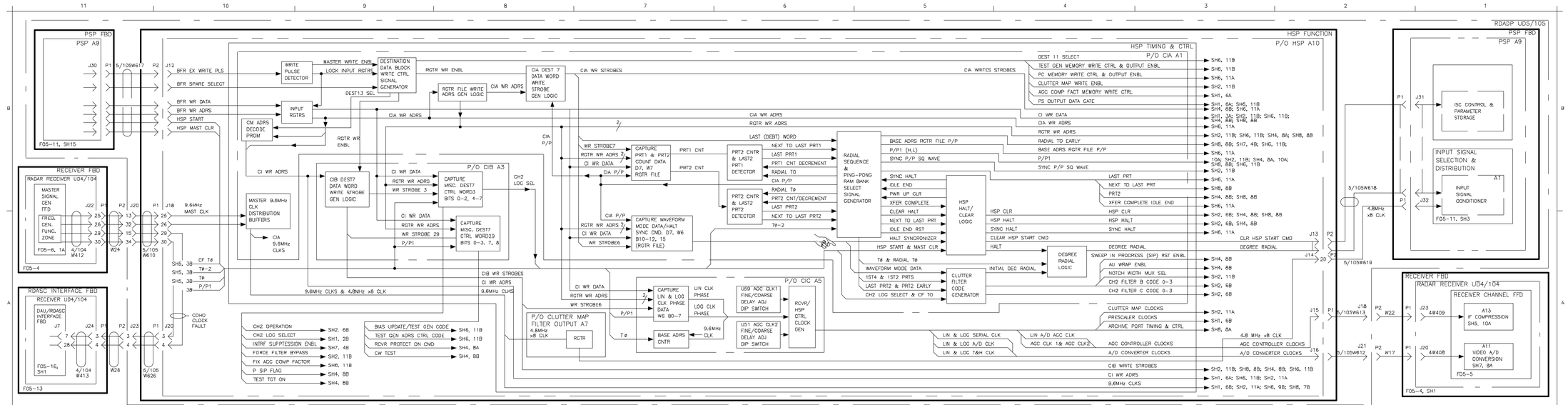


NX1899

Figure FO5-10. HSP (Timing and Control), Functional Block Diagram (Sheet 3 of 8)

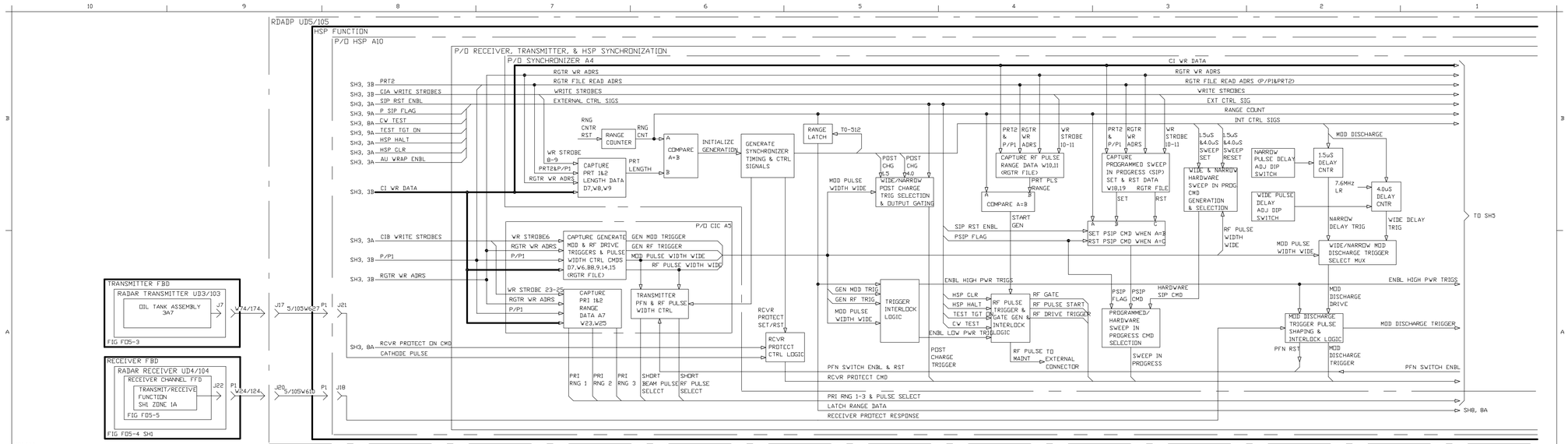


Figure FO5-10. HSP (Transmitter, Receiver and HSP Synchronization), Functional Block Diagram (Sheet 4 of 8)

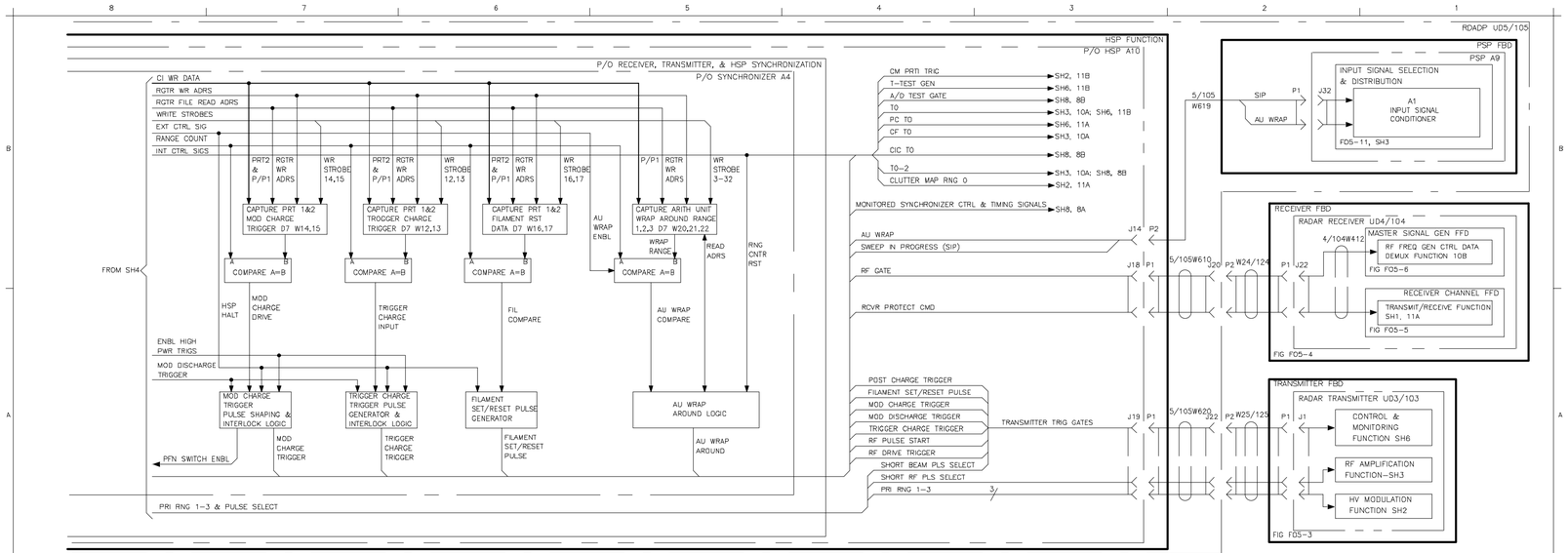


NX1901

Figure FO5-10. HSP (Transmitter, Receiver and HSP Synchronization), Functional Block Diagram (Sheet 5 of 8)

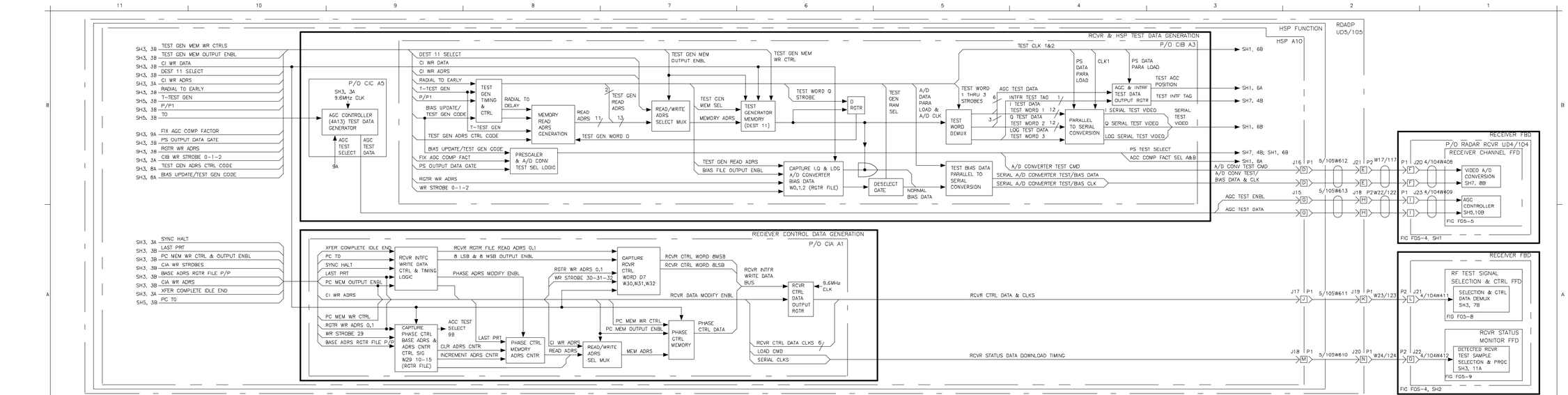


Figure FO5-10. HSP, Functional Block Diagram (Sheet 6 of 8)

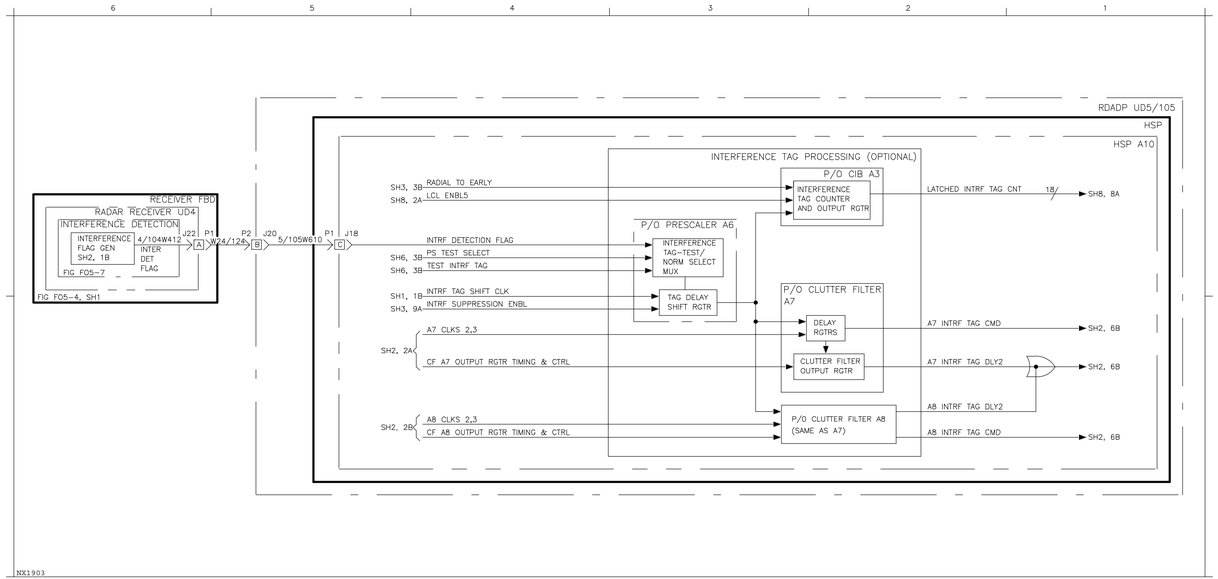


Figure FO5-10. HSP (Interference Tag Processing), Functional Block Diagram (Sheet 7 of 8)

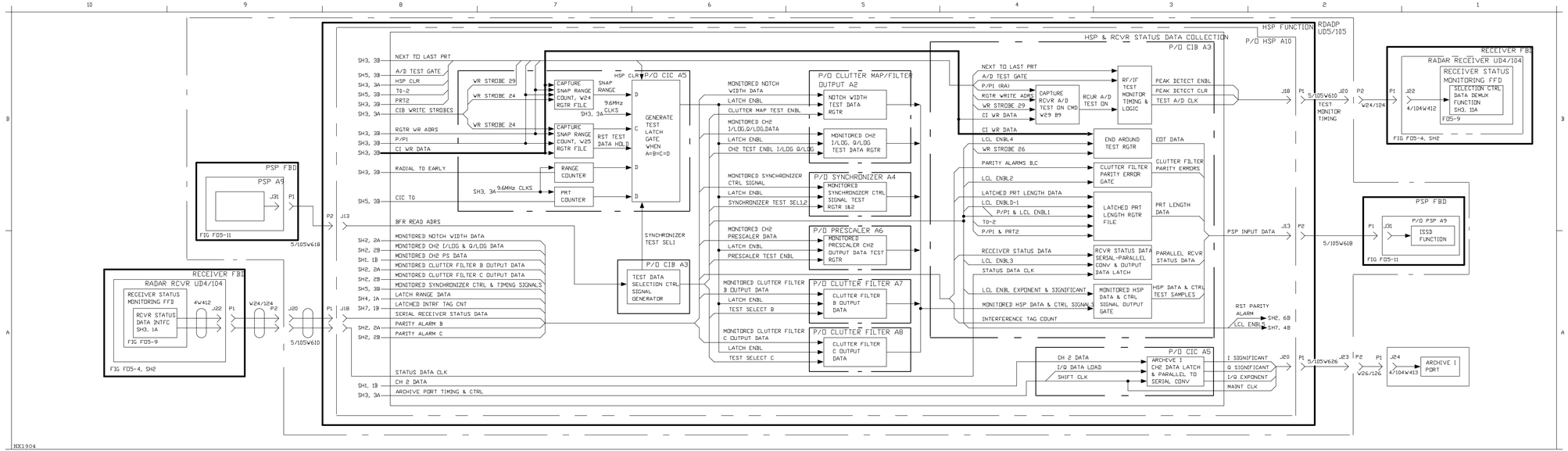


Figure FO5-10. HSP (HSP and Receiver Status Data Collection), Functional Block Diagram (Sheet 8 of 8)

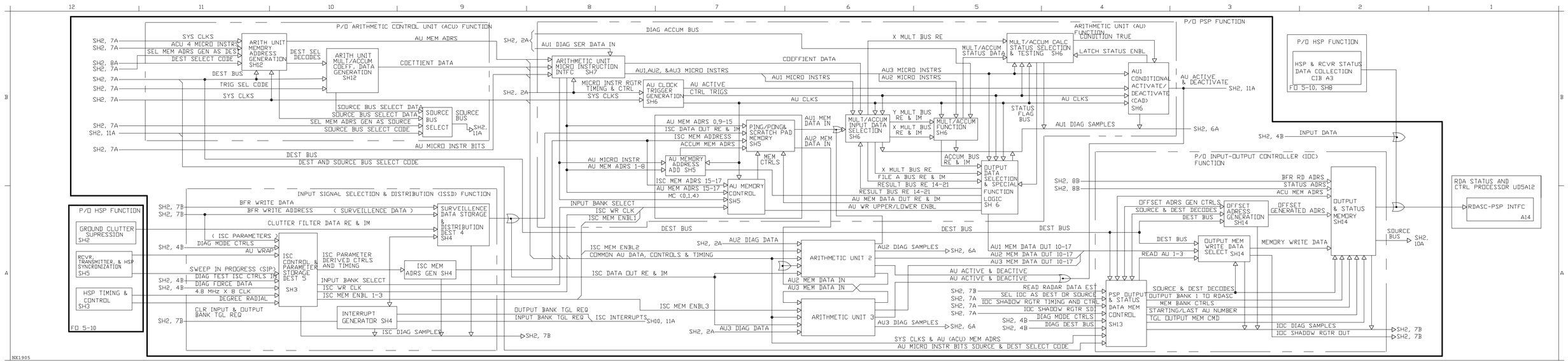


Figure FO5-11. PSP (Overview) Block Diagram
(Sheet 1 of 21)

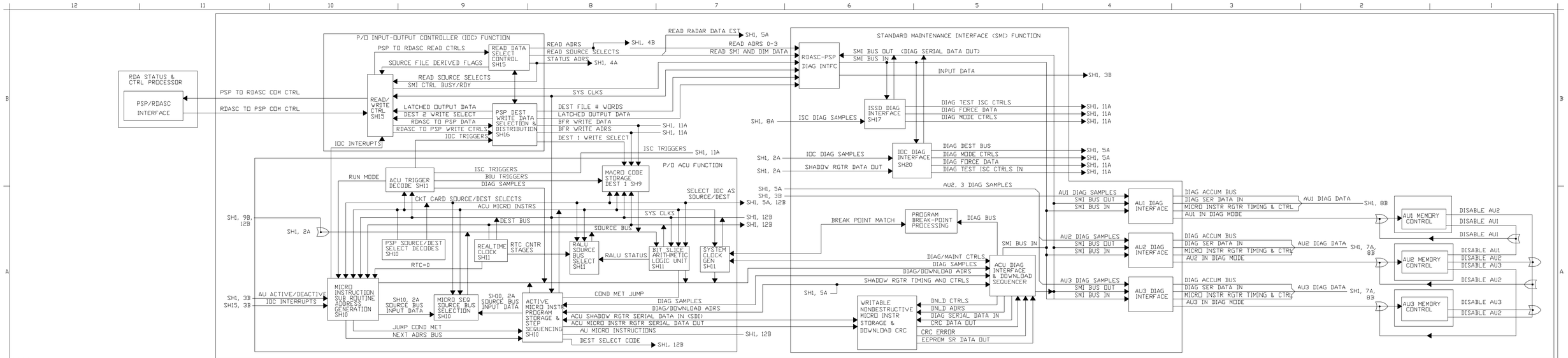


Figure FO5-11. PSP (Overview) Block Diagram
(Sheet 2 of 21)

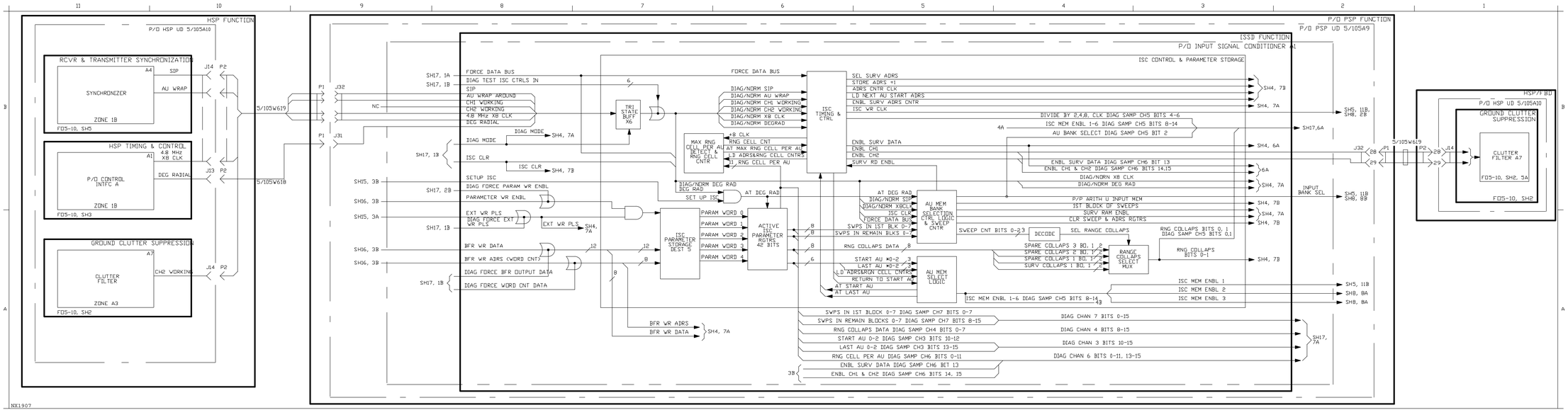


Figure FO5-11. PSP (ISSD Function) Functional Block Diagram (Sheet 3 of 21)

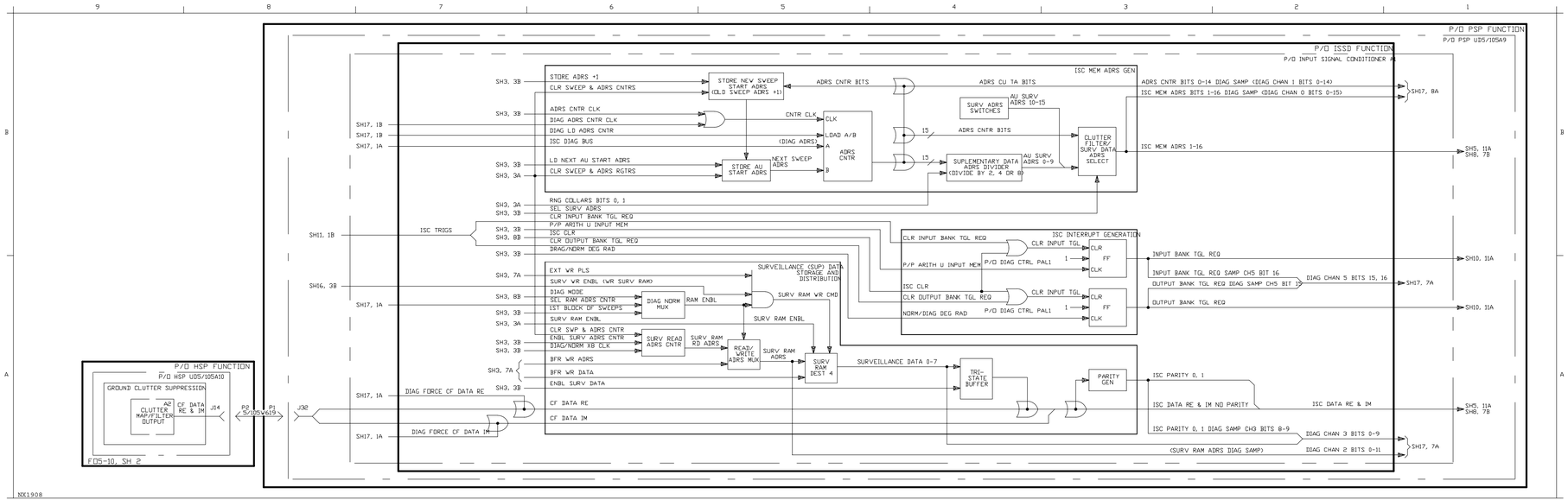


Figure FO5-11. PSP (ISSD Function) Functional Block Diagram (Sheet 4 of 21)

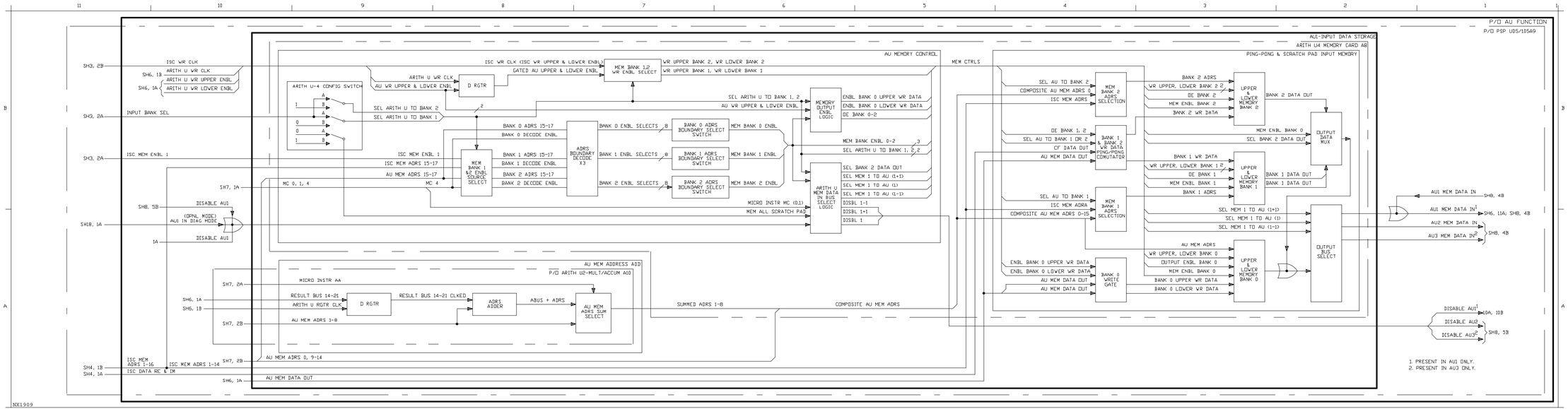


Figure FO5-11. PSP (AU Function) Functional Block Diagram (Sheet 5 of 21)

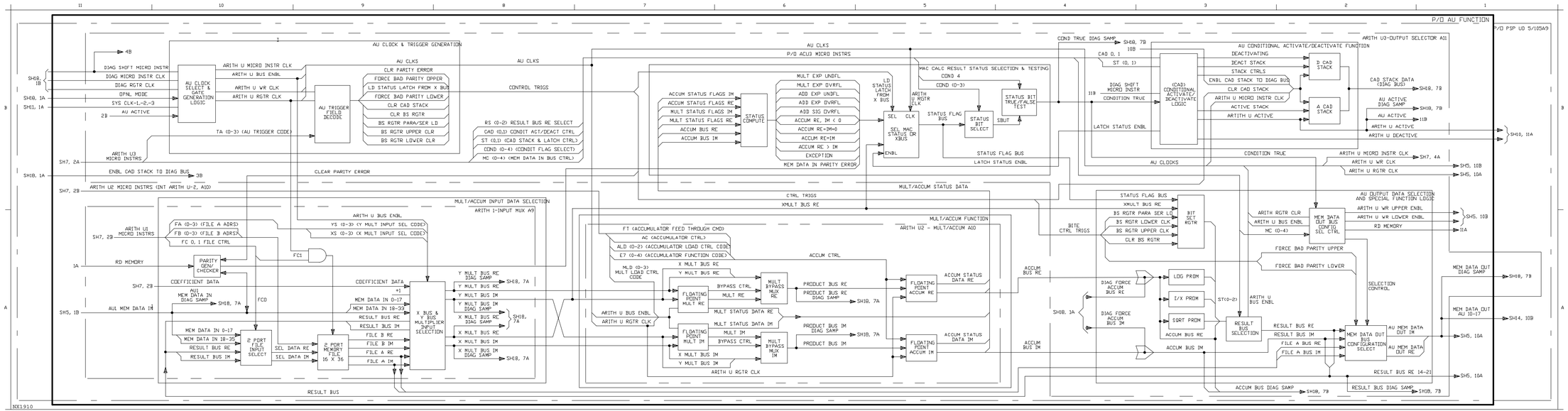


Figure FO5-11. PSP (AU Function) Functional Block Diagram (Sheet 6 of 21)

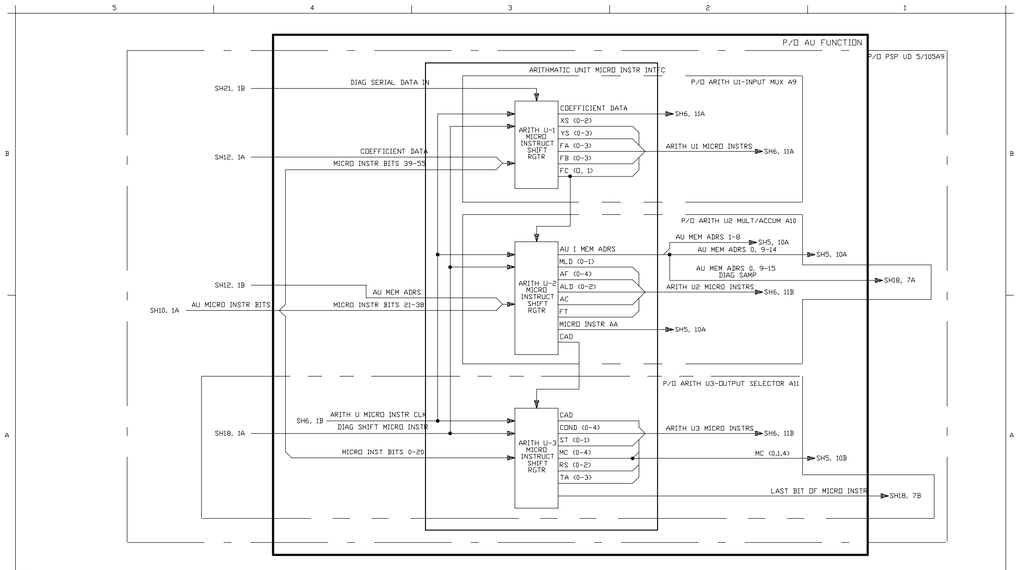


Figure FO5-11. PSP (AU Function) Functional Block Diagram
(Sheet 7 of 21)

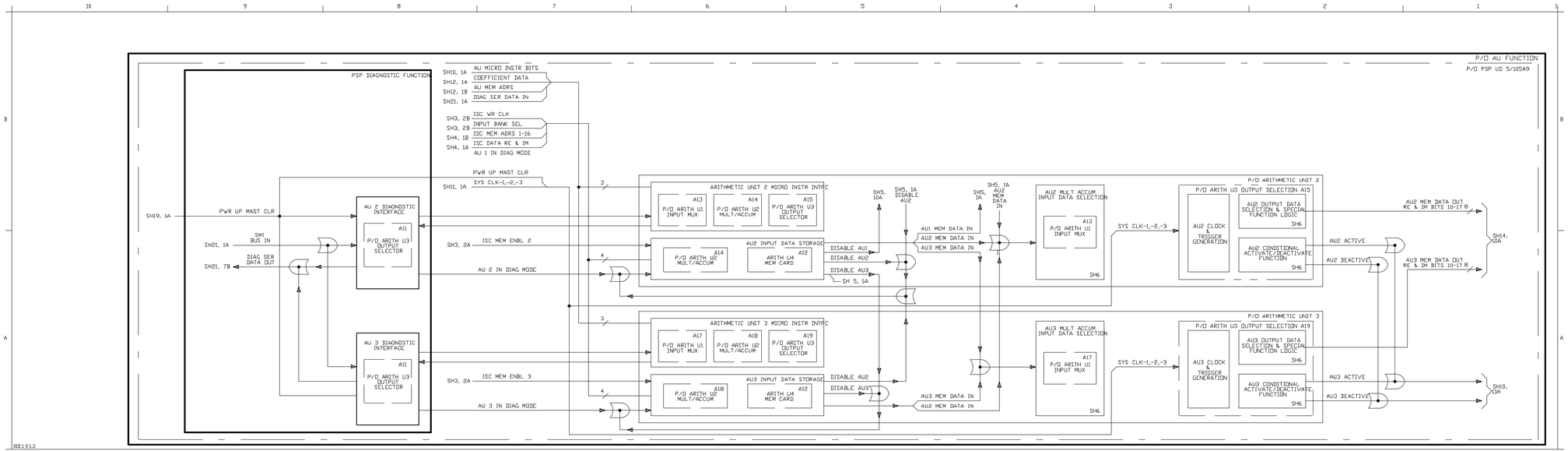


Figure FO5-11. PSP (AU Function) Functional Block Diagram (Sheet 8 of 21)

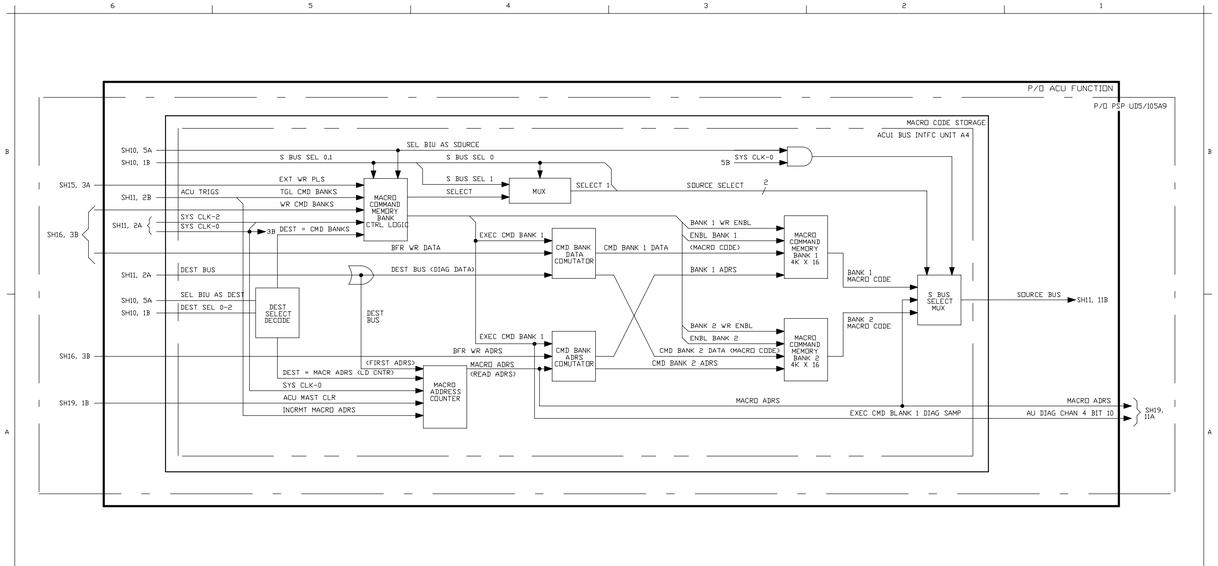


Figure FO5-11. PSP (ACU Function) Functional Block Diagram
(Sheet 9 of 21)

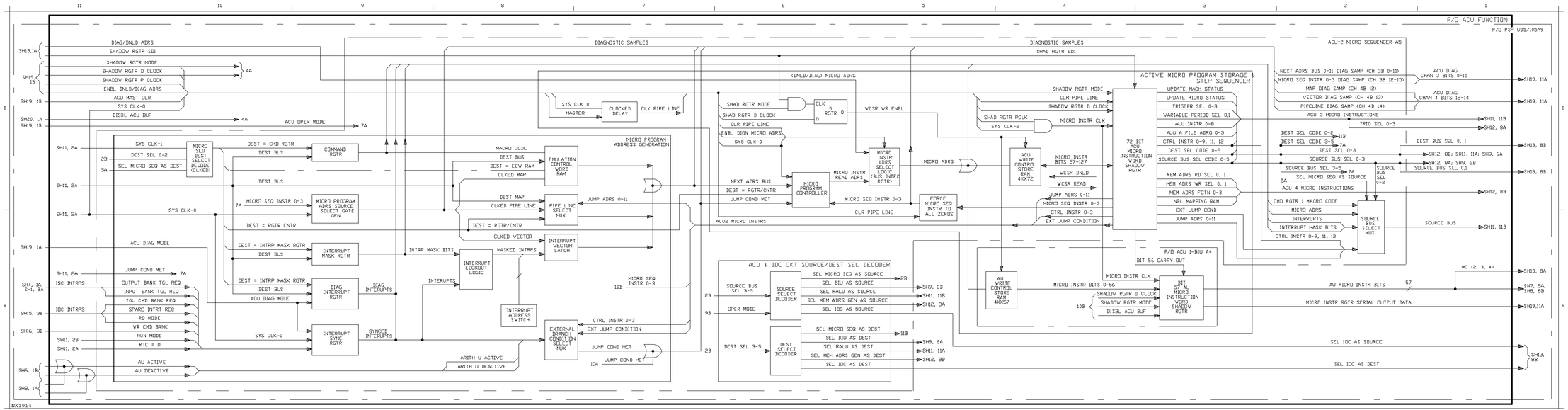


Figure FO5-11. PSP (ACU Function) Functional Block Diagram
(Sheet 10 of 21)

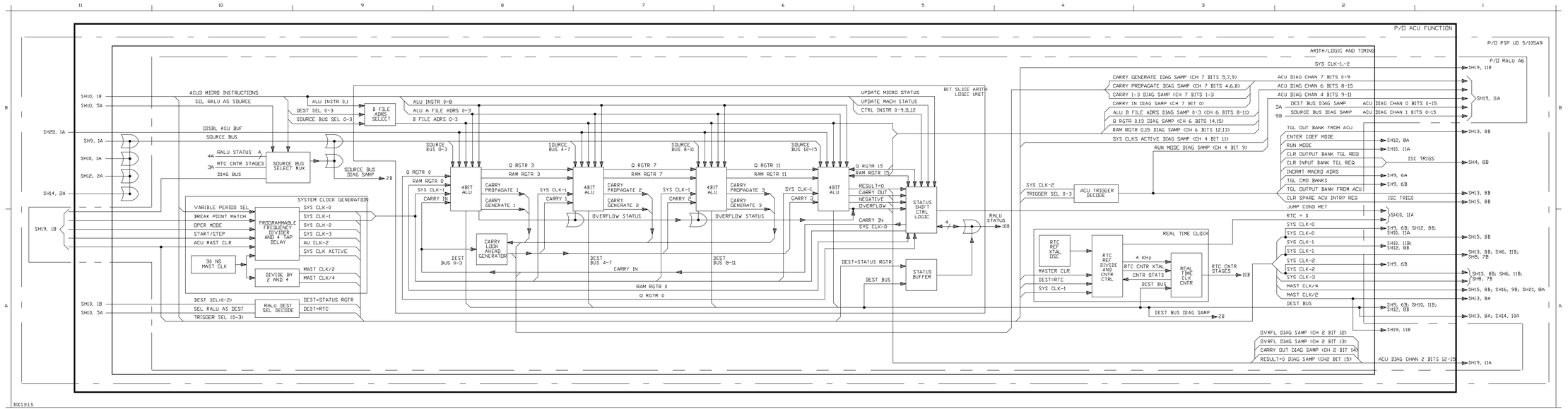


Figure FO5-11. PSP (ACU Function) Functional Block Diagram (Sheet 11 of 21)

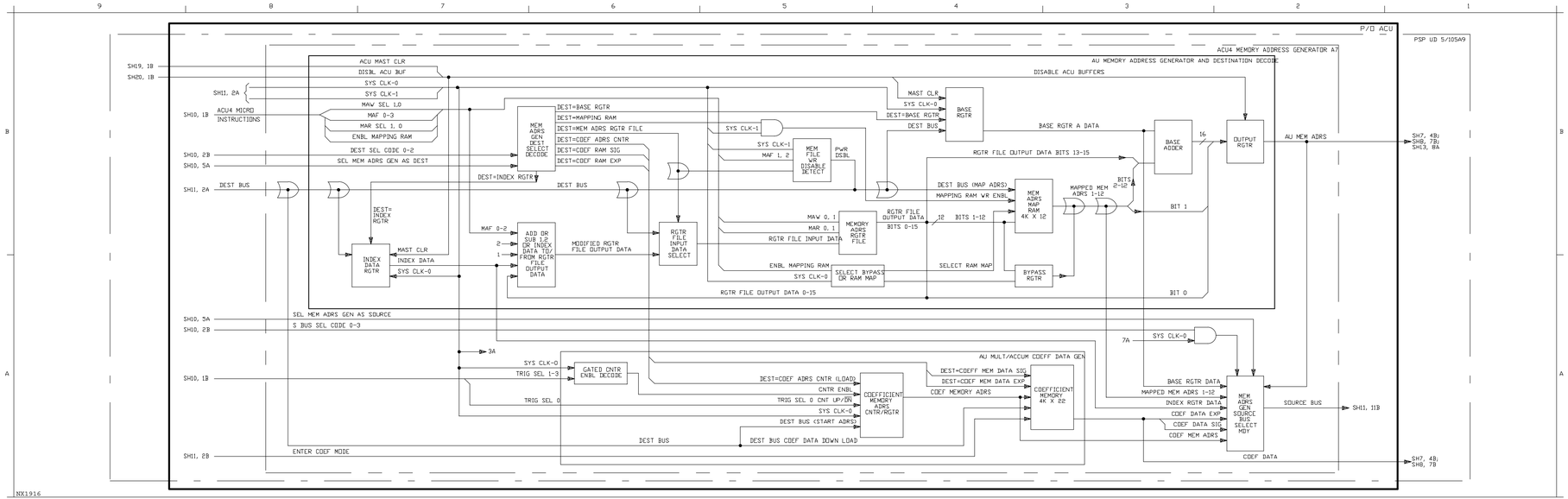


Figure FO5-11. PSP (ACU Function) Functional Block Diagram (Sheet 12 of 21)

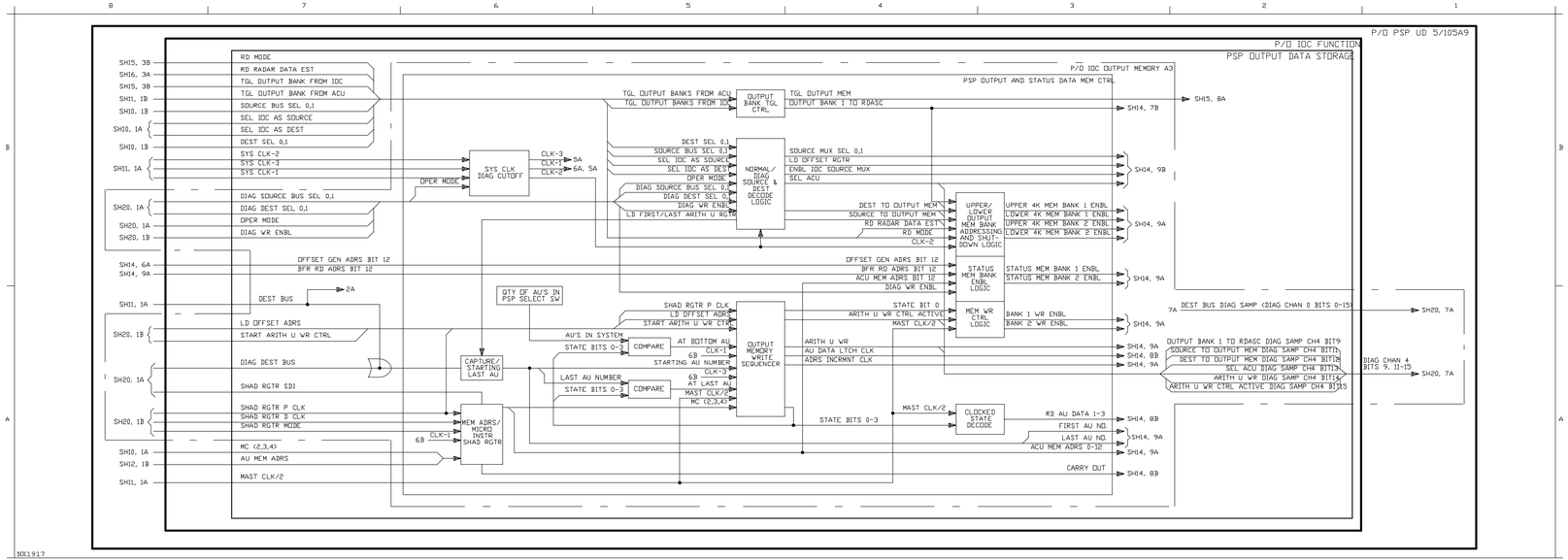


Figure FO5-11. PSP (IOC Function) Functional Block Diagram
(Sheet 13 of 21)

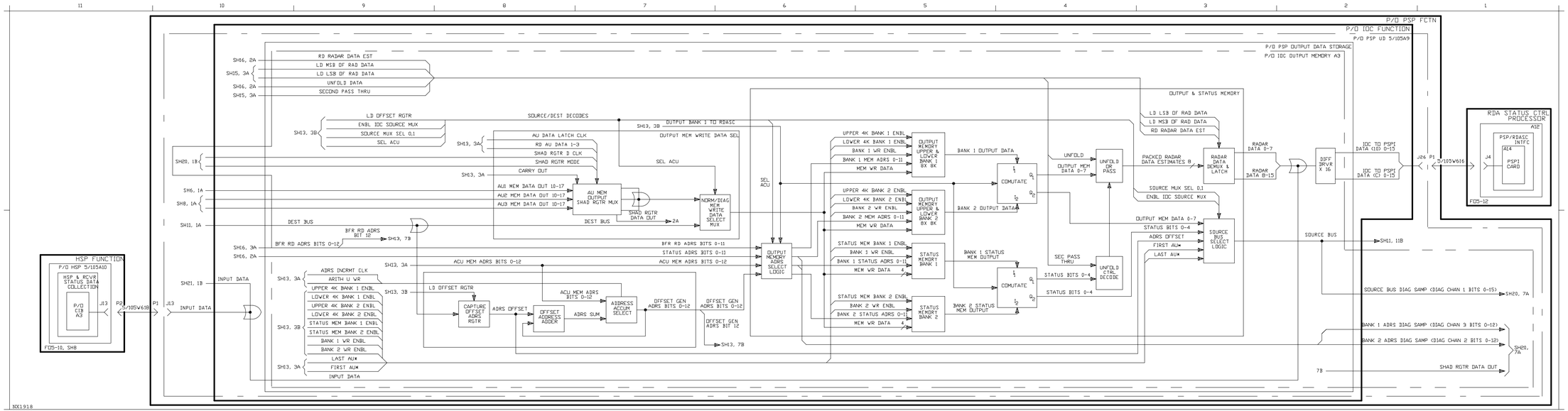


Figure FO5-11. PSP (IOC Function) Functional Block Diagram
(Sheet 14 of 21)

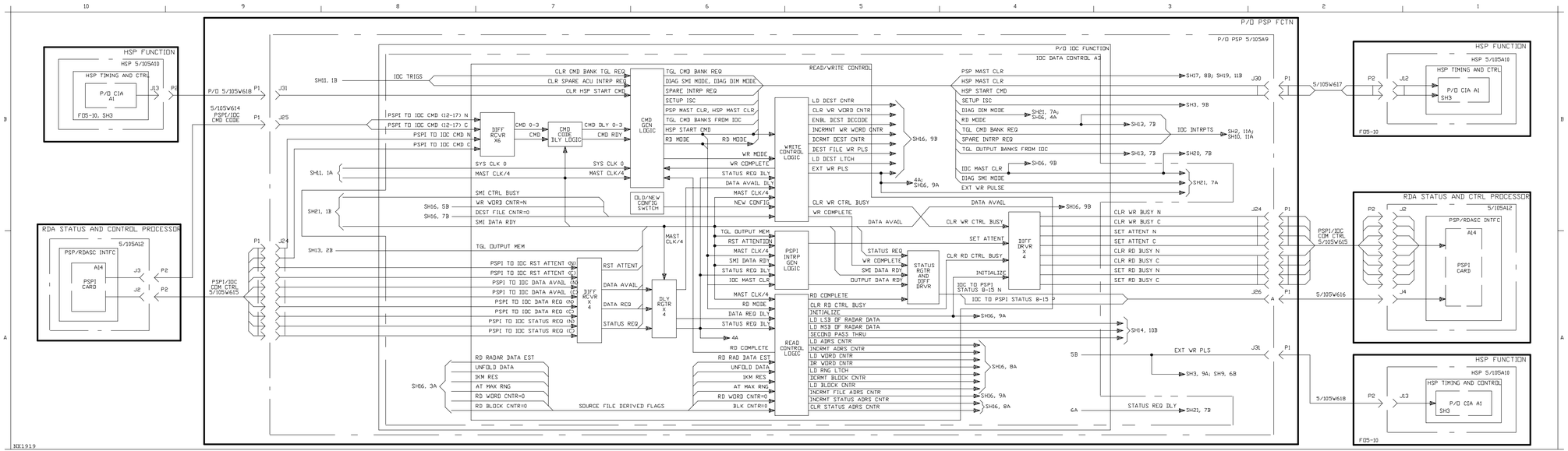


Figure FO5-11. PSP (IOC Function) Functional Block Diagram (Sheet 15 of 21)

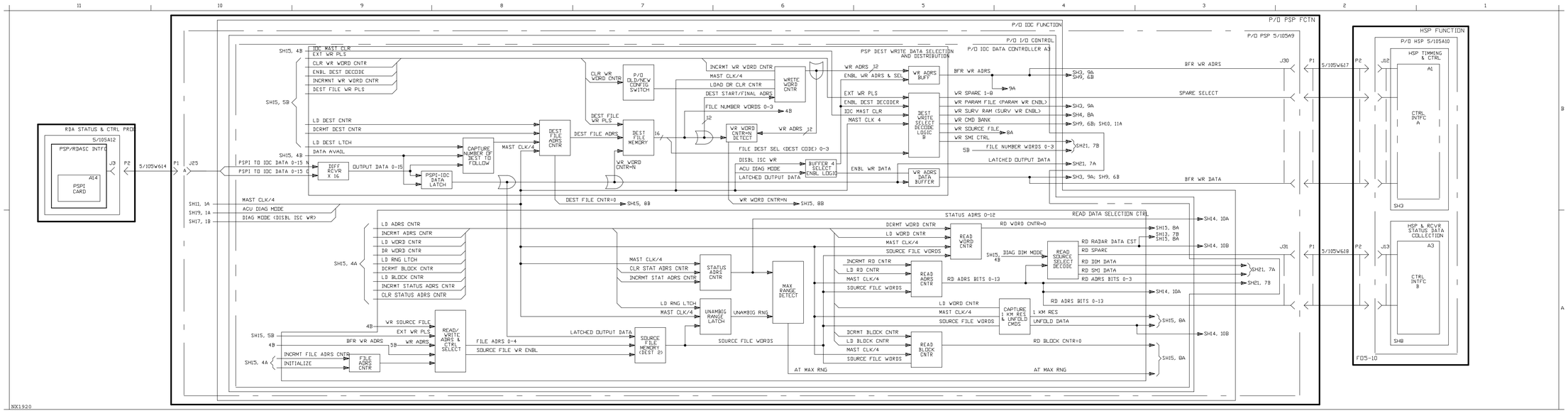


Figure FO5-11. PSP (IOC Function) Functional Block Diagram (Sheet 16 of 21)

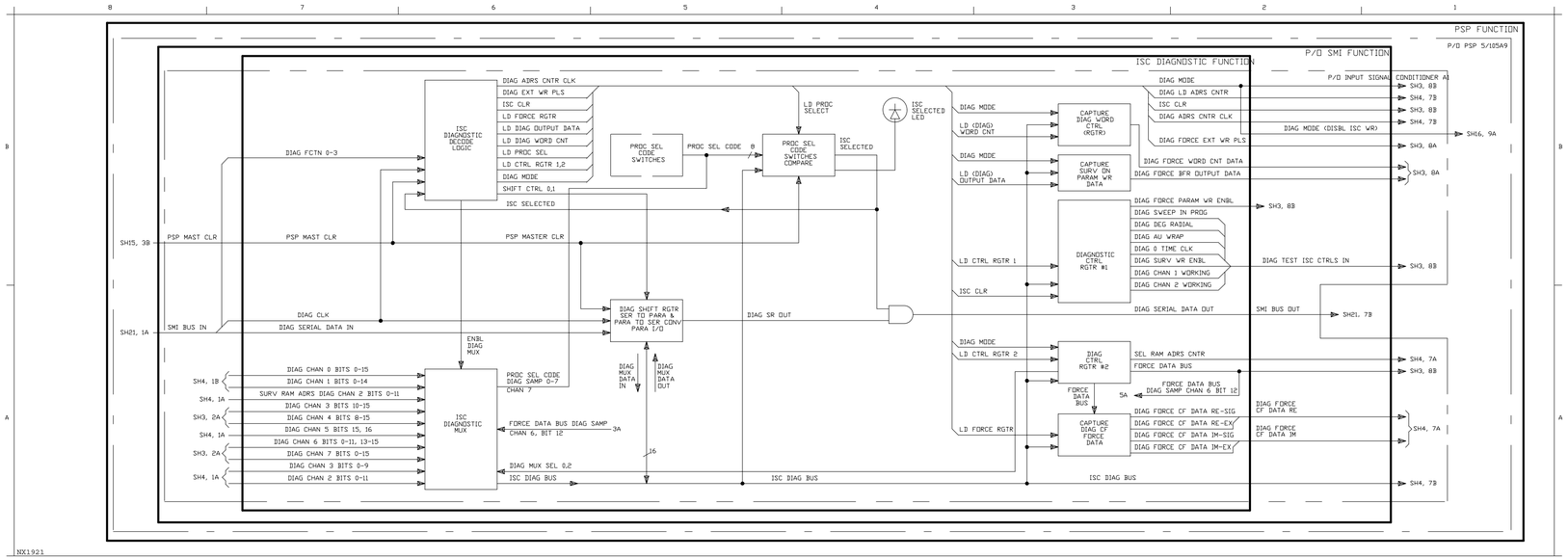


Figure FO5-11. PSP (SMI Function) Functional Block Diagram
(Sheet 17 of 21)

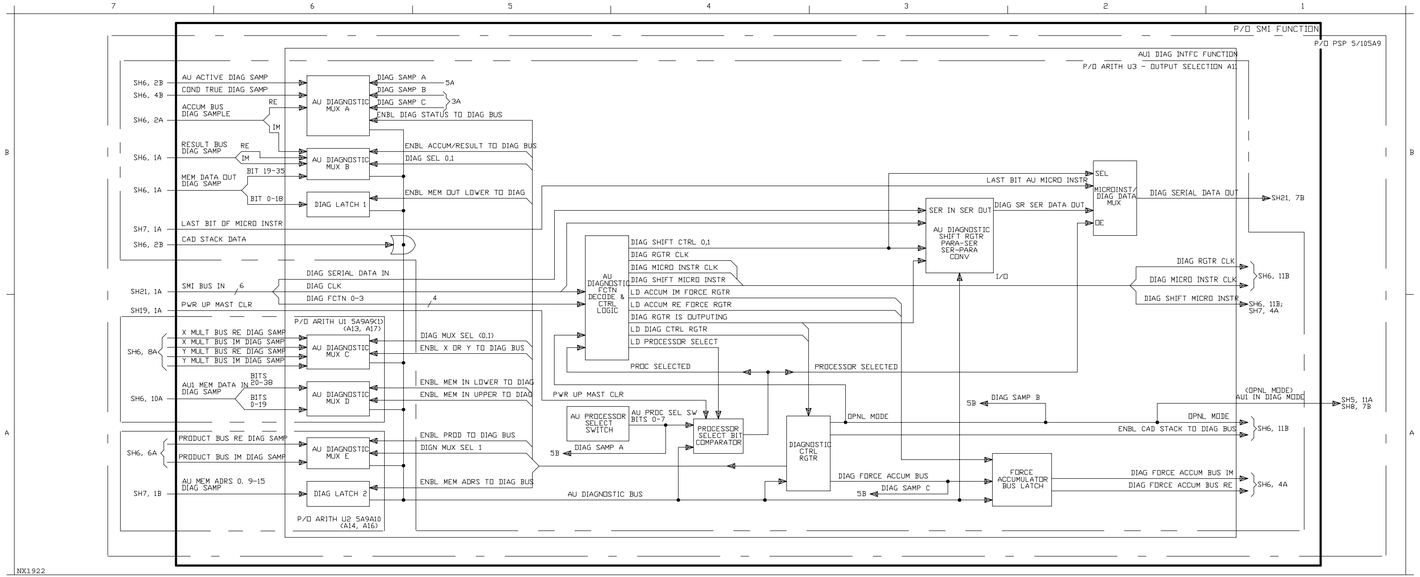


Figure FO5-11. PSP (SMI Function) Functional Block Diagram (Sheet 18 of 21)

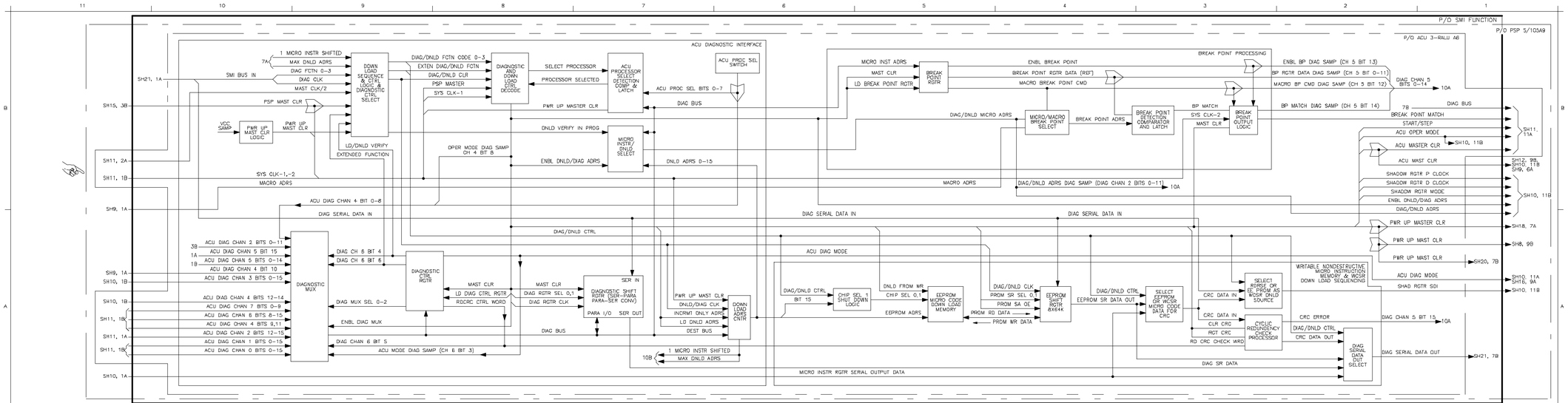


NX1923

Figure FO5-11. PSP (SMI Function) Functional Block Diagram
(Sheet 19 of 21)

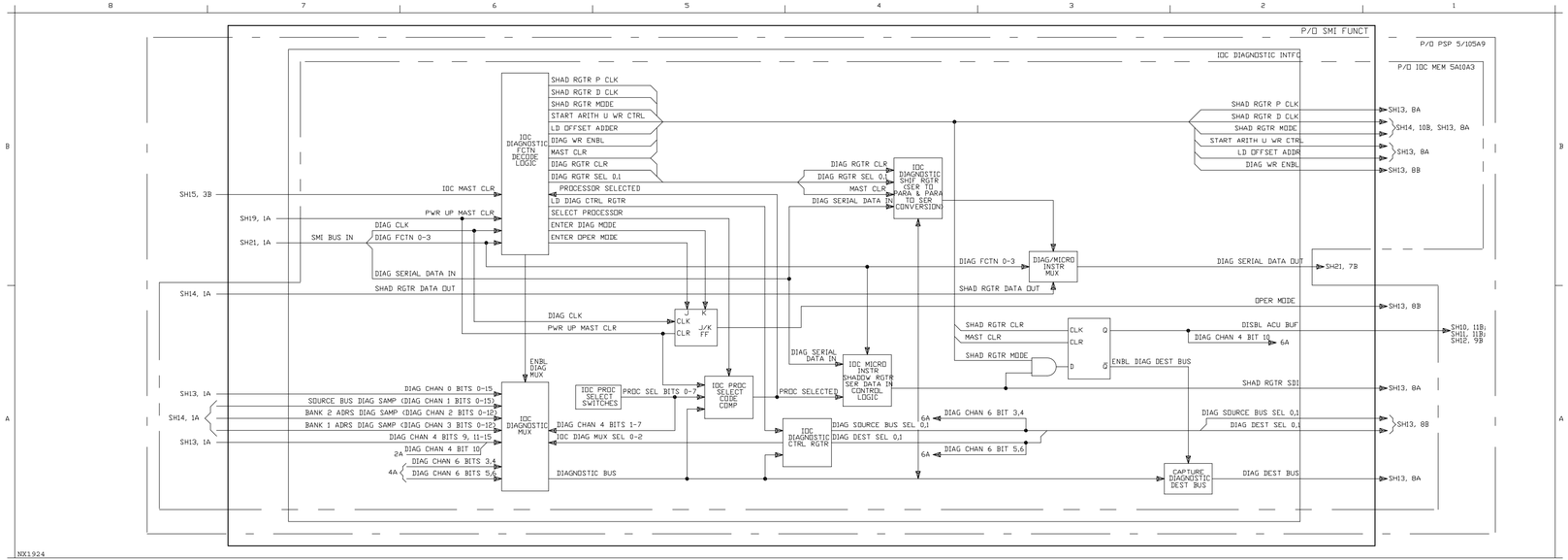


Figure FO5-11. PSP (SMI Function) Functional Block Diagram (Sheet 20 of 21)

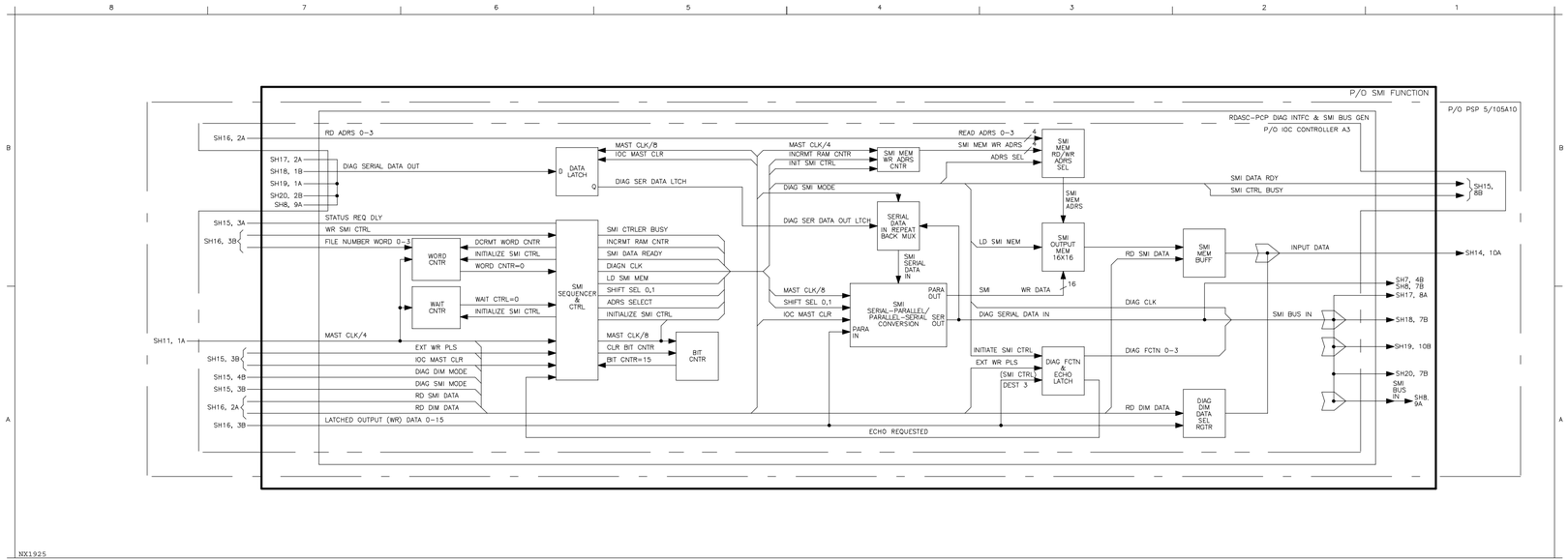


Figure FO5-11. PSP (SMI Function) Functional Block Diagram
(Sheet 21 of 21)

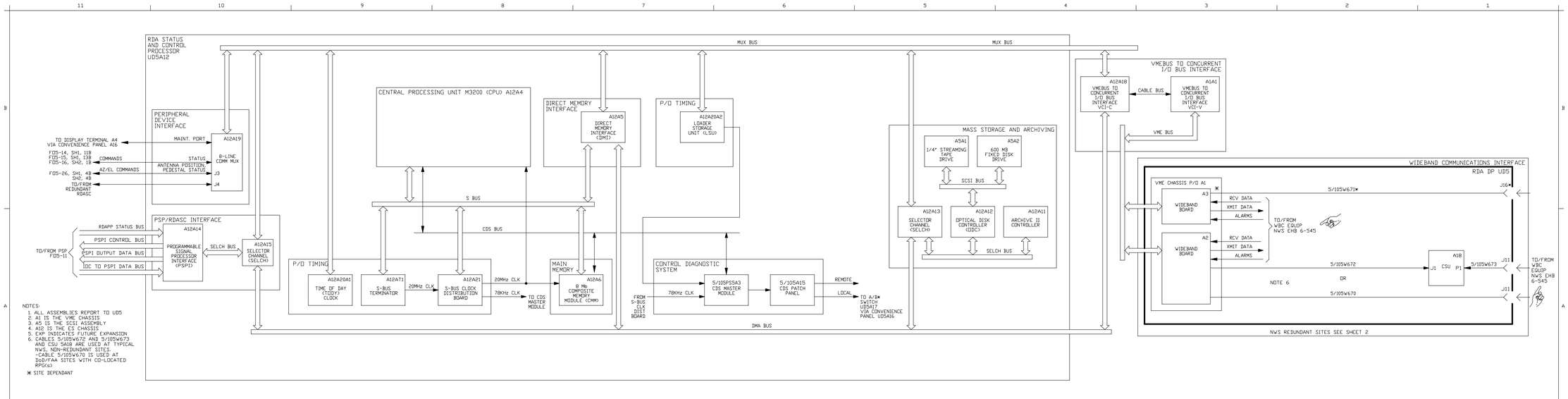


Figure FO5-12. RDA Status and Control Processor, Functional Block Diagram (Sheet 1 of 2)

**Change 1 FP-5-379/(FP-5-380 blank)**

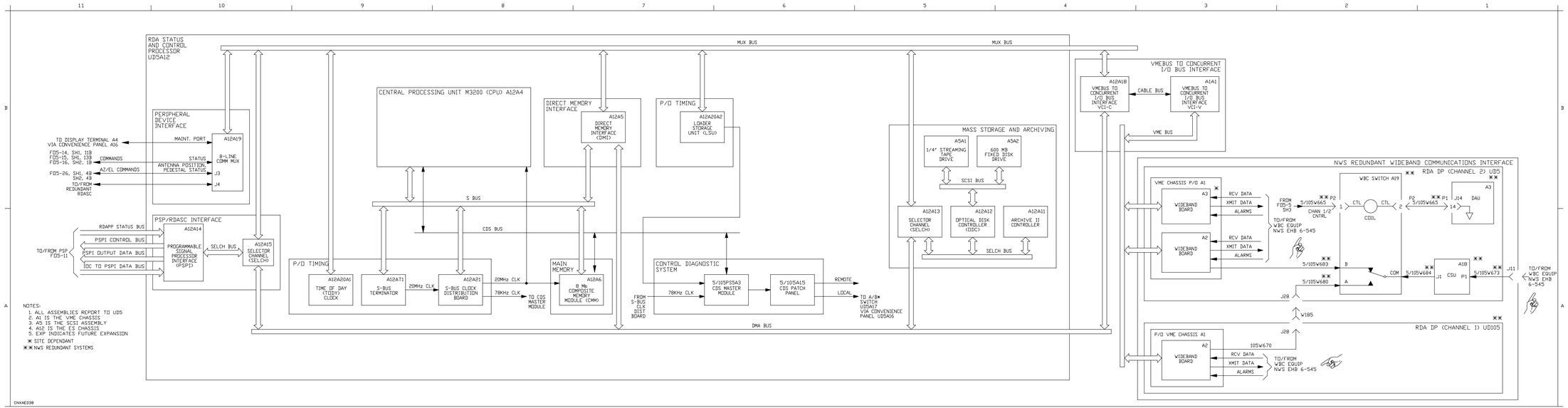


NX1927

Figure FO5-12. RDA Status and Control Processor, Functional Block Diagram (Sheet 2 of 2)

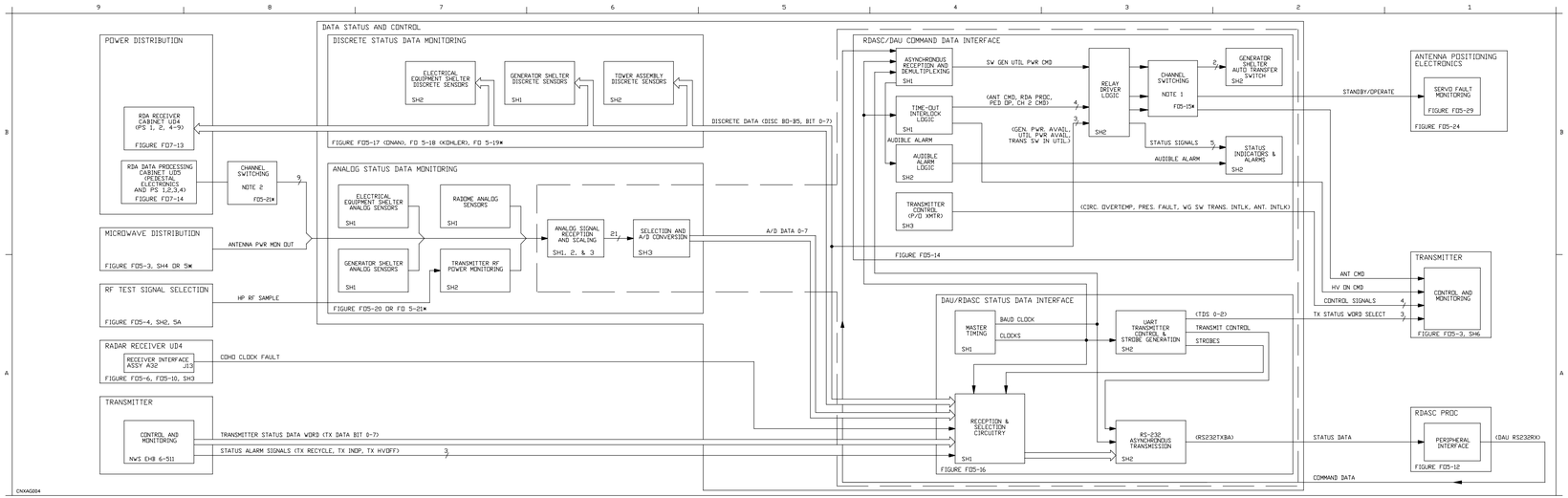


Figure FO5-13. RDA Status and Control Interface, Functional Block Diagram

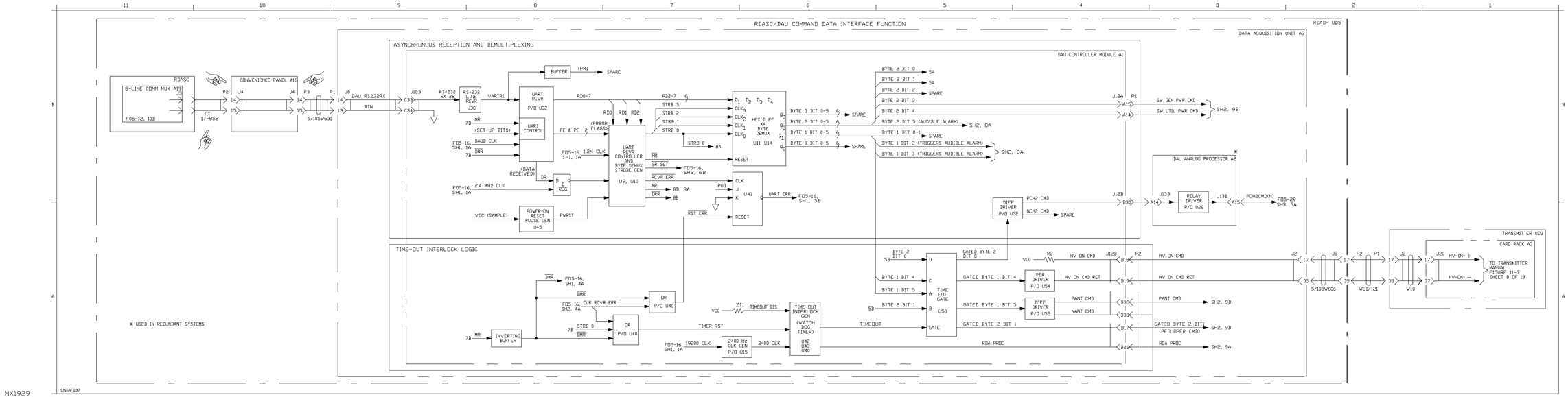


Figure FO5-14. RDASC/DAU Command Data Interface, Functional Flow Diagram (Sheet 1 of 3)

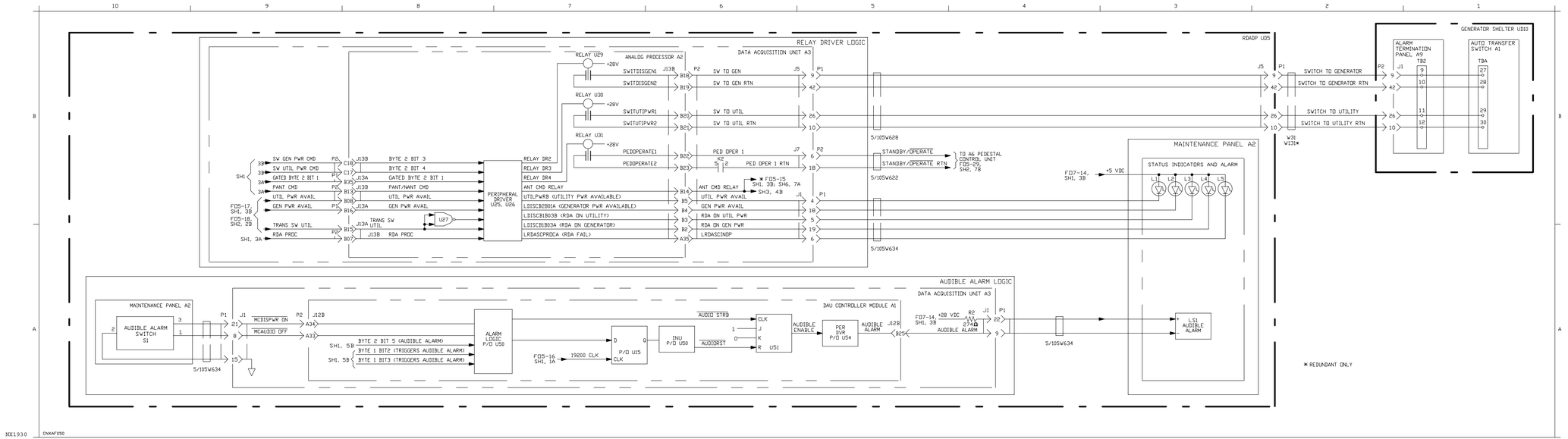


Figure FO5-14. RDASC/DAU Command Data Interface, Functional Flow Diagram (Sheet 2 of 3)

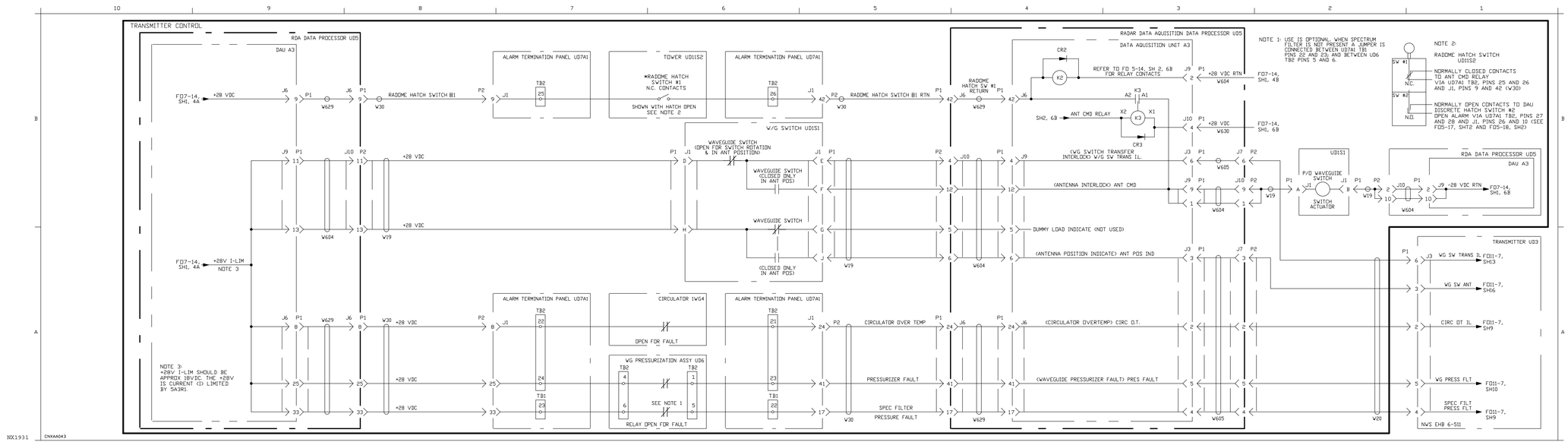


Figure FO5-14. RDASC/DAU Command Data Interface, Functional Flow Diagram (Sheet 3 of 3)

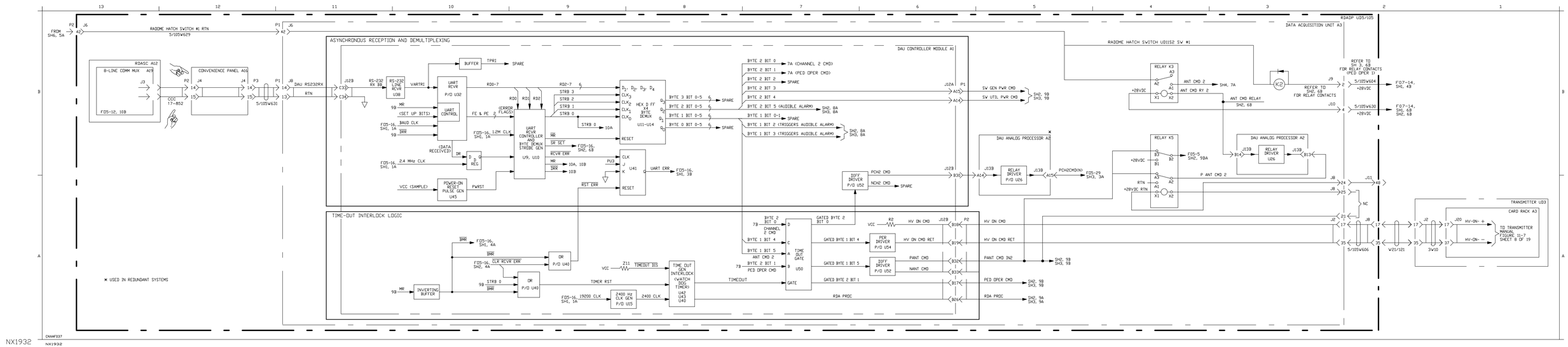


Figure FO5-15. Redundant RDASC/DAU Command Data Interface Functional Description (Sheet 1 of 6)

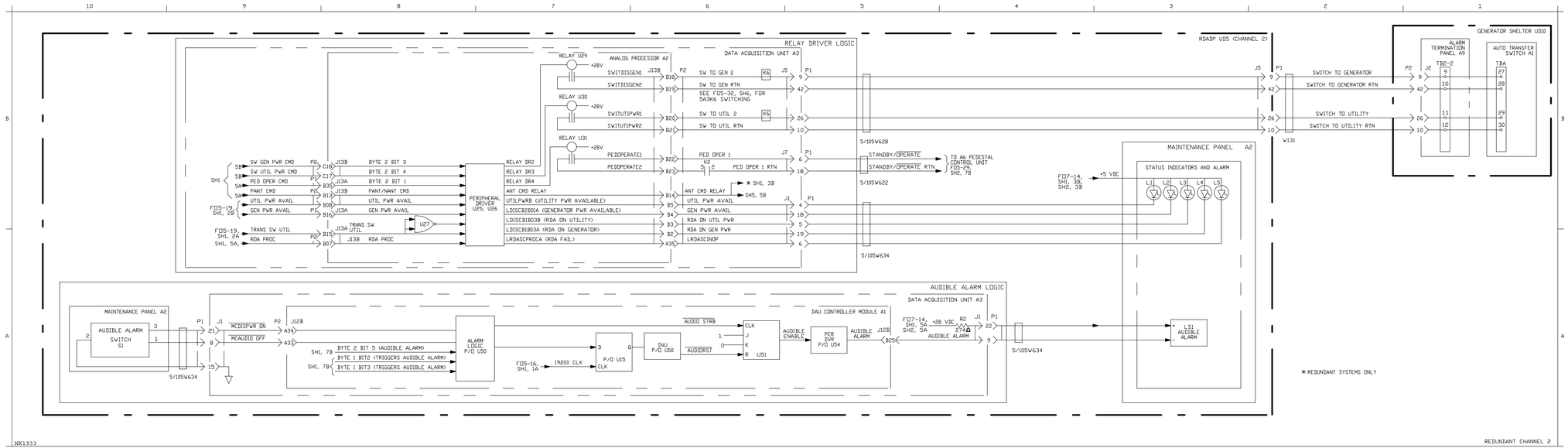


Figure FO5-15. Redundant RDASC/DAU Command Data Interface Functional Description (Sheet 2 of 6)

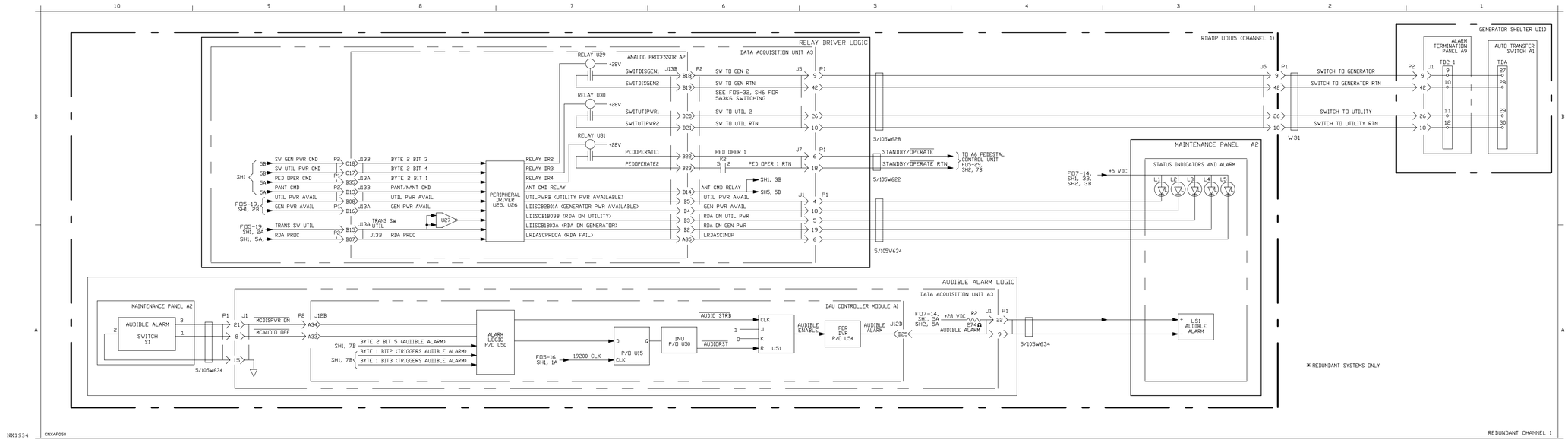


Figure FO5-15. Redundant RDASC/DAU Command Data Interface Functional Description (Sheet 3 of 6)

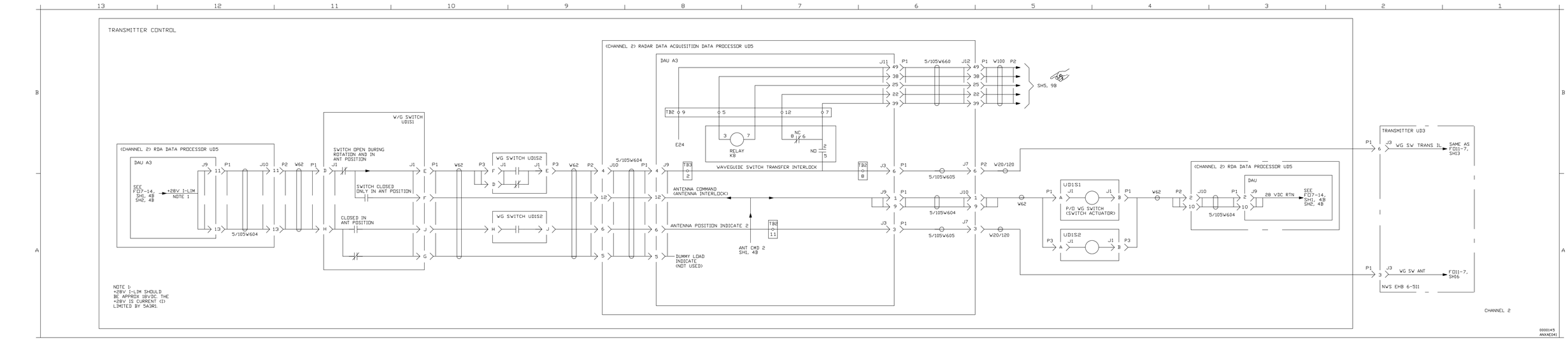


NX1935

Figure FO5-15. Redundant RDASC/DAU Command Data Interface Functional Description (Sheet 4 of 6)

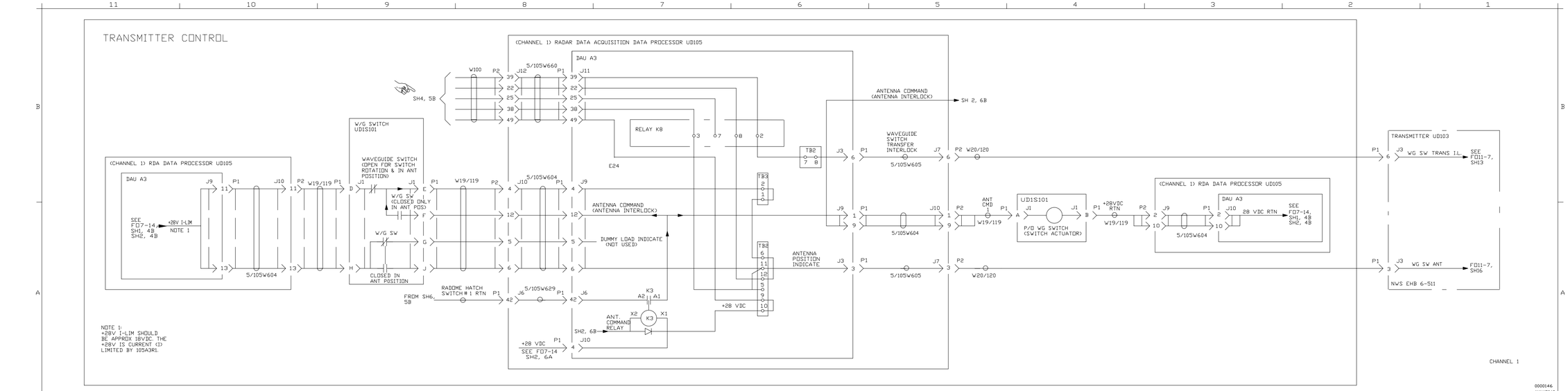


Figure FO5-15. Redundant RDASC/DAU Command Data Interface Functional Description (Sheet 5 of 6)

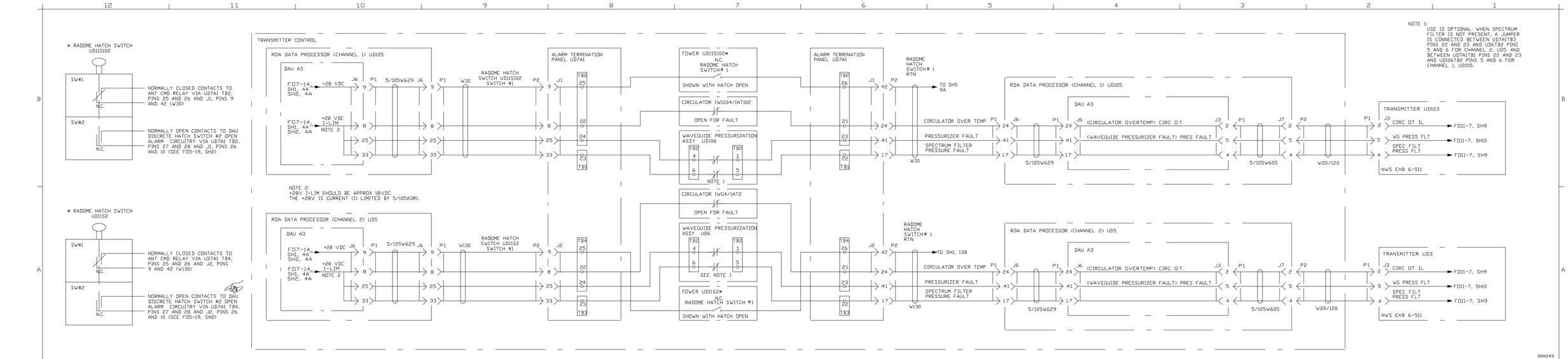


Figure FO5-15. Redundant RDASC/DAU Command Data Interface Functional Description (Sheet 6 of 6)

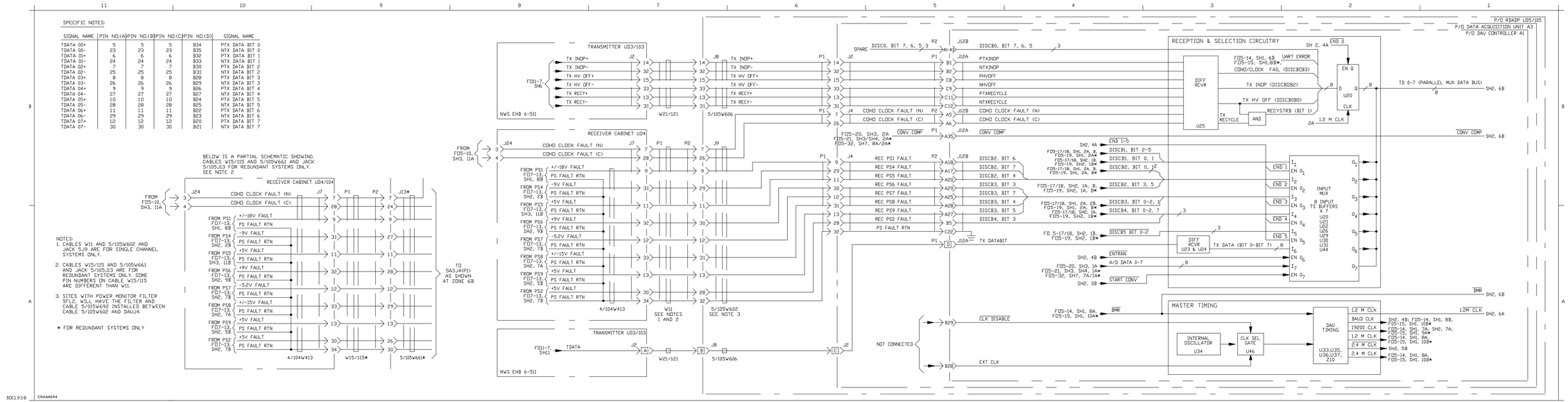


Figure FO5-16. DAU/RDASC Status Data Interface, Functional Flow Diagram (Sheet 1 of 2)

**Change 1 FP-5-403/(FP-5-404 blank)**

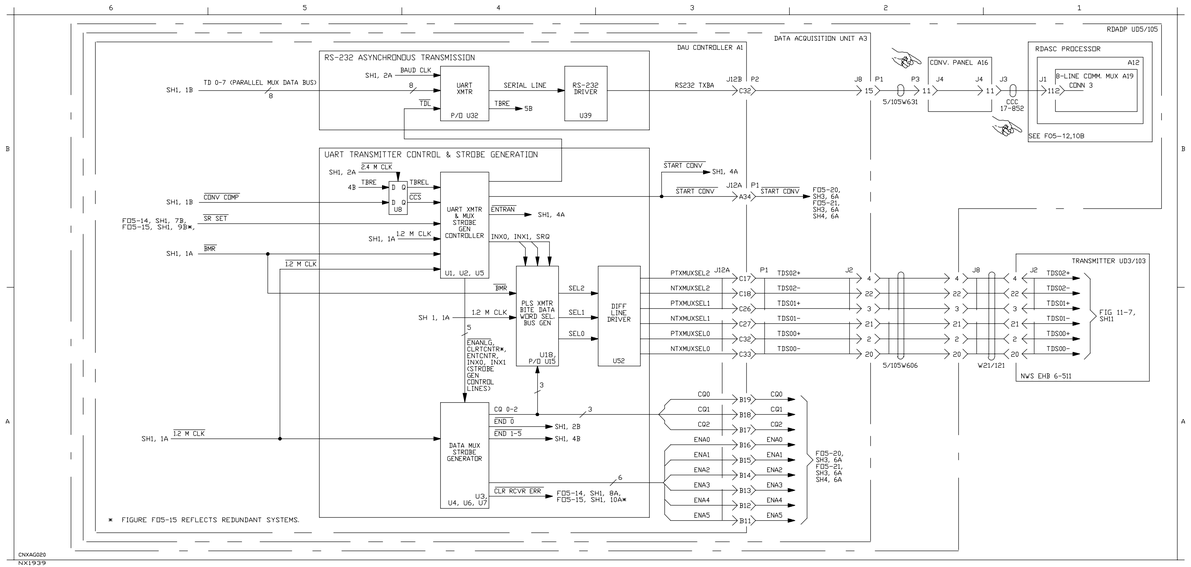


Figure FO5-16. DAU/RDASC Status Data Interface, Functional Flow Diagram (Sheet 2 of 2)

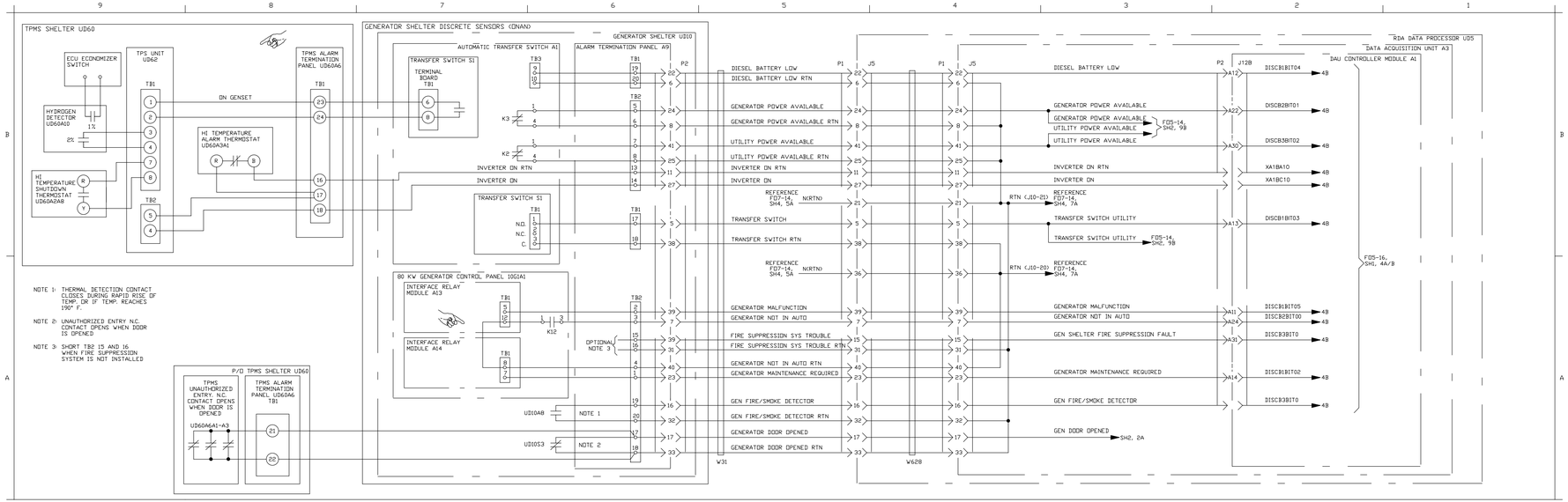


NX1940

Figure FO5-17. Discrete Status Data Monitoring Functional Flow Diagram (ONAN) (Sheet 1 of 2)

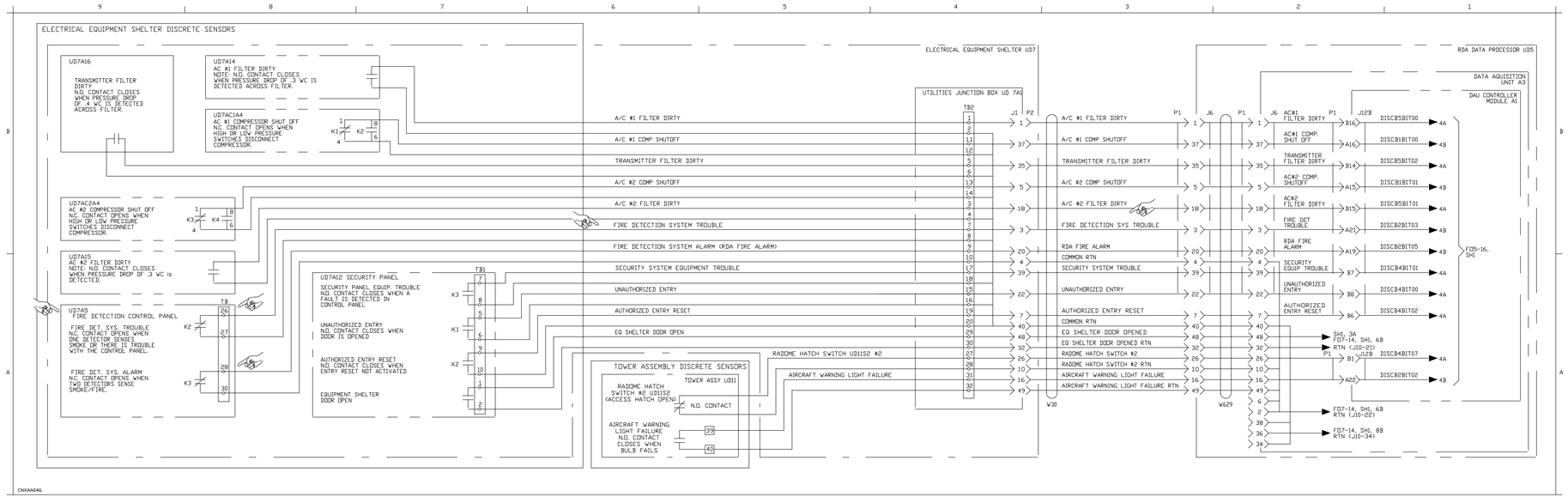


NX1941

Figure FO5-17. Discrete Status Data Monitoring Functional Flow Diagram (ONAN) (Sheet 2 of 2)

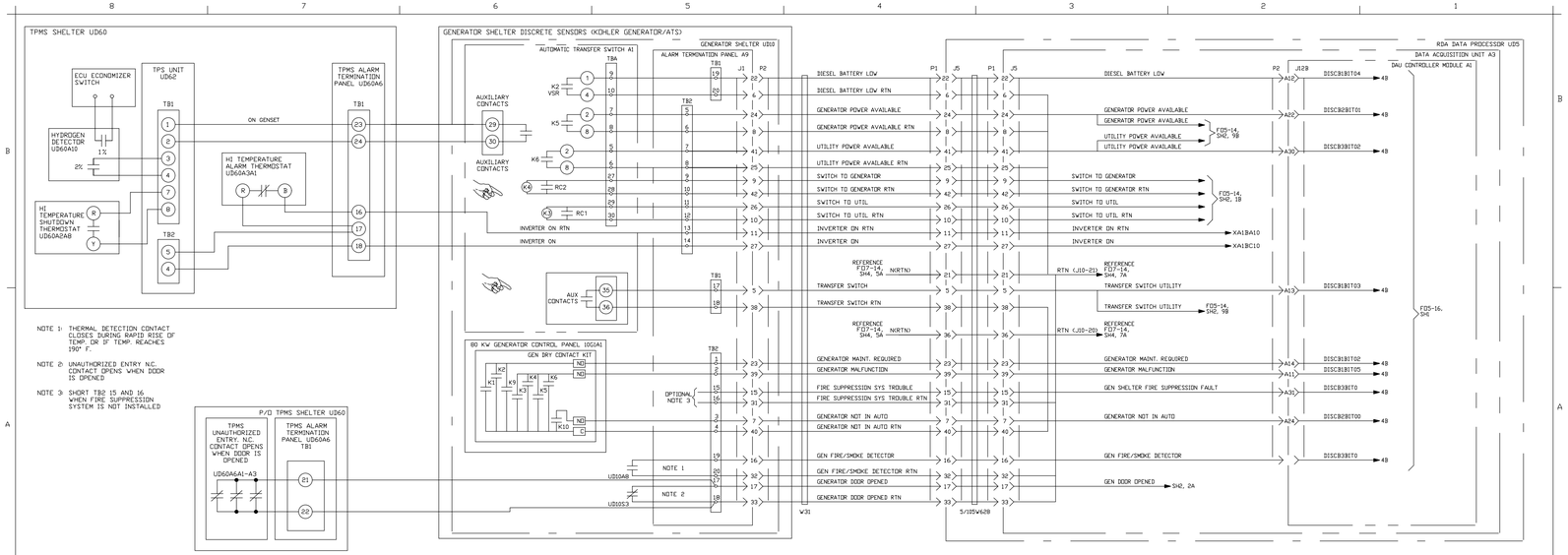


NX1942

Figure FO5-18. Discrete Status Data Monitoring Functional Flow Diagram (Kohler) (Sheet 1 of 2)

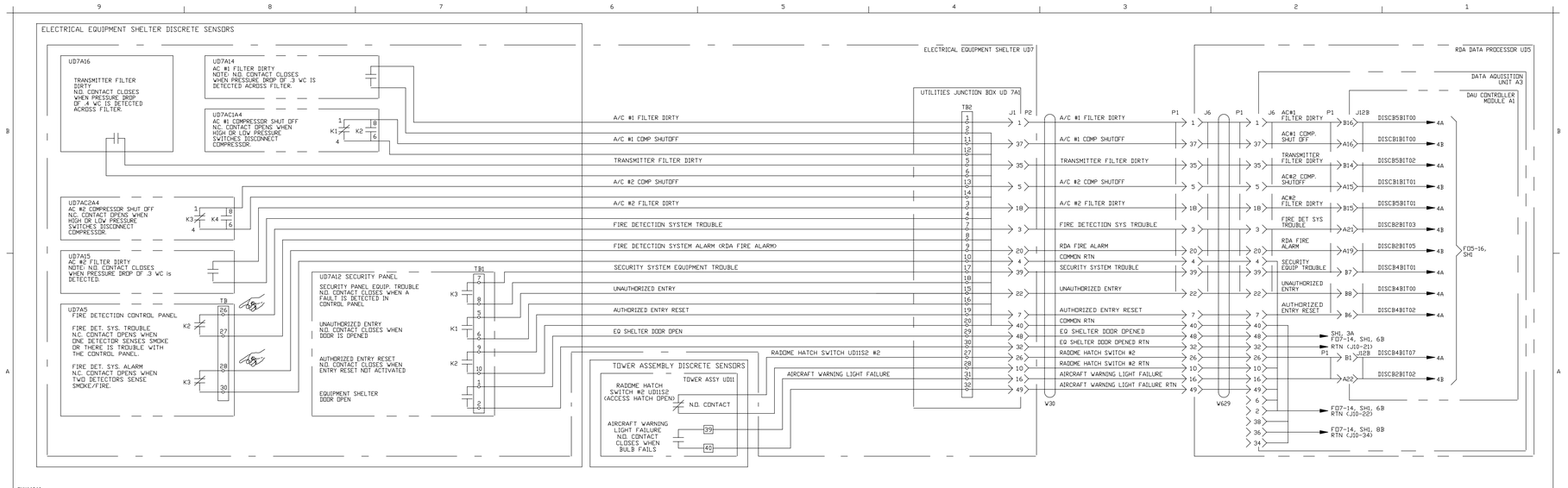


NX1943

Figure FO5-18. Discrete Status Data Monitoring Functional Flow Diagram (Kohler) (Sheet 2 of 2)

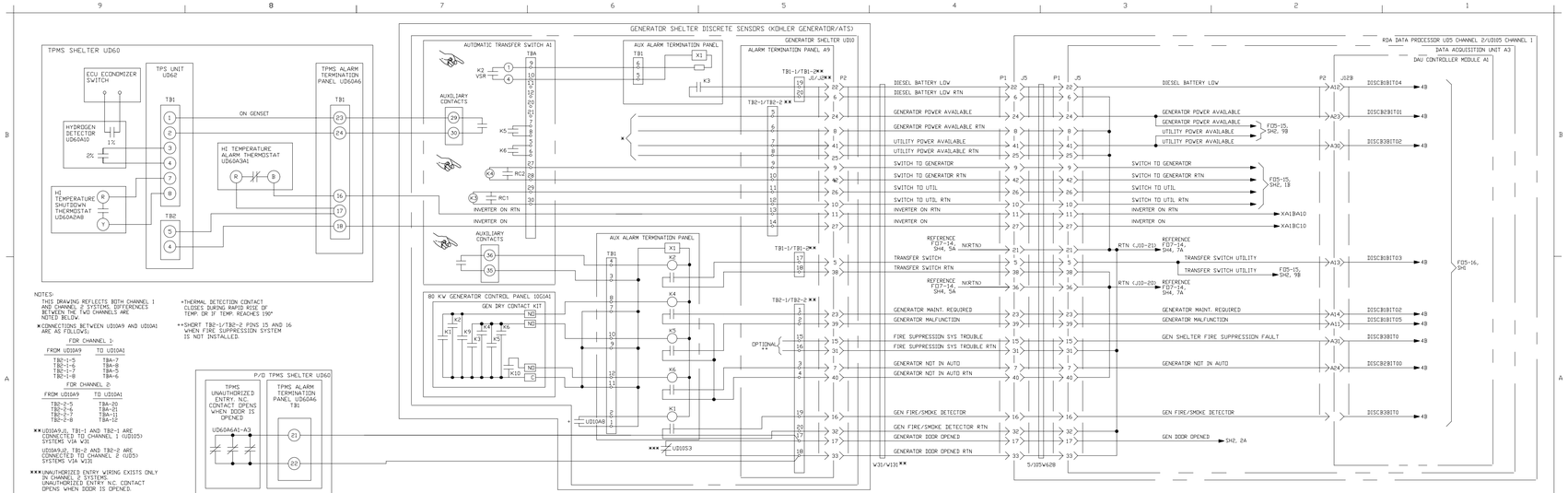


Figure FO5-19. Redundant Discrete Status Data Monitoring Functional Flow Diagram (Sheet 1 of 2)

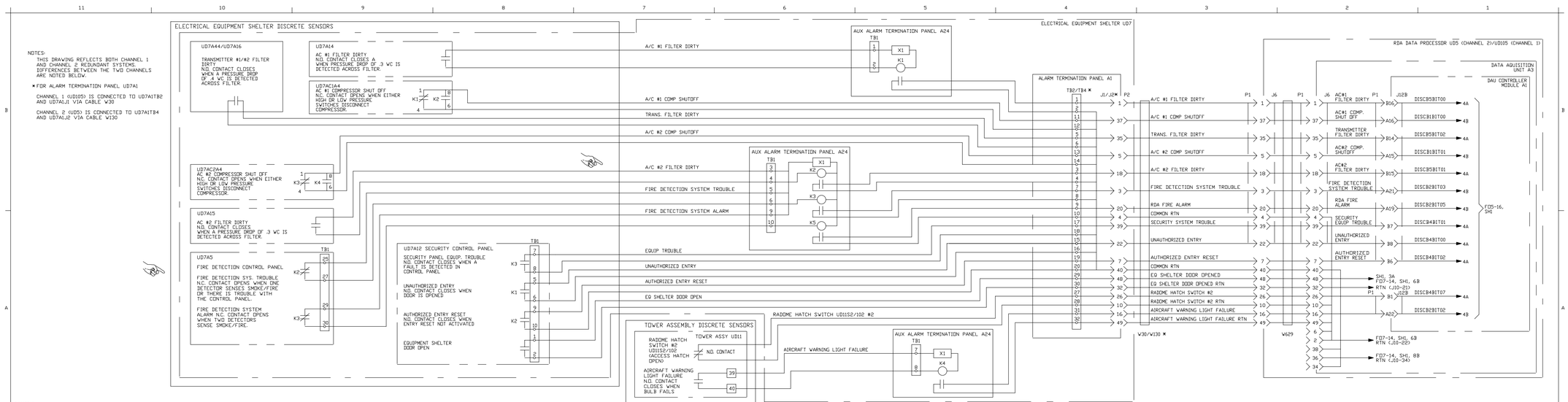


NX1945

Figure FO5-19. Redundant Discrete Status Data Monitoring Functional Flow Diagram (Sheet 2 of 2)

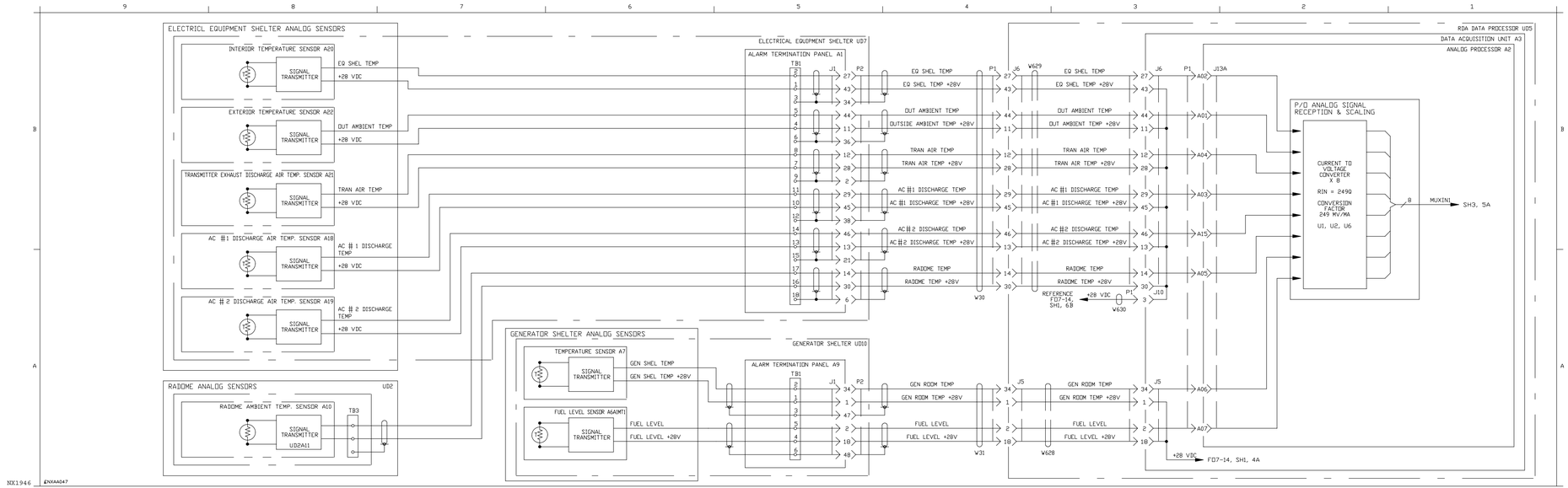


Figure FO5-20. Analog Status Data Monitoring Functional Flow Diagram (Sheet 1 of 3)

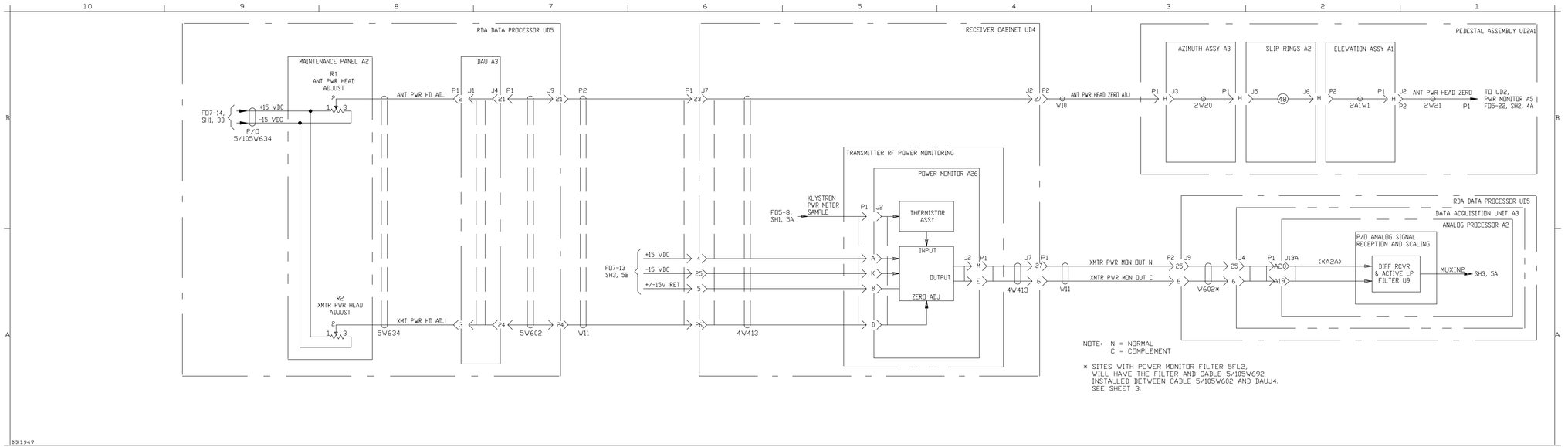


Figure FO5-20. Analog Status Data Monitoring Functional Flow Diagram (Sheet 2 of 3)

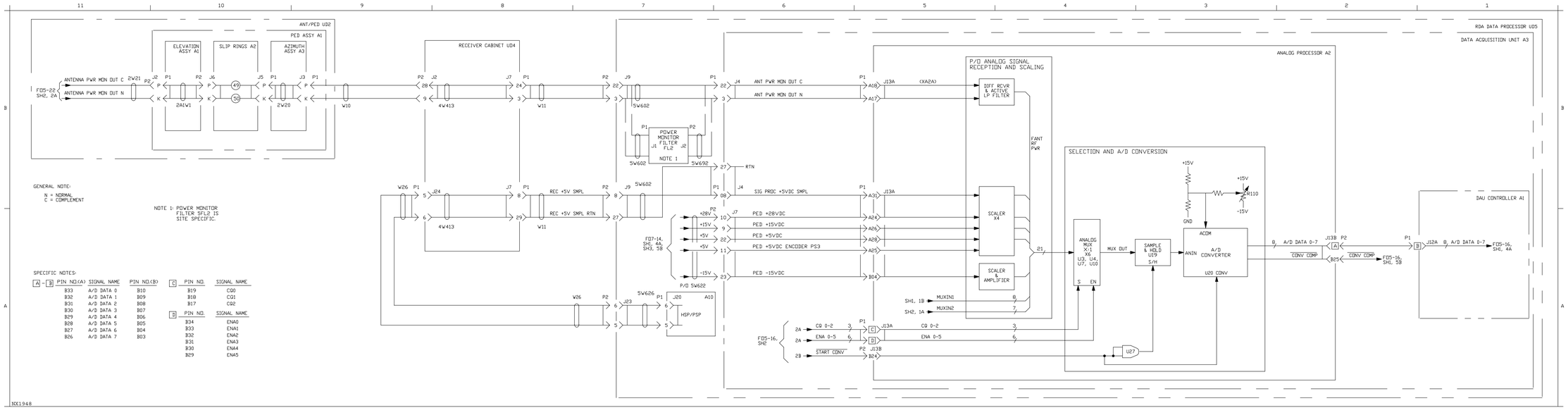


Figure FO5-20. Analog Status Data Monitoring Functional Flow Diagram (Sheet 3 of 3)

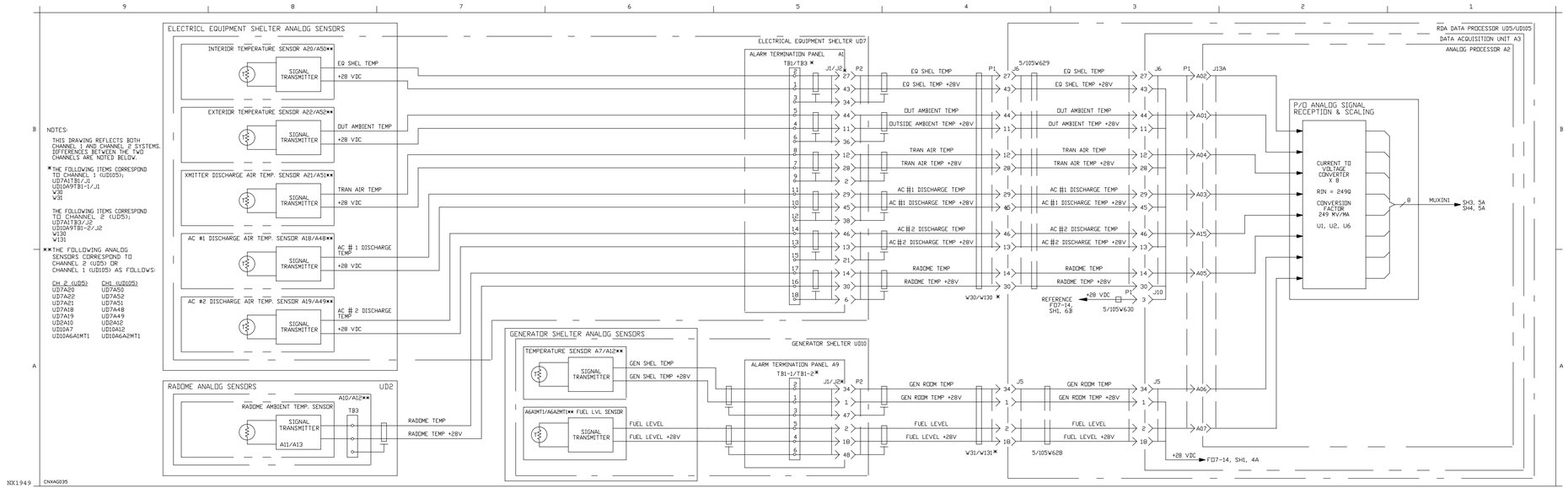


Figure FO5-21. Redundant Analog Status Data Monitoring Functional Flow Diagram (Sheet 1 of 4)

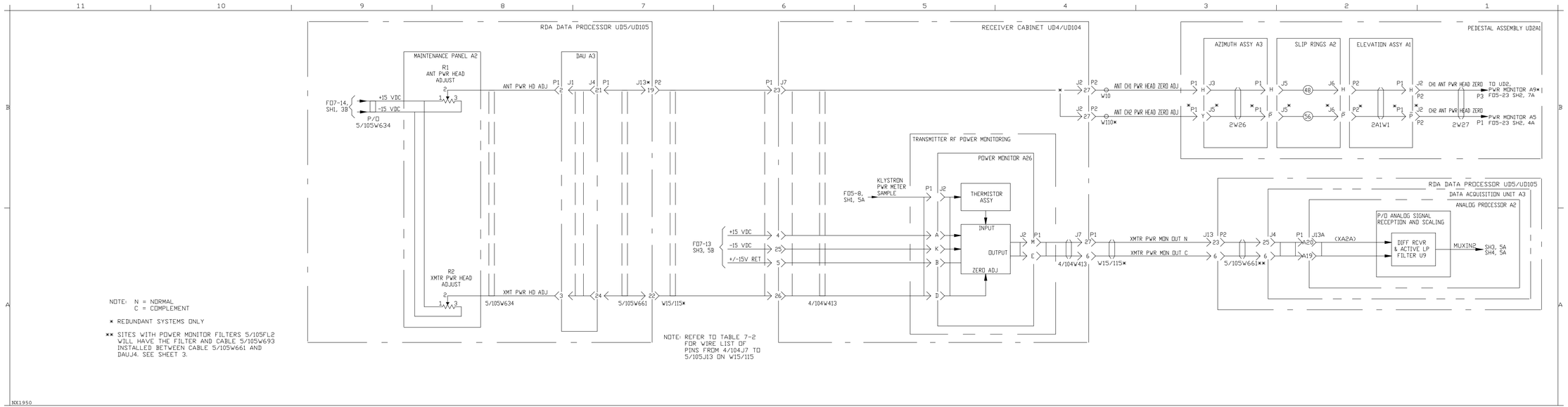


Figure FO5-21. Redundant Analog Status Data Monitoring Functional Flow Diagram (Sheet 2 of 4)

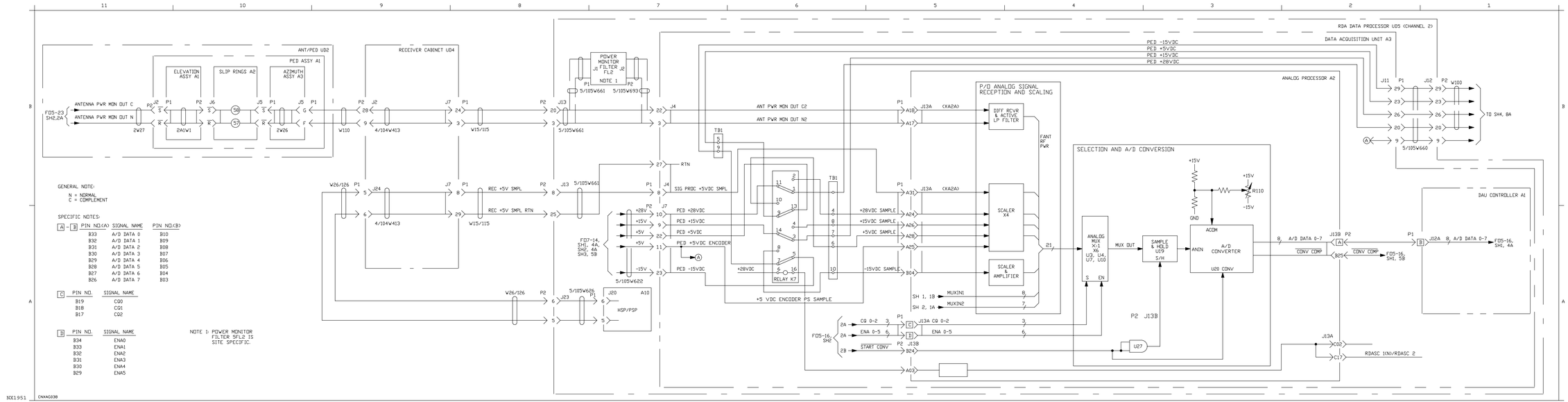


Figure FO5-21. Redundant Analog Status Data Monitoring Functional Flow Diagram (Sheet 3 of 4)

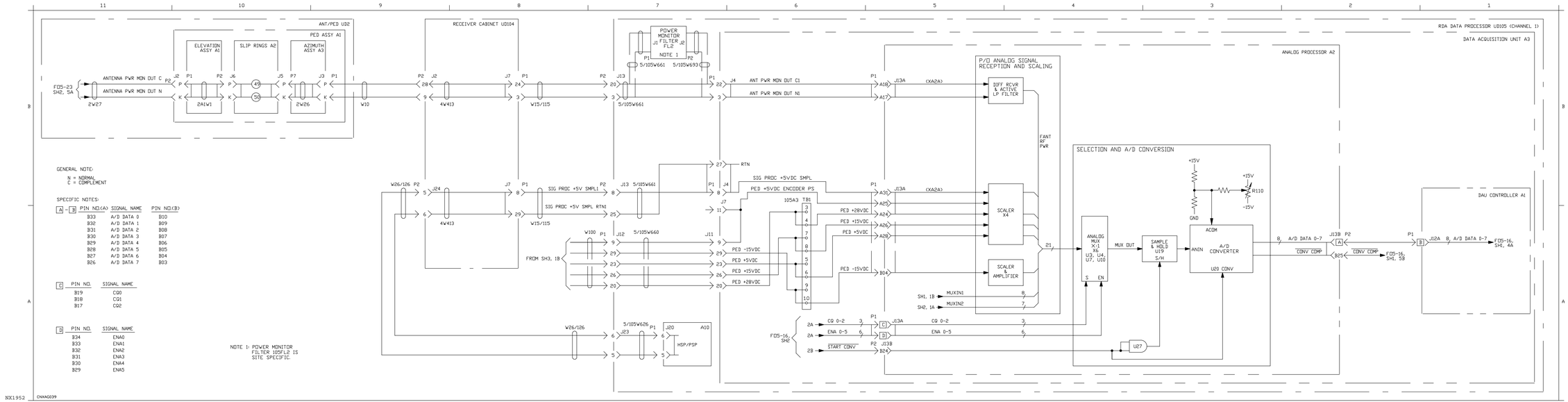


Figure FO5-21. Redundant Analog Status Data Monitoring Functional Flow Diagram (Sheet 4 of 4)

WAVEGUIDE RUN FROM TRANSMITTER TO THE RECEIVER EQUIPMENT SHELTER

| | | | |
|---|---|---|---|
| UD3 | DC1 | 1D19766H03 | UNDIRECTIONAL WAVEGUIDE COUPLER |
| UD1 | WG1 | 1526834-301 | WG <BENT> |
| UD1 | WG2 | 1213632-201 | HARMONIC FILTER |
| UD1 | WG3 | 1213776-301 | WG <STRIGHT> |
| UD1 | WG4 | 1213630-201/2 | CIRCULATOR |
| | | | UD1AT2 1213626-201 MEDIUM POWER TERMINATION |
| UD1 | WG6 | 1213656-XXX | SPECTRUM FILTER |
| UD1 | DC1 | 1213631-202 | CROSS GUIDE COUPLER |
| UD1 | S1 | 1213657-201 | WG SWITCH |
| | | | UD1WG7 1216497-301 WG |
| | | | UD1AT3 1213658-201 HIGH POWER TERMINATION |
| | | | UD1AT1 1213659-201 LOW POWER TERMINATION |
| UD1 | WG10 | 1213779-201 | WG <FLEX> |
| UD1 | WG11 | 1213778-310 | WG <TWISTED> |

NOTES

1. SYSTEMS WITHOUT SPECTRUM FILTER INCLUDE INSTEAD TWO STRAIGHT PIECES OF WAVEGUIDE 1526801 AND 1526806.

2. CRYSTAL DETECTORS DETECT BACK POWER AND ARE SENT TO THE ARC DETECTOR IN TRANSMITTER

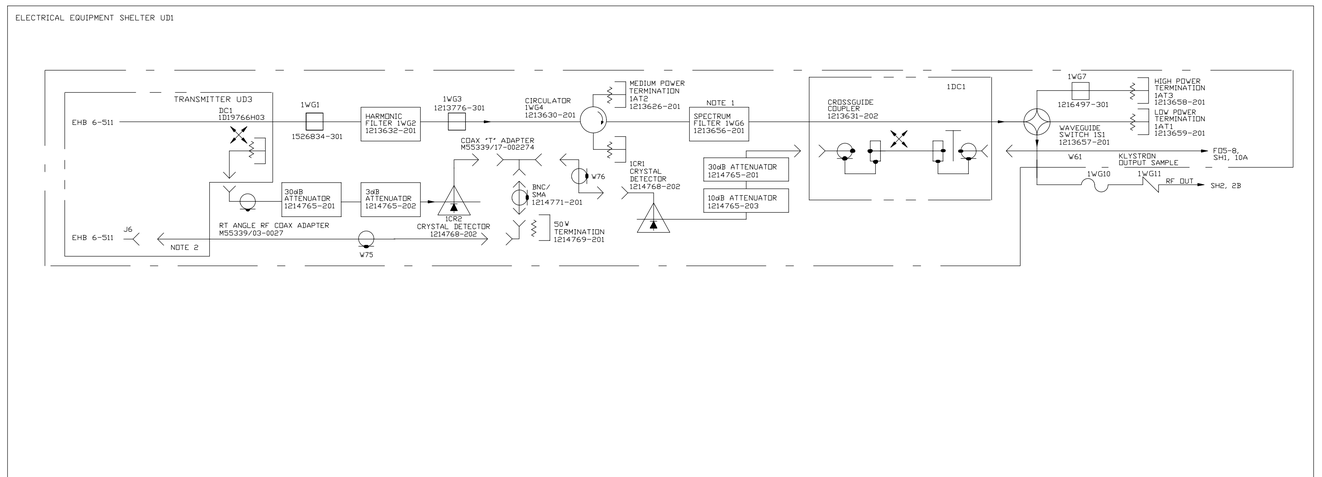


Figure FO5-22. Microwave Distribution Flow Diagram (Sheet 1 of 2)

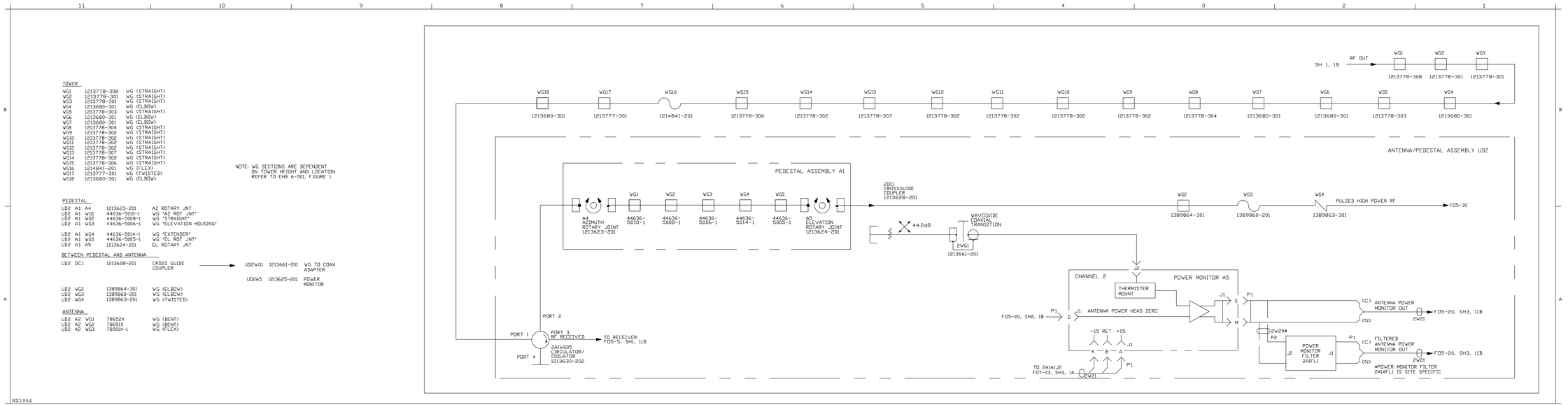


Figure FO5-22. Microwave Distribution Flow Diagram (Sheet 2 of 2)

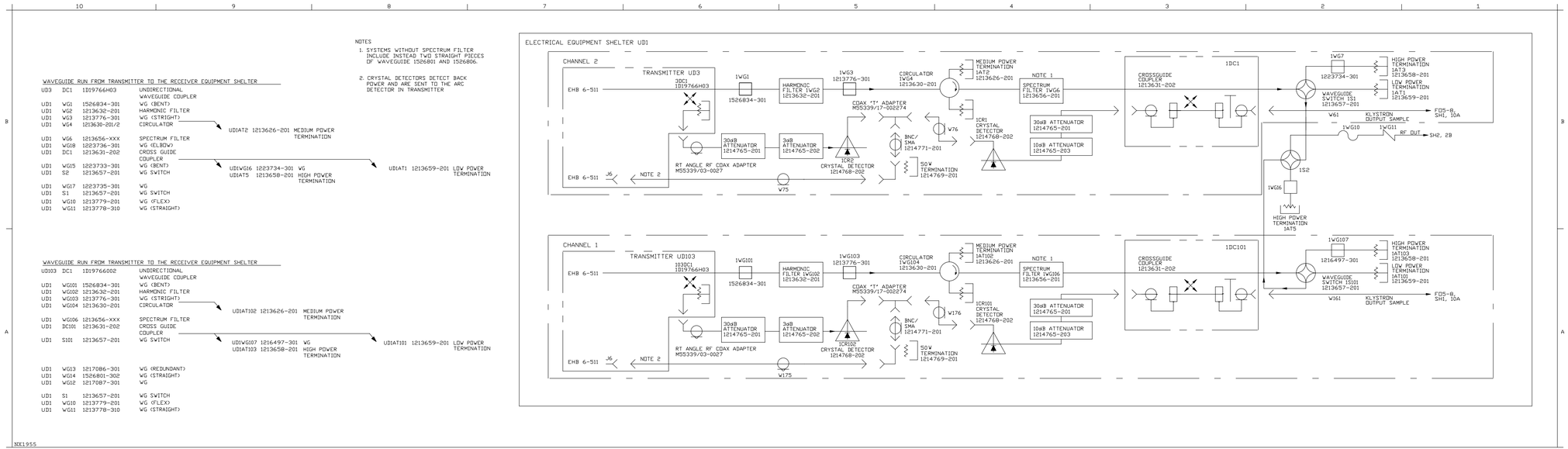


Figure FO5-23. Redundant Microwave Distribution Flow Diagram
(Sheet 1 of 2)

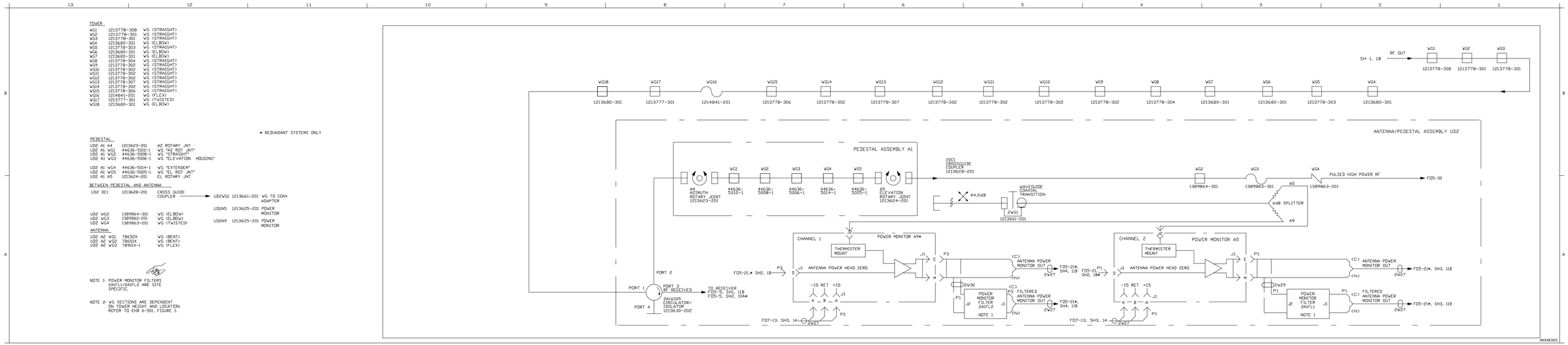


NX1956

Figure FO5-23. Redundant Microwave Distribution Flow Diagram (Sheet 2 of 2)

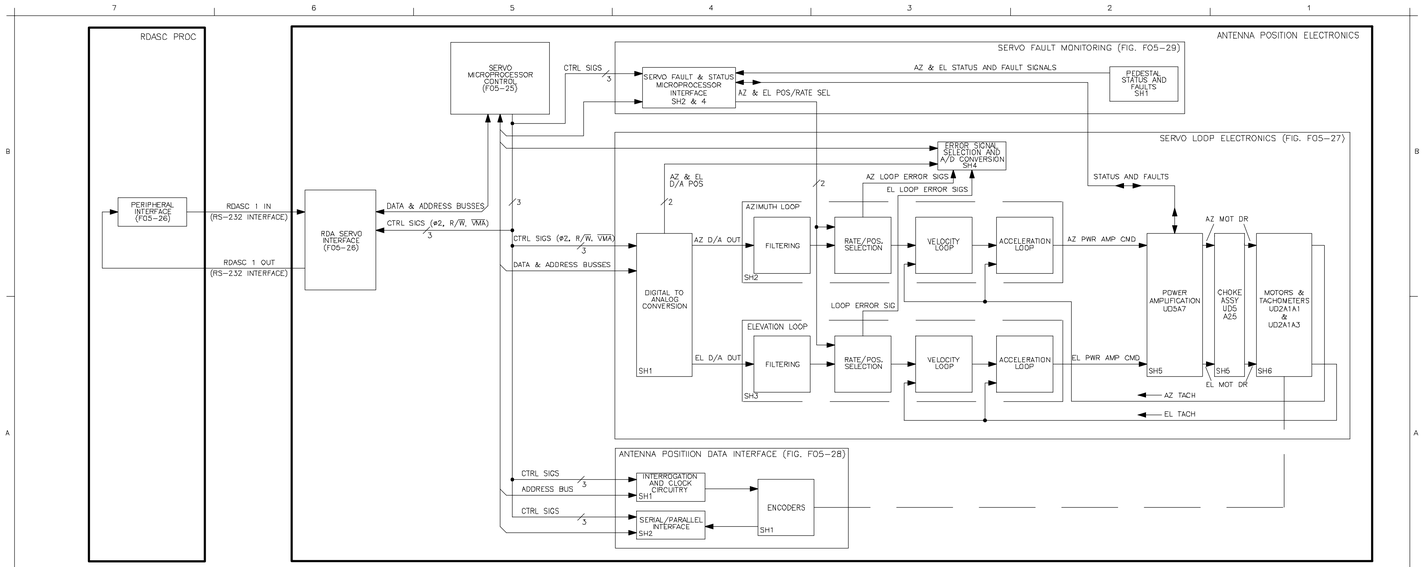


Figure FO5-24. Antenna Positioning Electronics, Functional Block Diagram

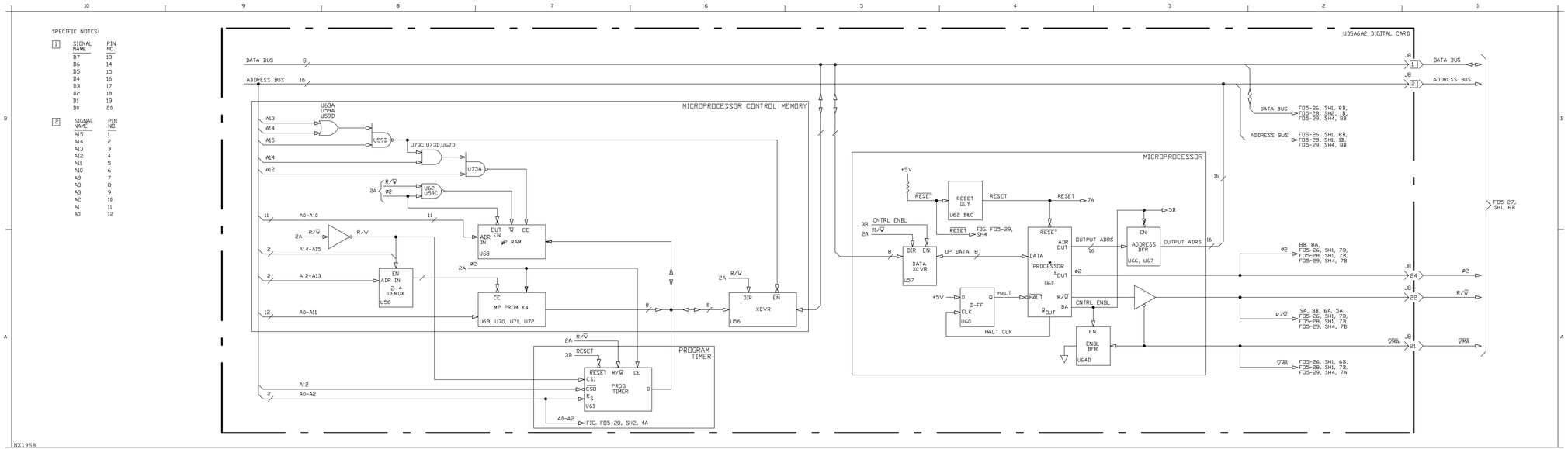


Figure FO5-25. Servo Microprocessor Control Circuitry, Functional Flow Diagram

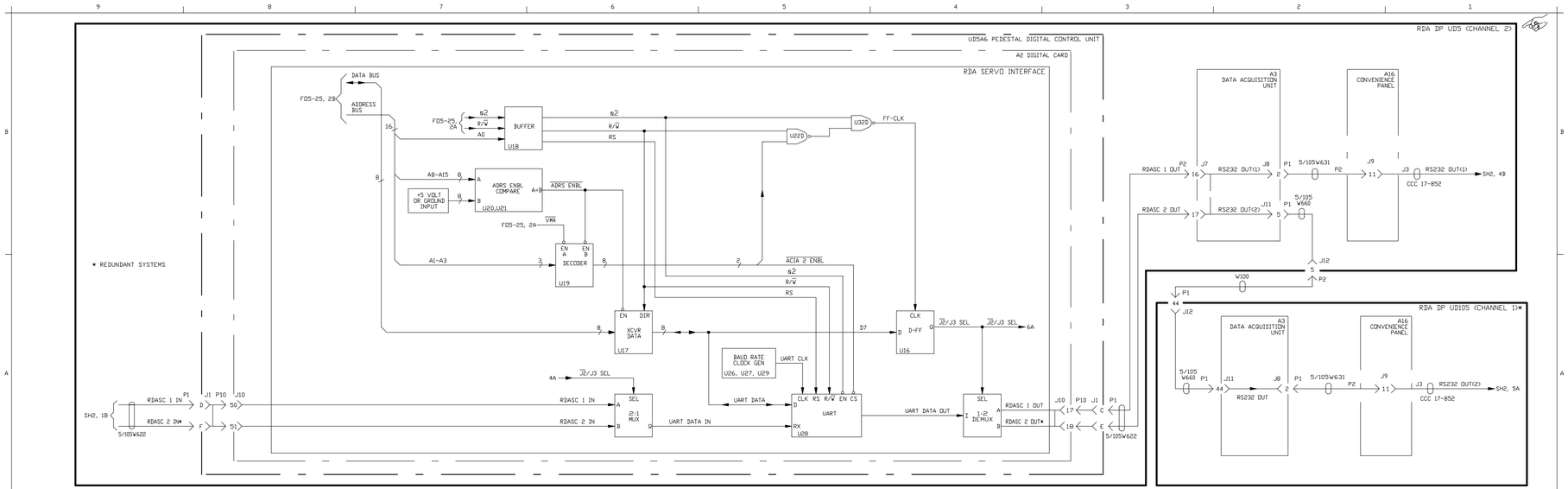


NX1959

Figure FO5-26. RDA Servo Interface, Functional Flow Diagram
(Sheet 1 of 2)

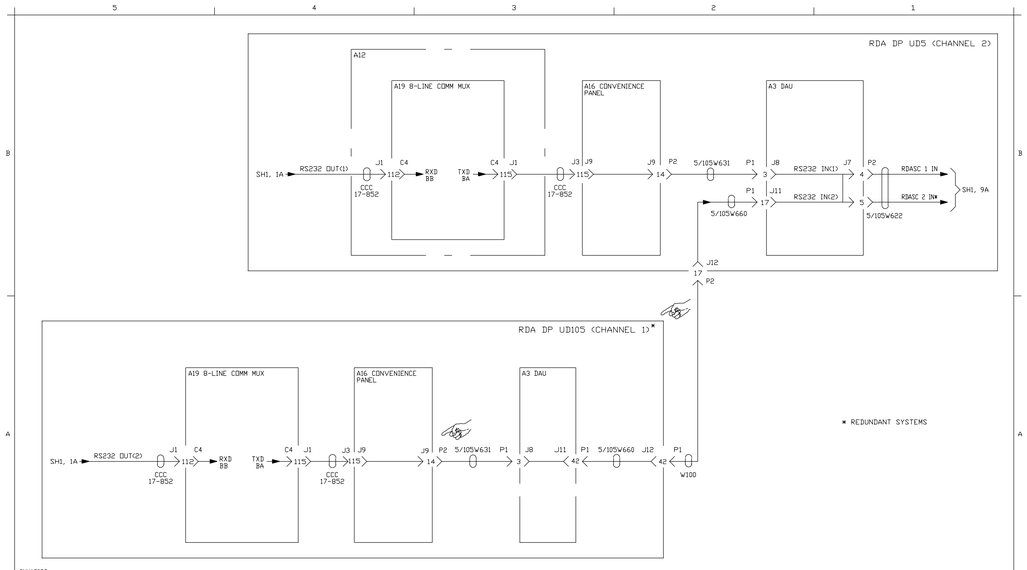


Figure FO5-26. RDA Servo Interface, Functional Flow Diagram
(Sheet 2 of 2)



NX1960

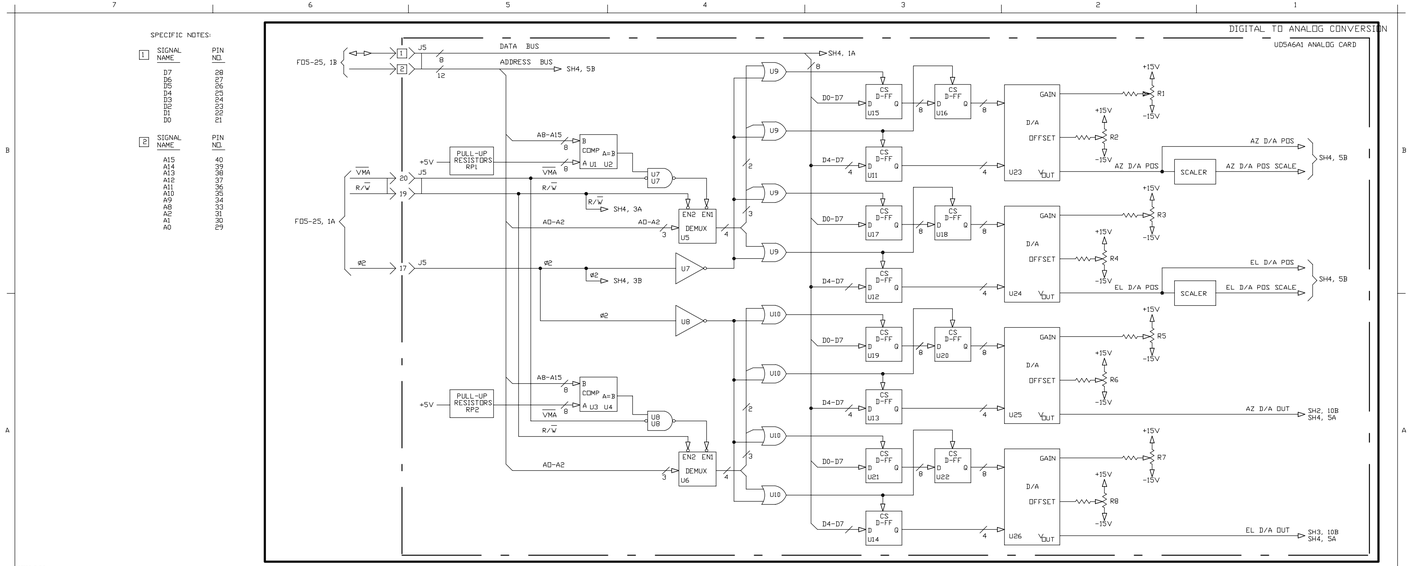


Figure FO5-27. Servo Loop Electronics, Functional Flow Diagram (Sheet 1 of 6)

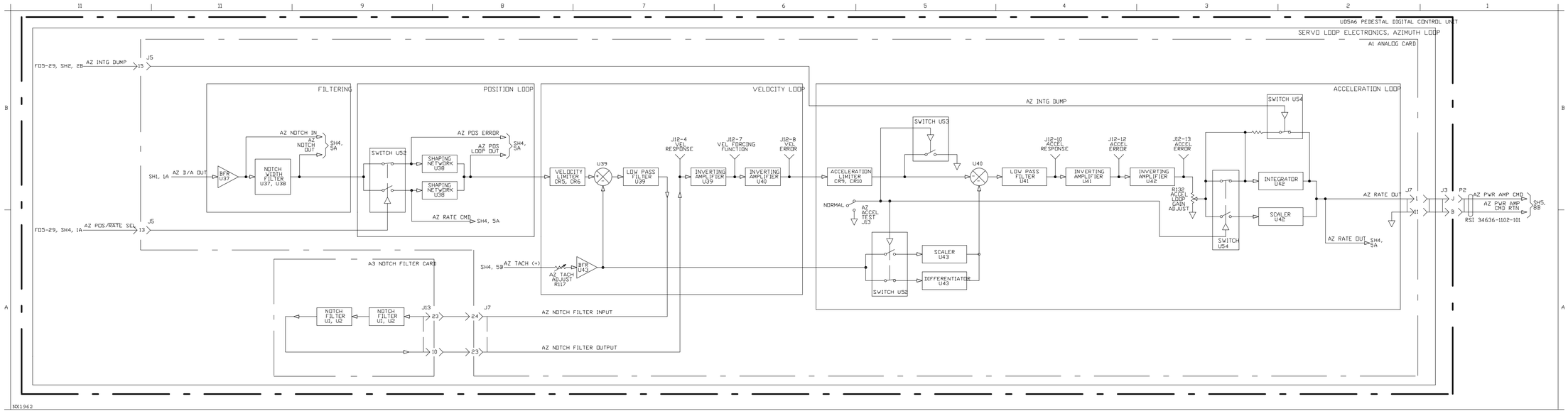


Figure FO5-27. Servo Loop Electronics, Functional Flow Diagram (Sheet 2 of 6)

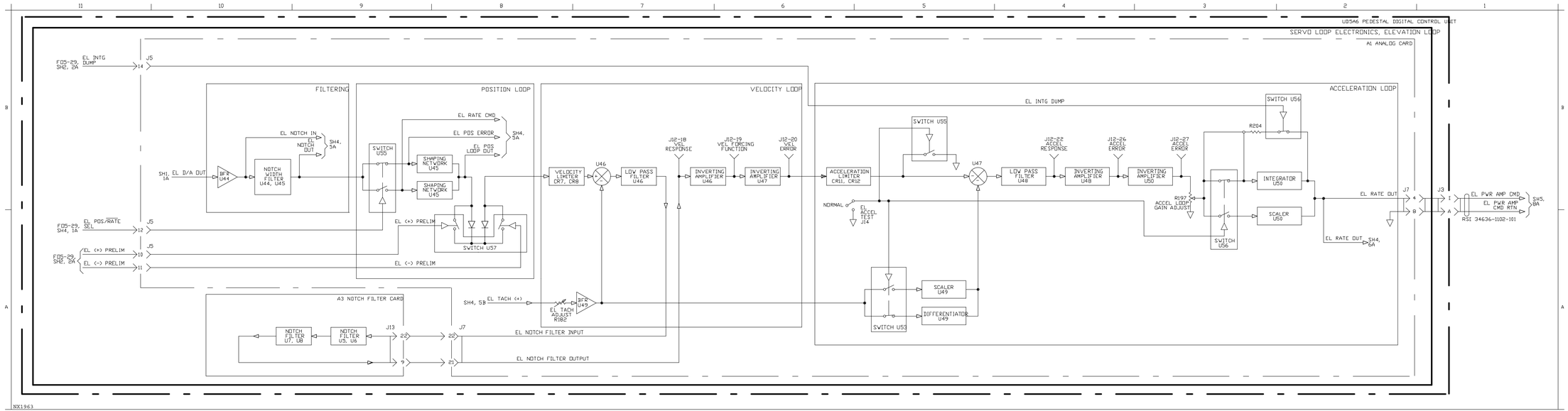


Figure FO5-27. Servo Loop Electronics, Functional Flow Diagram (Sheet 3 of 6)

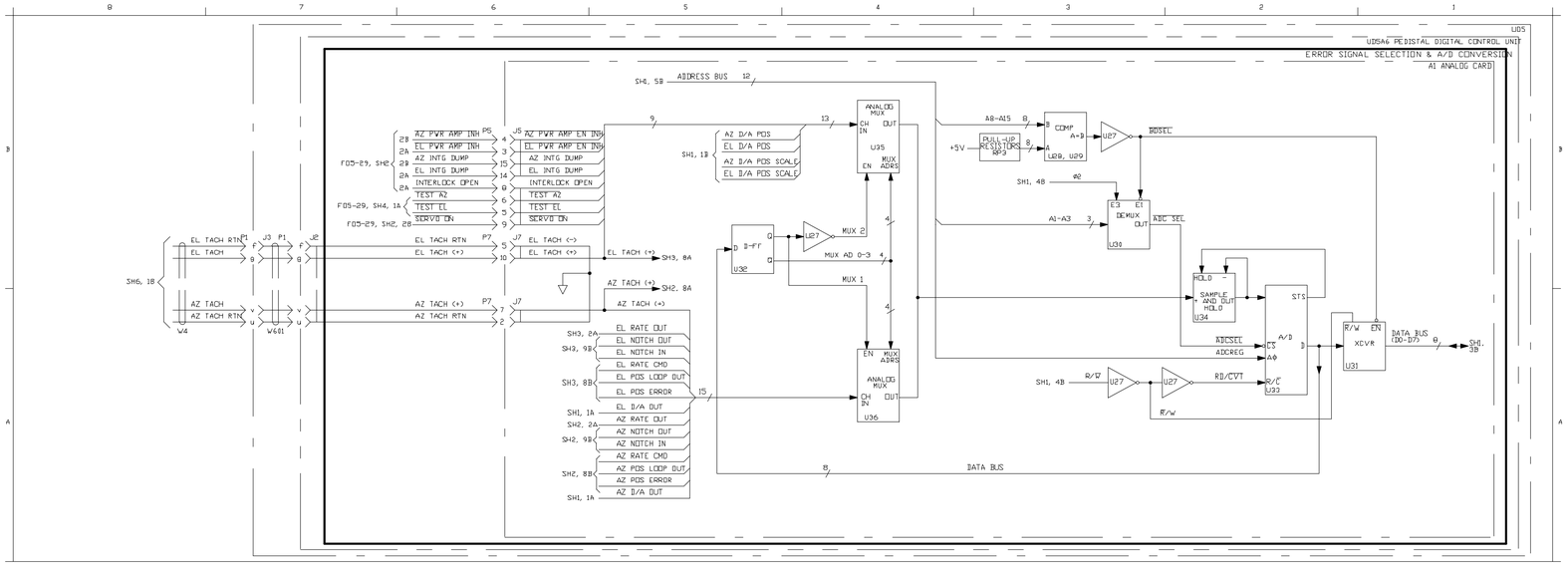


Figure FO5-27. Servo Loop Electronics, Functional Flow Diagram (Sheet 4 of 6)



NX1964

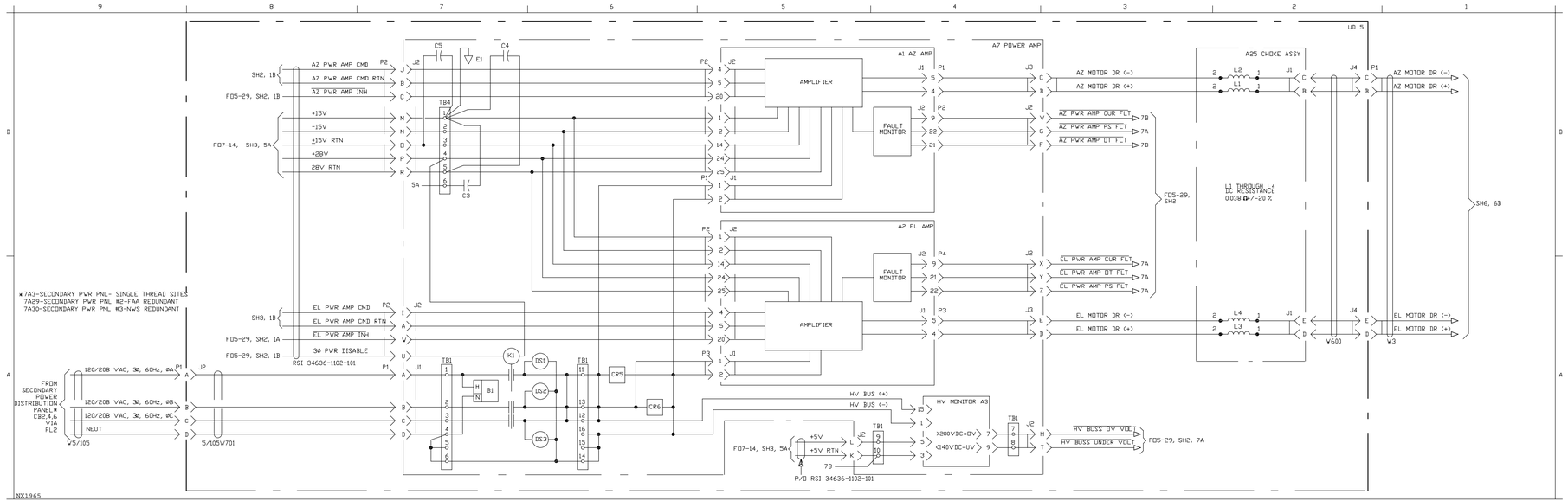


Figure FO5-27. Servo Loop Electronics, Functional Flow Diagram (Sheet 5 of 6)

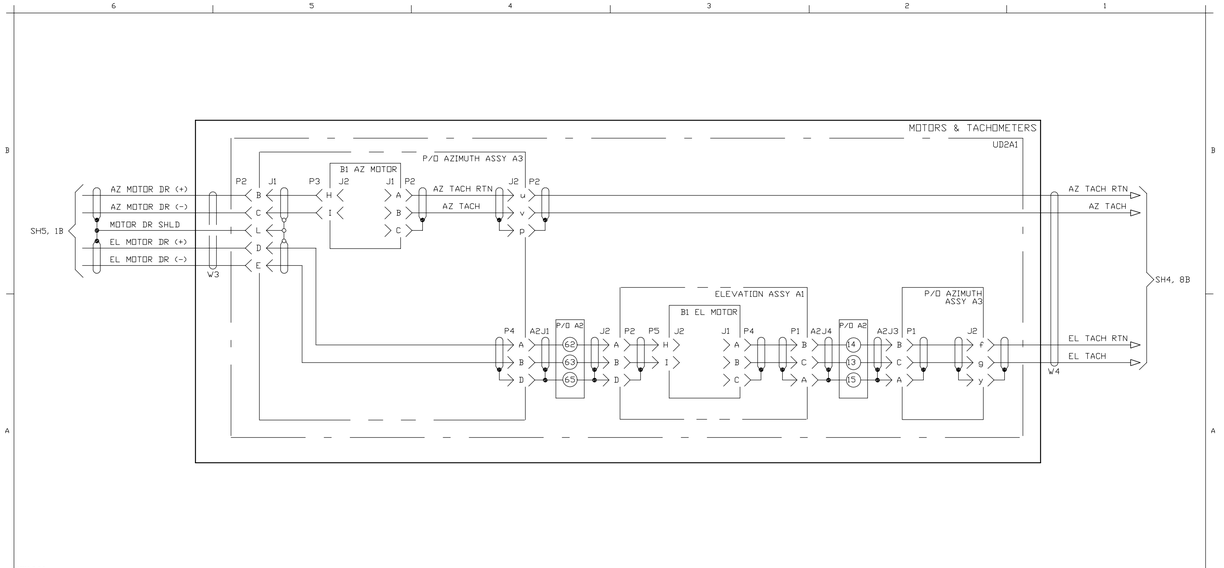


Figure FO5-27. Servo Loop Electronics, Functional Flow Diagram (Sheet 6 of 6)

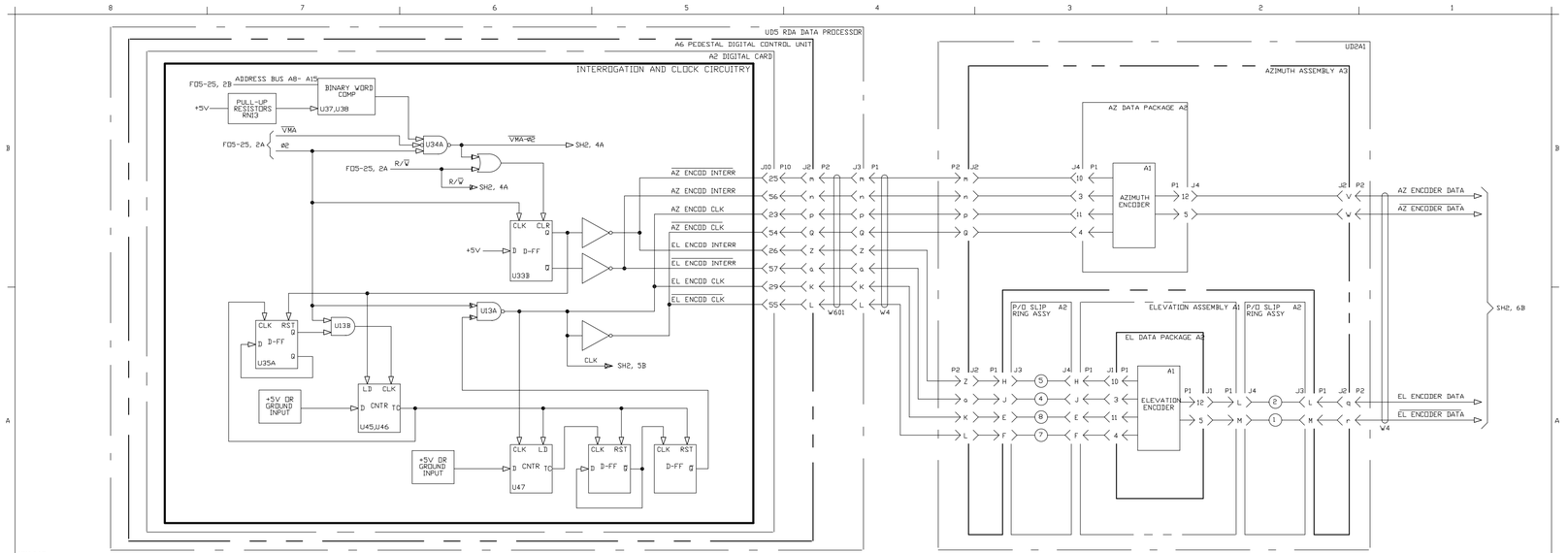


Figure FO5-28. Antenna Position Data Interface, Functional Flow Diagram (Sheet 1 of 2)

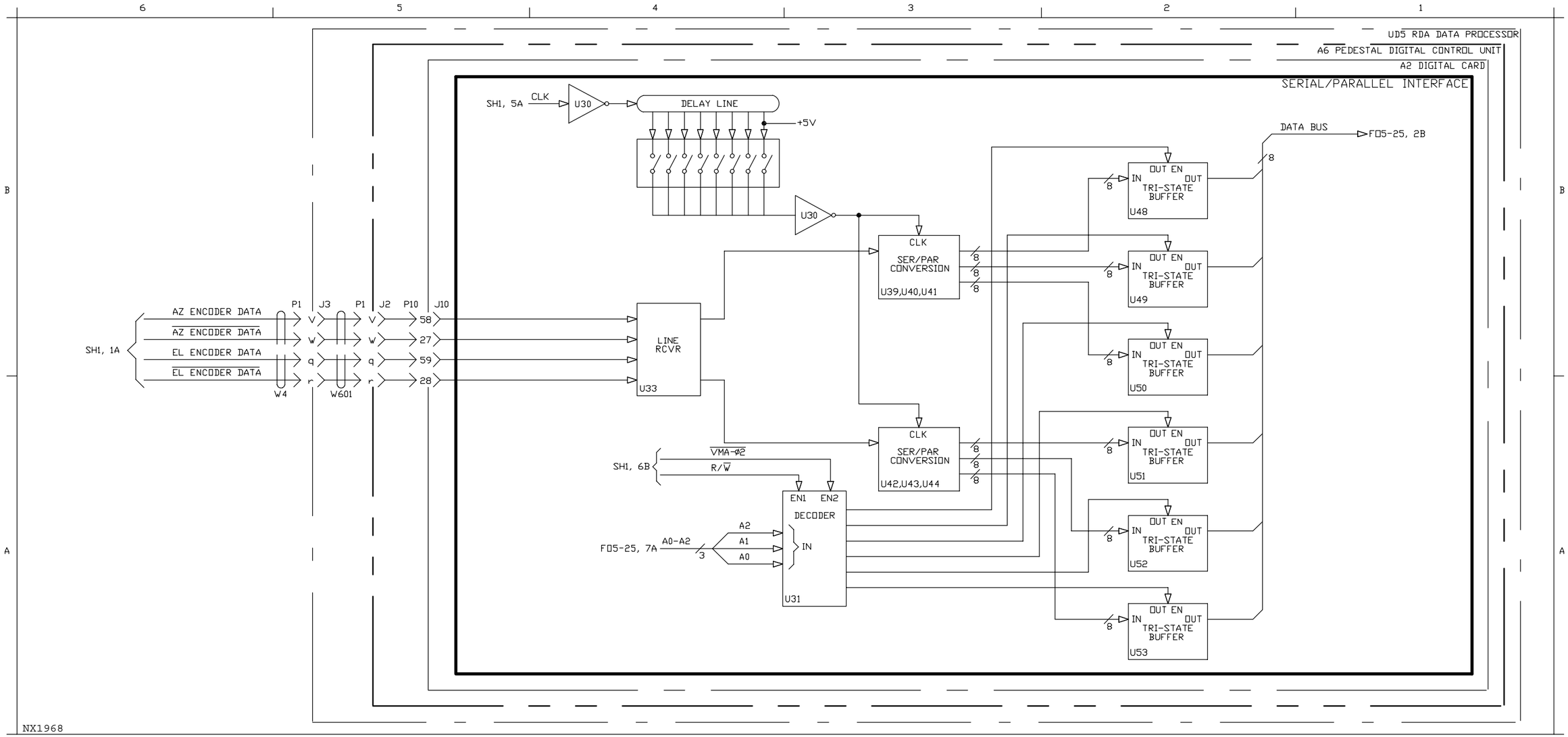


Figure FO5-28. Antenna Position Data Interface, Functional Flow Diagram (Sheet 2 of 2)

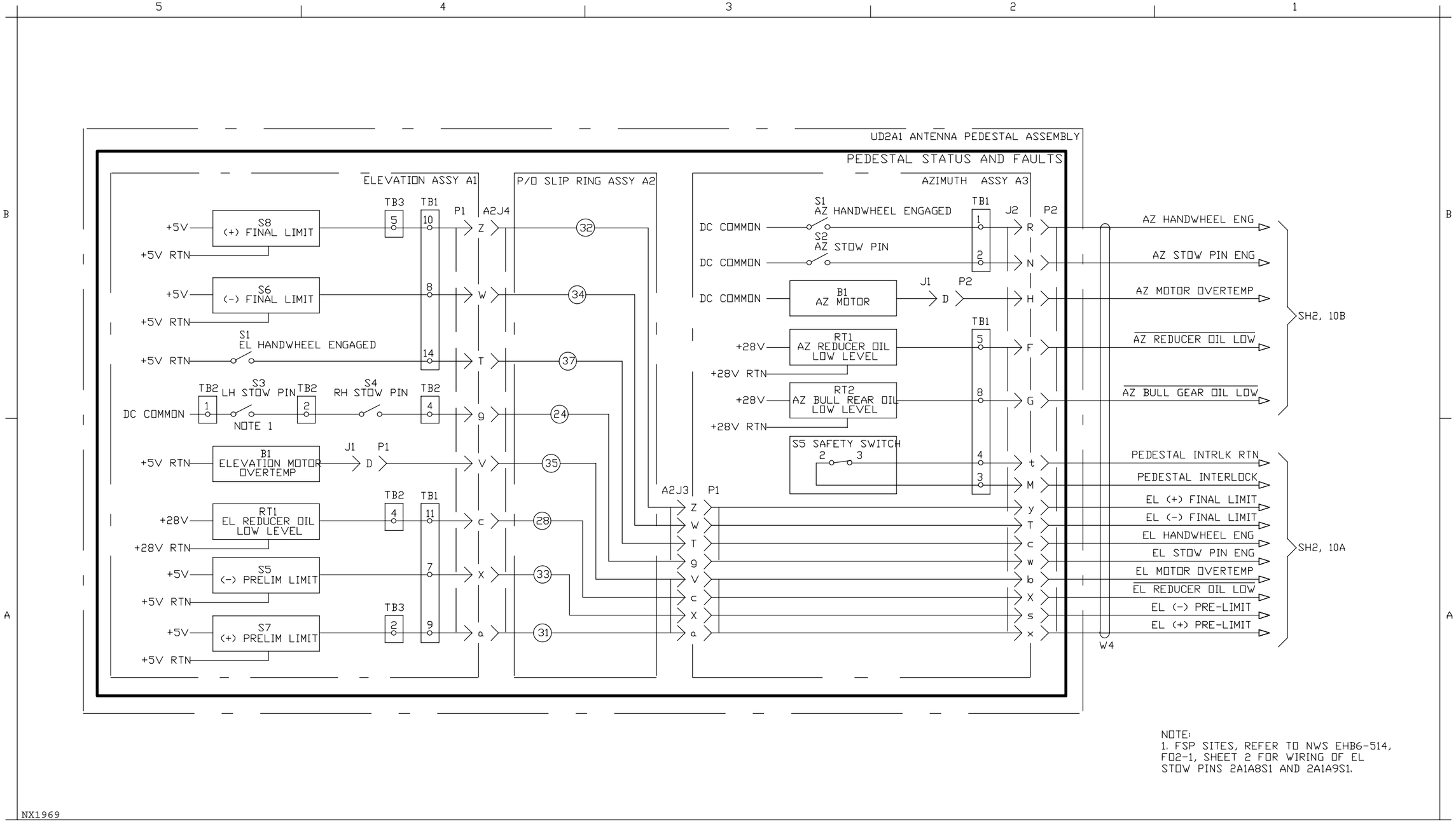


Figure FO5-29. Servo Fault Monitoring, Functional Flow Diagram (Sheet 1 of 4)

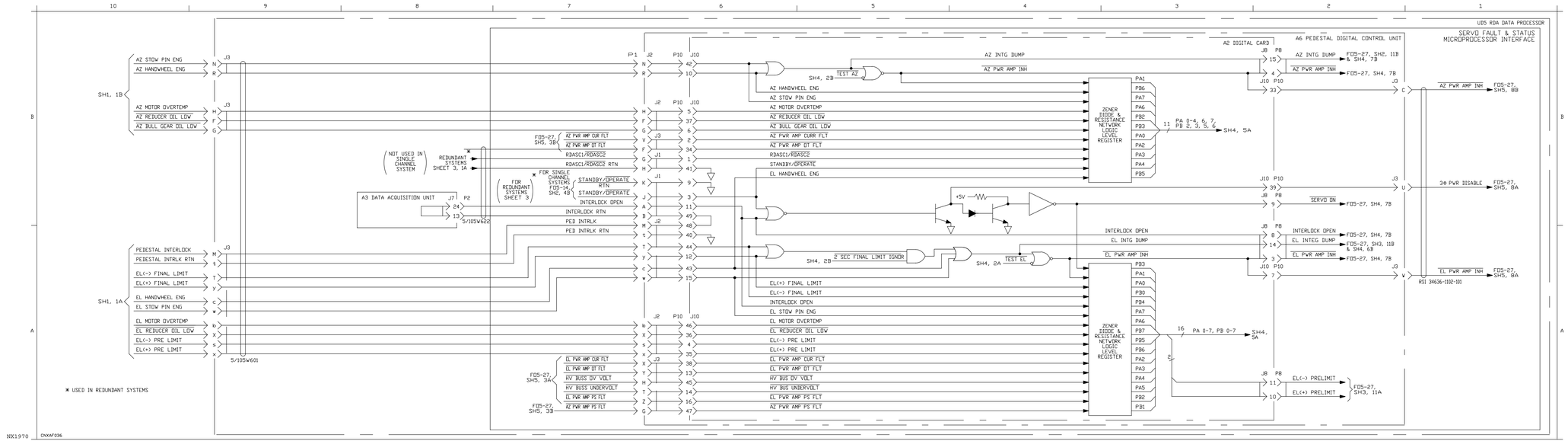


Figure FO5-29. Servo Fault Monitoring, Functional Flow Diagram (Sheet 2 of 4)

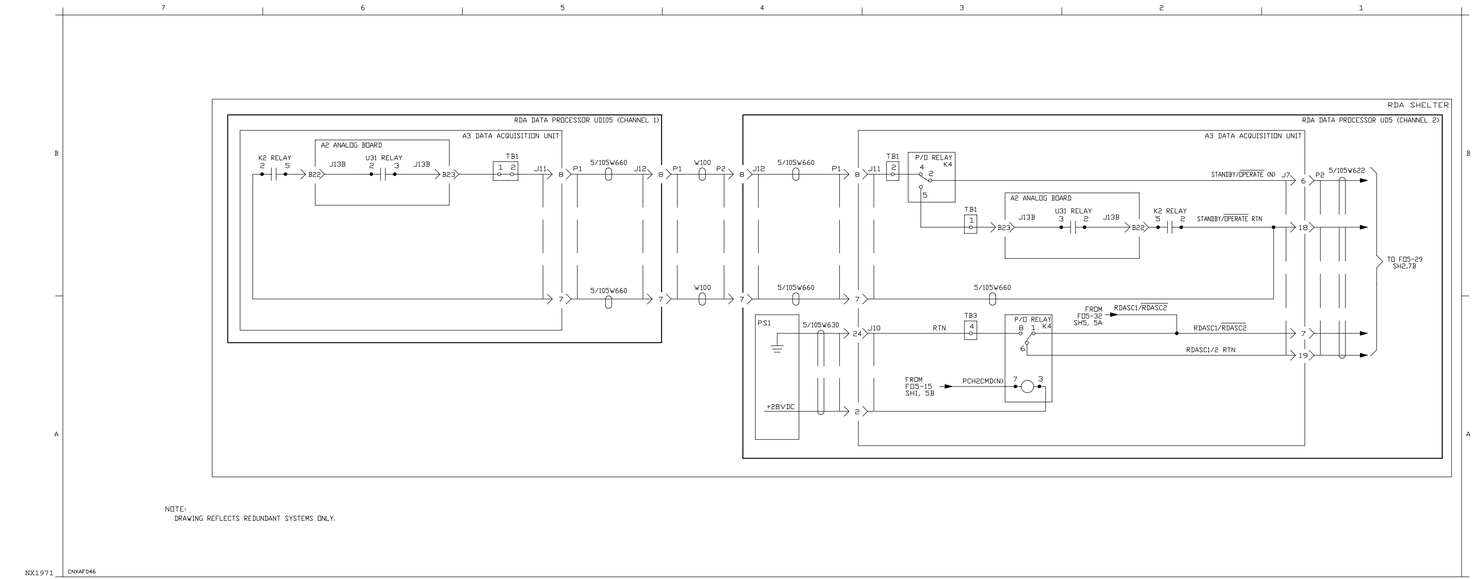


Figure FO5-29. Servo Fault Monitoring, Functional Flow Diagram (Sheet 3 of 4)

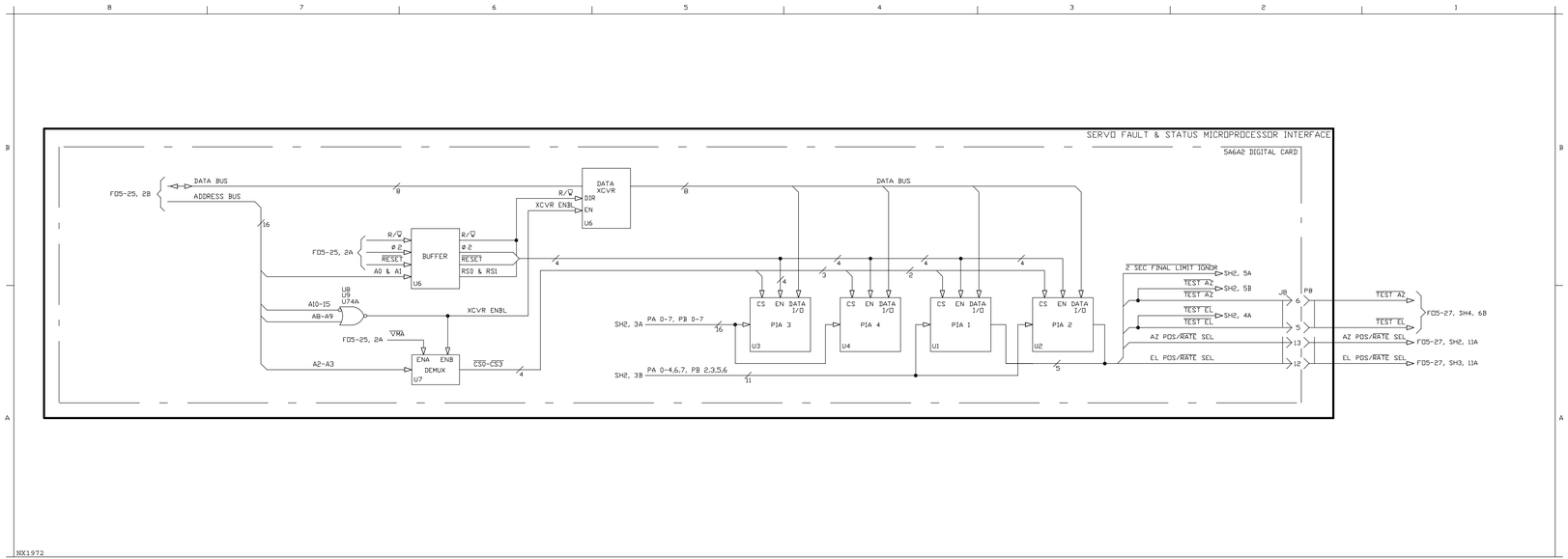


Figure FO5-29. Servo Fault Monitoring, Functional Flow Diagram (Sheet 4 of 4)

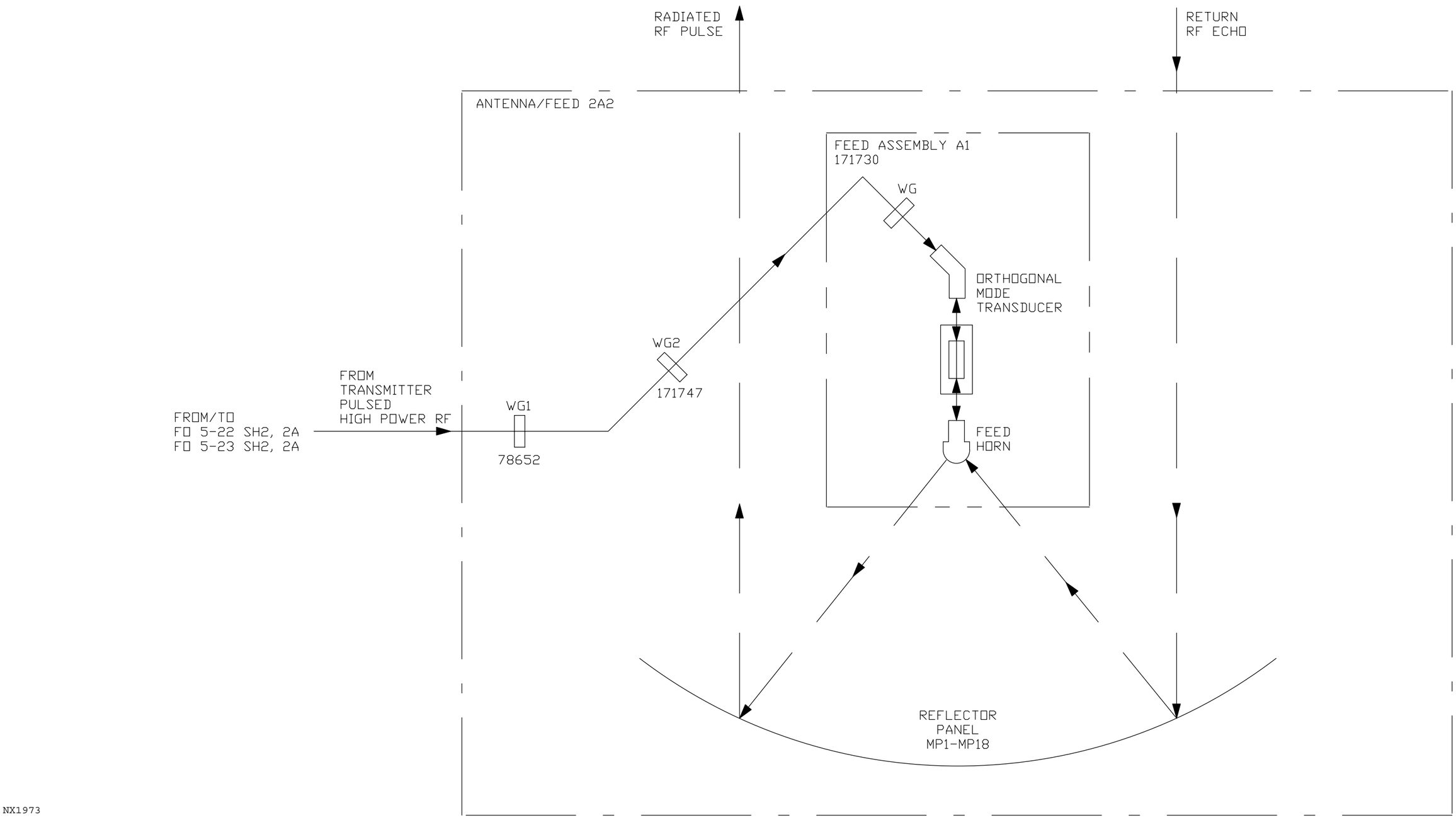


Figure FO5-30. Antenna, Functional Block Diagram

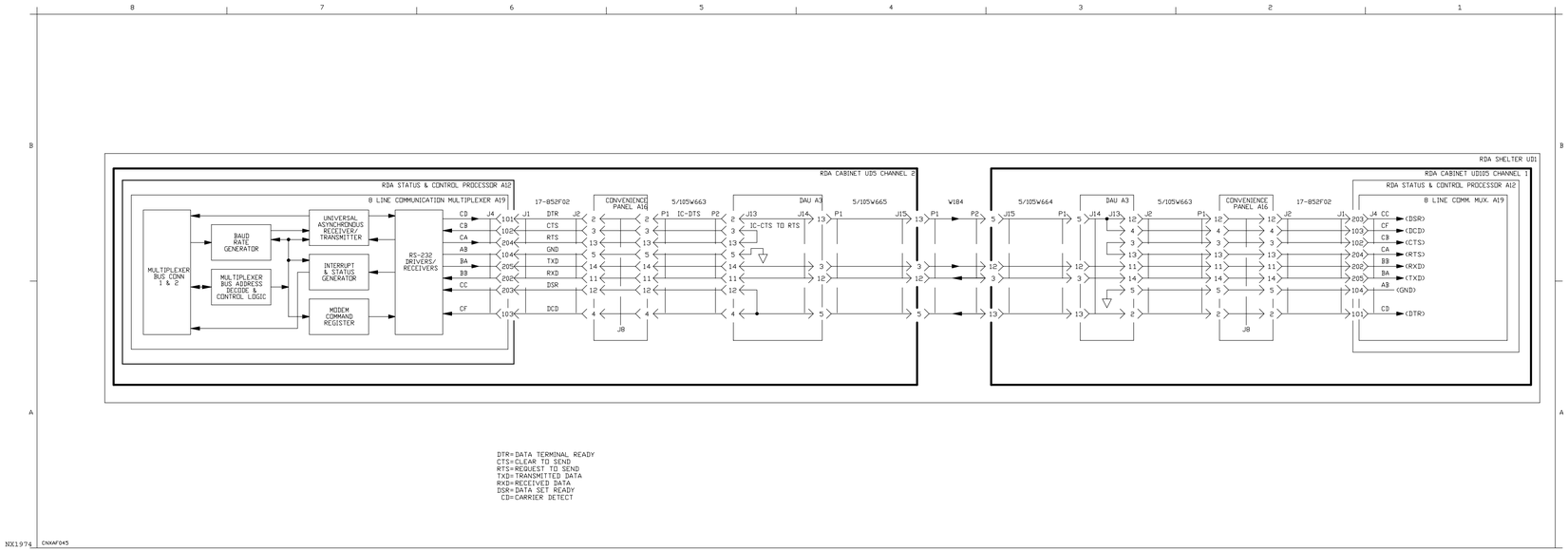


Figure FO5-31. Redundant Configuration Interprocessor Link

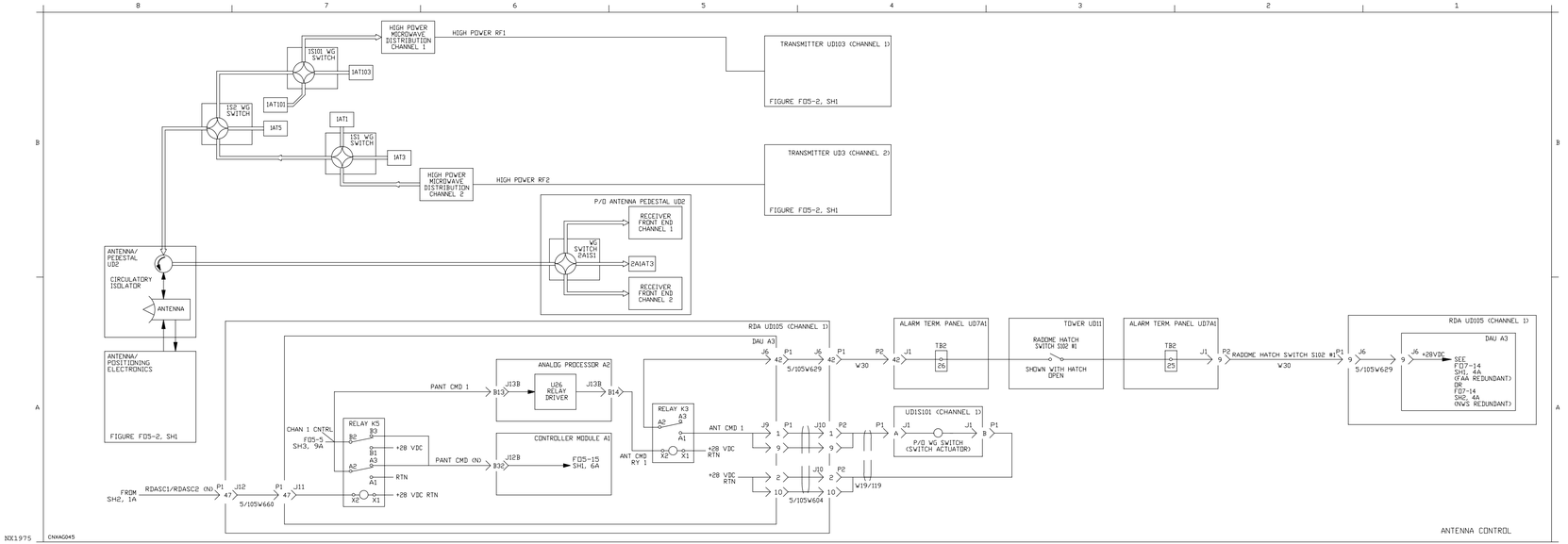


Figure FO5-32. Redundant Switching (Sheet 1 of 8)

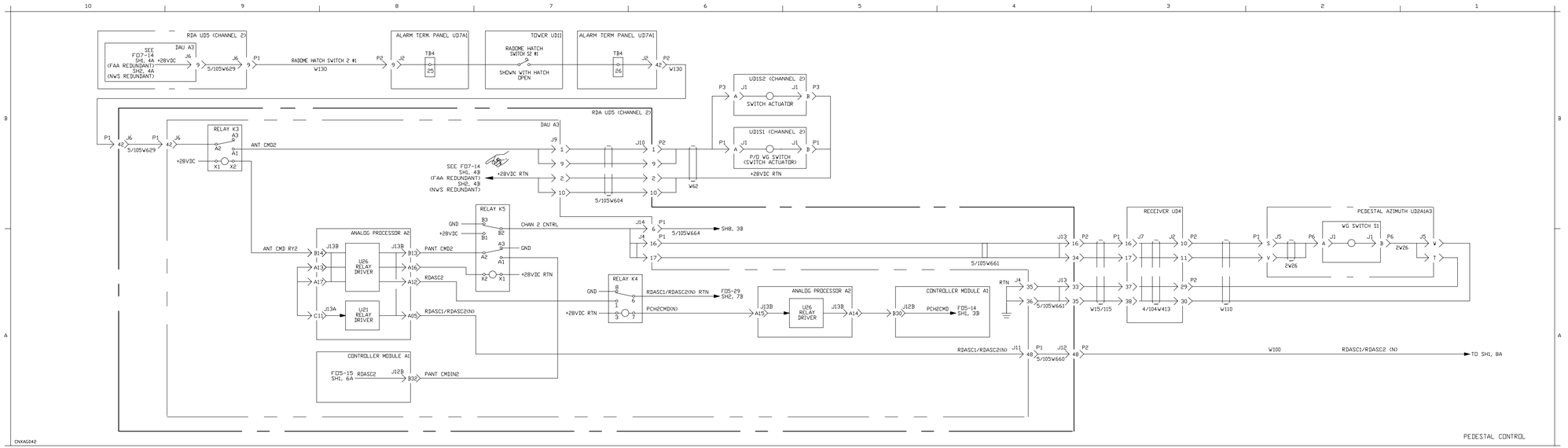


NX1976

Figure FO5-32. Redundant Switching (Sheet 2 of 8)

REDUNDANT SWITCHING TRUTH TABLE

ANTENNA CONTROL

| Channel Control | CHAN2 (MASTER) | | CHAN1 (SLAVE) |
|---|---|---|---|
| CHAN 2 COMMAND | 1 (HIGH) | | 0 (LOW) |
| PCH2 CMD | 1 | | 0 |
| 5A3K4 | EN | | DE-EN |
| RDASC1/RDASC2 (N) | 0 | | 1 |
| 5A3K5 | EN | | DE-EN |
| 2A1A3S1 | EN | | DE-EN |
| RF ECHOES | CHAN2 | | CHAN1 |
| WB CONTROL (NWS) | CHAN2 | | CHAN1 |
| PANT CMD2 | ANT=1 | DL=0 | 0 |
| 5A3K3 | EN | DE-EN | DE-EN |
| ANT CMD2 | 28V* RAD HAT | OPEN | OPEN |
| 1S1 & 1S2 | EN | DE-EN | DE-EN |
| ANT RF | UD3 | - | UD103 |
| 105A3K5 | DE-EN | | EN |
| PANT CMD1 | 0 | ANT=1 | DL=0 |
| 105A3K3 | DE-EN | EN | DE-EN |
| ANT CMD1 | OPEN | 28V* RAD HAT | OPEN |
| 1S101 | DE-EN | EN | DE-EN |
| 5A3K8 | DE-EN | EN | DE-EN |

PEDESTAL CONTROL

| PCH2 CMD | 1 | | 0 | |
|---|---|---|---|---|
| 5A3K4 | EN | | DE-EN | |
| PED OPER CMD2 | OPER=1 | OPER (N)=0 | 0 | |
| 5A3A2U31 | EN | DE-EN | DE-EN | |
| 5A3K2 | EN IF RADOME HATCH CLOSED | | | |
| STANDBY/OPER (N) | 0 | 1 | NA | |
| SERVO ON (N) | 0 | 1 | NA | |
| PED OPER CMD1 | 0 | | OPER=1 | OPER (N)=0 |
| 105A3A2U31 | DE-EN | | EN | DE-EN |
| 105A3K2 | EN IF RADOME HATCH IS CLOSED | | | |
| STANDBY/OPER (N) | NA | | 0 | 1 |
| SERVO ON (N) | NA | | 0 | 1 |

PERIPHERAL CONTROL

| RDASC1/RDASC2 (N) | 0 | 1 |
|---|---|---|
| 5A3K6 (AC POWER SWITCHING) | EN | DE-EN |
| 5A3K7 (PED DISPLAY SWITCH) | EN | DE-EN |

ANXAE074

TRUTH TABLE

NX1977

Figure FO5-32. Redundant Switching (Sheet 3 of 8)

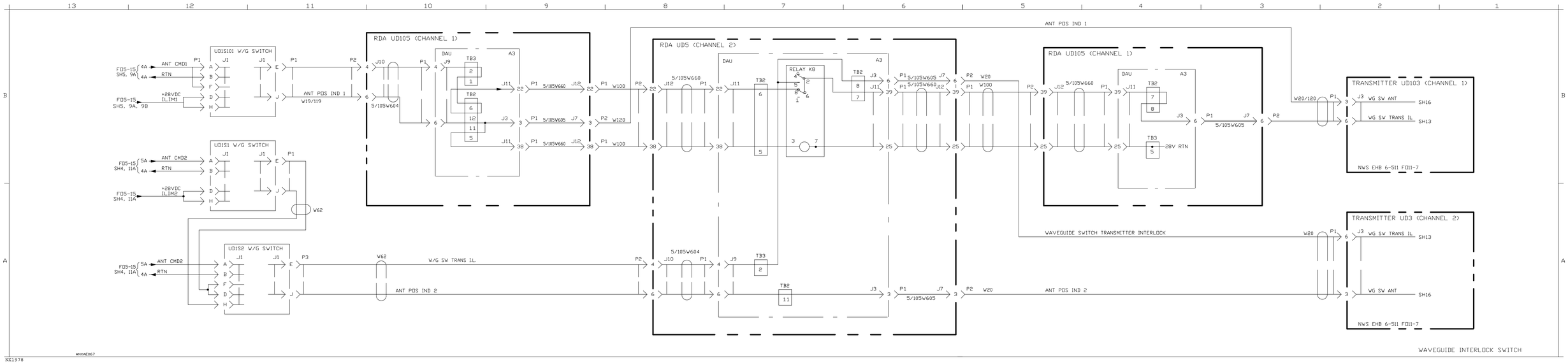


Figure FO5-32. Redundant Switching (Sheet 4 of 8)

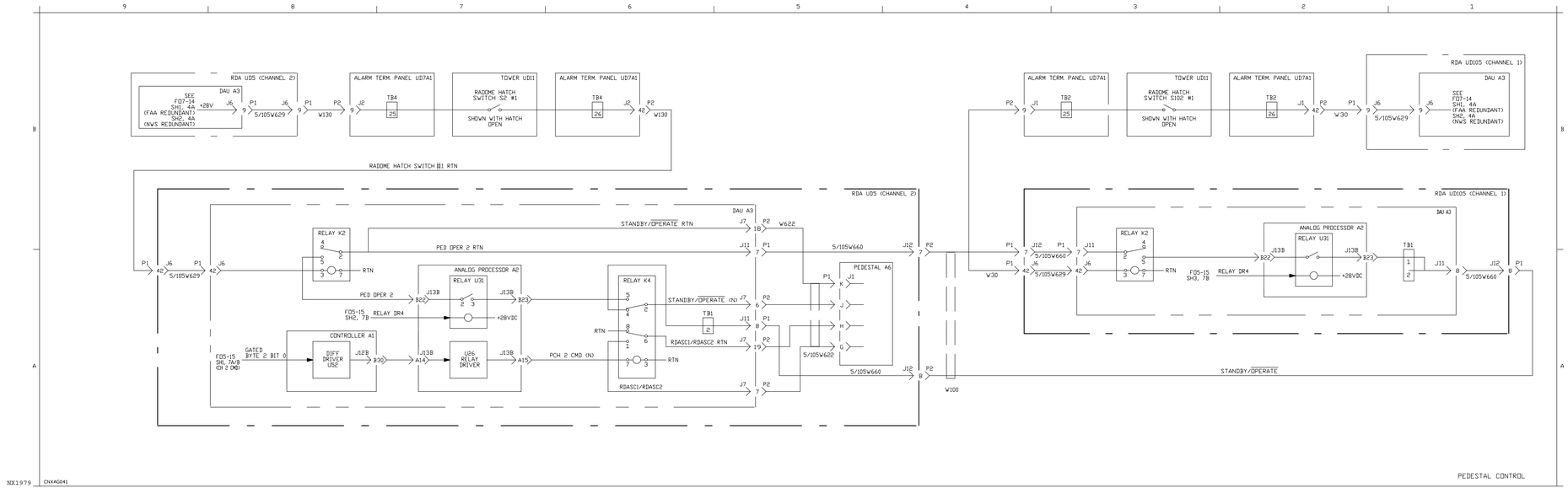


Figure FO5-32. Redundant Switching (Sheet 5 of 8)

**FP-5-485/(FP-5-486 blank)**

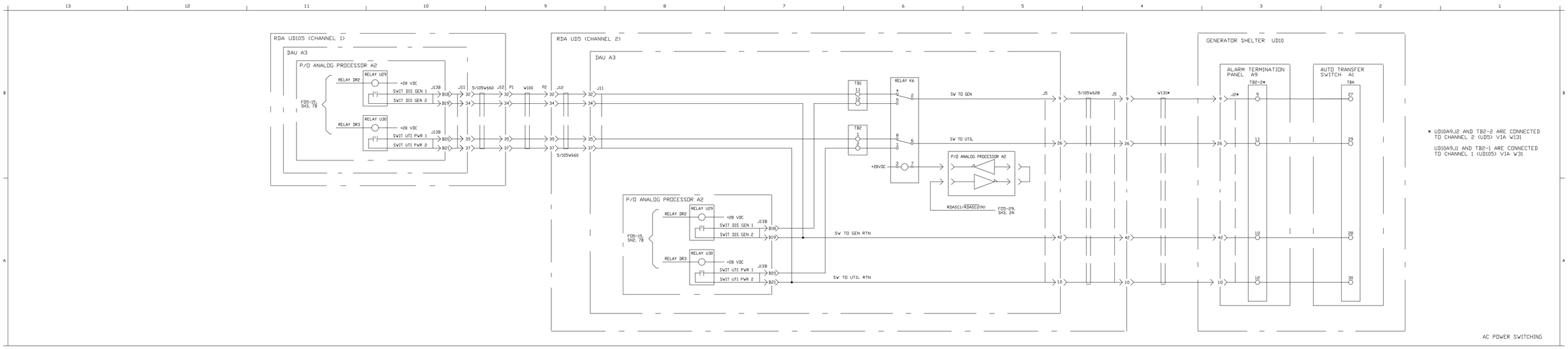


Figure FO5-32. Redundant Switching (Sheet 6 of 8)

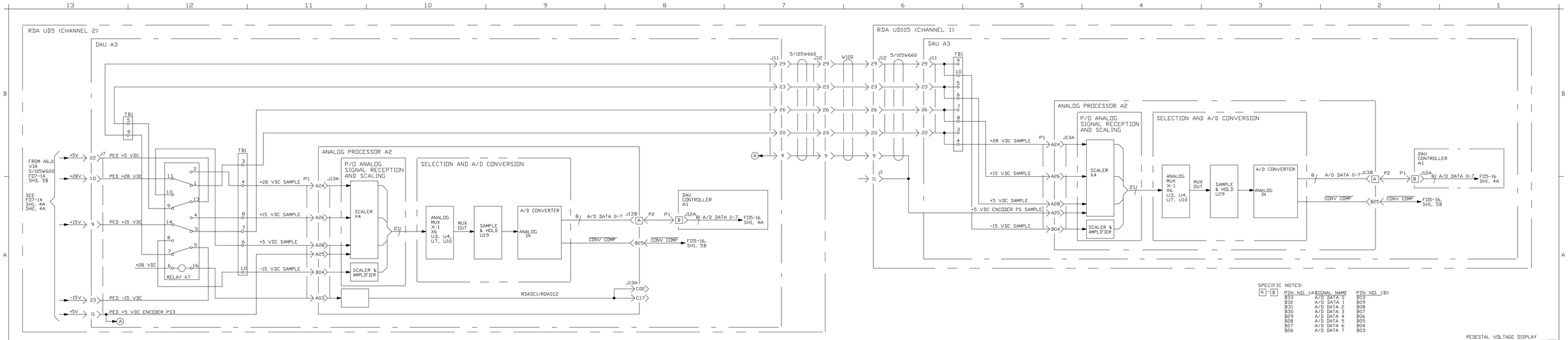


NX1981

Figure FO5-32. Redundant Switching (Sheet 7 of 8)

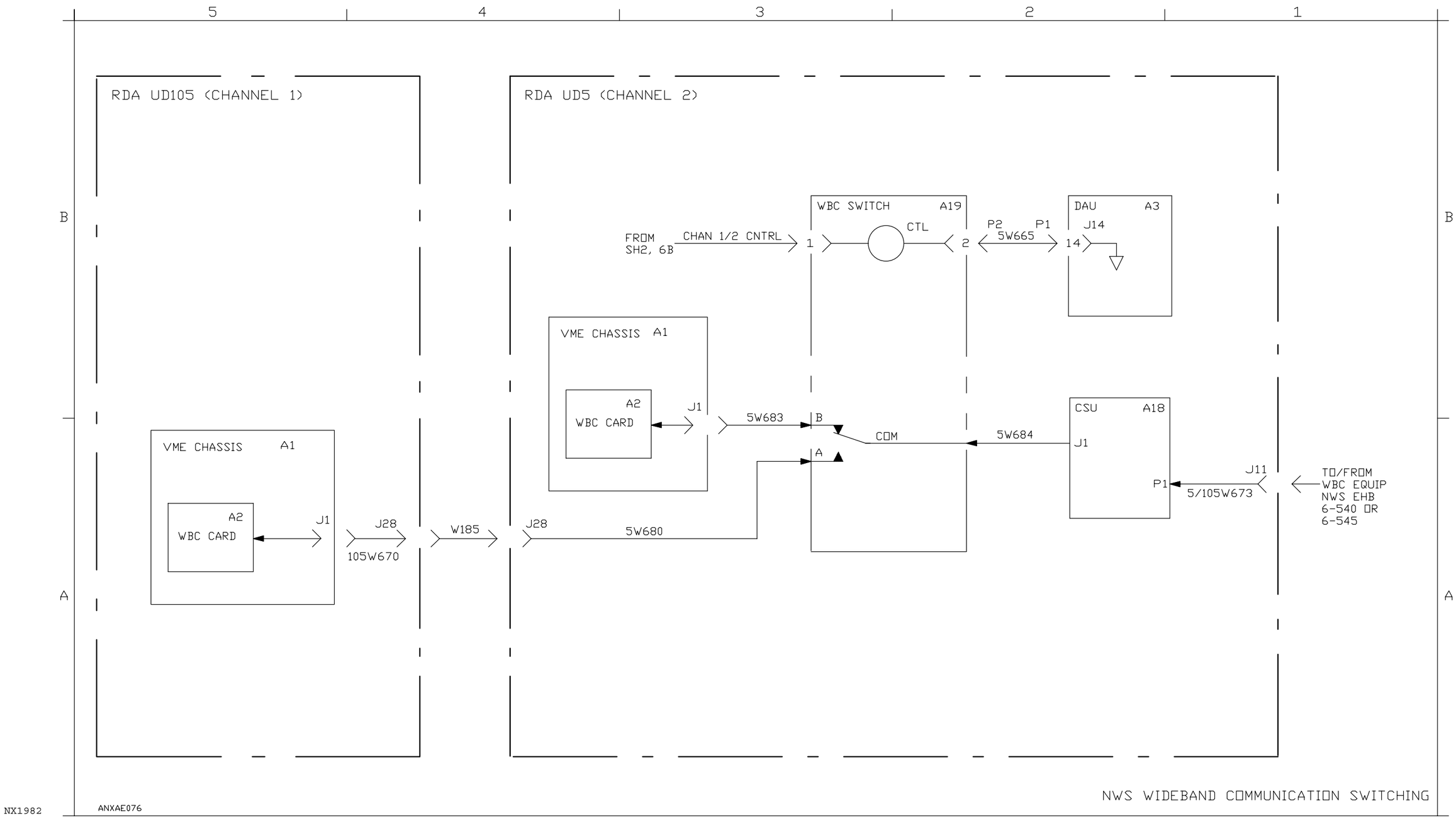


Figure FO5-32. Redundant Switching (Sheet 8 of 8)

# CHAPTER 6

# MAINTENANCE

## Section 6-1. Introduction

6-1.1 GENERAL.

This section provides an introduction to the WSR-88D on-site maintenance activities, as well as a general description of the WSR-88D site maintenance concept. The chapter is organized to support rapid identification and location of the maintenance data required to implement the field maintenance activities and contains the following sections:

- Section 6-1 - Introduction
- Section 6-2 - Preventive Maintenance
- Section 6-3 - Primary Fault Isolation
- Section 6-4 - Secondary Fault Isolation
- Section 6-5 - Replacement and Setup Procedure
- Section 6-6 - Alignments and Adjustments

The purpose and use of the data and procedures is described in each of these sections. The following paragraphs explain the purpose of Sections 6-2 through 6-6.

**NOTE**

This chapter and corresponding sections refer to the RDA Data Processor (RDADP) as UD5, the Receiver as UD4, the Transmitter as UD3, and the Waveguide Pressurization Unit as UD6. Unless otherwise specified, the information also applies to redundant systems UD105, UD104, UD103, and UD106.

6-1.1.1 Maintenance Concept. The WSR-88D organizational-level maintenance is based on minimizing system downtime in support of the operational requirement for the radar system. Federal Aviation Administration (FAA) and National Weather Service (NWS) redundant system configurations further reduce downtime by allowing one channel to operate normally while troubleshooting and corrective maintenance are performed on the other channel. The system can operate normally while replacements for failed parts are being shipped to the site. Even some sections of the system which are not redundant can have downtime shortened. A failed part can temporarily be replaced with an identical part from the non-controlling channel redundant section of the radar. For example, a Principal User Processor (PUP) Direct Memory Interface (DMI) board UD41A16A5 which failed could be temporarily replaced by the DMI board UD105A12A5 in Channel 1 if Channel 2 was the controlling channel, until a replacement board arrived at the site from the depot. Preventive maintenance should be performed on the non-controlling channel whenever possible, thus allowing the system to operate normally. The maintenance approach makes

maximum use of built-in-test equipment (BITE), on-line status and performance monitoring, and off-line diagnostic programs. This is accomplished through the use of detailed flow diagrams for performing operational checks and fault isolation, and providing detailed instructions for the replacement and adjustment of site replaceable units.

6-1.1.1.1 General Maintenance. The general maintenance approach is to centrally monitor system performance at the Radar Data Acquisition (RDA), Radar Product Generation (RPG), and Principal User Processor (PUP) levels to localize failures through the use of software and hardware maintenance features, and replaces the failed site replaceable unit from on-site spares whenever available. The actual repair of a replaced item will be performed either in a designated on-site repair area with equipment not part of the operational system or at a depot.

6-1.1.1.2 On-Site Maintenance. On-site maintenance consists primarily of removal and replacement of failed line or site replaceable units (LRUs or SRUs). A line replaceable unit (LRU) is defined as a self-contained unit/module assembly to which a fault can be isolated so that system fault isolation as well as removal and replacement can all take place within the LRU maintainability requirements. Site repairable assemblies (SRAs) contain components such as panel meters, indicators, and switches that may also be isolated and replaced using standard shop practices. On-site maintenance will be of two types: organizational and off-equipment.

6-1.1.1.3 Organizational Maintenance. Organizational maintenance action will consist primarily of removal and replacement of LRUs. However, where simple tests or repairs can be made to LRUs, such as repair or replacement of blowers, circuit breakers, fuses, cables, lamps, switches, etc., organizational maintenance personnel will perform these repairs using standard shop troubleshooting and repair procedures.

**NOTE**

When performing maintenance procedures, ensure each cable disconnected is tagged. Example: UD5A12A14J2 PSPI

6-1.1.1.4 Off-Equipment Maintenance. Off-equipment maintenance to be performed on site consists of periodic maintenance. Periodic maintenance will include adjustments, recalibrations, and other servicing which cannot be done while the LRU or other assembly is attached to the unit.

6-1.1.2 On-Line Status and Performance Monitoring. An extensive capability for on-line status and performance monitoring has been incorporated into the system design, using BITE to monitor critical system parameters and hardware status. In addition, the operational programs continuously monitor operation by means of self-tests and repetitive evaluation of communication links and data processor operation. The results of this on-line status and performance monitoring activity are presented for readout at both the PUP workstation color monitors and at each of the alphanumeric terminals in the form of status, error, or alarm messages. Listings of these messages and instructions for responding to them are contained in Section 6-3. For general information describing system commands and messages, including format and syntax rules, refer to Chapter 4.

6-1.1.3 Transient Fault Recovery Procedures. In some instances, transient conditions may cause error messages or alarms to be presented to the operator, or operating errors may result in a temporarily inoperative state (keyboard lockup, communication link disconnect, etc.). For these

conditions, the associated messages, quick-checks, and recovery procedures have been provided in both the Operator's Manual and in Chapter 4 of this manual. The occurrence of a non-recoverable error condition or system alarm provides the starting point for fault isolation and corrective maintenance activity.

### 6-1.2 PREVENTIVE MAINTENANCE PROCEDURES.

WSR-88D system preventive maintenance procedures are provided to support the continuing operational availability of the system by minimizing the effects of ambient environmental conditions and detecting and correcting for the effects of continued operational use wear and tear. Preventive maintenance tasks are scheduled for performance on a periodic basis, and consist primarily of routine inspections, cleaning, lubrication, servicing, and operational checks. The WSR-88D automated performance monitoring function minimizes the need for periodic system and parameter checks. Most WSR-88D components require a minimal level of preventive maintenance. Section 6-2 contains the schedule and procedures for the accomplishment of all required RDA preventive maintenance actions.

### 6-1.3 PRIMARY FAULT ISOLATION AND OPERATIONAL CHECKS.

Upon detection of an abnormal condition, the maintenance technician should verify the existence of a problem by observing system performance and/or performing an operational check. An operational check procedure flowchart is provided for this purpose in Section 6-3. Once the existence of a problem is confirmed, use the fault isolation flowcharts in Section 6-3. The fault isolation flowcharts use both on-line and off-line diagnostic techniques to isolate the faulty line replaceable unit. On-line diagnostics use the system status changes and specific system alarms. Off-line diagnostic programs are specified from the fault isolation flowcharts as required.

### 6-1.4 SECONDARY FAULT ISOLATION.

In a few cases, secondary fault isolation is required to isolate the fault to a lower LRU ambiguity group. Section 6-4 provides instructions and flowcharts for secondary fault isolation.

### 6-1.5 CORRECTIVE MAINTENANCE.

Corrective maintenance procedures consist of LRU and/or SRA component replacement, and any associated adjustments and alignments. Section 6-5 contains replacement procedures for all organizational items requiring detailed instructions beyond standard shop practices. Procedures are also provided for all unique setup and strapping requirements, and follow-up operational checks. Section 6-5 also contains specific equipment shutdown and startup instructions required to safely perform organizational-level replacement, including program termination and restart procedures. If replacement of an asset fails to correct the problem, an interconnection or wiring problem may exist. Chapter 7 contains interconnection diagrams, cabling data, and power distribution diagrams to facilitate point-to-point troubleshooting of this type of problem. When a component fault occurs in a site repairable assembly, standard shop practices for component circuit troubleshooting are employed. The detailed functional diagrams in Chapter 5 and associated commercial manuals may be used to troubleshoot these circuits and to isolate the faulty components.

### 6-1.6 ALIGNMENTS AND ADJUSTMENTS.

Some site replaceable units require adjustment or alignment following their replacement. Section 6-6 contains an index which identifies these assets. Reference to any related adjustment/alignment procedures is also provided in the specific component replacement instructions in Section 6-5. Section 6-6 contains the alignment/adjustment procedures.

### 6-1.7 COMPONENT LOCATION AND IDENTIFICATION.

The Illustrated Parts Breakdown (IPB) manual, NWS EHB 6-501, provides indexed illustrations that may be used for identification and location of all site replaceable units. The IPB also contains complete parts ordering data and a reference designation index. Supplemental pictorial data is provided in this chapter or related commercial manuals, as required, to support specific maintenance procedures.

### 6-1.8 USE OF COMMERCIAL MANUALS.

Commercial manuals are provided in the WSR-88D technical manual set for selected equipment and peripheral devices. These manuals contain useful reference and descriptive information, but should not be used in place of information contained in this chapter. Only those commercial manual maintenance procedures referenced from within this document should be used for WSR-88D RDA field maintenance. Specific references are provided, as required, in the appropriate sections of this chapter.

### 6-1.9 TOOLS, TEST EQUIPMENT AND CONSUMABLES.

The tools, test equipment, and consumable items required for each maintenance procedure are specified at the beginning of each procedure. A complete listing of all tools, test equipment, and consumables required for all site maintenance activities is contained in the WSR-88D System Manual, EHB 6-500.

### 6-1.10 SYSTEM STARTUP AND SHUTDOWN PROCEDURES.

Section 6-5.3 contains the startup and shutdown procedures required for complete site shutdown and system startup after a complete shutdown has been performed. Section 6-5.3 also contains a listing of circuit breakers found in the RDA. These procedures ensure that all operational switches are in the correct state for proper startup. The individual sections of this maintenance chapter provide specific instructions for partial or limited shutdown as required for each preventive or corrective maintenance action.

**WARNING**

Always secure primary cabinet power at the specified power distribution panel before attempting to replace internal components, or performing internal or external cleaning activities.

### 6-1.1 1 DIAGNOSTIC TEST PROGRAM PROCEDURES.

Chapter 4 contains a description of the diagnostic test programs used in connection with WSR-88D LRU fault isolation. Chapter 4 also contains procedures for loading, initializing, and running the various diagnostic routines. These procedures are not intended to be performed on a standalone or impromptu basis. Correct results from the use of these programs can only be obtained when the test programs are executed in accordance with the instructions contained in Section 6-3. This is because the flowcharts and associated notesheets establish the correct conditions for invoking the test and interpreting the results in an orderly sequence to ensure meaningful results.

# Section 6-2. Preventive Maintenance

## 6-2.1 INTRODUCTION.

This section contains the RDA periodic preventive maintenance procedures required to prolong the life of the RDA equipment and to ensure optimum operational time. It provides a method for detecting equipment deterioration caused by environmental conditions. Table 6-1 lists the preventive maintenance inspection (PMI) procedures applicable to the RDA. Refer to NWS EHB 6-503, Inspection, Lubrication, and Maintenance Requirements manual for a complete listing of all NEXRAD PMIs and NWS EHB 6-503-2, PMI Work Cards, for the actual PMI procedures. Although located at the RDA site, PMIs for Real Property Installed Equipment (RPIE), such as the generator, air conditioners, shelter (RDA, Radome, Generator, and TPMS) ventilation systems, fire detection, and TPS equipment are covered in NWS EHB 6-550 and 6-553 (redundant) manuals. For safety purposes, two technicians are normally required to perform PMIs on the RDA equipment.

**NOTE**

This section refers to the RDADP as UD5, the Receiver as UD4, the Transmitter as UD3, and the Waveguide Pressurization Unit as UD6. Unless otherwise specified, the information also applies to redundant systems UD105, UD104, UD103, and UD106.

Table 6-1. RDA Preventive Maintenance Index

| Equipment | Procedure Description | Periodicity | Time Required (Hours) | NWS EHB 6-503-2 Work Card |
|---|---|---|---|---|
| RDADP SCSI UD5A5 | SCSI Tape Drive Unit UD5A5A1 inspection and cleaning | 1 month | 0.1 | 2-002 |
| RDADP TODY Clock UD5A12A20A1 | RDA TODY Clock Calendar time check | 1 month | 0.2 | 2-003 |
| RDADP Level II Recorder UD16 | Level II Recorder clean | 1 month | 0.4 | 2-005 |
| Receiver UD4 | Suncheck measurement | 1 month | 0.3 | 2-008 |
| Receiver UD4 | CW Substitution Reflectivity error check | 3 months | 1.4 | 2-018 |
| Receiver UD4 | Minimum Discernible Signal (MDS) check | 3 months | .8 | 2-019 |

- - - - -

* Site Dependent

** It takes a combined 3.7 hours to perform cards 2-028, 2-038, and 2-039.

Table 6-1. RDA Preventive Maintenance Index (continued)

| Equipment | Procedure Description | Periodicity | Time Required (Hours) | NWS EHB 6-503-2 Work Card |
|---|---|---|---|---|
| Antenna/ Pedestal UD2 | Slip Ring Assembly UD2A1A2 inspection and cleaning | 3 months | 1.2 | 2-020 |
| Receiver UD4 and RDA Data Processor UD5 | Receiver UD4 and RDA Data Processor UD5 cabinet inspection and cleaning | 6 months | 1.0 | 2-026 |
| Digital Control Unit UD5A6 | Preventive Inspection | 6 months | 0.3 | 2-026 and NWS EHB 6-513* /NWS EHB 6-514* Table 3-5 |
| Power Amplifier Unit UD5A7 | Preventive Inspection | 6 months | 0.3 | 2-026 and NWS EHB 6-513* /NWS EHB 6-514* Table 4-3 |
| Transmitter UD3 | Transmitter UD3 inspect, clean, and test | 6 months | 1.8 | 2-027 |
| Antenna/ Pedestal UD2 | Antenna/Pedestal Service | 6 months | 1.0** | 2-028 and |
| | 1. Antenna/Pedestal inspect and clean | | | 2-028(A) |
| | 2. Radome Heaters inspect, clean, and test | | | 2-028(B) |
| | 3. Azimuth Gearbox Oil Collection Bottle | | | 2-028(C) |
| | 4. Safety Wire Check | | | 2-028(D) |
| | 5. Azimuth Gearbox Oil Change | | | 2-028(E) |

- - - - -

* Site Dependent

** It takes a combined 3.7 hours to perform cards 2-028, 2-038, and 2-039.

Table 6-1. RDA Preventive Maintenance Index (continued)

| Equipment | Procedure Description | Periodicity | Time Required (Hours) | NWS EHB 6-503-2 Work Card |
|---|---|---|---|---|
| Antenna/ Pedestal UD2 | Azimuth and Elevation DC Servo Motor brushes inspect and clean | 6 months | 0.5 | 2-034 |
| RDA Group | RDA Group system ground inspection and test | 12 months | 1.0 | 2-035 |
| Transmitter UD3 | Transmitter UD3 Oil Dielectric Strength Test Performance | 12 months | 0.4 | 2-036 |
| Waveguide Pressurization Unit UD6 | Waveguide Pressurization Unit UD6 Pressurization Pressure Check | 12 months | 0.4 | 2-037 |
| Antenna/ Pedestal UD2 | Antenna/Pedestal base and riser bolt torque and level check | 12 months | 0.5** | 2-038 |
| Antenna/ Pedestal UD2 | Antenna/Pedestal Service | 12 months | 2.2** | 2-039 |
| | 1. Elevation Bearings/ Output Pinion Bearings/Bullgear lubrication and Counterweight inspection | | | 2-039 (B) FSP (C) LPP |
| | 2. Safety Wire Check | | | 2-039(D) |
| | 3. Elevation Gearbox Oil Change | | | 2-039(E) |
| | 4. Azimuth Bearing Oil Reservoir Oil Change | | | 2-039(F) |
| RDADP Level II Recorder UD16 | Level II Recorder clean | 12 months | 0.3 | 2-044 |
| Transmitter UD3 | RF Radiation Leakage check | 12 months | 0.3 | 2-047 |

- - - - -

* Site Dependent

** It takes a combined 3.7 hours to perform cards 2-028, 2-038, and 2-039.

# Section 6-3. Primary Fault Isolation

## 6-3.1 INTRODUCTION.

This section contains the instructions and procedures necessary to perform primary fault isolation in the RDA functional area. It includes a set of fault isolation flowcharts with notes to aid the fault isolation process.

**NOTE**

This section refers to the RDADP as UD5, the Receiver as UD4, the Transmitter as UD3, and the Waveguide Pressurization Unit as UD6. Unless otherwise specified, the information also applies to redundant systems UD105, UD104, UD103, and UD106.

## 6-3.2 FAULT ISOLATION FLOWCHARTS.

The main resource in fault isolation is the flowcharts. They make use of system alarms and status messages to detect faults and use on-line as well as off-line isolation techniques to isolate faults to a single LRU. When a failure of a diagnostic test is encountered, it is good practice to run the test several times to get some idea of the statistical behavior of the fault before performing LRU replacement procedures, if necessary.

6-3.2.1 System Fault Isolation Flowchart. Included with the RDA fault isolation flowcharts is a system fault isolation flowchart. The system fault isolation flowcharts (Figure 6-1) ensure that the technician performs fault isolation in the correct functional area. If any question arises as to what functional area is causing the problem, the system flowcharts will lead to the correct area.

6-3.2.2 RDA Fault Isolation Flowcharts. The RDA fault isolation flowcharts are designed to isolate a fault down to a single LRU. Figure 6-2, sheet 1 is an RDA operability test; sheet 2 is a quick reference chart for faults. Sheet 3 contains RDA Inoperative (INOP) alarms. Sheets 4 through 13 contain transmitter fault isolation, while antenna/pedestal fault isolation is performed on sheets 14 through 21. Sheets 22 through 29 contain fault isolation on the receiver and signal processor. All fault isolation on the RDA data processor is on sheets 30 through 41. Maintenance mandatory alarms are covered on sheets 42 through 47; maintenance required alarms are on sheets 48 through 50. The fault isolation for the DAU is on sheet 51 and finishing up with RDA redundancy fault isolation on sheets 52 through 57. The Archive II fault isolation can be found on sheet 1 of FO7-5, NWS EHB 6-560. These different areas interrelate and are cross-referenced.

6-3.2.3 Operability Test. The RDA operability test is designed to completely check and exercise the RDA while keeping it on-line. The operability test will often be the entry point for fault isolation. The operability test is indicated as a thick line, called the “no-fault” line. Any time the direction requires abandoning the heavy “no-fault” line as indicated by a narrow line, fault isolation is being undertaken. If the no-fault line is never left and the RDA operability check is completed, the RDA is fully functional and no fault isolation is necessary.

6-3.2.4 Quick Reference Chart. Many times a fault will give such an obvious symptom that the operability check is unnecessary. Sheet 2 of the fault isolation flowchart is a list of the obvious

RDA faults and directs the technician to the appropriate area to begin fault isolation. Its purpose is to reduce repair time to a minimum. An area where it is also very useful is when cross-referencing between RDA functional areas takes place. Not all problems can be solved using the Quick Reference Chart, and, if it is of no use on a particular fault, the operability test on sheet 1 should be used.

6-3.2.5 Flowchart Comments. Included throughout the flowcharts are comments. These comments are included to aid the technician. Due to the complexity and cross-referencing of pages, a technician may not realize or may forget what has already been established in previous steps. These comments keep technicians informed of what has been learned and/or what will be tried next to fault isolate.

6-3.2.6 Flowchart Notesheets. Included with the flowcharts are cross-referenced notesheets. The notesheets give instruction on performing diagnostic procedures or provide definitions. Some of the procedures encountered are included elsewhere in the manual; if this is the case, the notesheets will simply reference the technician to another part of the manual.

6-3.2.7 Secondary Fault Isolation. Occasionally, when primary fault isolation is completed, a group of two or more LRUs are encountered. For each one of these groups, a secondary fault isolation procedure has been included in Section 6-4 to complete fault isolation to a single LRU.

6-3.2.8 Flowchart Symbol Convention. All circled letters on the flowcharts indicate a reference to another part of the flowchart. All circled numbers are references to the notesheets which must be run before proceeding to the next step. All boxed characters are references to secondary fault isolation procedures (Section 6-4 ). Examples are illustrated below:

| | |
|---|---|
| (A) | Reference to another part of flowcharts |
| (3) | Reference to notesheets |
| [RDAN] | Reference to secondary fault isolation procedures where (N) is a specific number. |

In addition, the flowcharts are arranged so that all actions that must be performed are in boxes and all questions are in diamonds.

6-3.2.9 Cabling and Connector Problems. It should be noted that, in addition to the LRUs listed in the flowcharts, cabling and connector problems associated with the LRUs can cause the trouble symptoms noted. If replacement of the LRU fails to fix the problem, then cabling and connectors associated with the LRU identified to be faulty should be carefully examined. They are not specifically mentioned in the flowcharts because their inclusion would make the flowcharts unduly bulky. Necessary wiring data is contained in Chapter 7.

6-3.3 FLOWCHART NOTES.

Table 6-2 lists the flowchart notes referenced in Figure 6-1 and Figure 6-2. Figure 6-1 incorporates the UD70/170 RPG and UD71 MSCF. The notes are indicated by numerals within circles on the flowcharts.

6-3.4 RDA ALARMS.

Table 6-3 through Table 6-6 list all the alarms generated by the RDA application software CPCI 01. The alarms are normally displayed at the RDA applications terminal screen in the four-position alarm area. Changes in RDA alarms are also transmitted to the RPG for recording in the System Status file. The alarms are listed alphabetically in the alarm column of each table. The description column contains a short description of the alarm unless the function of the alarm is self-explanatory.

6-3.4.1 Alarm Types. The type of alarm column identifies the alarm as an edge detected (ED), filtered occurrence (FO), or occurrence (OC) alarm. Edge detected alarms are displayed in the first three positions of the alarm area (both halves of the fifth line and left half of the sixth line). Edge detected alarms are displayed as long as the condition causing the alarm exists. Edge detected alarms cause the audible alarm in the RDA maintenance panel to sound (occurrence alarms do not). The alarm may be reset by the reset button on the panel. The alarm disappears from the terminal screen when the condition causing the alarm no long exists. Occurrence alarms are displayed once the condition causing the alarm exists, and remain displayed until another occurrence alarm succeeds it. Occurrence alarms can only be reset by reinitializing the RDA application software. The functional area column identifies the functional area in the RDA Summary Status area that will indicate a failure due to the alarm. The abbreviations used are as follows:

- XMT - Transmitter
- RSP - Receiver/Signal Processor
- CTR - RDA Control/RDASC
- WB - Wideband (Proceed to NWS EHB 6-545 Section 6-3 for fault isolation)
- UTL - Tower/Utilities (Proceed to NWS EHB 6-550 or NWS EHB 6-553 for redundant sites, Section 3-3 for fault isolation)
- PED - Antenna Pedestal
- ARC - Archive II
- RED - Redundant Channel

6-3.4.2 Alarm Categories and Maintenance Modes. The RDA alarms are categorized and divided into the tables listed below:

- Table 6-3 RDA Alarms - Inoperative
- Table 6-4 RDA Alarms - Maintenance Mandatory
- Table 6-5 RDA Alarms - Maintenance Required
- Table 6-6 RDA Alarms - Secondary Alarms

The first three tables sort the alarms according to the RDA state or maintenance mode forced by the subject alarm. Table 6-6 alarms are entitled secondary alarms since they invariably occur in association with another alarm. They are usually occurrence alarms. Each category of alarm is described in the following paragraphs.

6-3.4.2.1 Inoperative (INOP) Alarms. At the MSCF Workstation, INOP alarms are indicated in the RDA Alarms window on MSCF HCI, which contains color coded lists of the most recent RDA alarm messages. Red colored messages indicate INOP alarms. When detected by the RDA operational program, INOP alarms cause an interruption of the radar information gathering function. Partial equipment shutdown is initiated. Immediate maintenance action is necessary to restore the radar site to normal operation. Initiate fault isolation in Figure 6-2, sheet 3.

6-3.4.2.2 Maintenance Mandatory (MAM) Alarms. At the MSCF Workstation, MAM alarms are indicated in the RDA Alarms window on MSCF HCI, which contains color coded lists of the most recent RDA alarm messages. Orange colored messages indicate MAM alarms. An alarm in this category will probably result in contaminated or invalid radar information. However, radar signals are still processed and base products are sent from the RDA to the RPG. Immediate maintenance action is indicated, provided that the tactical situation permits it. Initiate fault isolation in Figure 6-2, sheet 42.

6-3.4.2.3 Maintenance Required (MAR) Alarms. At the MSCF Workstation, MAR alarms are indicated in the RDA Alarms window on MSCF HCI, which contains color coded lists of the most recent RDA alarm messages. Yellow colored messages indicate MAR alarms. This category of alarm indicates a fault has been detected in redundant hardware that does not result in a degradation of the base data products produced by the radar site. Maintenance action is indicated when feasible. Initiate fault isolation in Figure 6-2, sheet 48.

6-3.4.2.4 Secondary Alarms. At the MSCF Workstation, secondary (SEC) alarms are indicated on the MSCF HCI RDA Alarms window as tan colored messages. Alarms of this type do not force a maintenance mode (i.e., INOP, MNT MAN, or MAINT REQ) or cessation of application program functions. They are almost exclusively occurrence-type alarms, with many the result of software self-tests or monitoring checks. Occurrence alarms are displayed when the particular fault condition occurs, but the alarms are not cleared when the fault condition is removed, as in the case of edge-detected alarms. Occurrence alarms are cleared by reinitializing the RDA application program. Secondary alarms are often associated with a mode-forcing alarm for the purpose of conveying more information to the maintenance technician. If no maintenance mode is forced, initiate fault isolation in Figure 6-2, sheet 3.

6-3.5 RDASC ERROR MESSAGES.

1. The RDASC application program, CPCI 01 error messages which result in alarms being presented at the RDA maintenance terminal are generated by one of the following methods:
   a. The system status monitoring function utilizing BITE and hardware sensors to report hardware faults
   b. Program threshold criteria for evaluating the result of data processing and computations
   c. On-line software checks monitor the proper operation and execution of program commands and device responses.
2. The error messages can be grouped into several broad categories, based on the manner of detection or the source of the message. These categories are:

- Device initialization or input/output (I/O) errors
- Device status error/failure reports
- Wideband link hardware, status, or interface errors
- RDA hardware faults, based on sensor inputs
- Interface loop test errors
- Data computation or processing errors

3. During error message processing, the RDASC application program evaluates overall system status and initiates the appropriate operating status changes and corresponding operability state messages. The RDA alarm presented to the applications terminal is thus a combination of one or more specific error messages presented in the alarm area of the Main Menu, and the resultant RDA Operability State message presented in the STATE field of the Summary RDA Status area. The RDA status data is simultaneously displayed in the STATUS field of the Summary RDA Status area and changed, if necessary. Refer to NWS 6-510-1, paragraph 3 and Appendix A, pages A-2 and A-3 for a view of single channel and redundant systems main menu screens respectively. RDA STATUS and STATES allowed are:

| RDA STATUS (STAT) | RDA STATES |
|---|---|
| Startup (STUP) | On-line |
| Standby (STBY) | Shutdown (SHTDN) |
| Restart (RSTUP) | Inoperative (INOP) |
| Operate (OPER) | Maintenance Mandatory (MNT MAN) |
| Playback (PLYBK) | Maintenance Required (MNT REQ) |
| Off-Line Operate (OLOP) | |

4. The Summary RDA Status area of the Main Menu also presents hardware status data for the RDA functional elements. When a fault condition is detected, an alarm indicator is presented in the associated field. In a similar manner, when a wideband link (either RPG or User) failure is detected, a fail indicator is presented in the associated field. Thus, when a fault condition is detected by the RDA Status Monitoring function, the maintenance technician is presented at the maintenance terminal with a multifield data display that includes the specific triggering error (or alarm) message, and the related RDA STATE, STATUS, and hardware function alarm/fail indicators. The fault isolation flowcharts in Sections 6-3 and 6-4 utilize this data presentation to direct the technician to the appropriate tests and/or corrective actions.

6-3.6 PRIMARY FAULT ISOLATION FLOWCHARTS.

The fault isolation flowcharts which follow are required for the RDA Group. Figure 6-1 is the system fault isolation flowchart utilizing the MSCF and UD70/170 RPG. Figure 6-2 is the RDA fault isolation flowchart.

Table 6-2. Flowchart Note Index

| Flowchart Figure Number | Note Number | Description |
|---|---|---|
| Figure 6-1 | 1 | Definition |
| | 2 | Archive IV Check |
| | 3 | Exercise the Streaming Tape (PUP) |
| | 4 | Exercise the One Time Dial Up |
| | 5 | Issue a Wideband Disconnect/Connect |
| | 6 | Verify RPG HCI Functionality at MSCF Workstation, System Check |
| | 7 | Archive III Check From MSCF Workstation |
| | 8 | Check Jaz Drive Functionality |
| | 9 | Check Floppy Drive Functionality |
| | 10 | Check CD-ROM Drive Functionality |
| | 11 | Check Date/Time of MSCF, RPG, or BDDS From MSCF Workstation |
| | 12 | Exercise the Streaming Tape (RDA) |
| | 13 | OS/32 Error Messages |
| | 14 | Arithmetic Unit (AU) 1-3 Board Manipulation |
| | 15 | Sun Check |
| | 16 | Check for Narrowband (NB) Lines Connected at MSCF |
| Figure 6-2 | 1 | OS/32 Error Messages |
| | 2 | Exercise the Streaming Tape (RDA) |
| | 3 | Bring RDA to Operate with Command Operate |
| | 4 | Perform DAU Diagnostics |
| | 5 | Advisory Messages |
| | 6 | Bring Down CPCI 01 Program and Run RCVR Subtest 5 |
| | 7 | Perform the PFN Toggle Test |
| | 8 | Verify Waveform at Test Point UD3A10A1TP7 |
| | 9 | Perform RCVR Diagnostic Subtest 4 |

- - - - -

* Applicable to non-redundant systems and control channel of redundant systems.

Table 6-2. Flowchart Note Index (continued)

| Flowchart Figure Number | Note Number | Description |
|---|---|---|
| | 10* | Perform the Pedestal Diagnostics |
| | 11* | Perform Elevation Drive Out |
| | 12* | Check Azimuth Tach Voltage |
| | 13* | Perform Elevation Drive |
| | 14* | Perform Azimuth Drive Test |
| | 15 | Perform Receiver Diagnostics |
| | 16 | Definition of Basic Confidence Check |
| | 17 | Perform HSP Diagnostic Test |
| | 18 | Perform PSP Subtests 6, 11, 22, 31, and 32 |
| | 19 | Recycle RDA Power |
| | 20 | Preheat Timing Test |
| | 21 | Perform PSP Subtests Deselect 6, 11, 22, 31, and 32 |
| | 22 | Reconfigure CDS Software to Normal Configuration |
| | 23 | Procedure for Marking Disks On |
| | 24 | Procedure for Resetting Time |
| | 25 | Check CMM Status |
| | 26 | Perform a Memory Check |

- - - - -

* Applicable to non-redundant systems and control channel of redundant systems.

Table 6-2. Flowchart Note Index (continued)

| Flowchart Figure Number | Note Number | Description |
|---|---|---|
| Figure 6-2 | 27 | Check SELCH Busy |
| | 28 | Check Sync |
| | 29 | Transmitter RDA Performance Data |
| | 30* | EL Backlash Setting/Resetting |
| | 31* | AZ Backlash Setting/Resetting |
| | 32 | Check Synchronizer Triggers and Fault LEDs |
| | 33 | Observe the Elevation Position |
| | 34 | Perform Guard (+) Log Test |
| | 35 | Perform Guard (–) Log Test |
| | 36 | Check Other Pulsewidth |
| | 37 | Perform Phase Detector Test |
| | 38 | Run Pedestal Subtest 4 |
| | 39 | Run Transmitter with TESTSIG |
| | 40 | Check Adaptation Data |
| | 41 | Velocity/Spectrum Width Test Signal Check |
| | 42 | Run BTC-501/504 Test |
| | 43 | Statistical Multiplexer (STATMUX) Trunk Status Check |
| | 44 | LAL Pattern Test |
| | 45 | RDL Pattern Test |
| | 46 | STATMUX Port Status Check |

- - - - -

* Applicable to non-redundant systems and control channel of redundant systems.

Table 6-3. RDA Alarms - Inoperative

| ALARM | DESCRIPTION | TYPE OF ALARM | FUNCTIONAL AREA |
|---|---|---|---|
| AZIMUTH AMPLIFIER INHIBIT** | Self-explanatory | ED | PED |

- - - - -

* Applicable to non-redundant systems and control channel of redundant systems.

** Appears on non-redundant systems and control channel of redundant systems.

Table 6-3. RDA Alarms - Inoperative (continued)

| | | | |
|---|---|---|---|
| AZIMUTH HANDWHEEL ENGAGED** | Part of Ant/Ped bit data. Updated every 30 seconds. | ED | PED |
| AZIMUTH STOW PIN ENGAGED** | Part of Ant/Ped bit data. Updated every 30 seconds. | ED | PED |
| DAU INITIALIZATION ERROR | See Sections 5-8 and 5-12. | ED | CTR |
| DAU UART FAILURE | Validity check on RS-232 input to RDASC from DAU. | ED | CTR |
| ELEVATION AMPLIFIER INHIBIT** | Self-explanatory | ED | PED |
| ELEVATION HANDWHEEL ENGAGED** | Part of Ant/Ped bit data. Updated every 30 seconds. | ED | PED |
| ELEVATION STOW PIN ENGAGED | Part of Ant/Ped bit data. Updated every 30 seconds. | ED | PED |
| FILAMENT POWER SUPPLY OFF | Self-explanatory | ED | XMT |
| PED SERVO SWITCH FAILURE** | Part of Ant/Ped bit data. Updated every 30 seconds. | ED | PED |
| PEDESTAL DYNAMIC FAULT** | If Pedestal servo does not come to command position within 5 seconds, alarm is set; RDA state forced to STBY. Checked only at beginning of elevation cut. See paragraph 5-14.2.2. | ED | PED |
| PEDESTAL INITIALIZATION ERROR** | See sections 5-10 and 5-14. | ED | PED |
| PEDESTAL INTERLOCK OPEN** | Part of Ant/Ped bit data. Updated every 30 seconds. | ED | PED |
| PEDESTAL STOPPED** | See section 5-14. | ED | PED |
| PEDESTAL UNABLE TO PARK** | See section 5-14. | ED | PED |

- - - - -

* Applicable to non-redundant systems and control channel of redundant systems.

** Appears on non-redundant systems and control channel of redundant systems.

Table 6-3. RDA Alarms - Inoperative (continued)

| | | | |
|---|---|---|---|
| PFN/PW SWITCH FAILURE | Switch controls transmitter pulse width by selecting proper pulse forming network. | ED | XMT |
| RADOME ACCESS HATCH OPEN | Safety provision. See section 5-14. | ED | UTL |
| RDA CHANNEL CONTROL FAILURE | The receiver waveguide switch is controlled only from Channel 2 via the Channel 2 Command, and follows to the same position as the Channel 2 pedestal control, i.e., when Channel 2 has pedestal control, the receiver waveguide switch will connect the antenna receiver port to the Channel 2 RFE input. In the event the receiver waveguide switch is not connected to the channel in Operate, this alarm is set. | ED | CTR |
| SPS INITIALIZATION ERROR | See para. 5-5.5 and section 5-14. | ED | RSP |
| TRANSMITTER INOPERATIVE | Alarm is set after transmitter has gone through recycling process without clearing fault. LEDs on transmitter fault panel will indicate basic problem. | ED | XMT |
| TRANSMITTER HV SWITCH FAILURE | RDA program controls transmitter HV through switch action. | ED | XMT |
| WAVEGUIDE SWITCH FAILURE | Switches between antenna and dummy load. See para. 5-10.4. | ED | XMT |
| WAVEGUIDE/PFN TRANSFER INTERLOCK | See para. 5-10.4. | ED | XMT |
| XMTR IN MAINTENANCE MODE | Self-explanatory | ED | XMT |

- - - - -

* Applicable to non-redundant systems and control channel of redundant systems.

** Appears on non-redundant systems and control channel of redundant systems.

Table 6-4. RDA Alarms - Maintenance Mandatory

| ALARM | DESCRIPTION | TYPE OF ALARM | FUNCTIONAL AREA |
|---|---|---|---|
| A/D ±15V POWER SUPPLY 8 FAIL | LVPS dedicated to A/D converter | ED | RSP |
| A/D +5V POWER SUPPLY 2 FAILURE | LVPS dedicated to A/D converter | ED | RSP |
| A/D -5.2V POWER SUPPLY 7 FAIL | LVPS dedicated to A/D converter | ED | RSP |
| AC UNIT #1 COMPRESSOR SHUT OFF | Self-explanatory | ED | UTL |
| AC UNIT #1 DISCHARGE TEMP EXTREME | Self-explanatory | ED | UTL |
| AC UNIT #2 COMPRESSOR SHUT OFF | Self-explanatory | ED | UTL |
| AC UNIT #2 DISCHARGE TEMP EXTREME | Self-explanatory | ED | UTL |
| AIRCRAFT HAZARD LIGHTING FAILURE | Self-explanatory | ED | UTL |
| ANTENNA POWER BITE FAIL* | See para. 5-3.9.2.2 . | ED | CTR |
| ANTENNA POWER METER ZERO OUT OF LIMIT* | See para. 5-3.9.2.1 | ED | XMT |
| ANTENNA PEAK POWER HIGH* | See para. 5-3.9.2.3 | ED | XMT |
| ANTENNA PEAK POWER LOW* | See para. 5-3.9.2.3 | ED | XMT |
| ARCH2 LU ASSIGNMENT ERROR | Self-explanatory | ED | USR** |
| AZIMUTH AMP POWER SUPPLY FAIL* | Self-explanatory | ED | PED |
| AZIMUTH AMPLIFIER CURRENT LIMIT* | Over current condition detected | ED | PED |

- - - - -

* Appears on non-redundant systems and control channel of redundant systems.

** Reassigned to USR Functional Area in RDA Alarms window on MSCF HCI for UD70/170 RPG.

Table 6-4. RDA Alarms - Maintenance Mandatory (continued)

| ALARM | DESCRIPTION | TYPE OF ALARM | FUNCTIONAL AREA |
|---|---|---|---|
| AZIMUTH AMPLIFIER OVERTEMP* | Self-explanatory | ED | PED |
| AZIMUTH ENCODER LIGHT FAILURE* | Self-explanatory | ED | PED |
| AZIMUTH GEARBOX OIL LEVEL LOW | Self-explanatory | ED | PED |
| AZIMUTH MOTOR OVERTEMP | Self-explanatory | ED | PED |
| AZIMUTH PCU DATA PARITY FAULT | Parity fault detected on antenna position control data. | ED | PED |
| BULL GEAR OIL LEVEL LOW | See section 5-11. | ED | PED |
| BYPASS MAP FILE READ FAILED | Self-explanatory | ED | CTR |
| CIRCULATOR OVERTEMP | See para. 5-10.4.4 | ED | XMT |
| COHO CLOCK FAILURE | COHO reference signal out of tolerance. Alarm produced by frequency generator. | ED | RSP |
| DAU A/D HIGH LEVEL OUT OF TOLERANCE | Checks A/D Converter in DAU with +4.8 Vdc input | ED | CTR |
| DAU A/D LOW LEVEL OUT OF TOLERANCE | Checks A/D Converter in DAU with 0.2 Vdc input | ED | CTR |
| DAU A/D MID LEVEL OUT OF TOLERANCE | Checks A/D Converter in DAU with +2.5 Vdc input | ED | CTR |
| DISABLE/ENABLE/AUTO SWITCH NOT IN AUTO | Self-explanatory. See section 5-14. | ED | CTR |
| ENCODER +5V POWER SUPPLY FAIL | Self-explanatory | ED | PED |

- - - - -

* Appears on non-redundant systems and control channel of redundant systems.

** Reassigned to USR Functional Area in RDA Alarms window on MSCF HCI for UD70/170 RPG.

Table 6-4. RDA Alarms - Maintenance Mandatory (continued)

| ALARM | DESCRIPTION | TYPE OF ALARM | FUNCTIONAL AREA |
|---|---|---|---|
| ELEVATION + NORMAL LIMIT* | Antenna elevation within 0.8 degrees of upper dead limit. See section 5-11. | ED | PED |
| ELEVATION - NORMAL LIMIT* | Antenna elevation within 0.8 degrees of lower dead limit. See section 5-11. | ED | PED |
| ELEVATION AMP POWER SUPPLY FAIL* | Self-explanatory | ED | PED |
| ELEVATION AMPLIFIER OVERTEMP* | Self-explanatory | ED | PED |
| ELEVATION AMPLIFIER CURRENT LIMIT* | Self-explanatory | ED | PED |
| ELEVATION ENCODER LIGHT FAILURE* | Self-explanatory | ED | PED |
| ELEVATION GEARBOX OIL LEVEL LOW* | Self-explanatory | ED | PED |
| ELEVATION IN DEAD LIMIT* | Self-explanatory | ED | PED |
| ELEVATION MOTOR OVERTEMP* | Self-explanatory | ED | PED |
| ELEVATION PCU DATA PARITY FAULT* | Parity fault detected in antenna position control data. | ED | PED |
| EQUIPMENT SHELTER TEMP EXTREME | Self-explanatory | ED | PED |
| FILAMENT POWER SUPPLY VOLTAGE FAIL | Self-explanatory | ED | XMT |
| FLYBACK CHARGER FAILURE | Self-explanatory | ED | XMT |
| FOCUS COIL AIRFLOW FAILURE | Self-explanatory | ED | XMT |

- - - - -

* Appears on non-redundant systems and control channel of redundant systems.

** Reassigned to USR Functional Area in RDA Alarms window on MSCF HCI for UD70/170 RPG.

Table 6-4. RDA Alarms - Maintenance Mandatory (continued)

| ALARM | DESCRIPTION | TYPE OF ALARM | FUNCTIONAL AREA |
|---|---|---|---|
| FOCUS COIL CURRENT FAILURE | Focus coil power suppression output current abnormal. | ED | XMT |
| FOCUS COIL POWER SUPPLY VOLTAGE FAIL | Self-explanatory | ED | XMT |
| GEN STARTING BATTERY VOLTAGE LOW | Self-explanatory | ED | UTL |
| GENERATOR ENGINE MALFUNCTION | Self-explanatory | ED | UTL |
| GENERATOR EXERCISE FAILURE | Self-explanatory | ED | UTL |
| GENERATOR SHELTER TEMP EXTREME | Self-explanatory | ED | UTL |
| HWSP END AROUND TEST ERROR | See para. 5-5.5. | ED | RSP |
| I CHANNEL BIAS OUT OF LIMIT | See para. 5-4.9.5. | ED | RSP |
| I/Q AMP BALANCE DEGRADED | See para. 5-4.9.6.1. | ED | RSP |
| I/Q PHASE BALANCE DEGRADED | See para. 5-4.9.6.1. | ED | RSP |
| IF ATTEN CAL INHIBITED-INVALID DATA | See para. 5-4.9.6. | ED | RSP |
| IF ATTEN CALIBRATION SIGNAL DEGRADED | See para. 5-4.9.6. | ED | RSP |
| IF ATTEN STEP SIZE DEGRADED | See para. 5-4.9.6. | ED | RSP |
| INVERSE DIODE CURRENT UNDERVOLTAGE | Self-explanatory | ED | XMT |
| ISU PERFORMANCE DEGRADED | See para. 5-4.9.7.4. | ED | RSP |

- - - - -

* Appears on non-redundant systems and control channel of redundant systems.

** Reassigned to USR Functional Area in RDA Alarms window on MSCF HCI for UD70/170 RPG.

Table 6-4. RDA Alarms - Maintenance Mandatory (continued)

| ALARM | DESCRIPTION | TYPE OF ALARM | FUNCTIONAL AREA |
|---|---|---|---|
| KLYSTRON AIR FLOW FAILURE | Self-explanatory | ED | XMT |
| KLYSTRON AIR OVERTEMP | Self-explanatory | ED | XMT |
| KLYSTRON FILAMENT CURRENT FAIL | Self-explanatory | ED | XMT |
| KLYSTRON OVERCURRENT | Self-explanatory | ED | XMT |
| KLYSTRON VACION CURRENT FAIL | Klystron vacuum pump current abnormal, indicating poor Klystron vacuum | ED | XMT |
| LIN CHAN CLUTTER REJECTION DEGRADED | See para. 5-4.9.4 . | ED | RSP |
| LIN CHAN GAIN CAL CHECK DEGRADED | See para. 5-4.9 . | ED | RSP |
| LIN CHAN GAIN CAL CONSTANT DEGRADED | See para. 5-4.9 . | ED | RSP |
| LIN CHAN KLY OUT TEST SIGNAL DEGRADED | See para. 5-4.9 . | ED | RSP |
| LIN CHAN NOISE LEVEL DEGRADED | See para. 5-4.9 . | ED | RSP |
| LIN CHAN RF DRIVE TST SIGNAL DEGRADED | See para. 5-4.9 . | ED | RSP |
| LIN CHAN TEST SIGNALS DEGRADED | See para. 5-4.9 . | ED | RSP |
| LOG CHAN CAL CHECK DEGRADED | See para. 5-4.9 . | ED | RSP |
| LOG CHAN CLUTTER REJECTION DEGRADED | See para. 5-4.9 . | ED | RSP |
| LOG CHAN GAIN CAL CONSTANT DEGRADED | See para. 5-4.9 . | ED | RSP |

- - - - -

* Appears on non-redundant systems and control channel of redundant systems.

** Reassigned to USR Functional Area in RDA Alarms window on MSCF HCI for UD70/170 RPG.

Table 6-4. RDA Alarms - Maintenance Mandatory (continued)

| ALARM | DESCRIPTION | TYPE OF ALARM | FUNCTIONAL AREA |
|---|---|---|---|
| LOG CHAN KLY OUT TEST SIGNAL DEGRADED | See para. 5-4.9. | ED | RSP |
| LOG CHAN NOISE LEVEL DEGRADED | See para. 5-4.9. | ED | RSP |
| LOG CHAN RF DRIVE TEST SIGNAL DEGRADED | See para. 5-4.9. | ED | RSP |
| LOG CHAN TEST SIGNALS DEGRADED | See para. 5-4.9. | ED | RSP |
| MAINT CONSOLE +15V POWER SUPPLY FAIL | Self-explanatory | ED | CTR |
| MAINT CONSOLE +28V POWER SUPPLY FAIL | Self-explanatory | ED | CTR |
| MAINT CONSOLE +5V POWER SUPPLY FAIL | Self-explanatory | ED | CTR |
| MAINT CONSOLE -15V POWER SUPPLY FAIL | Self-explanatory | ED | CTR |
| MMI INITIALIZATION ERROR | Self-explanatory | ED | CTR |
| MOD ADAP DATA FILE READ FAILED | Self-explanatory | ED | CTR |
| MODULATOR INVERSE CURRENT FAILURE | Self-explanatory | ED | XMT |
| MODULATOR OVERLOAD | Self-explanatory | ED | XMT |
| MODULATOR SWITCH FAILURE | Self-explanatory | ED | XMT |
| NOTCH WIDTH MAP GENERATION ERROR | Self-explanatory | ED | CTR |
| PEDESTAL +150V UNDERVOLTAGE* | Self-explanatory | ED | PED |

- - - - -

* Appears on non-redundant systems and control channel of redundant systems.

** Reassigned to USR Functional Area in RDA Alarms window on MSCF HCI for UD70/170 RPG.

Table 6-4. RDA Alarms - Maintenance Mandatory (continued)

| ALARM | DESCRIPTION | TYPE OF ALARM | FUNCTIONAL AREA |
|---|---|---|---|
| PEDESTAL +150V OVERVOLTAGE* | Self-explanatory | ED | PED |
| PEDESTAL +15V POWER SUPPLY 1 FAILURE* | Self-explanatory | ED | PED |
| PEDESTAL +28V POWER SUPPLY 2 FAILURE* | Self-explanatory | ED | PED |
| PEDESTAL +5V POWER SUPPLY 1 FAIL* | Self-explanatory | ED | PED |
| PEDESTAL -15V POWER SUPPLY 1 FAILURE* | Self-explanatory | ED | PED |
| POWER TRANSFER NOT ON AUTO | Switch remaining in this state will prevent automatic transfer to generator power. | ED | UTL |
| PRF LIMIT | SW may send wrong PRF for pulse width. | ED | XMT |
| Q CHANNEL BIAS OUT OF LIMIT | See para. 5-4.9 . | ED | RSP |
| RCVR ±18V POWER SUPPLY 1 FAIL | Self-explanatory | ED | RSP |
| RCVR +5V POWER SUPPLY 5 FAIL | Self-explanatory | ED | RSP |
| RCVR +9V POWER SUPPLY 6 FAIL | Self-explanatory | ED | RSP |
| RCVR -9V POWER SUPPLY 4 FAIL | Self-explanatory | ED | RSP |
| RCVR PROT +5V POWER SUPPLY 9 FAIL | Self-explanatory | ED | RSP |
| RDASOT CAL DATA FILE READ FAILED | See section 5-14 . | ED | CTR |

- - - - -

* Appears on non-redundant systems and control channel of redundant systems.

** Reassigned to USR Functional Area in RDA Alarms window on MSCF HCI for UD70/170 RPG.

Table 6-4. RDA Alarms - Maintenance Mandatory (continued)

| ALARM | DESCRIPTION | TYPE OF ALARM | FUNCTIONAL AREA |
|---|---|---|---|
| RF GEN FREQ SELECT OSCILLATOR FAIL | Self-explanatory. Alarm generated by frequency generator. | ED | RSP |
| RF GEN PHASE SHIFTED COHO FAIL | COHO output amplitude over 2 dB low. Alarm generated by frequency generator. | ED | RSP |
| RF GEN RF/STALO FAIL | RF Gen senses 2 dB signal drop. | ED | RSP |
| RPG LINK INITIALIZATION ERROR | Refer to Wideband Communications Manual, EHB 6-545. | ED | WB |
| RPG LINK - FUSE ALARM | Refer to NWS EHB 6-545. | ED | WB |
| RPG LINK - GENERAL ERROR | Refer to NWS EHB 6-545. | ED | WB |
| RPG LINK - MAJOR RCVR ALARM | Refer to NWS EHB 6-545. | ED | WB |
| RPG LINK - MAJOR XMTR ALARM | Refer to NWS EHB 6-545. | ED | WB |
| RPG LINK - MINOR ALARM | Refer to Wideband Communications Manual, EHB 6-545, section 5-2. | ED | WB |
| RPG LINK - REMOTE ALARM | Refer to Wideband Communications Manual, EHB 6-545, section 5-2. | ED | WB |
| RPG LINK - SVC 15 ERROR | Refer to Wideband Communications Manual, EHB 6-545, section 5-2. | ED | WB |
| RPG LINK - MAJOR ALARM | Refer to Wideband Communications Manual, EHB 6-545, section 5-2. | ED | WB |
| SIGNAL PROC +5V POWER SUPPLY FAIL | Self-explanatory | ED | RSP |

- - - - -

* Appears on non-redundant systems and control channel of redundant systems.

** Reassigned to USR Functional Area in RDA Alarms window on MSCF HCI for UD70/170 RPG.

Table 6-4. RDA Alarms - Maintenance Mandatory (continued)

| ALARM | DESCRIPTION | TYPE OF ALARM | FUNCTIONAL AREA |
|---|---|---|---|
| SPECTRUM FILTER LOW PRESSURE | Self-explanatory | ED | XMT |
| STATE FILE WRITE FAILED | Two state files are maintained on disk to attempt to avoid loss of data. This alarm indicates both files are corrupted. | ED | CTR |
| SYSTEM NOISE TEMP DEGRADED | Part of auto-calibration processing. See section 5-4.9. | ED | RSP |
| SYSTEM STATUS MONITOR INIT ERROR | Self-explanatory | ED | CTR |
| TPS “OUTPUT CONTACTOR CLOSED” | Indicates TPS has gone to “Auto Bypass” mode | ED | UTL |
| TRANSMITTER CABINET AIR FLOW FAIL | Self-explanatory | ED | XMT |
| TRANSMITTER CABINET INTERLOCK OPEN | Self-explanatory | ED | XMT |
| TRANSMITTER CABINET OVERTEMP | Self-explanatory | ED | XMT |
| TRANSMITTER LEAVING AIR TEMP EXTREME | Self-explanatory | ED | UTL |
| TRANSMITTER MAIN POWER OVERVOLTAGE | Self-explanatory | ED | XMT |
| TRANSMITTER OIL LEVEL LOW | Self-explanatory | ED | XMT |
| TRANSMITTER OIL OVER TEMP | Self-explanatory | ED | XMT |
| TRANSMITTER OVER CURRENT | Self-explanatory | ED | XMT |
| TRANSMITTER OVER VOLTAGE | Self-explanatory | ED | XMT |

- - - - -

* Appears on non-redundant systems and control channel of redundant systems.

** Reassigned to USR Functional Area in RDA Alarms window on MSCF HCI for UD70/170 RPG.

Table 6-4. RDA Alarms - Maintenance Mandatory (continued)

| ALARM | DESCRIPTION | TYPE OF ALARM | FUNCTIONAL AREA |
|---|---|---|---|
| TRANSMITTER PEAK POWER LOW | See para. 5-3.9.1 . | ED | XMT |
| TRANSMITTER PEAK POWER HIGH | Self-explanatory | ED | XMT |
| TRANSMITTER POWER BITE FAIL | See para. 5-3.9.1 . | ED | CTR |
| TRANSMITTER RECYCLING | When a serious transmitter fault is detected, the high voltage is removed and an attempt to clear the fault is made. The high voltage is then turned back on. This procedure is known as Transmitter Recycle. In the event of a hard failure, the transmitter will recycle five times. If the fault cannot be cleared, the high voltage is left off and the TRANSMITTER INOPERATIVE Alarm is set. | ED | XMT |
| TRIGGER AMPLIFIER FAILURE | Self-explanatory | ED | XMT |
| USER LINK-FUSE ALARM | Refer to Wideband Communications Manual, EHB 6-545, section 5-2. | ED | WB |
| USER LINK-GENERAL ERROR | Refer to Wideband Communications Manual, EHB 6-545, section 5-2. | ED | WB |
| USER LINK INITIALIZATION ERROR | Refer to Wideband Communications Manual, EHB 6-545, section 5-2. | ED | WB |
| USER LINK-MAJOR ALARM | Refer to Wideband Communications Manual, EHB 6-545, section 5-2. | ED | WB |

- - - - -

* Appears on non-redundant systems and control channel of redundant systems.

** Reassigned to USR Functional Area in RDA Alarms window on MSCF HCI for UD70/170 RPG.

Table 6-4. RDA Alarms - Maintenance Mandatory (continued)

| ALARM | DESCRIPTION | TYPE OF ALARM | FUNCTIONAL AREA |
|---|---|---|---|
| USER LINK-MAJOR RCVR ALARM | Refer to Wideband Communications Manual, EHB 6-545, section 5-2. | ED | WB |
| USER LINK-MAJOR XMTR ALARM | Refer to Wideband Communications Manual, EHB 6-545, section 5-2. | ED | WB |
| USER LINK-MINOR ALARM | Refer to Wideband Communications Manual, EHB 6-545, section 5-2. | ED | WB |
| USER LINK-REMOTE ALARM | Refer to Wideband Communications Manual, EHB 6-545, section 5-2. | ED | WB |
| USER LINK-SVC 15 ERROR | Refer to Wideband Communications Manual, EHB 6-545, section 5-2. | ED | WB |
| USER LU ASSIGNMENT ERROR | Self-explanatory | ED | USR** |
| VACUUM PUMP POWER SUPPLY VOLTAGE FAIL | Self-explanatory | ED | XMT |
| VELOCITY/WIDTH CHECK DEGRADED | See para. 5-4.9 . | ED | RSP |
| WAVEGUIDE ARC/VSWR | See para. 5-4.9 . | ED | XMT |
| WAVEGUIDE HUMIDITY/ PRESSURE FAULT | Self-explanatory | ED | XMT |
| XMTR POWER METER ZERO OUT OF LIMIT | Self-explanatory | ED | XMT |
| XMTR/ANT POWER RATIO DEGRADED* | See para. 5-3.9.2.1 . | ED | XMT |
| XMTR/DAU INTERFACE FAILURE | See para. 5-3.9.1 . | ED | XMT |

- - - - -

* Appears on non-redundant systems and control channel of redundant systems.

** Reassigned to USR Functional Area in RDA Alarms window on MSCF HCI for UD70/170 RPG.

Table 6-4. RDA Alarms - Maintenance Mandatory (continued)

| ALARM | DESCRIPTION | TYPE OF ALARM | FUNCTIONAL AREA |
|---|---|---|---|
| XMTR +15 VDC POWER SUPPLY 4 FAIL | Self-explanatory | ED | XMT |
| XMTR -15 VDC POWER SUPPLY 5 FAIL | Self-explanatory | ED | XMT |
| XMTR +28 VDC POWER SUPPLY 3 FAIL | Self-explanatory | ED | XMT |
| XMTR +45 VDC POWER SUPPLY 7 FAILURE | Self-explanatory | ED | XMT |
| XMTR +5 VDC POWER SUPPLY 6 FAIL | Self-explanatory | ED | XMT |

- - - - -

* Appears on non-redundant systems and control channel of redundant systems.

** Reassigned to USR Functional Area in RDA Alarms window on MSCF HCI for UD70/170 RPG.

Table 6-5. RDA Alarms - Maintenance Required

| ALARM | DESCRIPTION | TYPE OF ALARM | FUNCTIONAL AREA |
|---|---|---|---|
| AC UNIT #1 FILTER DIRTY | Self-explanatory | ED | UTL |
| AC UNIT #2 FILTER DIRTY | Self-explanatory | ED | UTL |
| CENSOR ZONE FILE READ FAILED | Self-explanatory | ED | CTR |
| EQUIP SHELTER HALON/DETECT SYS FAULT | Self-explanatory | ED | UTL |
| FIRE/SMOKE IN GENERATOR SHELTER | Self-explanatory | ED | UTL |
| FIRE/SMOKE IN EQUIP SHELTER | Self-explanatory | ED | UTL |
| GENERATOR FUEL STORAGE TANK LEVEL LOW | Self-explanatory | ED | UTL |
| GENERATOR MAINTENANCE REQUIRED | Self-explanatory | ED | UTL |

Table 6-5. RDA Alarms - Maintenance Required (continued)

| ALARM | DESCRIPTION | TYPE OF ALARM | FUNCTIONAL AREA |
|---|---|---|---|
| GEN SHELTER HALON/ DETECT SYS FAULT | Self-explanatory | ED | UTL |
| I/Q AMP BALANCE-MAINT REQUIRED | See para. 5-4.9. | ED | RSP |
| I/Q PHASE BALANCE-MAINT REQUIRED | See para. 5-4.9. | ED | RSP |
| IF ATTEN STEP SIZE-MAINT REQUIRED | See para. 5-4.9. | ED | RSP |
| LIN CHAN CLTR REJECT-MAINT REQUIRED | See para. 5-4.9. | ED | RSP |
| LIN CHAN GAIN CAL CHECK-MAINT REQD | See para. 5-4.9. | ED | RSP |
| LOG CHAN CAL CHK-MAINT REQUIRED | See para. 5-4.9. | ED | RSP |
| LOG CHAN CLTR REJECT-MAINT REQUIRED | See para. 5-4.9. | ED | RSP |
| RADOME AIR TEMP EXTREME | Self-explanatory | ED | UTL |
| SECURITY SYSTEM EQUIPMENT FAILURE | Self-explanatory | ED | UTL |
| SECURITY SYSTEM DISABLED | Self-explanatory | ED | UTL |
| SYSTEM NOISE TEMP-MAINT REQUIRED | See para. 5-4.9. | ED | RSP |
| TRANSMITTER FILTER DIRTY | Self-explanatory | ED | UTL |
| UNAUTHORIZED SITE ENTRY | Self-explanatory | ED | UTL |
| VELOCITY/WIDTH CHECK-MAINT REQUIRED | See para. 5-4.9. | ED | RSP |
| XMTR MODULATOR SWITCH REQUIRES MAINT | Self-explanatory | ED | XMT |

Table 6-5. RDA Alarms - Maintenance Required (continued)

| ALARM | DESCRIPTION | TYPE OF ALARM | FUNCTIONAL AREA |
|---|---|---|---|
| XMTR POST CHARGE REG REQUIRES MAINT | Self-explanatory | ED | XMT |

Table 6-6. RDA Alarms - Secondary Alarms

| ALARM | DESCRIPTION | TYPE OF ALARM | FUNCTIONAL AREA |
|---|---|---|---|
| ARCH II ALLOCATION/ MEDIA FULL ERROR | Self-explanatory | OC | ARCH |
| ARCH II CAPACITY LOW | 8MM tape remaining is low | OC | ARCH |
| ARCH II NEW 8MM TAPE INSTALLED | Self-explanatory | OC | ARCH |
| ARCH II UNABLE TO LOAD TAPE - MNT REQUIRED | Self-explanatory | OC | ARCH |
| ARCH II WRITE PROTECTED TAPE ERROR | Self-explanatory | OC | ARCH |
| ARCH II TAPE HEAD CLEANING REQUIRED | Self-explanatory | OC | ARCH |
| ARCHIVE II FILE MANAGEMENT ERROR | Self-explanatory | OC | ARCH |
| ARCHIVE II I/O ERROR | Self-explanatory | OC | ARCH |
| ARCHIVE II LOAD ERROR | Self-explanatory | OC | ARCH |
| ARCH II PLAYBACK VOLUME SCAN NOT FOUND | Self-explanatory | OC | ARCH |
| ARCH II TASK PAUSED - RESTART INITIATED | See section 5-14. | OC | ARCH |
| AU0 PARITY ERROR | Failure of parity; check first arithmetic unit in PSP. See para. 5-5.5. | FO | N/A |

- - - - -

* Appears on non-redundant systems and control channel of redundant systems.

Table 6-6. RDA Alarms - Secondary Alarms (continued)

| ALARM | DESCRIPTION | TYPE OF ALARM | FUNCTIONAL AREA |
|---|---|---|---|
| AU1 PARITY ERROR | Failure of parity; check second arithmetic unit in PSP. See para. 5-5.5. | FO | N/A |
| AU2 PARITY ERROR | Failure of parity; check third arithmetic unit in PSP. See para. 5-5.5. | FO | N/A |
| BYPASS MAP FILE WRITE FAILED | See section 5-14. | OC | N/A |
| CENSOR ZONE FILE WRITE FAILED | See section 5-14. | OC | CTR |
| CHAN ALREADY CONTROLLING - CMD REJ | Self-explanatory | OC | N/A |
| CHAN ALREADY NON-CONTROLLING - CMD REJ | Self-explanatory | OC | N/A |
| CLUTTER FILTER PARITY ERROR | See section 5-5. | FO | N/A |
| CONTROL SEQ TIMEOUT - RESTART INITIATED | See section 5-14. | OC | N/A |
| DAU I/O STATUS ERROR | See sections 5-9 and 5-14. | FO | CTR |
| DAU STATUS READ TIMED OUT | See section 5-14. | FO | CTR |
| DAU TASK PAUSED - RESTART INITIATED | See section 5-14. | OC | N/A |
| EXCESSIVE RADIALS IN A CUT | See section 5-14. | OC | N/A |
| INIT SEQ TIMEOUT - RESTART INITIATED | See section 5-14. | OC | N/A |

- - - - -

* Appears on non-redundant systems and control channel of redundant systems.

Table 6-6. RDA Alarms - Secondary Alarms (continued)

| ALARM | DESCRIPTION | TYPE OF ALARM | FUNCTIONAL AREA |
|---|---|---|---|
| INTERPROCESSOR STBY COMMAND REJECTED | If a non-controlling channel commands a controlling channel, which is in local control with remote control not enabled, to go to standby and become the non-controlling channel, this alarm is issued. | OC | N/A |
| INVALID REMOTE VCP RECEIVED | See section 5-14. | OC | N/A |
| INVALID RPG COMMAND RECEIVED | See section 5-14. | OC | N/A |
| INVALID CENSOR ZONE MESSAGE RECEIVED | See section 5-14. | OC | N/A |
| MMI I/O STATUS ERROR | See sections 5-9 and 5-14. | FO | CTR |
| MMI TASK PAUSED - RESTART INITIATED | See section 5-14. | OC | N/A |
| MULT DAU CMD TOUTS - RESTART INITIATED | Three I/O errors within 5 minutes; see sections 5-9 and 5-14. | OC | N/A |
| MULT DAU I/O ERROR - RDA FORCED TO STBY | Three I/O errors within 5 minutes; see paragraph 5-9.8 and section 5-14. | OC | N/A |
| MULT PED I/O ERROR - RDA FORCED TO STBY* | Three I/O errors within 5 minutes; see paragraph 5-1 1.9.7 and section 5-14. | OC | N/A |
| MULT SPS I/O ERROR - RDA FORCED TO STBY | Three I/O errors within 5 minutes; see paragraph 5-5.5 and section 5-14. | OC | N/A |

- - - - -

* Appears on non-redundant systems and control channel of redundant systems.

Table 6-6. RDA Alarms - Secondary Alarms (continued)

| ALARM | DESCRIPTION | TYPE OF ALARM | FUNCTIONAL AREA |
|---|---|---|---|
| NO INTERPROCESSOR COMMAND RESPONSE | If a non-controlling channel commands a controlling channel to go to standby and become the non-controlling channel and the other channel does not acknowledge the command this alarm is issued. | OC | N/A |
| PEDESTAL I/O STATUS ERROR* | See paragraph 5-1 1.9.5 and section 5-14. | FO | PED |
| PEDESTAL SELF-TEST 1 ERROR* | Comm check between pedestal electronics and RDASC failed. | FO | N/A |
| PEDESTAL SELF-TEST 2 ERROR* | One of the LRU checks within pedestal electronics failed on initialization. | FO | N/A |
| PED TASK PAUSED - RESTART INITIATED* | See section 5-5. | OC | N/A |
| PRT1 INTERVAL ERROR | See section 5-5. | FO | N/A |
| PRT2 INTERVAL ERROR | See section 5-5. | FO | N/A |
| RADIAL DATA LOST | See section 5-14. | OC | N/A |
| RADIAL TIME INTERVAL ERROR | Application program compares PSP radial integral interrupts against RDASC clock. Alarm is displayed if the interval is not within 3 msec of predicted duration. | FO | N/A |
| RDASC CAL DATA FILE WRITE FAILED | See section 5-14. | FO | N/A |
| RECOMMEND SWITCH TO UTILITY POWER | Self-explanatory | OC | N/A |
| REDUN CHAN INTERFACE I/O STATUS ERROR | RDASC Processor to RDASC Processor RS232 LINK Input/Output errors. | FO | N/A |

- - - - -

* Appears on non-redundant systems and control channel of redundant systems.

Table 6-6. RDA Alarms - Secondary Alarms (continued)

| ALARM | DESCRIPTION | TYPE OF ALARM | FUNCTIONAL AREA |
|---|---|---|---|
| REDUN CHAN TSK PAUSED -RESTR T INITIATED | See section 5-14. | OC | N/A |
| REMOTE VCP FILE WRITE FAILED | See section 5-14. | OC | N/A |
| REMOTE VCP NOT DOWNLOADED | See section 5-14. | OC | N/A |
| RPG LOOP TEST VERIFICATION ERROR | Refer to NWS EHB 6-545, section 5-2. | OC | N/A |
| RPG LOOP TEST TIMED OUT | Refer to NWS EHB 6-545, section 5-2. | OC | N/A |
| SEND DAU COMMAND TIMED OUT | Self explanatory | FO | CTR |
| SEND WIDEBAND STATUS TIMED OUT | Self-explanatory | FO | WB |
| SPS CLOCK/MICRO_P SET ERROR | See para. 5-5.5. | FO | N/A |
| SPS DIM LOOP TEST ERROR | See para. 5-5.5. | FO | RSP |
| SPS HARDWARE INIT SELECT ERROR | See para. 5-5.5. | FO | RSP |
| SPS HSP LOOP TEST ERROR | See para. 5-5.5. | FO | RSP |
| SPS I/O STATUS ERROR | See para. 5-5.5. | FO | RSP |
| SPS MICROCODE/ECW LOAD ERROR | See para. 5-5.5. | FO | RSP |
| SPS RTD LOOP TEST ERROR | See para. 5-5.5. | FO | RSP |
| SPS READ TIMING ERROR | See para. 5-5.5. | FO | N/A |
| SPS SMI LOOP TEST ERROR | See para. 5-5.5. | FO | RSP |
| SPS TASK PAUSED - RESTART INITIATED | See para. 5-5.5. | OC | N/A |
| SPS WRITE TIMING ERROR | See para. 5-5.5. | FO | N/A |

- - - - -

* Appears on non-redundant systems and control channel of redundant systems.

Table 6-6. RDA Alarms - Secondary Alarms (continued)

| ALARM | DESCRIPTION | TYPE OF ALARM | FUNCTIONAL AREA |
|---|---|---|---|
| SPS MICRO/ECW DATA FILE READ FAIL | See para. 5-5.5 . | FO | N/A |
| SPS MEMORY CLEAR ERROR | Self-explanatory | FO | N/A |
| SPS MICRO/ECW VERIFY ERROR | See para. 5-5.5 . | FO | N/A |
| SPS COEFFICIENT RAM LOAD ERROR | See para. 5-5.5 . | FO | N/A |
| SPS AU RAM LOAD ERROR | See para. 5-5.5 . | FO | N/A |
| STANDBY FORCED BY INOP ALARM | See section 5-14 . | OC | N/A |
| UNABLE TO CMD OPER - REDUN CHAN ONLINE | Prior to entering OPERATE, the RDASC Processor sends a status request command to the other channel (via the Interprocessor Link) to determine whether it is in OPERATE. If other channel is in OPERATE, the RDA returns the state present at the time the command to OPERATE was received and issues the alarm. Lack of response within two seconds is interpreted as not being in the OPERATE state. If this interrogation determines that the other channel is not in OPERATE, the RDA continues the transition to OPERATE sequence. | OC | N/A |
| USER LOOP TEST VERIFICATION ERROR | Refer to NWS EHB 6-545, section 5-2. | FO | WB |
| USER LOOP TEST TIMED OUT | Refer to NWS EHB 6-545, section 5-2. | FO | WB |

- - - - -

* Appears on non-redundant systems and control channel of redundant systems.

Table 6-6. RDA Alarms - Secondary Alarms (continued)

| ALARM | DESCRIPTION | TYPE OF ALARM | FUNCTIONAL AREA |
|---|---|---|---|
| WIDBND TASK PAUSED - RESTART INITIATED | Refer to NWS EHB 6-545, section 5-2. | OC | WB |
| WDOG TIMER TSK PAUSED - RSTRT INITIATED | See section 5-14. | OC | N/A |

- - - - -

* Appears on non-redundant systems and control channel of redundant systems.

The Notes for Figure 6-1 on pages 6-39 through 6-49 have been deleted.

Notes for Figure 6-1 (System Fault Isolation Flowchart)

**NOTE**

Command entries and mouse selections are shown in this section in **bold** type. Variable names are normally shown with a unique font (e.g. *variable_name)*. Within a specified command string that must be entered, the variable placeholders are not bold type; however, all portions of the command that are entered exactly as shown are in bold type. The variable placeholder within the command string must be replaced with a name, address, etc. unique to each system and the user is told how to formulate the entry, or directed to where to find this information. Since the keyboard in use may have either an "Enter" key or a "Return" key, the end of the command line is delineated with a **<CR>.** Unless stated otherwise, each command line shown must be "entered" to be processed. Also, directory names/paths shown outside of a command example are *italicized* for clarity purposes.

This section will discuss some graphical manipulations using a mouse. The word "click" indicates a standard left mouse click. When a right click or double-click is required, it is specifically indicated. The symbol ▶ is used to indicate subsequent left clicks through sub-menu selections.

**NOTE**

Procedures requiring Sun operating system level Superuser (root) privileges are marked as follows at the right margin:

(1) DEFINITION

Normal operations is defined as the state of the WSR-88D system when full chain operation has been established (i.e., wideband communications between RPG and RDA established, RDA under RPG control) and one volume scan has been completed, thus making products available at dedicated PUPs.

(2) ARCHIVE IV CHECK

| Step | Operator Action | System Response/Comments |
|---|---|---|

**NOTE**

Ensure disk is NOT write protected.

| | | |
|---|---|---|
| 1. | At the optical disk drive: | |
| | a. Insert test optical disk into the SCSI Optical Disk Unit. | |
| | b. Turn handle 90 degrees. | Locks in disk. |
| | c. Press disk load button on lower right side of drive. | Green indicator starts blinking. Wait until indicator lights steadily. |

Notes for Figure 6-1 (System Fault Isolation Flowchart)

| Step | Operator Action | System Response/Comments |
|---|---|---|
| (2) | ARCHIVE IV CHECK | |
| | **NOTE**<br>All of the entries are made at the PUP applications terminal. | |
| 2. | Press **<F1>** key and then enter **S,P,19 <CR>** | Displays status of base reflectivity. |
| 3. | Make a note of the product parameters for line 1:<br>• Slice<br>• RPG<br>• Time<br>• Date | |
| 4. | Enter **S,P,D,1,L <CR>** | Displays product on left color monitor. |
| 5. | a. Press **<F1>** key and then enter **A,A,O,R <CR>** | Archives the product. |
| | b. Fill in the parameters Data Level=**16**, Resolution=**.54**, and the parameters from step 3 then press**<CR>**. | `Archive Unit 1 Write Done` is displayed after archive is completed. |
| 6. | a. Press **<F1>** key and then enter **S,P,19 <CR>** | Displays status of base reflectivity. |
| | b. Press **<F1>** key and then enter **S,P,DEL**,*X* **<CR>** (*X = Line #* of *product from step 3*.) | Deletes product from database. |
| | c. Press **<F1>** key and then enter **A,R,O,R <CR>** | Reads product from optical disk. |
| | d. Fill in the parameters from step 5.b and then press **<CR>**. | `Archive Unit 1 Read Done` is displayed after archive read is completed. |
| 7. | a. Press **<F1>** key and then enter **S,P,19 <CR>** | Displays status of base reflectivity. |
| | b. Enter **S,P,D,*X*,R <CR>** (*X = Line # of product read*.) | Displays product on right color monitor. |

Notes for Figure 6-1 (System Fault Isolation Flowchart) (continued)

| Step | Operator Action | System Response/Comments |
|---|---|---|
| (3) | EXERCISE THE STREAMING TAPE (PUP) | |
| 1. | At the PUP M3200 Processor, insert a blank tape into the SCSI drive. Ensure that it is ready to write on and that the black pointer at the top of the tape is not pointing to the safe position. | |
| 2. | At the PUP System Console, enter: | |
| | a. **PUPDOWN <CR>** | |
| | b. **D TA <CR>** | `TASK(S) NOT FOUND` displayed if all tasks are canceled. If there are tasks in memory, note the task ID and perform step c. If all tasks are canceled proceed to step d. |
| | c. **CA** *Taskid* **<CR>** | Cancels task. |
| | d. **LO BACKUP,5ØØ <CR>** | |
| | e. **ST <CR>** | |
| | f. **IN=DSCØ:,OUT=STØ:,SEL=CON:,SIZ=3ØØ, LI=CON:,DEL,VER,END <CR>** | |
| 3. | At the `BACKUP>` prompt, enter:<br>**PUPDOWN.CSS <CR>**<br>**./ <CR>** | The screen should give a series of messages ending with `End of Task = 0`. |
| 4. | If `End of Task = 0` appears, the tape works. At the PUP M3200 Processor, remove the tape from SCSI drive. | A value other than 0 indicates an abnormal termination of task has occurred. |
| 5. | At the PUP System Console, enter:<br>**PUPUP <CR>** | |

Notes for Figure 6-1 (System Fault Isolation Flowchart) (continued)

| Step | Operator Action | System Response/Comments |
|---|---|---|
| (4) | EXERCISE THE ONE TIME DIAL UP | |
| 1. | At the PUP graphics tablet: | |
| | a. Use the mouse to select:<br>Base Reflectivity<br>Default Parameters<br>Lowest Elevation<br>Dial-up Assoc RPG<br>Send RPG Request<br>Clear Screen/Quad. | |
| | b. Wait about one minute while the program runs. | At PUP monitor, the following messages are displayed:<br>`SEND RPG REQUEST`<br>`REQUEST ACCEPTED`.<br>A line number appears followed by a request for DSCNCT shortly after a timeout error occurs. Verify that the requested product was received. |
| (5) | ISSUE A WIDEBAND DISCONNECT/CONNECT | |
| 1. | At the MSCF RPG HCI, click on the wideband link lines between the RDA and RPG. | Opens up the `RDA/RPG Interface Control/Status` window. If the link shows a `State:` of `Disconnected HCI` or `Disconnect Pending`, proceed to step 3. |

Notes for Figure 6-1 (System Fault Isolation Flowchart) (continued)

| Step | Operator Action | System Response/Comments |
|---|---|---|
| (5) | ISSUE A WIDEBAND DISCONNECT/CONNECT | |
| 2. | In the RDA/RPG Interface Control/Status window, click **Disconnect** and then click **Yes** when prompted to continue. | Issues disconnect to wideband link. State: should change to Disconnected HCI or Disconnect Pending. If previous State: was Failure, the state may change to Disconnect Pending and then eventually revert back to a Failure state. If this appears to be the case, wait approximately one minute after the original disconnect command is entered before proceeding. |
| 3. | In the RDA/RPG Interface Control/Status window, click **Connect** and then click **Yes** when prompted to continue. | Issues connect to wideband link. State: should change to Connected. If State: remains Connect Pending or Failed, wideband did not connect and this procedure is complete. Close the Wideband Status/Control window. |

**NOTE**

For steps 2 and 3, if no state change was noticed at all, then the HCI is not responding. For step 3, if some state change is noted, or the Feedback: message Connect Wideband Link is noted on the main HCI screen, then the HCI does appear to be functioning OK even if the wideband does not actually connect (i.e., a wideband problem).

| | | |
|---|---|---|
| 4. | If the wideband link connected, click the RDA **Control** block. | Opens RDA/RPG Interface Control/Status window. |
| 5. | Click RDA State: **Operate** and then click **Yes** when prompted to continue. | Issues Operate command. State: display should change to Operate. |

Notes for Figure 6-1 (System Fault Isolation Flowchart) (continued)

| Step | Operator Action | System Response/Comments |
|---|---|---|
| (6) | VERIFY RPG HCI FUNCTIONALITY AT MSCF WORKSTATION, SYSTEM CHECK | |

**NOTE**

If the system is in full operation, the following check will temporarily place the RDA in STANDBY and then back into OPERATE. If this check is just being done as part of an operability check only (Figure 6-1, sheet 2) and not to isolate a system fault, then obtain approval from operations personnel prior to performing this check (from Active channel only for FAA Redundant system). This can be performed at any time on the HCI from the FAA Redundant Inactive channel.

| | | |
|---|---|---|
| 1. | On the RPG HCI on the MSCF Workstation, click on the wideband link (three lines) between the RDA and RPG. For an FAA Redundant system, this check can be done on the HCI for either channel; however, for the purposes of a system check, it should be primarily done on the Active channel. | Opens up the `RDA/RPG Interface Control/Status` window. If the current wideband `State:` is `Disconnected HCI`, proceed to step 3. |
| 2. | In the `RDA/RPG Interface Control/Status` window, click **Disconnect** and then click **Yes** when prompted to continue. | Issues disconnect to wideband link. `State:` should change to `Disconnected HCI`. If the present `State:` is `Failure`, the `State:` should show a `Disconnect Pending`, but probably will not actually change to a disconnect state and then revert back to a `Failure` state (wait approximately one minute before proceeding). If state does not change, HCI is not responding. Proceed to step 4. |

Notes for Figure 6-1 (System Fault Isolation Flowchart) (continued)

| Step | Operator Action | System Response/Comments |
|---|---|---|
| (6) | VERIFY RPG HCI FUNCTIONALITY AT MSCF WORKSTATION, SYSTEM CHECK | |
| 3. | In the `RDA/RPG Interface Control/ Status` window, click **Connect** and then click **Yes** when prompted to continue. | Issues connect to wideband link. `State:` should change to its previous state (`Connected`, `Connect Pending` or `Failure`. If previous or present `State:` was `Failure`, no specific state change may be noted if an actual wideband problem exists; however, the `Feedback:` message `Connect Wideband Link` should be noted on the main HCI screen. Close the `RDA/RPG Interface Control/Status` window. If state does not change or feedback message is not noted, HCI is not responding. Proceed to step 4. If HCI appears to be responding OK, this procedure is complete. |
| 4. | Double-click the [-] in the upper left corner of the HCI window to kill the HCI. For FAA Redundant systems, kill the HCI for the channel being checked at this time. | The HCI closes. Since this HCI is displayed on this platform through the RSSD, this is all that is required to stop the HCI functionality. |
| 5. | If an MSCF display is not available, go to a terminal window and enter:<br>**mscf &<CR>** | If an MSCF Display is already open, continue with the next step. The MSCF window is used to start a new HCI. |
| 6. | On the MSCF window, click on **RPG HCI**.<br>For FAA Redundant systems, the appropriate channel must be selected first. | A new HCI appears. For DOD systems and either FAA channel, the display will not be complete for approximately one minute. If no HCI appears, the HCI is non-functional and this procedure is complete. If an HCI appears, continue on to the next step to evaluate if it useable. |

Notes for Figure 6-1 (System Fault Isolation Flowchart) (continued)

| Step | Operator Action | System Response/Comments |
|---|---|---|
| (6) | VERIFY RPG HCI FUNCTIONALITY AT MSCF WORKSTATION, SYSTEM CHECK | |
| 7. | On the RPG HCI, click on the WB link between the RDA and RPG. | Opens up the `RDA/RPG Interface Control/Status` window. If the current wideband `State:` is `Disconnected HCI`, proceed to step 9. |
| 8. | In the `RDA/RPG Interface Control/ Status` window, click **Disconnect** and then click **Yes** when prompted to continue. | Issues disconnect to wideband link. `State:` should change to `Disconnected HCI`. If the present `State:` is `Failure`, the `State:` should show a `Disconnect Pending`, but probably will not actually change to a disconnect state and then revert back to a `Failure` state (wait approximately one minute before proceeding). If state does not change, HCI is not responding. |
| 9. | In the `RDA/RPG Interface Control/Status` window, click **Connect** and then click **Yes** when prompted to continue. | Issues connect to wideband link. `State:` should change to its previous state (`Connected`, `Connect Pending` or `Failure`). If previous or present `State:` was `Failure`, no specific state change may be noted if an actual wideband problem exists; however, the `Feedback:` message `Connect Wideband Link` should be noted on the main HCI screen. Close the `RDA/RPG Interface Control/Status` window. If state does not change or feedback message is not noted, HCI is not responding. |

Notes for Figure 6-1 (System Fault Isolation Flowchart) (continued)

| Step | Operator Action | System Response/Comments |
|---|---|---|
| (7) | ARCHIVE III CHECK FROM MSCF WORKSTATION | |
| 1. | On the RPG HCI at the MSCF Workstation, verify if the Archive III indicator under the `Archive Products` block indicates `Active`. | If Archive III is *Active*, Archive III appears to be functional. Proceed to step 4 to validate that products are being archived. If it indicates *Idle*, proceed with the next step. If it indicates *Not Mounted*, then Archive III in not functioning and this procedure is complete. |
| 2. | At the RPG HCI, click the **Archive Products** block under the RPG container. | Opens the `Archive III Control/Status` window. |
| 3. | In the `Archive III Control/Status` window, click `Products` **Record** in the `Auto Archive Control/Status` area. Click **Yes** when prompted. | Turns on auto archive of products. The `Status` indicator should change to *Active*. |
| 4. | If the RDA is not already in Operate, click `RDA` **Control** and then click **Operate** under `RDA State`. Note time of Volume Start to the left of the radome or, if already in RDA Operate, note the time of the next volume start. | The volume start time is necessary to determine if the lowest elevation reflectivity product is being archived successfully. |
| 5. | Wait until the VCP has completed its 5 degree elevation cuts, then click `Read From Archive:` **Product** at the top of the `Archive III Control/Status` window. | Opens the `Read Product from Archive III` window. |
| 6. | In the `Product Retrieval Criteria` area, click the down arrow in the `Date:` block. Scroll down as necessary and select today's date. In both of the `Time:` blocks, click the down arrow, scroll down, and select the newest product time. In the `Product:` field, note if the default product (R[19], Reflectivity, .5 degrees) is indicated to be available to read for the volume time noted in step 4. | If the product is available for read, then the Archive III is functioning correctly. |

Notes for Figure 6-1 (System Fault Isolation Flowchart) (continued)

| Step | Operator Action | System Response/Comments |
|---|---|---|
| (8) | CHECK JAZ DISK FUNCTIONALITY | |
| | | ***SU*** |
| 1. | For the RPG processor only, stop the applications software per NWS EHB 6-525, Table 4-40. | This is necessary to be able to unmount and retrieve the Archive III Jaz disk prior to performing this check. |
| | **NOTE**<br>Completion of this procedure requires Superuser (root) privileges. | |
| 2. | At the MSCF workstation (for MSCF processor) or the RPG maintenance position workstation (for RPG processor), go to a normal terminal window system prompt and enter:<br>**su<CR>** and the *root_password*<**CR**> to become a root user. | |
| 3. | If at an RPG processor, then at the # prompt, enter:<br>**umount /jaz<CR>** then press the button on the Jaz drive and remove the Archive III Jaz disk from the drive (NWS only). | This unmounts the Archive III Jaz disk prior to performing the backup. If not at an RPG processor, continue with the next step. If a `umount: /jaz not mounted` message occurs, it just indicates that the Jaz disk cartridge is already unmounted. |
| 4. | Insert a Jaz disk cartridge designated for backup purposes into the Jaz disk drive. | Ensure this is a backup disk cartridge and not an Archive III cartridge. |

Notes for Figure 6-1 (System Fault Isolation Flowchart) (continued)

| Step | Operator Action | System Response/Comments |
|---|---|---|
| (8) | CHECK JAZ DISK FUNCTIONALITY | |
| 5. | If at an RPG workstation, then in the terminal window at the # prompt, enter:<br>**ls -l /jaz<CR>**<br><br>If at an MSCF workstation, then in the terminal window at the # prompt, enter:<br>**mount /dev/dsk/c1t3dØs2 /jaz<CR>** | Mounts the Jaz disk cartridge in the Jaz disk drive to the /jaz mount point and displays a current directory listing for the disk cartridge. For the RPG, this is done by an auto-mounting program as soon as any attempt is made to access the /jaz directory. If an error occurs (either `mount error` or `permission denied` error), the Jaz Disk drive is not functioning correctly and this procedure is complete. |
| 6. | In the terminal window at the # prompt, enter:<br>**mount<CR>** | Verify that the last line shows /jaz is mounted. If it is not mounted, the Jaz Disk drive is not functioning correctly and this procedure is complete. |
| 7. | In the terminal window at the # prompt, enter:<br>**cp /etc/hosts /jaz<CR>** | Makes a backup copy of the hosts file on the Jaz disk cartridge. A # prompt will return if the copy was successful and no write errors should be noted. If the system does not return to a # prompt or write errors are noted, the Jaz disk drive is defective. |
| 8. | In the terminal window at the # prompt, enter:<br>**ls -lrt /jaz<CR>** | Displays a directory listing of the /jaz directory with the most recent files listed at the bottom. The “hosts” file should be the last entry. |
| 9. | In the terminal window at the # prompt, enter:<br>**umount /jaz<CR>** | Unmounts the Jaz disk cartridge. This procedure is complete. |

Notes for Figure 6-1 (System Fault Isolation Flowchart) (continued)

| Step | Operator Action | System Response/Comments |
|---|---|---|
| (8) | CHECK JAZ DISK FUNCTIONALITY | |
| 10. | Press the button on the Jaz drive to eject the backup disk cartridge. | If this is an RPG, reinstall the original Archive III disk cartridge. |
| 11. | At the # prompt, enter:<br>**exit<CR>** | Exits Superuser mode. |
| 12. | If at an RPG processor, reinsert the Archive III disk (NWS only) and then restart applications software per NWS EHB 6-525 Table 4-41. | If at an RPG, applications software was stopped prior to performing this procedure. |
| (9) | CHECK FLOPPY DRIVE FUNCTIONALITY | |
| 1. | Insert a known good DOS or UNIX formatted floppy into the floppy drive. | Either type formatted floppy will work in the drive. |
| 2. | At a normal user prompt enter:<br>**volcheck<CR>** | "volcheck" mounts the floppy disk in the drive. |
| 3. | At the normal user prompt, enter<br>**mount<CR>** | Displays all mounted devices and disk partitions. The last mount entry should indicate `/floppy/unnamed_floppy` (or possible floppy volume name) is the mount point for `/vol/dev/diskette0/...` (the actual floppy. If a "floppy" entry is not observed, the floppy disk did not mount and the drive is defective. |
| 4. | At the normal user prompt, enter<br>**cp /etc/hosts /floppy/floppyØ<CR>** | "/floppy/floppyØ" is just a consistent linked mount point, whether the floppy is "unnamed" or actually has a volume name. |
| 5. | At the normal user prompt, enter:<br>**ls -lrt /floppy/floppyØ/*<CR>** | Displays a directory listing of the /floppy/floppyØ disk. The "*" is necessary in this case to get past the link. The "hosts" file should be the last entry in the main floppy disk directory list (sub-directory lists may be present also). |

Notes for Figure 6-1 (System Fault Isolation Flowchart) (continued)

| Step | Operator Action | System Response/Comments |
|---|---|---|
| (9) | CHECK FLOPPY DRIVE FUNCTIONALITY | |
| 6. | At the normal user prompt, enter: **eject<CR>**and click **OK** when prompted that the floppy disk can be manually ejected. | Unmounts the floppy disk. This procedure is complete. |
| (10) | CHECK CD-ROM DRIVE FUNCTIONALITY | |
| 1. | Insert the Full System Load CD into the CD-ROM drive and close the cradle. | Any known good CD should work (e.g., the Technical Manual Distribution CD). The CD should auto-mount and a File Manager window should appear. |
| 2. | Click on any file within the File Manager window to select it (not a folder). | This file will be used to test a copy of the file from the CD. |
| 3. | At the top of the File Manager window, click **Selected ▶ Copy to ...**. | Will allow for the selected file to be copied off of the CD. |
| 4. | Use the mouse to highlight the entire path in the `Destination Folder:` box. Then enter: **~<CR>** | The home directory (~) is selected as the destination point. As soon as <CR> is entered, the file is copied. |
| 5. | Go to a normal terminal window with a normal user prompt (not a root # prompt) and enter: **cd /export/home/***user_login_name***<CR>** | Changes to user's home directory. |
| 6. | At user's home directory prompt, enter: **ls -lrt<CR>** | Displays a file listing with the latest file at the end of the listing. The copied file should be at the bottom of the list. Use the rm command to remove that specific file if desired. |
| 7. | On the File Manager window, click **File ▶ Eject** and retrieve the test CD from the CD-ROM drive. | This ejects the CD and closes the File Manager window. |

Notes for Figure 6-1 (System Fault Isolation Flowchart) (continued)

| Step | Operator Action | System Response/Comments |
|---|---|---|
| (11) | CHECK DATE/TIME OF MSCF, RPG, OR BDDS AT MSCF WORKSTATION | |
| 1. | At any MSCF Workstation terminal window prompt, enter:<br>**date<CR>** | This displays the system date and time (GMT time, 24 hour clock). To remotely check the date/time of the RPG and/or BDDS processors from the MSCF, continue with step 2. Otherwise, this procedure is complete. |
| 2. | To remotely check the date/time of the RPG, at an MSCF terminal window prompt, enter:<br>**telnet rpg1<CR>**<br>(or rpg2 for FAA Redundant only) | "telnet" will establish a remote connection to that processor. To only check the BDDS processor time, skip to step 4. Otherwise, continue with the next step. |
| 3. | At the `Login:` prompt, enter normal user account name and enter password when prompted. | All maintenance personnel should have user accounts on all processors. |
| 4. | Enter:<br>**date<CR>** | This displays the system date and time (GMT time, 24 hour clock). To remotely check the date/time of the BDDS processor from the RPG, then continue with step 5. Otherwise, this procedure is complete. (Note: Not all sites will have BDDS units.) |
| 5. | To remotely check the date/time of the BDDS, at an MSCF terminal window prompt or an RPG terminal window prompt, enter:<br>**telnet bdds<CR>** | "telnet" will establish a remote connection to that processor. |
| 6. | At the `Login:` prompt, enter a normal user account name and enter password when prompted. | All maintenance personnel should have user accounts on all processors. |
| 7. | Enter:<br>**date<CR>** | This displays the system date and time (GMT time, 24 hour clock). This procedure is complete. |

Notes for Figure 6-1 (System Fault Isolation Flowchart) (continued)

| Step | Operator Action | System Response/Comments |
|---|---|---|
| (11) | CHECK DATE/TIME OF MSCF, RPG, OR BDDS AT MSCF WORKSTATION | |
| 8. | Enter:<br>**exit<CR>**as many times as necessary to exit telnet session(s) and return to an MSCF prompt | This displays the system date and time (GMT time, 24 hour clock). This procedure is complete. |
| (12) | EXERCISE THE STREAMING TAPE (RDA) | |
| 1. | At the RDA M3200 Processor, insert a blank tape into the SCSI drive. Ensure that it is ready to write on and that the black pointer at the top of the tape is not pointing to the safe position. | |
| 2. | At the RDA System Console, enter:<br>**LO BACKUP,5ØØ <CR>**<br>**ST,IN=DSCØ:,OUT=STØ:,LI=CON:,**<br>**SIZ=3ØØ,SEL=CON:,DEL,VER,END <CR>** | |
| 3. | At the `BACKUP>` prompt, enter:<br>**RDAUP.CSS <CR>**<br>**./ <CR>** | The screen should give a series of messages ending with<br>`End of Task = 0` |
| 4. | If `End of Task = 0` appears, the tape works. At the RDA M3200 Processor, remove the tape from SCSI drive. | If an `End of Task = 0` messages is not received, the tape "exercise" did not complete successfully. |
| (13) | OS/32 ERROR MESSAGES | |

The following is a list of operating system alarms which may appear on the system console. For explanations of individual alarms, refer to Tables 4-8.1 and 4-8.2 of EHB 6-530.

Operating System Alarms

1. I/O error on voln; Mark off and check bit map error on voln; mark off and check
2. PIC (Precision Interval Clock) not active at address XX
3. Access level address error at XXXXXX (YYYYYY), memory fault address = XXXXXX (YYYYYY)
4. Address fault is SVC at XXXXXX (YYYYYY)
5. Alignment fault instruction at XXXXXX (YYYYYY), memory fault address = XXXXXX (YYYYYY)
6. Floating point functional range error at XXXXXX

Notes for Figure 6-1 (System Fault Isolation Flowchart) (continued)

(13) OS/32 ERROR MESSAGES

Operating System Alarms

7. Decimal overflow error at XXXXXX (YYYYYY),
next instruction at XXXXXX (YYYYYY)

8. Executive privilege error at XXXXXX (YYYYYY),
memory fault address = XXXXXX (YYYYYY)

9. Fixed point-zero divide error at XXXXXX (YYYYYY),
next instruction at XXXXXX (YYYYYY)

10. Fixed point-zero overflow error at XXXXXX (YYYYYY),
next instruction at XXXXXX (YYYYYY)

11. Illegal instruction at XXXXXX (YYYYYY)

12. Illegal SVC-instruction at XXXXXX (YYYYYY),
SVC parameter block at XXXXXX (YYYYYY)

13. Floating point underflow error at XXXXXX (YYYYYY)

14. Invalid segment address error at XXXXXX (YYYYYY),
memory fault address = XXXXXX (YYYYYY)

15. I/O-ERR Type = XXXX; Segname = YYYY; Segtype = 2222

16. Floating point overflow error at XXXXXX (YYYYYY)

17. Memory error on data fetch at XXXXXX (YYYYYY),
memory fault address = XXXXXX (YYYYYY)

18. Memory error on instruction fetch at XXXXXX (YYYYYY),
memory fault address = XXXXXX (YYYYYY)

19. Floating point zero divide error at XXXXXX (YYYYYY)

20. Non-existent segment error (Process Segment Table {PST}) at XXXXXX (YYYYYY),
memory fault address = XXXXXX (YYYYYY)

21. Non-existent segment error (SST) at XXXXXX (YYYYYY),
memory fault address = XXXXXX (YYYYYY)

22. Packed format-sign error at XXXXXX (YYYYYY),
memory fault address = XXXXXX (YYYYYY)

23. Packed format-data error at XXXXXX (YYYYYY),
memory fault address = XXXXXX (YYYYYY)

24. Read privilege address error at XXXXXX (YYYYYY),
memory fault address = XXXXXX (YYYYYY)

25. Segment limit address error at RRXXXX (YYYYYY),
memory fault address = XXXXXX (YYYYYY)

Notes for Figure 6-1 (System Fault Isolation Flowchart) (continued)

(13) OS/32 ERROR MESSAGES

Operating System Alarms

26. SVC address error-instruction at XXXXX (YYYYYY)

27. SVC parameter block at XXXXXX (YYYYYY)

28. Task paused

29. Undefined data format fault at XXXXX (YYYYYY), memory fault address = XXXXXX (YYYYYY)

30. Write privilege address error at XXXXXX (YYYYYY), memory fault address = XXXXXX (YYYYYY)

(14) ARITHMETIC UNIT (AU) 1-3 BOARD MANIPULATION

The problem experienced here is associated with one of the three AUs in the Programmable Signal Processor (PSP). The AU1 controls displays closest to the center of the PUP display; the AU2 controls the midband ranges; and the AU3 controls the outerband ranges.

The AUs are made up of the following cards:

| Arith Unit | Memory | Input Multiplexor (MUX) | Mult Accum | Output Select |
|---|---|---|---|---|
| AU1 | 5A9A8 | 5A9A9 | 5A9A10 | 5A9A11 |
| AU2 | 5A9A12 | 5A9A13 | 5A9A14 | 5A9A15 |
| AU3 | 5A9A16 | 5A9A17 | 5A9A18 | 5A9A19 |

Interchange the four cards in the AU experiencing the annular ring problem with one of the other AUs not experiencing the problem. Bring the system up and wait for new products to be received. If the problem has migrated to another band, the AU in the band with the annular rings has a bad card. Switch the AUs back to original configuration and replace the bad AU.

| Step | Operator Action | System Response/Comments |
|---|---|---|
| 1. | At the command line on the Main Menu of the Applications Terminal, type **TERP** and then **<Tab>** to parameters line and type in *password* **<CR>**. | |
| 2. | At the Secondary PDP, set the Signal Processor circuit breaker CB16 and 18 to **OFF**. | |
| 3. | Using Electrostatic Discharge (ESD) precautions, remove AU1, AU2, and AU3 from PSP. Be sure to note slot numbers and serial numbers before and after next step. | |

Notes for Figure 6-1 (System Fault Isolation Flowchart) (continued)

(14) ARITHMETIC UNIT (AU) 1-3 BOARD MANIPULATION

| Step | Operator Action | System Response/Comments |
|---|---|---|
| 4. | Put AU1 in AU3 slot<br>Put AU2 in AU1 slot<br>Put AU3 in AU2 slot | |
| 5. | At the Secondary PDP, set circuit breaker CB16 and 18 to **ON**. | |
| 6. | **Simultaneously** press **<Shift>** and **<Port>** keys to get System Console screen.<br>Type **RDAUP<CR>**. | |

(15) SUNCHECK

| | | |
|---|---|---|
| 1. | Ensure the RDA is down. At the command line on the Main Menu of the Applications Terminal, type **TERP <Tab> *password* <CR>.** | |
| 2. | **Simultaneously** press the **<Shift>** and **<Port>** keys to switch to the RDA System Console. | |
| 3. | At the RDA System Console, enter **RDASOT <CR>**. | The Radar Data Acquisition System Operational Test (RDASOT) software program loads and starts. |
| 4. | Enter **3 <CR>** | Calibration menu displayed. |
| 5. | Enter **2 <CR>** | SUNCHECK Test Control Menu displayed. |
| 6. | Type **1 <CR>** | To begin pedestal alignment. |
| 7. | Enter current ***GMT*** in the format displayed on the screen. | |
| 8. | Enter **Y <CR>** | To save the azimuth correction factor. |
| 9. | Enter **Y <CR>** | To save elevation correction factor. |
| 10. | Enter **TERM <CR>** | SUNCHECK Test Control Menu displayed. |
| 11. | Type **Ø <CR>** | |
| 12. | Type **Ø <CR>** | |
| 13. | Type **Ø <CR>** | RDASOT program terminates. |

Notes for Figure 6-1 (System Fault Isolation Flowchart) (continued)

| Step | Operator Action | System Response/Comments |
|---|---|---|
| (16) | CHECK FOR NB LINES CONNECTED AT MSCF | |
| 1. | At the MSCF RPG HCI, click on the light green link between the `RPG` and `USERS` blocks. | This will bring up the `Product Distribution Comms Status` window. |
| 2. | Click **Status** in the `Sorted By:` area below the `Product Distribution Lines` window. | Connected lines will move to the top of the display. |

Notes for Figure 6-2 (RDA Fault Isolation Flowchart)

(1) OS/32 ERROR MESSAGES

The following is a list of operating system error messages which may appear on the system console.

1. I/O Error on voln; Mark off and check bit map error on voln; mark off and check
2. PIC not active at address XX
3. Access level address error XXXXXX (YYYYYY); memory fault address = XXXXXX (YYYYYY)
4. Address fault in SVC at XXXXXX (YYYYYY)
5. Alignment fault instruction at XXXXXX (YYYYYY); memory fault address = XXXXXX (YYYYYY)
6. Floating point functional range error at XXXXXX
7. Decimal overflow error at XXXXXX (YYYYYY); next instruction at XXXXXX (YYYYYY)
8. Executive privilege error at XXXXXX (YYYYYY); memory fault address = XXXXXX (YYYYYY)
9. Fixed point-zero divide error at XXXXXX (YYYYYY); next instruction at XXXXXX (YYYYYY)
10. Fixed point-zero overflow error at XXXXXX (YYYYYY); next instruction at XXXXXX (YYYYYY)
11. Illegal instruction at XXXXXX (YYYYYY)
12. Illegal SVC-instruction at XXXXXX (YYYYYY); SVC parameter block at XXXXXX (YYYYYY)
13. Floating point underflow error at XXXXXX (YYYYYY)
14. Invalid segment address error at XXXXXX (YYYYYY); memory fault address = XXXXXX (YYYYYY)
15. I/O-ERR Type = XXXX; Segname = YYYY; Segtype = 2222
16. Floating point overflow error at XXXXXX (YYYYYY)
17. Memory error on data fetch at XXXXXX (YYYYYY); memory fault address = XXXXXX (YYYYYY)
18. Memory error on instruction fetch at XXXXXX (YYYYYY); memory fault address = XXXXXX (YYYYYY)
19. Floating point zero divide error at XXXXXX (YYYYYY)
20. Non-existent segment error (PST) at XXXXXX (YYYYYY); memory fault address = XXXXXX (YYYYYY)

Notes for Figure 6-2 (RDA Fault Isolation Flowchart) (continued)

(1) OS/32 ERROR MESSAGES

21. Non-existent segment error (SST) at XXXXXX (YYYYYY); memory fault address = XXXXXX (YYYYYY)
22. Packed format-sign error at XXXXXX (YYYYYY); memory fault address = XXXXXX (YYYYYY)
23. Packed format-data error at XXXXXX (YYYYYY); memory fault address = XXXXXX (YYYYYY)
24. Read privilege address error at XXXXXX (YYYYYY); memory fault address = XXXXXX (YYYYYY)
25. Segment limit address error at RRXXXX (YYYYYY); memory fault address = XXXXXX (YYYYYY)
26. SVC address error-instruction at XXXXXX (YYYYYY)
27. SVC parameter block at XXXXXX (YYYYYY)
28. Task paused
29. Undefined data format fault at XXXXXX (YYYYYY); memory fault address = XXXXXX (YYYYYY)
30. Write privilege address error at XXXXXX (YYYYYY); memory fault address = XXXXXX (YYYYYY)

**NOTE**

An error message consisting of only a 3-digit number is called a crash code. If a crash code is present on the screen, record the crash code number and continue with the fault isolation procedure.

(2) EXERCISE THE STREAMING TAPE (RDA)

| Step | Operator Action | System Response/Comments |
|---|---|---|
| 1. | At the RDA M3200 Processor, insert a blank tape into the SCSI drive. Ensure that it is ready to write on and that the black pointer at the top of the tape is not pointing to the safe position. | |
| 2. | At the RDA System Console, enter:<br>**LO BACKUP,5ØØ<Return>**<br>**ST,IN=DSCØ:,OUT=STØ:,**<br>**LI=CON:,SIZ=3ØØ,SEL=CON:,**<br>**DEL,VER,END <Return>** | The screen should display the `BACKUP` prompt. |

Notes for Figure 6-2 (RDA Fault Isolation Flowchart) (continued)

(2) EXERCISE THE STREAMING TAPE (RDA)

| Step | Operator Action | System Response/Comments |
|---|---|---|
| 3. | At the `BACKUP>` prompt, enter: **RDAUP.CSS <Return>** **./ <Return>** | The screen should give a series of messages ending with `End of Task=0`. |
| 4. | If `End of Task=0` appears, the tape works. At the RDA M3200 Processor, remove the blank tape from SCSI drive. | |

(3) BRING RDA TO OPERATE WITH COMMAND OPERATE

**NOTE**

This procedure applies to non-redundant systems and control channel of redundant systems.

| Step | Operator Action | System Response/Comments |
|---|---|---|
| 1. | At the RDA Applications Terminal: | |
| | a. On the command line, enter **OPER**. | |
| | b. Press **<Return>** key. | At the Applications Terminal, `OPERATE` should appear next to the word `STATUS`. |

**NOTE**

If this does not re-initialize the system correctly, the CPCI 01 program may have to be stopped again and the RDA processor rebooted. Make sure the software disks are marked off before rebooting. (Refer to paragraph 4-6.4.1 ).

(4) PERFORM DAU DIAGNOSTICS

| Step | Operator Action | System Response/Comments |
|---|---|---|
| 1. | At the RDA Applications Terminal: | |
| | a. On the command and parameter lines, enter **TERP<Tab>*password*** **<Return>**. | Puts the transmitter in standby mode, places the antenna in park, and terminates the application program. |
| | b. Press the **<Shift>** and **<Port>** keys **simultaneously**. | Switches to RDA System Console. |

Notes for Figure 6-2 (RDA Fault Isolation Flowchart) (continued)

(4) PERFORM DAU DIAGNOSTICS

| Step | Operator Action | System Response/Comments |
|---|---|---|
| 2. | At the RDA System Console: | |
| | a. Enter: | |
| | **RDASOT <Return>** | Brings up RDASOT and displays Main Menu. |
| | **2<Return>** | Displays Diagnostic Menu. |
| | **1<Return>** | For DAU Diagnostics. |
| | **3<Return>** | To select All Subtests. |
| | **1<Return>** | To select Begin Subtest Execution. Follow prompts to complete test. |
| | b. At completion of test, enter **Ø<Return>**. | To return to Diagnostic Menu. |
| | c. If terminating RDASOT is desired, enter: | |
| | **Ø<Return>** | To return to Main Menu. |
| | **Ø<Return>** | To terminate RDASOT. This is indicated by: `RDASOTXX:END OF TASK 0` |

(5) ADVISORY MESSAGES

The following is a list of advisory messages along with their corresponding remarks.

| Advisory Message | Remarks |
|---|---|
| CONSTANT LOAD COMPLETE | This message informs you that the constant values were successfully loaded. |
| CONTROL STORE MEMORY TEST COMPLETE | This message informs you of successful completion of the control store memory test. |
| FAILURE IN AUTOMATIC BOOT PROCESS | This message informs you that the booting process failed. Retry the booting operation. If rebooting fails, run the self-test to check for hardware faults. |
| LOAD COMPLETE | This message informs you of a successful microcode loading. |
| MICRODIAGNOSTIC TEST COMPLETE | This message informs you of successful completion of the microdiagnostic self-test. |
| PROGRAMMING EEPROM | This message informs you that the CDS is programming the microprocessor's EEPROM. |

Notes for Figure 6-2 (RDA Fault Isolation Flowchart) (continued)

(5) ADVISORY MESSAGES

| Advisory Message | Remarks |
|---|---|
| INITIALIZATION IN PROCESS - COMMAND WAS NOT PROCESSED | This message informs you that a command was issued before the initialization process was completed. |
| INVALID COMMAND, MICROCODE IN HALT MODE | This message informs the operator that the microcode is not running and that the console operator attempted to use the HALT command or attempted to examine or modify registers, memory, or the PSW. Use the START command to begin microcode execution. |
| INVALID COMMAND, MICROCODE IN RUN MODE | This message informs you that the microcode is in the RUN state and that the operator attempted to examine or modify registers, memory, or the PSW. Use the HALT command to end instruction execution. |
| INVALID COMMAND, MICROCODE NOT STARTED | This message informs you that the microcode is not running and that the console operator attempted to use the HALT command or attempted to examine or modify registers, memory, or the PSW. All of these operations require running microcode. |
| INVALID COMMAND, MICROCODE STARTED | This message informs you that the operator attempted to examine or modify control store while microcode was being executed. |
| INVALID COMMAND, SINGLE IS REQUIRED | This message informs you that the operator attempted to issue a RUN or similar command. A SINGLE STEP command is required. |

(6) BRING DOWN CPCI-01 PROGRAM AND RUN RCVR DIAG SUBTEST 5

| Step | Operator Action | System Response/Comments |
|---|---|---|
| 1. | At the RDA Applications Terminal: | |
| | a. On the command and parameter lines, enter **TERP<Tab>*password*<Return>**. | Puts the transmitter in standby mode, places the antenna in park, and terminates the application program. |
| | b. Press the **<Shift>** and **<Port>** keys **simultaneously**. | Switches to RDA System Console. |

Notes for Figure 6-2 (RDA Fault Isolation Flowchart) (continued)

(6) BRING DOWN CPCI-01 PROGRAM AND RUN RCVR DIAG SUBTEST 5

| Step | Operator Action | System Response/Comments |
|---|---|---|
| 2. | At the RDA System Console: | |
| | a. Enter: | |
| | **RDASOT <Return>** | Brings up RDASOT. Displays Main Menu. |
| | **2<Return>** | Displays Diagnostic Menu. |
| | **6<Return>** | For Receiver Diagnostics. |
| | **4<Return>** | To Deselect All Subtests. |
| | **5<Return>** | To Select Individual Subtests. |
| | **1<Return>** | To select Subsets 1 thru 10. |
| | **5<Return>** | To select Subtest 5 - Klystron RF Signal<br>Note `SELECTED` is displayed for Subtest 5. |
| | **Ø<Return>** | To select Return to Subtest Menu. |
| | **Ø<Return>** | To select Subtest Selection Complete. |
| | **1<Return>** | To select Begin Subtest Execution. |
| | b. At completion of test, enter **Ø<Return>**. | To return to Diagnostic Menu. |
| | c. If terminating RDASOT is desired, enter: | |
| | **Ø<Return>** | To return to the Main Menu. |
| | **Ø<Return>** | To terminate RDASOT. This is indicated by:<br>`RDASOTXX:END OF TASK 0` |

(7) PERFORM THE PFN TOGGLE TEST

| Step | Operator Action | System Response/Comments |
|---|---|---|
| 1. | At the RDA Applications Terminal: | |
| | a. On the command and parameter lines, enter **TERP<Tab>*password*<Return>**. | Puts the transmitter in standby mode, places the antenna in park, and terminates the application program. |
| | b. Press the **<Shift>** and **<Port>** keys **simultaneously**. | Switches to RDA System Console. |

Notes for Figure 6-2 (RDA Fault Isolation Flowchart) (continued)

(7) PERFORM THE PFN TOGGLE TEST

| Step | Operator Action | System Response/Comments |
|---|---|---|
| 2. | At the RDA System Console: | |
| | a. Enter: | |
| | **RDASOT <Return>** | Brings up RDASOT. Displays Main Menu. |
| | **2<Return>** | Displays Diagnostic Menu. |
| | **7<Return>** | For Transmitter Diagnostics. |
| | **4<Return>** | To Deselect All Subtests. |
| | **5<Return>** | To Select Individual Subtests. |
| | **2<Return>** | To Select Subtest 2 - PFN Toggle Check. Note `SELECTED` is displayed for Subtest 2. |
| | **Ø<Return>** | To select Subtest Selection Complete. |
| | **1<Return>** | To select Begin Subtest Execution. |
| | b. At completion of test, enter **Ø<Return>** | To return to Diagnostic Menu. |
| | c. If terminating RDASOT is desired, enter: | |
| | **Ø<Return>** | To return to the Main Menu. |
| | **Ø<Return>** | To terminate RDASOT. This is indicated by: `RDASOTXX:END OF TASK 0` |

(8) VERIFY WAVEFORM AT TEST POINT UD3A10A1TP7

See Figure 6-6, Charging Switch Peak Primary Current Waveform in Transmitter Manual NWS EHB 6-511 for UD3A10A1TP7 waveform.

(9) PERFORM RCVR DIAGNOSTIC SUBTEST 4

| Step | Operator Action | System Response/Comments |
|---|---|---|
| 1. | At the RDA Applications Terminal: | |
| | a. On the command and parameter lines, enter **TERP<Tab>*password* <Return>**. | Puts the transmitter in standby mode, places the antenna in park, and terminates the application program. |
| | b. Press the **<Shift>** and **<Port>** keys **simultaneously**. | Switches to RDA System Console. |

Notes for Figure 6-2 (RDA Fault Isolation Flowchart) (continued)

(9) PERFORM RCVR DIAGNOSTIC SUBTEST 4

| Step | Operator Action | System Response/Comments |
|---|---|---|
| 2. | At the RDA System Console: | |
| | a. Enter: | |
| | **RDASOT <Return>** | Brings up RDASOT. Displays Main Menu. |
| | **2<Return>** | Displays Diagnostic Menu. |
| | **6<Return>** | For Receiver Diagnostics. |
| | **4<Return>** | To Deselect All Subtests. |
| | **5<Return>** | To Select Individual Subtests. |
| | **1<Return>** | To select Subtests 1 thru 10. |
| | **4<Return>** | To select Subtest 4 - Driver RF Signal. Note `SELECTED` is displayed for Subtest 4. |
| | **Ø<Return>** | To select Return to Subtest Menu. |
| | **Ø<Return>** | To select Subtest Selection Complete. |
| | **1<Return>** | To select Begin Subtest Execution. |
| | b. At completion of test, enter **Ø<Return>**. | To return to Diagnostic Menu. |
| | c. If terminating RDASOT is desired, enter: | |
| | **Ø<Return>** | To return to the Main Menu. |
| | **Ø<Return>** | To terminate RDASOT. This is indicated by: `RDASOTXX:END OF TASK 0` |

(10) PERFORM THE PEDESTAL DIAGNOSTICS

**NOTE**

This procedure applies to non-redundant systems and control channel of redundant systems.

| Step | Operator Action | System Response/Comments |
|---|---|---|
| 1. | At the RDA Applications Terminal: | |
| | a. On the command and parameter lines, enter **TERP<Tab>*password*** **<Return>**. | Puts the transmitter in standby mode, places the antenna in park, and terminates the application program. |
| | b. Press the **<Shift>** and **<Port>** keys **simultaneously**. | Switches to RDA System Console. |

Notes for Figure 6-2 (RDA Fault Isolation Flowchart) (continued)

(10) PERFORM THE PEDESTAL DIAGNOSTICS

| Step | Operator Action | System Response/Comments |
|---|---|---|
| 2. | At the RDA System Console: | |
| | a. Enter:<br>**RDASOT <Return>**<br>**2<Return>**<br>**3<Return>**<br>**1<Return>** | <br>Brings up RDASOT. Displays Main Menu.<br>Displays Diagnostic Menu.<br>To select Pedestal Diagnostics.<br>To select Begin Subtest Execution. |
| | b. At completion of the test, enter **Ø<Return>**. | To return to Diagnostic Menu. |
| | c. If terminating RDASOT is desired, enter:<br>**Ø<Return>**<br>**Ø<Return>** | <br>To Return to Main Menu.<br>To terminate RDASOT. This is indicated by:<br>`RDASOTXX:END OF TASK 0` |

(11) PERFORM ELEVATION DRIVE OUT

| Step | Operator Action | System Response/Comments |
|---|---|---|
| 1. | At the RDA Applications Terminal: | |
| | a. On the command and parameter lines, enter **TERP<Tab>*password*<Return>**. | Puts the transmitter in standby mode, places the antenna in park, and terminates the application program. |
| | b. Press the **<Shift>** and **<Port>** keys **simultaneously**. | Switches to RDA System Console. |
| 2. | At the RDA System Console: | |
| | a. Enter:<br>**RDASOT <Return>**<br>**4<Return>**<br>**1<Return>**<br>**2<Return>** | <br>Brings up RDASOT. Displays Main Menu.<br>Displays Manual Control and Display Menu.<br>To select Control Pedestal.<br>To select Park Pedestal. Verify park Positions and Pedestal Values. |
| | b. At completion of test, enter **Ø<Return>**. | Returns to Manual Control and Display Menu. |

Notes for Figure 6-2 (RDA Fault Isolation Flowchart) (continued)

(11) PERFORM ELEVATION DRIVE OUT

| Step | Operator Action | System Response/Comments |
|---|---|---|
| | c. If terminating RDASOT is desired, enter: | |
| | **Ø<Return>** | To return to Main Menu. |
| | **Ø<Return>** | To terminate RDASOT. This is indicated by: `RDASOTXX:END OF TASK 0` |

(12) CHECK AZIMUTH TACH VOLTAGE

**NOTE**

This procedure applies to non-redundant systems and control channel of redundant systems.

Pull out the DCU and remove top cover. Connect DVM between UD5A6A1J12 Pin 6 (in center of analog board) and ground. Perform Azimuth Tach Adjustment per paragraph 6-6.30.4.1 . A non-zero rate is defined as a voltage greater than 0.1 Vdc.

(13) PERFORM ELEVATION DRIVE

**NOTE**

This procedure applies to non-redundant systems and control channel of redundant systems.

| Step | Operator Action | System Response/Comments |
|---|---|---|
| 1. | At the RDA Applications Terminal: | |
| | a. On the command and parameter lines, enter **TERP<Tab>*password*<Return>**. | Puts the transmitter in standby mode, places the antenna in park, and terminates the application program. |
| | b. Press the **<Shift>** and **<Port>** keys **simultaneously**. | Switches to RDA System Console. |

Notes for Figure 6-2 (RDA Fault Isolation Flowchart) (continued)

(13) PERFORM ELEVATION DRIVE

| Step | Operator Action | System Response/Comments |
|---|---|---|
| 2. | At the RDA System Console: | |
| | a. Enter:<br>**RDASOT <Return>**<br>**4<Return>**<br>**1<Return>**<br>**3<Return>**<br>**2<Return>**<br>**1Ø<Return>**<br><br><br>**Ø<Return>** | <br>Brings up RDASOT. Displays Main Menu.<br>Displays Manual Control and Display Menu.<br>To select Control Pedestal.<br>To select Pedestal Manual Control.<br>To select Command Elevation Position.<br>Command elevation angle of 10.<br>`PEDESTAL VALUES` table is displayed. Verify EL POS went to commanded position of 10.<br>To select Terminate Manual Control. |
| | b. At completion of test, enter **Ø<Return>**. | To select Return to MCD Menu. Returns to Manual Control and Display Menu. |
| | c. If terminating RDASOT is desired, enter:<br>**Ø <Return>**<br>**Ø <Return>** | <br>To return to Main Menu.<br>To terminate RDASOT. This is indicated by:<br>`RDASOTXX:END OF TASK 0` |

(14) PERFORM AZIMUTH DRIVE TEST

**NOTE**

This procedure applies to non-redundant systems and control channel of redundant systems.

| Step | Operator Action | System Response/Comments |
|---|---|---|
| 1. | At the RDA Applications Terminal: | |
| | a. On the command and parameter lines, enter **TERP<Tab>*password*<Return>**. | Puts the transmitter in standby mode, places the antenna in park, and terminates the application program. |
| | b. Press the **<Shift>** and **<Port>** keys **simultaneously**. | Switches to RDA System Console. |

Notes for Figure 6-2 (RDA Fault Isolation Flowchart) (continued)

(14) PERFORM AZIMUTH DRIVE TEST

| Step | Operator Action | System Response/Comments |
|---|---|---|
| 2. | At the RDA System Console: | |
| | a. Enter: | |
| | **RDASOT <Return>** | Brings up RDASOT. Displays Main Menu. |
| | **4<Return>** | Displays Manual Control and Display Menu. |
| | **1<Return>** | To select Control Pedestal. |
| | **3<Return>** | To select Pedestal Manual Control. |
| | **1<Return>** | To select Command Azimuth Position. |
| | **3Ø<Return>** | `PEDESTAL VALUES` table is displayed. Verify AZ POS went to commanded position of 30. |
| | **Ø<Return>** | To select Terminate Manual Control. |
| | b. At completion of test, enter **Ø<Return>**. | To select Return to MCD Menu. Returns to Manual Control and Display Menu. |
| | c. If terminating RDASOT is desired, enter: | |
| | **Ø<Return>** | To return to Main Menu. |
| | **Ø<Return>** | To terminate RDASOT. This is indicated by: `RDASOTXX:END OF TASK 0` |

(15) PERFORM RECEIVER DIAGNOSTICS

**NOTES**

A quick test of receiver path losses can be performed using the RIOS functionality of RDASOT receiver manual control. See paragraph 6-6.31.3 for additional information.

Receiver diagnostics are dependent on proper alignment of the RF/IF Test Monitor (paragraph 6-6.26.3 ). Improper alignment will indicate component failures or erroneous RDASOT “Expected/Measured” readings when receiver diagnostics are utilized.

Subtest 17 Guardband (+) IF amplifier test and Subtest 18 Guardband (-) IF amplifier test are only performed at sites with the optional Interference Suppression Unit installed. If the ISU is not installed, deselect Subtests 17 and 18.

| Step | Operator Action | System Response/Comments |
|---|---|---|
| 1. | At the RDA Applications Terminal: | |
| | a. On the command and parameter lines, enter **TERP<Tab>*password*<Return>**. | Puts the transmitter in standby mode, places the antenna in park, and terminates the application program. |

Notes for Figure 6-2 (RDA Fault Isolation Flowchart) (continued)

(15) PERFORM RECEIVER DIAGNOSTICS

| Step | Operator Action | System Response/Comments |
|---|---|---|
| | b. Press the **<Shift>** and **<Port>** keys **simultaneously**. | Switches to RDA System Console. |
| 2. | At the RDA System Console: | |
| | a. Enter:<br>**RDASOT <Return>**<br>**2<Return>**<br>**6<Return>**<br>**3<Return>**<br>**1<Return>** | <br>Brings up RDASOT. Displays Main Menu.<br>Displays Diagnostic Menu.<br>For Receiver Diagnostics Menu.<br>To Select All Subtests.<br>To select Begin Subtest Execution.<br>Follow prompts displayed. |
| | b. At completion of the test, enter **Ø<Return>**. | To return to Diagnostic Menu. |
| | c. If terminating RDASOT is desired, at completion of test, enter<br>**Ø<Return>**.<br>**Ø<Return>** | <br>To return to Main Menu.<br>To terminate RDASOT. This is indicated by:<br>`RDASOTXX: END OF TASK 0` |

(16) DEFINITION OF BASIC CONFIDENCE CHECK

`BASIC CONFIDENCE TEST COMPLETE` is displayed when the system boots. If the "`*`" prompt comes up and the RDA begins to boot, the `BASIC CONFIDENCE TEST COMPLETE` has scrolled by on the screen.

(17) PERFORM HSP DIAGNOSTIC TEST

| Step | Operator Action | System Response/Comments |
|---|---|---|
| 1. | At the RDA Applications Terminal: | |
| | a. On the command and parameter lines, enter<br>**TERP<Tab>*password***<br>**<Return>**. | Puts the transmitter in standby mode, places the antenna in park, and terminates the application program. |
| | b. Press the **<Shift>** and **<Port>** keys **simultaneously**. | Switches to RDA System Console. |

Notes for Figure 6-2 (RDA Fault Isolation Flowchart) (continued)

(17) PERFORM HSP DIAGNOSTIC TEST

| Step | Operator Action | System Response/Comments |
|---|---|---|
| 2. | At the RDA System Console: | |
| | a. Enter:<br>**RDASOT <Return>**<br>**2<Return>**<br>**5<Return>**<br>**3<Return>**<br>**1<Return>** | <br>Brings up RDASOT. Displays Main Menu.<br>Displays Diagnostic Menu.<br>To select HWSP Diagnostics.<br>To Select All Subtests.<br>To select Begin Subtest Execution. |
| | b. At completion of test, enter **Ø<Return>**. | To return to Diagnostic Menu. |
| | c. If terminating RDASOT is desired, enter:<br>**Ø<Return>**<br>**Ø<Return>** | <br>To Return to Main Menu.<br>To terminate RDASOT. This is indicated by:<br>`RDASOTXX:END OF TASK 0` |

(18) PERFORM PSP SUBTEST 6, 11, 22, 31, and 32

| Step | Operator Action | System Response/Comments |
|---|---|---|
| 1. | At the RDA Applications Terminal: | |
| | a. On the command and parameter lines, enter **TERP<Tab>*password*** **<Return>**. | Puts the transmitter in standby mode, places the antenna in park, and terminates the application program. |
| | b. Press the **<Shift>** and **<Port>** keys **simultaneously**. | Switches to RDA System Console. |

Notes for Figure 6-2 (RDA Fault Isolation Flowchart) (continued)

(18) PERFORM PSP SUBTEST 6, 11, 22, 31, and 32

| Step | Operator Action | System Response/Comments |
|---|---|---|
| 2. | At the RDA System Console: | |
| | a. Enter: | |
| | **RDASOT <Return>** | Brings up RDASOT. Displays Main Menu. |
| | **2<Return>** | Displays Diagnostic Menu. |
| | **4<Return>** | To select PSP Diagnostics. |
| | **4<Return>** | To Deselect All Subtests. |
| | **5<Return>** | To Select Individual Subtests. |
| | **1<Return>** | To select Subtests 1 thru 10. |
| | **6<Return>** | To select Subtest 6 - Control Store Memory. Note SELECTED is displayed for Subtest 6. |
| | **Ø<Return>** | To return to Multiple Screen Subtest Selection Menu. |
| | **2<Return>** | To select Subtests 11 thru 20. |
| | **1<Return>** | To select Subtest 11 - ACU Command Banks. Note SELECTED is displayed for Subtest 11. |
| | **Ø<Return>** | To return to Multiple Screen Subtest Selection Menu. |
| | **3<Return>** | To select Subtests 21 thru 30. |
| | **2<Return>** | To select Subtest 22 - AU PROMS. Note SELECTED is displayed for Subtest 22. |
| | **Ø<Return>** | To return to Multiple Screen Subtest Selection Menu. |
| | **4<Return>** | To select Subtests 31 thru 32. |
| | **1<Return>** | To select Subtest 31 - ISC Functional. Note SELECTED is displayed for Subtest 31. |
| | **2<Return>** | To select Subtest 32 - ISC Interface. Note SELECTED is displayed for Subtest 32. |
| | **Ø<Return>** | To return to Multiple Screen Subtest Selection Menu. |
| | **Ø<Return>** | To select Subtest Selection Complete. |
| | **1<Return>** | To select Begins Subtest Execution. |
| | b. At completion of test, enter **Ø<Return>** | To return to Diagnostic Menu. |

Notes for Figure 6-2 (RDA Fault Isolation Flowchart) (continued)

(18) PERFORM PSP SUBTEST 6, 11, 22, 31, and 32

| Step | Operator Action | System Response/Comments |
|---|---|---|
| | c. If terminating RDASOT is desired, enter: | |
| | **Ø<Return>** | To return to Main Menu. |
| | **Ø<Return>** | To terminate RDASOT. This is indicated by: `RDASOTXX:END OF TASK 0` |

(19) RECYCLE RDA POWER

| Step | Operator Action | System Response/Comments |
|---|---|---|
| 1. | At the RDA Applications Terminal enter: | |

**NOTE**

If Main Menu is displayed, proceed to step b.

| | | |
|---|---|---|
| | a. **MAIN<Return>** at command entry line. | Observe that Main Menu appears on display. |
| | b. **RELC<Return>** at command entry line. | See Note below. |

**NOTE**

Entering RELC sends a request to the RPG to allow the RDA to go to local control. To actually switch from remote to local control requires that the RPG enables local control. The sequence of the two commands does not matter.

| | | |
|---|---|---|
| 2. | At the RDA Applications Terminal: | |
| | a. On the command and parameter lines, enter **TERP<Tab>*password*<Return>**. | Puts the transmitter in standby mode, places the antenna in park, and terminates the application program. |
| | b. Press the **<Shift>** and **<Port>** keys **simultaneously**. | Switches to RDA System Console. |

**NOTE**

Wait for `TASK 02: END OF TASK` to appear.

| | | |
|---|---|---|
| | c. Enter **ERR LOG,OFF<Return>** | |
| | d. Enter **D TA<Return>** | Observe that no tasks (other than time) are running. If tasks are running, cancel tasks by entering **CA *taskid***. |

Notes for Figure 6-2 (RDA Fault Isolation Flowchart) (continued)

(19) RECYCLE RDA POWER

| Step | Operator Action | System Response/Comments |
|---|---|---|
| | e. Enter **MA DSCØ:,OFF<Return>** | |
| | f. Enter **D D<Return>** | Observe that DCS0 is marked OFF on display monitor. |
| 3. | At the RDA System Console: | |
| | a. **Simultaneously** press **<Ctrl>** and **<V>** keys twice and then press **<Return>** to enter the CDS mode. | CDS> prompt appears. |
| | b. Enter **KEY 1, *password* <Return>** | |
| | c. Enter **HA<Return>** | Stops the CPU. |
| | d. Enter **PO OFF<Return>** | Shuts off power to cabinet and turns off P5 and P5U. |
| | e. Enter **STA 1,28<Return>** | Verify P5 and P5U are off. |
| | f. Enter **PO ON<Return>** | Turns on power to cabinet. |

(20) PREHEAT TIMING TEST

| Step | Operator Action | System Response/Comments |
|---|---|---|
| 1. | At the Transmitter Power Distribution Panel UD3A13: | |
| | a. Place the high voltage power circuit breaker CB1 to **OFF** position and leave in OFF position for the duration of the test. | |
| | b. Place the auxiliary power circuit breaker CB2 to **OFF** position, leave in OFF position for 25 ± 2 seconds, and then place CB2 to **ON** position. PREHEAT indicator should remain off. | |
| | c. Place CB2 to **OFF** position for 120 ± 4 seconds and then place CB2 to **ON** position. PREHEAT indicator should illuminate. | This concludes the preheat test. |

Notes for Figure 6-2 (RDA Fault Isolation Flowchart) (continued)

(20) PREHEAT TIMING TEST

| Step | Operator Action | System Response/Comments |
|---|---|---|
| 2. | To return to normal operation, place CB1 to **ON** position when the PREHEAT indicator goes off and the AVAILABLE indicator illuminates. | |

(21) PERFORM PSP SUBTESTS (DESELECT 6, 11, 22, 31, and 32)

| Step | Operator Action | System Response/Comments |
|---|---|---|
| 1. | At the RDA Applications Terminal: | |
| | a. On the command and parameter lines, enter **TERP<Tab>*password*<Return>**. | Puts the transmitter in standby mode, places the antenna in park, and terminates the application program. |
| | b. Press the **<Shift>** and **<Port>** keys **simultaneously**. | Switches to RDA System Console. |
| 2. | At the RDA System Console: | |
| | a. Enter | |
| | **RDASOT <Return>** | Brings up RDASOT. Displays Main Menu. |
| | **2<Return>** | Displays Diagnostic Menu. |
| | **4<Return>** | To select PSP Diagnostics |
| | **3<Return>** | To Select All Subtests. |
| | **5<Return>** | To Select Individual Subtests. |
| | **1<Return>** | To select Subtests 1 thru 10. |
| | **6<Return>** | To Deselect Subtest 6. Note SELECTED is **not** displayed for Subtest 6. |
| | **Ø<Return>** | To return to Multiple Screen Subtest Selection Menu. |
| | **2<Return>** | To select Subtests 11 thru 20. |
| | **1<Return>** | To Deselect Subtest 11. Note SELECTED is **not** displayed for Subtest 11. |
| | **Ø<Return>** | To return to Multiple Screen Subtest Selection Menu. |
| | **3<Return>** | To select Subtests 21 thru 30. |
| | **2<Return>** | To deselect Subtest 22. Note SELECTED is **not** displayed for Subtest 22. |
| | **Ø<Return>** | To return to Multiple Screen Subtest Selection Menu. |
| | **4<Return>** | To select Subtests 31 thru 32. |

Notes for Figure 6-2 (RDA Fault Isolation Flowchart) (continued)

(21) PERFORM PSP SUBTESTS (DESELECT 6, 11, 22, 31, and 32)

| Step | Operator Action | System Response/Comments |
|---|---|---|
| | **1<Return>** | To deselect Subtest 31.<br>Note `SELECTED` is **not** displayed for Subtest 31. |
| | **2<Return>** | To deselect Subtest 32.<br>Note `SELECTED` is **not** displayed for Subtest 32. |
| | **Ø<Return>** | To return to Multiple Screen Subtest Selection Menu. |
| | **Ø<Return>** | To select Subtest Selection Complete. |
| | **1<Return>** | To select Begin Subtest Execution. |
| | b. At completion of test, enter **Ø<Return>**. | To return to Diagnostic Menu. |
| | c. If terminating RDASOT is desired, enter: | |
| | **Ø<Return>** | To return to Main Menu. |
| | **Ø<Return>** | To terminate RDASOT. This is indicated by: `RDASOTXX:END OF TASK 0` |

(22) RECONFIGURE CDS SOFTWARE TO NORMAL CONFIGURATION

| Step | Operator Action | System Response/Comments |
|---|---|---|
| | **NOTE**<br>If CDS prompt is present proceed to step 2.b. | |
| 1. | At the RDA Applications Terminal: | |
| | a. On the command and parameter lines, enter **TERP<Tab>*password*<Return>**. | Puts the transmitter in standby mode, places the antenna in park, and terminates the application program. |
| | b. Press the **<Shift>** and **<Port>** keys **simultaneously**. | Switches to RDA System Console. |
| 2. | At the RDA System Console: | |
| | a. Enter:<br>**ERR LOG,OFF <Return>**<br>**MA DSCØ:OFF <Return>** | Marks Error Logger Off.<br>Marks Disk 0 Off. |
| | b. **Simultaneously** press **<Ctrl>** and **<V>** twice, and then press **<Return>**. | `CDS>` prompt appears. |

Notes for Figure 6-2 (RDA Fault Isolation Flowchart) (continued)

(22) RECONFIGURE CDS SOFTWARE TO NORMAL CONFIGURATION

| Step | Operator Action | System Response/Comments |
|---|---|---|
| 2. cont. | c. Enter:<br>**USING 1,4 <Return>**<br>**HA <Return>**<br>**CLE 1,4 <Return>**<br>**SET 1,4,M32ØØ,Ø,254,**<br>**E,W,58,D9,D8,FØ,**<br>***XXXX*,CPU <Return>**<br>**REV 1,4 <Return>**<br>**SET 1,6,CMM,Ø,E,Ø <Return>**<br>**SET 1,5,DMI <Return>**<br>**INIT <Return>** | Where XXXX=Current OS (Default.OS). If current OS is unknown, enter 0. |

(23) PROCEDURE FOR MARKING DISKS ON

| Step | Operator Action | System Response/Comments |
|---|---|---|
| 1. | At the RDA System Console: | |
| | a. Enter **D D <Return>**. | Displays devices and indicates status. |
| | b. Verify DSCØ is **ON**; if not, mark it on by entering **MA DSCØ:,ON,,CD=AL <Return>** | Marks Disk 0 on. |

(24) PROCEDURE FOR RESETTING TIME

| Step | Operator Action | System Response/Comments |
|---|---|---|
| 1. | At the RDA System Console: | |
| | a. Enter:<br>**CA TIME <Return>**<br>**BGLSETU <Return>**<br>**MM/DD/YY,hh:mm:ss <Return>**<br>**BGLSTART <Return>**<br>**D T <Return>** | Cancels time task.<br>SETIME> prompt is displayed.<br>Where MM=month, DD=day, YY=year, hh=hour, mm=minute, ss=second. (GMT)<br><br>Displays time. |
| | b. Verify time entered is displayed. | |

Notes for Figure 6-2 (RDA Fault Isolation Flowchart) (continued)

(25) CHECK CMM STATUS

| Step | Operator Action | System Response/Comments |
|---|---|---|
| 1. | At the RDA System Console, ensure `CDS>` prompt is present. If not, press the **<Ctrl>** and **<V>** keys simultaneously twice, and then press **<Return>**. | `CDS>` prompt present. |
| 2. | Enter **REV 1 <Return>** | |
| 3. | Note the slot number of the CMM card. | |
| 4. | Enter **STA 1,*[CMM slot number]* <Return>** | The CMM card status is displayed on the screen. |
| 5. | The CMM card's status should be as follows: | |

Normal CMM Status Display

| CMM Status | |
|---|---|
| Part Number | XX* |
| F Abort | No |
| TF Parity | Good |
| ErrLog | Empty |
| ErrBuffer | Good |
| ECC | Enable |
| Refresh | Enable |
| Scrubber | Enable |

*XX = Ø2 - 2MB with 256 KB RAMs
Ø3 - 4MB with 256 KB RAMs
Ø4 - 4MB with 1024 KB RAMs
Ø5 - 8MB with 1024 KB RAMs
Ø6 - 16MB with 1024 KB RAMs
Ø7 - 8MB with 1024 KB RAMs
Ø8 - 16MB with 1024 KB RAMs
Ø9 - 32MB with 1024 KB RAMs

Notes for Figure 6-2 (RDA Fault Isolation Flowchart) (continued)

(26) PERFORM A MEMORY CHECK

| Step | Operator Action | System Response/Comments |
|---|---|---|
| 1. | At the RDA System Console, ensure `CDS>` prompt is present. If not, press the **<Ctrl>** and **<V>** keys **simultaneously** twice, and then press **<Return>**. | `CDS>` prompt present. |
| | **HALT <Return>** | Stops the processor Program |
| | **MOD 1ØØ,ØA21,4Ø31,Ø,2612, Ø912,2Ø84,88ØØ <Return>** | This program writes the contents of R3 to addresses R1 to R1+R2. |
| | **MOD .R1,1ØØØ <Return>** | R1 = 1000 (Start address) |
| | **MOD .R2,1ØØØ <Return>** | R2 = (# of bytes to write) |
| | **MOD .R3,DEAD <Return>** | R3 = DEAD (Halfword to enter) |
| | **MOD .P,Ø <Return>** | Resets program status word |
| | **RUN 1ØØ <Return>** | Observe `Node #01, Slot #04"`<br>`0000 0000 0000`<br>`010C 8800`<br>`BREAK POINT` |
| 2. | Verify that the halfword was written. At the RDA system console enter: **EXA 1ØØØ,144 <Return>** | Starting at address 1000, `DEAD` appears in all locations. |
| 3. | Continue to repeat EXA incrementing 1000 by 100 until 2000. | The halfword `DEAD` should appear in all registers from 1000 to 2000. |
| 4. | When memory check is completed, bring RDA back up. | |
| | a. Enter **CO<Return>** at `CDS>` prompt. | Exits CDS mode.<br>`*` prompt is displayed. |
| | b. Enter **RDAUP<Return>**. | |
| | c. **Simultaneously** press **<Shift>** and **<Port>** keys to switch to Applications Terminal. | Exits system console mode. |

Notes for Figure 6-2 (RDA Fault Isolation Flowchart) (continued)

| Step | Operator Action | System Response/Comments |
|---|---|---|
| (27) | CHECK SELCH BUSY | |
| | On the backplane of SELCH UD5A12A15, locate Connector 1 pin 224 (XBSYØ). Probe pin 224 with a logic probe and observe its state (light ON/ OFF). Get power for the probe by connecting the probe's receptacle with the red dot to Connector 0 pin 100 and the other receptacle to Connector 0 pin 200. If there are terminators on SELCH F0 in slot 4 (on the backplane), they must be moved to slot 2 (SELCH F1) on the backplane. Remove the two screws that attach each of two retaining bars at the rear of the expansion chassis UD5A12 in order to relocate the terminators. | |
| (28) | CHECK SYNC | |
| | On the backplane of SELCH UD5A12A15, locate Connector 1 pin 123 (PSYNØ). Probe pin 123 with a logic probe and observe its state (light ON/ OFF). Get power for the probe by connecting the probe's receptacle with the red dot to Connector 0 pin 100 and the other receptacle to Connector 0 pin 200. | |
| (29) | TRANSMITTER RDA PERFORMANCE DATA | |
| 1. | At the RDA Applications Terminal, on the command and parameter lines, enter **DIPD<Tab>XMT<Return>**. | Access Transmitter Performance Data. |

The following table correlates the Transmitter Fault Monitor UD3A1A1 LED indications with the RDA Performance Data text.

| Fault Monitor (FM) Alarm | Performance Data (PD) Indication |
|---|---|
| Main Power Overvoltage | Main PWR Voltage |
| LVPS Fault Summary | +5V PS |
| LVPS Fault Summary | +15V PS |
| LVPS Fault Summary | -15V PS |
| LVPS Fault Summary | +28V PS |
| LVPS Fault Summary | +45V PS |
| Power Supply Filament Voltage | Filament PS |
| Power Supply Vacuum Pump Voltage | Vac Pump PS |
| Power Supply Focus Coil Voltage | Focus Coil PS |
| Transmitter Overvoltage | XMTR Overvoltage |
| Transmitter Overcurrent | XMTR Overcurrent |
| Focus Coil Current | Focus Coil Cur |
| Focus Coil Airflow | Focus Coil Airflow |
| Trigger Amp Fault Summary | Trigger Amp |
| Charging System Inverse Current/UV | Inv Diode Curr |
| Charging System Failure | Flyback Charger |

Notes for Figure 6-2 (RDA Fault Isolation Flowchart) (continued)

| Step | Operator Action | System Response/Comments |
|---|---|---|
| (29) | TRANSMITTER RDA PERFORMANCE DATA | |
| | Fault Monitor (FM) Alarm | Performance Data (PD) Indication |
| | Modulator Overload | Mod Overload |
| | Modulator Inverse Current | Mod Inv Current |
| | Modulator Switch Failure | Mod Switch Fail |
| | Klystron Overcurrent | Klys Current |
| | Klystron Filament Current | Klys Filament Cur |
| | Klystron Vacuum Pump Current | Klystron Vacion Cur |
| | Klystron Air Temp | Klys Air Temp |
| | Klystron Air Flow | Klys Airflow |
| | Waveguide Pressure, Humid | WG Press/HMD |
| | Waveguide ARC | WG ARC/VSWR |
| | Oil Level | Oil Level |
| | Oil Temp | Oil Temp |
| | Antenna Waveguide Interlock | WG/PFN XFER Intlk |
| | Antenna Circulator Temp | Circulator Temp |
| | Cabinet Door Interlock | Cabinet Intlk |
| | Cabinet Air Temp | Cabinet Air Temp |
| | Cabinet Air Flow | Cabinet Air Flow |
| | Maint Required PRF Limit | PRF Limit |
| | Maint Required - W/G Pressure Humid | Spect Fltr Press |
| | Maint Required - Modulation Switch | - |
| | Maint Required - Post Charge Regulator | _ |
| (30) | EL BACKLASH SETTING/RESETTING | |

**NOTE**

This procedure applies to non-redundant systems and control channel of redundant systems.

Refer to Antenna Pedestal System (Limited Production), NWS EHB 6-513, paragraph 2.4.4.3.4 or NWS EHB 6-514, Antenna Pedestal System (Full Scale Production) paragraph 2.4.4.3.4.

(31) AZ BACKLASH SETTING/RESETTING

**NOTE**

This procedure applies to non-redundant systems and control channel of redundant systems.

Notes for Figure 6-2 (RDA Fault Isolation Flowchart) (continued)

| Step | Operator Action | System Response/Comments |
|---|---|---|
| (31) | AZ BACKLASH SETTING/RESETTING | |
| | Refer to Antenna Pedestal System (Limited Production), NWS EHB 6-513, paragraph 2.4.4.3.4 or NWS EHB 6-514, Antenna Pedestal System (Full Scale Production) paragraph 2.4.4.3.4. | |
| (32) | CHECK SYNCHRONIZER TRIGGERS AND FAULT LEDS | |
| 1. | Open left front door of Transmitter Cabinet UD3. | |
| 2. | Push MAINT/SYSTEM switch to put the transmitter into Maint Mode. Ensure that HV OFF/NO CONTROL switch is illuminated. | |
| 3. | Open the inner front left transmitter door. | |
| 4. | At the RDA System Console, in RDASOT, get to the Control Receiver/Signal Processor Menu. | |
| 5. | Make entries to choose RADAR. | |
| 6. | Make entry to let the transmitter radiate for more than 30 seconds. | |
| 7. | Make entry to choose SHORT PULSE. | |
| 8. | Make entry to choose PRF 321.9 Hz. | |
| 9. | Observe the seven LEDs on the Transmitter Control Adapter UD3A3A4 circuit board. If any are illuminated, there is a trigger timing error. If no fault LEDs are illuminated, continue with this procedure. | |
| 10. | Synchronize the oscilloscope using channel 1 as the trigger. | |
| 11. | Attach the channel 1 oscilloscope probe to Transmitter Control Adapter UD3A3A4TP13. | |
| 12. | Attach the channel 2 oscilloscope probe to Transmitter Control Adapter UD3A3A4TP20. | |
| 13. | Set the Vertical Volts/Div. control on the oscilloscope to two volts per division. | |
| 14. | Set the Horizontal Sec./Div. control to 500 microseconds/division. | |
| 15. | Observe the two negative going triggers. A 5 Vdc signal with a negative pulse approximately 1 microsecond wide should be observed for both channel 1 and channel 2. | |
| 16. | Use the delay sweep function on the oscilloscope to magnify both triggers simultaneously. | |
| 17. | Measure the difference in time between the two triggers. The difference in time should be 740 microseconds. | |

Notes for Figure 6-2 (RDA Fault Isolation Flowchart) (continued)

| Step | Operator Action | System Response/Comments |
|---|---|---|
| (32) | CHECK SYNCHRONIZER TRIGGERS AND FAULT LEDS | |
| 18. | If the difference in time is 740 microseconds, continue this procedure. If the difference in time is not 740 microseconds, or if one of the triggers is missing, the triggers are erroneous. | |
| 19. | Move channel 2 oscilloscope probe to UD3A3A4TP22. | |
| 20. | Set the Horizontal Sec./Div. control to 500 microseconds/division. | |
| 21. | Observe the two negative going triggers. A 5 Vdc signal with a negative pulse approximately 1 microsecond wide should be observed for both channel 1 and channel 2. | |
| 22. | Use the delay sweep function on the oscilloscope to magnify both triggers simultaneously. | |
| 23. | Measure the difference in time between the two triggers. The difference in time should be between one and five microseconds. | |
| 24. | If the difference in time is between one and five microseconds, continue this procedure. If the difference in time is not between one and five microseconds, or if one of the triggers is missing, the triggers are erroneous. | |
| 25. | Move channel 2 oscilloscope probe to UD3A3A4TP15. | |
| 26. | Set the Horizontal Sec./Div. control to 1 millisecond/division. | |
| 27. | Observe the three negative going triggers. A 5 Vdc signal with two negative pulses approximately 1 microsecond wide should be observed on channel 1, RF Pulse Start; one negative pulse approximately one microsecond wide should be observed on channel 2, Filament Reset. | |
| 28. | Use the delay sweep function on the oscilloscope to magnify the two RF Pulse Start triggers and the Filament Reset trigger between them. | |
| 29. | Measure the difference in time between the first RF Pulse Start trigger on channel 1 and the Filament Reset trigger on channel 2. Then measure the time between the Filament Reset trigger and the second RF Pulse Start trigger. The differences in time should be the same. | |
| 30. | If the two differences in time are the same, continue this procedure. If the two differences in time are not the same, or if one of the triggers is missing, the triggers are erroneous. | |
| 31. | Move channel 2 oscilloscope probe to UD3A3A4TP11. | |
| 32. | Set the Horizontal Sec./Div. control to 500 microseconds/division. | |
| 33. | Observe the two negative going triggers. A 5 Vdc signal with a negative pulse approximately 1 microsecond wide should be observed for both channel 1 and channel 2. | |

Notes for Figure 6-2 (RDA Fault Isolation Flowchart) (continued)

| Step | Operator Action | System Response/Comments |
|---|---|---|
| (32) | CHECK SYNCHRONIZER TRIGGERS AND FAULT LEDS | |
| 34. | Use the delay sweep function on the oscilloscope to magnify both triggers simultaneously. | |
| 35. | Measure the difference in time between the two triggers. The difference in time should be 34.7 microseconds. | |
| 36. | If the difference in time is 34.7 microseconds, continue this procedure. If the difference in time is not 34.7 microseconds, or if one of the triggers is missing, the triggers are erroneous. | |
| 37. | Move channel 2 oscilloscope probe to UD3A3A4TP26. | |
| 38. | Set the Horizontal Sec./Div. control to 500 microseconds/division. | |
| 39. | Observe the two negative going triggers. A 5 Vdc signal with a negative pulse approximately 1 microsecond wide should be observed for both channel 1 and channel 2. | |
| 40. | Use the delay sweep function on the oscilloscope to magnify both triggers simultaneously. | |
| 41. | Measure the difference in time between the two triggers. The difference in time should be 105 microseconds. | |
| 42. | If the difference in time is 105 microseconds, continue this procedure. If the difference in time is not 105 microseconds, or if one of the triggers is missing, the triggers are erroneous. | |
| 43. | Move channel 2 oscilloscope probe to UD3A3A4TP21. | |
| 44. | Set the Horizontal Sec./Div. control to 500 microseconds/division. | |
| 45. | Observe the two negative going triggers. A 5 Vdc signal with a negative pulse approximately 1 microsecond wide should be observed for both channel 1 and channel 2. | |
| 46. | Use the delay sweep function on the oscilloscope to magnify both triggers simultaneously. | |
| 47. | Measure the difference in time between the two triggers. The difference in time should be 740 microseconds. | |
| 48. | If the difference in time is 740 microseconds, continue this procedure. If the difference in time is not 740 microseconds, or if one of the triggers is missing, the triggers are erroneous. | |
| 49. | At the RDA System Console, make entry to quit with synchronizer off. | |
| 50. | Close inner front left transmitter cabinet door. | |

Notes for Figure 6-2 (RDA Fault Isolation Flowchart) (continued)

| Step | Operator Action | System Response/Comments |
|---|---|---|
| (32) | CHECK SYNCHRONIZER TRIGGERS AND FAULT LEDS | |
| 51. | Push MAINT/SYSTEM switch to put the transmitter in System mode. | |
| 52. | Perform necessary key strokes to return to the HSP Diagnostics section of RDASOT. | |
| (33) | OBSERVE THE ELEVATION POSITION | |

**NOTE**

This procedure applies to non-redundant systems and control channel of redundant systems.

| Step | Operator Action | System Response/Comments |
|---|---|---|
| 1. | At the RDA Applications Terminal: | |
| | a. On the command and parameter lines, enter **TERP<Tab>*password*<Return>**. | Puts the transmitter in standby mode, places the antenna in park, and terminates the application program. |
| | b. Press the **<Shift>** and **<Port>** keys **simultaneously**. | Switches to RDA System Console. |
| 2. | At the RDA System Console, enter:<br>**RDASOT<Return>**<br>**4<Return>**<br>**1<Return>**<br>**1<Return>** | <br>Brings up RDASOT. Displays Main Menu.<br>To select Manual Control and Display Menu.<br>To select Control Pedestal.<br>To Display position. |
| 3. | Note the current position. | |
| 4. | a. At completion of test, enter **Ø<Return>**. | To select Return to MCD Menu. |
| | b. If terminating RDASOT is desired, enter:<br>**Ø<Return>**<br>**Ø<Return>** | <br>To return to Main Menu.<br>To terminate RDASOT. This is indicated by:<br>`RDASOTXX:END OF TASK 0` |

Notes for Figure 6-2 (RDA Fault Isolation Flowchart) (continued)

(34) PERFORM GUARD (+) LOG TEST

| Step | Operator Action | System Response/Comments |
|---|---|---|
| 1. | a. At the RDA System Console enter: | |
| | **RDASOT<Return>** | Brings up RDASOT. Displays Main Menu. |
| | **4<Return>** | To select Manual Control and Display Menu. |
| | **2<Return>** | To select Control RCVR/Signal Proc |
| | **5<Return>** | To select CW Source |
| | **3<Return>** | To select RCVR Interface Output Select (RIOS) |
| | **8<Return>** | To select RF/IF Test Monitor Output. |
| | **2<Return>** | To select Detected RF. |
| | **1<Return>** | To select Page 2 of IF Selection Menu |
| | **9<Return>** | To select Guardband (+) Log Det Input Test Jack. |
| | **8<Return>** | To select Test A/D Bandwidth. |
| | **1<Return>** | To select Wide Band. |
| | **4<Return>** | To select Test Attenuation. |
| | **Ø<Return>** | For Ø dB Attenuation. |
| | **1<Return>** | To select Inject Signal. |
| | b. A menu appears. Note the signal level; it should be -88 ± 5 dBm. | |

(35) PERFORM GUARD (-) LOG TEST

| Step | Operator Action | System Response/Comments |
|---|---|---|

NOTE

The following steps assume the previous test, Perform Guard (+) Log Test has been completed. If not, perform (34), then continue with steps below.

| | | |
|---|---|---|
| 1. | a. At the RDA System Console enter: | |
| | **<Return>** | To continue.<br>CW Source Control Menu is displayed. |
| | **3<Return>** | To select Receiver Interface Output Select (RIOS). |
| | **8<Return>** | To select RF/IF Test Monitor Output. |
| | **2<Return>** | To select Detected IF. |
| | **1<Return>** | To select Page 2 of IF Selection Menu. |
| | **11<Return>** | To select Guardband (-) Log Det Input Test Jack. |
| | **1<Return>** | To inject signal. |
| | b. A menu appears. Note the signal level; it should be -88 ± 5 dBm. | |

Notes for Figure 6-2 (RDA Fault Isolation Flowchart) (continued)

(36) CHECK OTHER PULSEWIDTH

| Step | Operator Action | System Response/Comments |
|---|---|---|
| 1. | At the RDA Applications Terminal: | |
| | a. On the command and parameter lines, enter **TERP<Tab>*password*** **<Return>**. | Puts the transmitter in standby mode, places the antenna in park, and terminates the application program. |
| | b. Press the **<Shift>** and **<Port>** keys **simultaneously**. | Switches to RDA System Console. |
| 2. | a. At the RDA System Console enter: | |

| Control | Non-Control | |
|---|---|---|
| **RDASOT** | **RDASOT** | |
| **<Return>** | **<Return>** | RDASOT Main Menu appears. |
| **4<Return>** | **4<Return>** | For Manual Control and Display Menu. |
| **2<Return>** | **2<Return>** | To select Control RCVR/Signal Proc. |
| **2<Return>** | **4<Return>** | To select Radar Source/Klystron Output Source. |
| **4<Return>** | **9<Return>** | To select Pulsewidth/PRF. |
| **2<Return>** | **2<Return>** | For long pulse. |
| **1<Return>** | **1<Return>** | For PRF 1. |
| **2<Return>** | - | To toggle to Dummy load. |
| **1<Return>** | **1<Return>** | To inject signal. |
| **<Return>** | **<Return>** | To return to Radar Source Control Menu. |

| | |
|---|---|
| b. At completion of test, enter: | |
| **Ø<Return>** | TESTSIG Source Selection Menu appears. |
| **Ø<Return>** | To select Return to Manual Control Menu. Prompt appears - `DO YOU WISH TO EXIT WITH SYNCHRONIZER RUNNING? ENTER "Y" TO KEEP PSP RUNNING.` |
| **Y<Return>** | Manual Control and Display Menu appears. |
| **Ø<Return>** | Main Menu appears. |
| **Ø<Return>** | To terminate RDASOT. |

(37) PERFORM PHASE DETECTOR TEST

| Step | Operator Action | System Response/Comments |
|---|---|---|
| 1. | At the RDA Applications Terminal: | |
| | a. On the command and parameter lines, enter **TERP<Tab>*password*** **<Return>**. | Puts the transmitter in standby mode, places the antenna in park, and terminates the application program. |

Notes for Figure 6-2 (RDA Fault Isolation Flowchart) (continued)

(37) PERFORM PHASE DETECTOR TEST

| Step | Operator Action | System Response/Comments |
|---|---|---|
| | b. Press the **<Shift>** and **<Port>** keys **simultaneously**. | Switches to RDA System Console. |
| 2. | At the RDA System Console enter: | |
| | **RDASOT<Return>** | Brings up RDASOT. Displays Main Menu. |
| | **4<Return>** | To select Manual Control and Display Menu. |
| | **2<Return>** | To select Control RCVR/Sig Proc. |
| | **6<Return>** | To select RF Noise Source. |
| | **2<Return>** | To toggle to Front End. |
| | **4<Return>** | To set attenuation. |
| | **Ø<Return>** | For 0 dB attenuation. |
| | **3<Return>** | To select RCVR Interface Output Select (RIOS). |
| | **8<Return>** | To select RF/IF Test Monitor Output. |
| | **2<Return>** | To select Detected IF. |
| | **7<Return>** | For Amplifier/Limiter Output Test Jack A9J4. |
| 3. | On the rear door of the receiver cabinet, locate the AGC Controller UD4A13. Put BNC grounding cap on UD4A13J12. | |
| 4. | At the RDA System Console enter: | |
| | **1<Return>** | To select Inject Signal. |
| 5. | A chart should appear on the screen. Locate the value for signal level; it should be -42 ± 3 dB. | If the signal level value is not -42 ± 3 dB, see Figure 6-2, sheet 23. |
| 6. | On the side of the receiver cabinet, locate the I video (UD4J9) and Q video (UD4J10) BNC jacks. Use calibrated true RMS multimeter to measure the AC voltage on each jack from center conductor to shield. The reading should be 37 ± 5 mVac. | |
| 7. | At the RDA System Console enter: | |
| | **<Return>** | To continue. |
| | **4<Return>** | To set attenuation. |
| | **6<Return>** | For 6 dB of attenuation. |
| | **1<Return>** | To inject signal. |
| 8. | Repeat step 6; this time the AC voltage should read 17 ± 5 mVac. | |

Notes for Figure 6-2 (RDA Fault Isolation Flowchart) (continued)

(37) PERFORM PHASE DETECTOR TEST

| Step | Operator Action | System Response/Comments |
|---|---|---|
| 9. | Remove BNC grounding cap from UD4A13J12. | |

(38) RUN PEDESTAL SUBTEST 4

**NOTE**

This procedure applies to non-redundant systems and control channel of redundant systems.

| Step | Operator Action | System Response/Comments |
|---|---|---|
| 1. | At the RDA Applications Terminal: | |
| | a. On the command and parameter lines, enter **TERP<Tab>*password*<Return>**. | Puts the transmitter in standby mode, places the antenna in park, and terminates the application program. |
| | b. Press the **<Shift>** and **<Port>** keys **simultaneously**. | Switches to RDA System Console. |
| 2. | | |
| | a. At the RDA System Console:<br>**RDASOT<Return>**<br>**2<Return>**<br>**3<Return>**<br>**4<Return>**<br>**5<Return>**<br>**4<Return>**<br><br>**Ø<Return>**<br>**1<Return>** | <br>Brings up RDASOT. Displays Main Menu.<br>To display Diagnostic Menu.<br>To select Pedestal Diagnostics<br>To Deselect All Subtests.<br>To Select Individual Subtests.<br>To select Subtest 4 - SELFTEST 2.<br>Note `SELECTED` is displayed for Subtest 4.<br>To select Selection Complete.<br>To select Begin Subtest Execution. |
| | b. At completion of test, enter **Ø<Return>** | Displays Diagnostic Menu. |
| | c. If terminating RDASOT is desired, enter:<br>**Ø<Return>**<br>**Ø<Return>** | <br>To return to Main Menu.<br>To terminate RDASOT. This is indicated by:<br>`RDASOTXX:END OF TASK 0` |

Notes for Figure 6-2 (RDA Fault Isolation Flowchart) (continued)

(39) RUN TRANSMITTER WITH TESTSIG

| Step | Operator Action | System Response/Comments |
|---|---|---|
| 1. | At the RDA Applications Terminal: | |
| | a. On the command and parameter lines, enter **TERP<Tab>*password*<Return>**. | Puts the transmitter in standby mode, places the antenna in park, and terminates the application program. |
| | b. Press the **<Shift>** and **<Port>** keys **simultaneously**. | Switches to RDA System Console. |
| 2. | At the RDA System Console enter: | |

| | Control | Non-Control | |
|---|---|---|---|
| a. | **RDASOT** | **RDASOT** | |
| | **<Return>** | **<Return>** | Brings up RDASOT. Displays Main Menu. |
| | **4<Return>** | **4<Return>** | For Manual Control and Display Menu. |
| | **2<Return>** | **2<Return>** | To select Control RCVR/Signal Proc. |
| | **2<Return>** | **4<Return>** | To select Radar Source/Klystron Output Source. |
| b. | **4<Return>** | **9<Return>** | To select Pulsewidth/PRF. |
| | **1<Return>** | **1<Return>** | To select Short Pulse. |
| | **1<Return>** | **1<Return>** | For select PRF1. |
| | **1<Return>** | **1<Return>** | To inject signal. |
| | **N<Return>** | **N<Return>** | Not to override. |
| | **<Return>** | **<Return>** | To continue. |

c. Observe faults on Transmitter Fault Monitor UD3A1. If no faults occur, repeat step b with the next higher PRF until a fault occurs or the highest PRF is reached.

d. At completion of test, enter **Ø<Return>** until RDASOT is terminated.

(40) CHECK ADAPTATION DATA

| Step | Operator Action | System Response/Comments |
|---|---|---|
| 1. | At the RDA Applications Terminal: | |
| | a. On the command and parameter lines, enter: | |
| | b. **ICRA<Tab>*password*<Return>**. | |

Notes for Figure 6-2 (RDA Fault Isolation Flowchart) (continued)

(40) CHECK ADAPTATION DATA

| Step | Operator Action | System Response/Comments |
|---|---|---|
| 2. | At the command line enter:<br>**SF <Return>**<br>**C <Return>**<br>**S <Return>** | <br>For Select File and Inspect Change.<br>For current.<br>For SPS. |
| 3. | Use the **<F>** and **<B>** keys to find parameters 140 through 165.<br>a. Ensure that all OprSEL code parameter (141, 145, 149, 154, 158, and 162) values are Ø, 1, or 2.<br>b. Ensure that all Data SUPPR levels (143, 144, 147, 148, 151, 152, 156, 157, 160, 161, 164, and 165) are 1, 2, or 3.<br>c. Ensure that all STOP Ranges (142, 146, 150, 155, 159, and 163) are whole numbers and monotonically increasing within each segment. | |
| 4. | If any of the above criteria has not met, the adaptation data must be corrected. | |

Notes for Figure 6-2 (RDA Fault Isolation Flowchart) (continued)

| Step | Operator Action | System Response/Comments |
|---|---|---|

(41) VELOCITY/SPECTRUM WIDTH TEST SIGNAL CHECK

The velocity and spectrum width check is performed as described in paragraph 5-4.9.3. (Once per volume scan in operate or once per minute in standby). The purpose of this check is to determine whether the test signal conditions have been properly generated. The technique involves placing the RDA in standby and carefully viewing the I&Q outputs of the Phase Detector in a manner similar to setting the AGC Controller threshold described in paragraph 6-6.24. The presence of the modified circle as described below indicates the presence of a test signal with a simulated Doppler frequency as described in paragraph 5-4.9.3.

1. Connect the oscilloscope to I and Q video with the scope in the X-Y mode as described in 6-6.24.4.3.
2. Place the RDA software in the standby mode by entering **STBY<Return>** on the RDA applications terminal command line.
3. Look for a modified circle presentation which lasts for about one second in a one minute observation. The circle is modified to the extent that the circle is segmented similar to a starburst. The starburst amplitude corresponds to approximately 2 volts. If the above described event occurs, the proper test signal is being produced.

(42) RUN BTC-501/504 TEST

| Step | Operator Action | System Response/Comments |
|---|---|---|
| 1. | At RDA Applications Terminal, if Main Menu is not displayed, enter **MAIN<Return>** at command entry line. With Main Menu displayed, enter **RELC <Return>**. | |
| 2. | Enter **TERP<Tab>** ***password*** **<Return>**. | |
| 3. | Press **<Shift>** and **<Port>** keys **simultaneously**. | Shifts to RDA System Console screen. |
| 4. | Enter **ERR LOG,OFF <Return>**. | |
| 5. | Enter **D TA <Return>**. | Observe if any tasks are active. |
| 6. | If any tasks are active, cancel them by entering the following: **CA** ***taskid*** **<Return>**. | |

Notes for Figure 6-2 (RDA Fault Isolation Flowchart) (continued)

(42) RUN BTC-501/504 TEST

| Step | Operator Action | System Response/Comments |
|---|---|---|
| 7. | Enter **MA DSCØ:,OFF <Return>**. | |
| 8. | Enter **D D <Return>**. | Verify that disk is off. |
| 9. | **Simultaneously** press **<Ctrl>** and **<V>** keys twice and press **<Return>**. Enter **KEY 1, *password*** and then **<Return>**. | `CDS>` prompt is displayed. |
| 10. | Enter **HA <Return>**. | |
| 11. | Insert M3200 diagnostic tape into SCSI tape drive and secure. | |
| 12. | Enter **INIT <Return>**. | |
| 13. | Press **<Break>** key after `Basic Confidence Test Complete` appears on the screen and before the countdown ends. | |
| 14. | At the `Entry =` prompt, enter **1**. | |
| 15. | At the `Update CDS configuration table?` message, enter **N <Return>**. | |
| 16. | At the `Filemarks =` prompt, enter **Ø** | "`-`" prompt appears. |
| 17. | At "`-`" prompt, enter **D**.<br>Note the sequence numbers (in the first column on the left) for the HIGH LOADER/EXECUTIVE program (06-145) and the BTC-501/504 diagnostic (91-424). | A listing of the diagnostic programs appears. |
| 18. | Enter **LO *[sequence number for High Loader/Executive program]* ST <Return>**. | |
| 19. | Enter **LO *[sequence number for BTC-501/504 test diagnostic]*; ST <Return>**. | "*" prompt appears on screen. |
| 20. | Enter **BTC 504 1 <Return>**. | |
| 21. | Enter **PIC2AD 1 <Return>**. | |

Notes for Figure 6-2 (RDA Fault Isolation Flowchart) (continued)

(42) RUN BTC-501/504 TEST

| Step | Operator Action | System Response/Comments |
|---|---|---|
| 22. | Enter **RUN <Return>**. | All tests should pass displaying no error. In addition, test 3 will display "`the value at address 2 is 1`". Test 2 will display "`A one minute waiting period occurs before results are printed.`" |
| 23. | Reset BGL clock | Tests should pass. |
| 24. | **Simultaneously** press **<Ctrl>** and **<V>** keys twice and press **<Return>**. Enter **KEY 1, *password*** and then **<Return>**. | |
| 25. | Enter **INIT <Return>**. | |
| 26. | After Main Menu is displayed, press **<Shift>** and **<Port>** keys **simultaneously**. | Shifts to RDA Applications Terminal. |
| 27. | Enter **TERP<Tab> *password* <Return>**. | |
| 28. | Press **<Shift>** and **<Port>** keys **simultaneously**. | Shifts to RDA System Console screen. |
| 29. | Enter **CA TIME <Return>**. | `TIME: END OF TASK 255` displayed. |
| 30. | Enter **BGLSETU <Return>**. | `SETIME: TYPE DATE AND/OR TIME` is displayed. |
| 31. | Enter **MM/DD/YYYY,hh:mm:ss <Return>**, using the current date and time. | `SETIME: END OF TASK 0` is displayed. |
| 32. | Enter **BGLSTART <Return>**. | |
| 33. | **Simultaneously** press **<Ctrl>** and **<V>** keys twice and press **<Return>**. | `CDS>` prompt is displayed. |
| 34. | Enter **INIT <Return>**. | |

(43) STATISTICAL MULTIPLEXER (STATMUX) TRUNK STATUS CHECK

| Step | Operator Action | System Response/Comments |
|---|---|---|
| 1. | Remove cable at UD32A3 Port 1 and connect cable to Port 10. | |

Notes for Figure 6-2 (RDA Fault Isolation Flowchart) (continued)

(43) STATISTICAL MULTIPLEXER (STATMUX) TRUNK STATUS CHECK

| Step | Operator Action | System Response/Comments |
|---|---|---|
| 2. | At the System Console, press **<Return>** five times. | `ucpside` prompt should appear |
| 3. | If any other or no prompt appears, the STATMUX might be configured improperly. Proceed to Section 6-6.34 for STATMUX setup procedure. If no prompt appears when following setup procedure, replace STATMUX UD32A3. | |
| 4. | At the System Console enter:<br>**status <Return>**<br>**4 <Return>**<br>***1*** for Async or ***2*** for Sync **<Return>**<br>**2 <Return>**<br>***[port number]*** **<Return>**<br>**1 <Return>**<br>**4 <Return>** | <br><br><br><br><br><br><br>To choose T1<br>To choose Modem Control Signals display. |
| 5. | All signals (RTS, DTR, CTS, DSR, and DCD) should be HIGH. If all signals are not HIGH replace STATMUX UD32A3, otherwise replace STATMUX UD105A20. | `HIGH` should appear on screen. |

(44) LAL PATTERN TEST

| Step | Operator Action | System Response/Comments |
|---|---|---|
| 1. | Press (DOWN) | Display reads “TEST OPTs” |
| 2. | Press (ACROSS) | Display reads “TEST = END TEST” |
| 3. | Press (DOWN) | Continue pressing until display reads “Test: LAL Port” |
| 4. | Press (ENTER) | Display reads “Test: LAL Port” |
| 5. | Press (RETURN) twice | Display reads “LAL 9600 T/D?”, any other display indicates a failure. |
| 6. | Wait 5 minutes, then continue | |
| 7. | Press (DOWN) | Display reads “TEST OPTs” |

Notes for Figure 6-2 (RDA Fault Isolation Flowchart) (continued)

(44) LAL PATTERN TEST

| Step | Operator Action | System Response/Comments |
|---|---|---|
| 8. | Press (ACROSS) | Display reads “Test: LAL Port” |
| 9. | Press (DOWN) | Continue pressing until display reads “Test: End Test” |
| 10. | Press (ENTER) | Display reads “Bit = x BLK = x”, where x = 0; any other number for x indicates a failure. |

(45) RDL PATTERN TEST

| Step | Operator Action | System Response/Comments |
|---|---|---|
| 1. | If display does not read “DATA 9600 T/D?” perform steps 2 and 3, otherwise proceed with step 4. | Display reads “TEST OPTs” |
| 2. | Press (ACROSS) | Continue pressing until display reads “Dial From # = 1” |
| 3. | Press (ENTER) | Display should read “Data 9600 T/D?” If Display does not read this, then RDL Pattern Test has failed. |
| 4. | Press (DOWN) | Continue pressing until display reads “FP SECURITY”. |
| 5. | Press (ACROSS) | Continue pressing until display reads “Enter Password”. |
| 6. | Press (ENTER) | Display reads “Enter PW:0000”. |
| 7. | Press (ACROSS) and (DOWN) | To enter password. |
| 8. | Press (ENTER) | Display reads “Password.Unlocked”. |
| 9. | Press (RETURN) | Continue pressing until display reads “Data 9600 T/D?” |
| 10. | Press (DOWN) | Display reads “TEST OPTs”. |
| 11. | Press (ACROSS) | Display reads “Test = End Test”. |
| 12. | Press (DOWN) | Display reads “Test: RDL Port”. |
| 13. | Press (ENTER) | Display reads “Test = RDL Port”. |
| 14. | Press (RETURN) twice | Display should read “Test 9600 T/D?”. Any other display indicates a failure. |

Notes for Figure 6-2 (RDA Fault Isolation Flowchart) (continued)

(45) RDL PATTERN TEST

| Step | Operator Action | System Response/Comments |
|---|---|---|
| 15. | Wait 5 minutes, then continue | |
| 16. | Press (DOWN) | Display reads “TEST OPTs”. |
| 17. | Press (ACROSS) | Display reads “Test: RDL Port”. |
| 18. | Press (DOWN) | Continue pressing until display reads “Test: End Test”. |
| 19. | Press (ENTER) | Display reads “Bit = x BLK = x”, where x = 0; any other number for x indicates a failure. |

(46) STATMUX PORT STATUS CHECK

| Step | Operator Action | System Response/Comments |
|---|---|---|
| 1. | Remove cable at UD32A3 (port # and usage can be found in the table below) and connect it to UD26 Port 10. | |

| Port Name | Port Number | Indication of Usage |
|---|---|---|
| Channel 1 System Console port none (RMSC1) | 1 | Application Console not working (Channel 1) or printer not working (Channel 1 or 20 |
| Channel 1 Application Console port none (RMAC1) | 2 | System Console not working (Channel 1) |
| Channel 2 System Console port none (RMSC2) | 3 | Application Console not working (Channel 2) |
| Channel 2 Application Console port none (RMAC2) | 4 | System Console not working (Channel 2) |

| | | |
|---|---|---|
| 2. | If using an applications console port, perform steps a through d to enter the CDT-100 configuration menu, otherwise proceed to step 3. The commands are entered at the corresponding console listed in the table in step 1. | |
| | a. Press **<Shift>** and **<Port>** keys | Configuration Menu appears |

Notes for Figure 6-2 (RDA Fault Isolation Flowchart) (continued)

(46) STATMUX PORT STATUS CHECK

| Step | Operator Action | System Response/Comments |
|---|---|---|
| | b. Press **<Tab>** key to block field and change Y to N if necessary, by pressing the **<Spacebar>** | |
| | c. Press **<Shift>** and **<Port>** keys | To exit Configuration Menu |
| | d. Press **Y** | Save changes to menu |
| 3. | Press **<Return>** | Continue pressing until `remside` appears. |
| 4. | If any other or no prompt appears, the STATMUX might be configured improperly. Proceed to NWS EHB 6-525 paragraph 6-6.2 for STATMUX setup procedures. If no prompt appears when following setup procedure, replace STATMUX UD32A3. | |
| 5. | At the System Console, enter:<br>**status <Return>**<br>**4 <Return>**<br>**1 <Return>**<br>***[port number]*** (from table in step 1)<br>**<Return>**<br>**4 <Return>** | |
| 6. | All signals (RTS, DTR, CTS, DSR, and DCD) should be HIGH. If DTR, CTS, or DCD are not HIGH, replace STATMUX UD32A3. If RTS and DTR are not HIGH, check cabling to CDT-100 UD32A1. If all signals are HIGH, continue with step 7. | `HIGH` should appear on screen. |

Notes for Figure 6-2 (RDA Fault Isolation Flowchart) (continued)

(46) STATMUX PORT STATUS CHECK

| Step | Operator Action | System Response/Comments |
|---|---|---|
| 7. | At the System Console enter:<br>**<Return>**<br>**1 <Return>**<br>**1 <Return>**<br>**rdaside <Return>**<br>**status <Return>**<br>**4 <Return>**<br>**1 <Return>**<br>***[port number]*** (from table in step 1)<br>**<Return>**<br>**4 <Return>** | `remside` prompt appears |
| 8. | All signals (RTS, DTR, CTS, DSR, and DCD) should be HIGH. If DTR, RTS and DCD are not HIGH, replace Channel 1 STATMUX UD105A20. If RTS and DTR are not HIGH, replace 8-Line Comm Mux Board UD105A12A19. | |

Figure 6-1, Sheets 1 through 8, on pages FP-6-111 through FP-6-125/(FP-6-126 blank) have been deleted. Figure 6-1A, Sheets 1 through 8, on pages FP-6-127 through FP-6-141/(FP-6-142 blank), have been renumbered to Figure 6-1, Sheets 1 through 8.

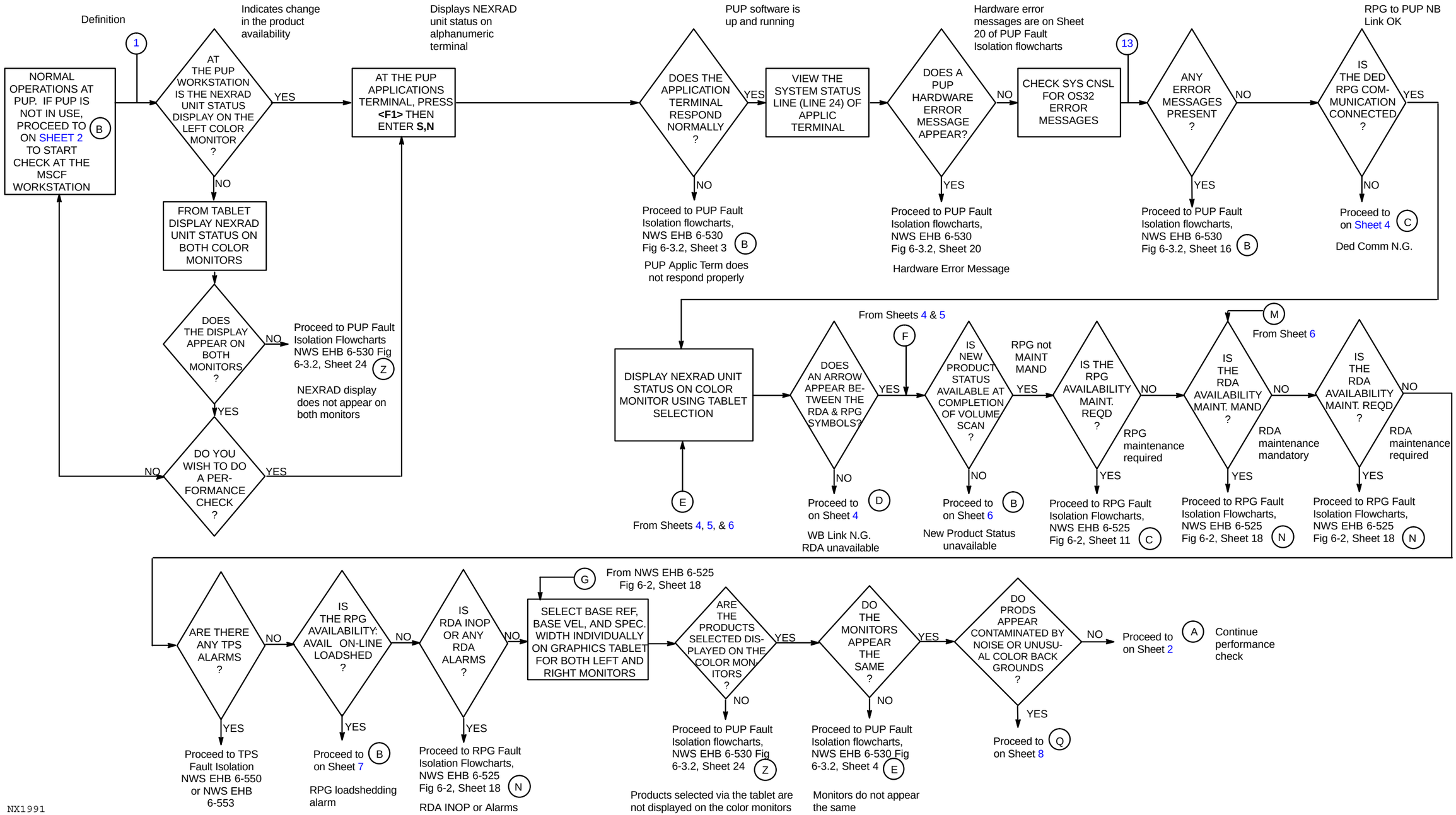


Figure 6-1. System Fault Isolation Flowchart (Operability Check) (Sheet 1 of 8)

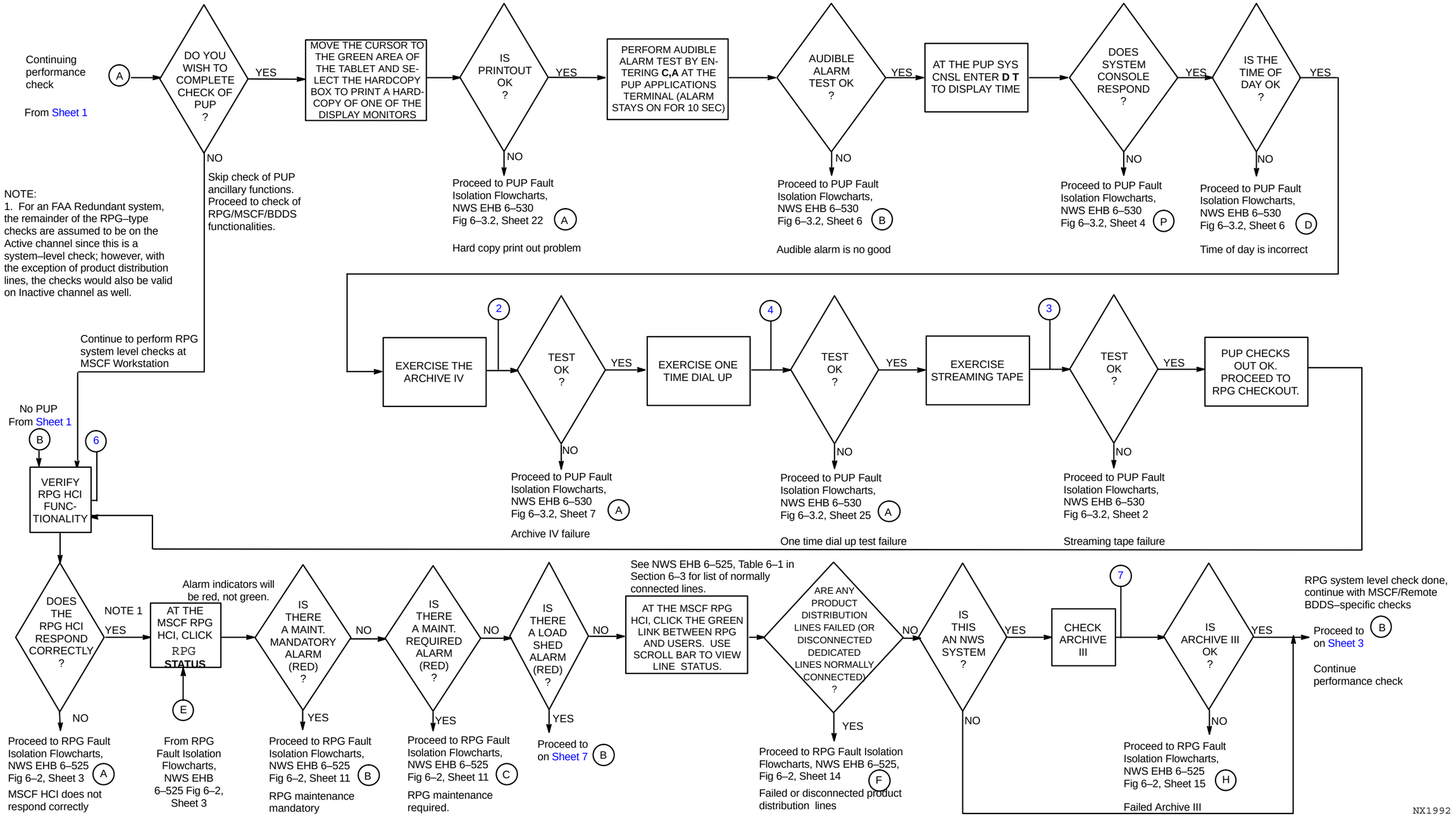


Figure 6–1. System Fault Isolation Flowchart (Operability Check) (Sheet 2 of 8)

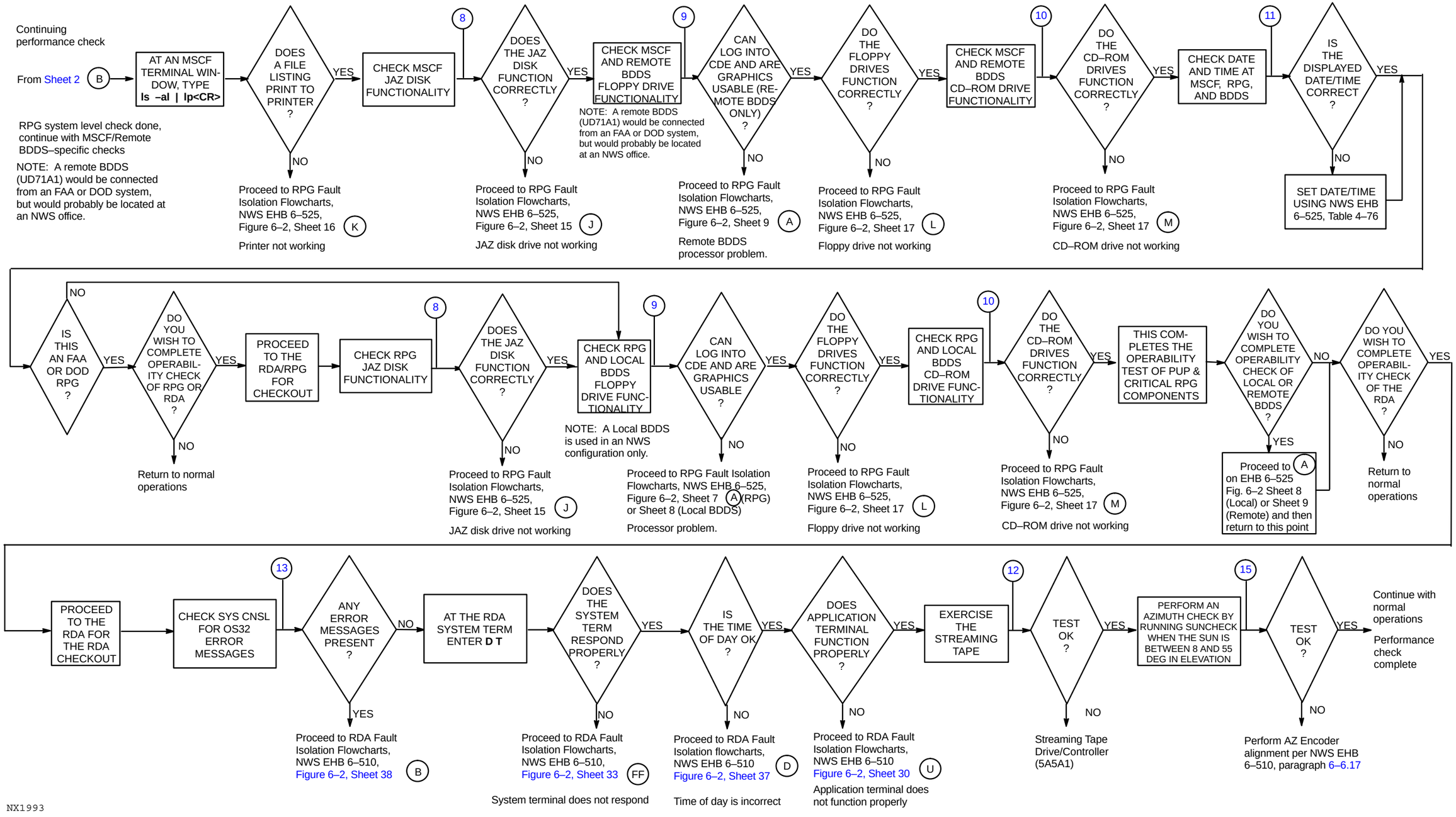


Figure 6–1. System Fault Isolation Flowchart (Operability Check) (Sheet 3 of 8)

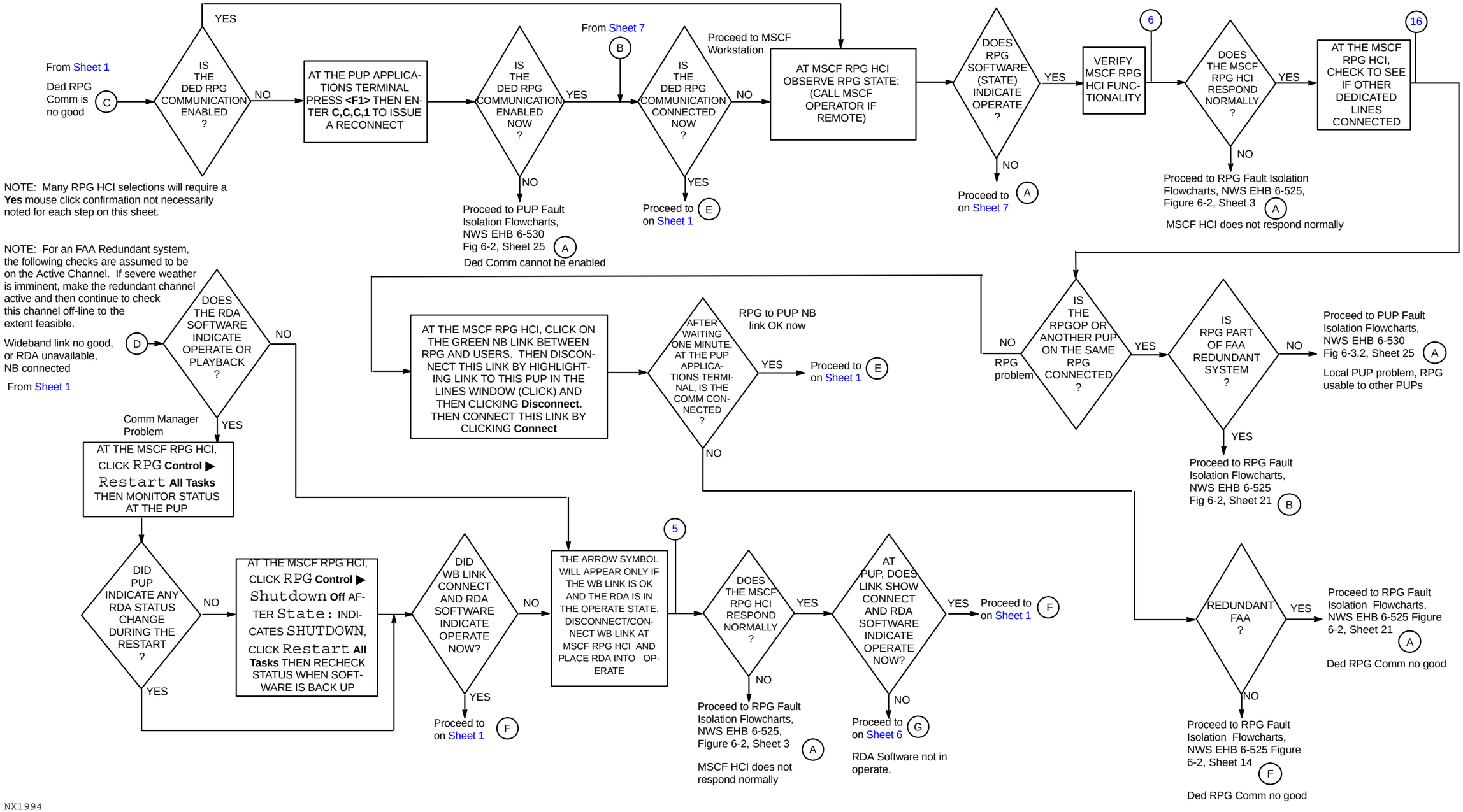


Figure 6-1. System Fault Isolation Flowchart (Communications) (Sheet 4 of 8)

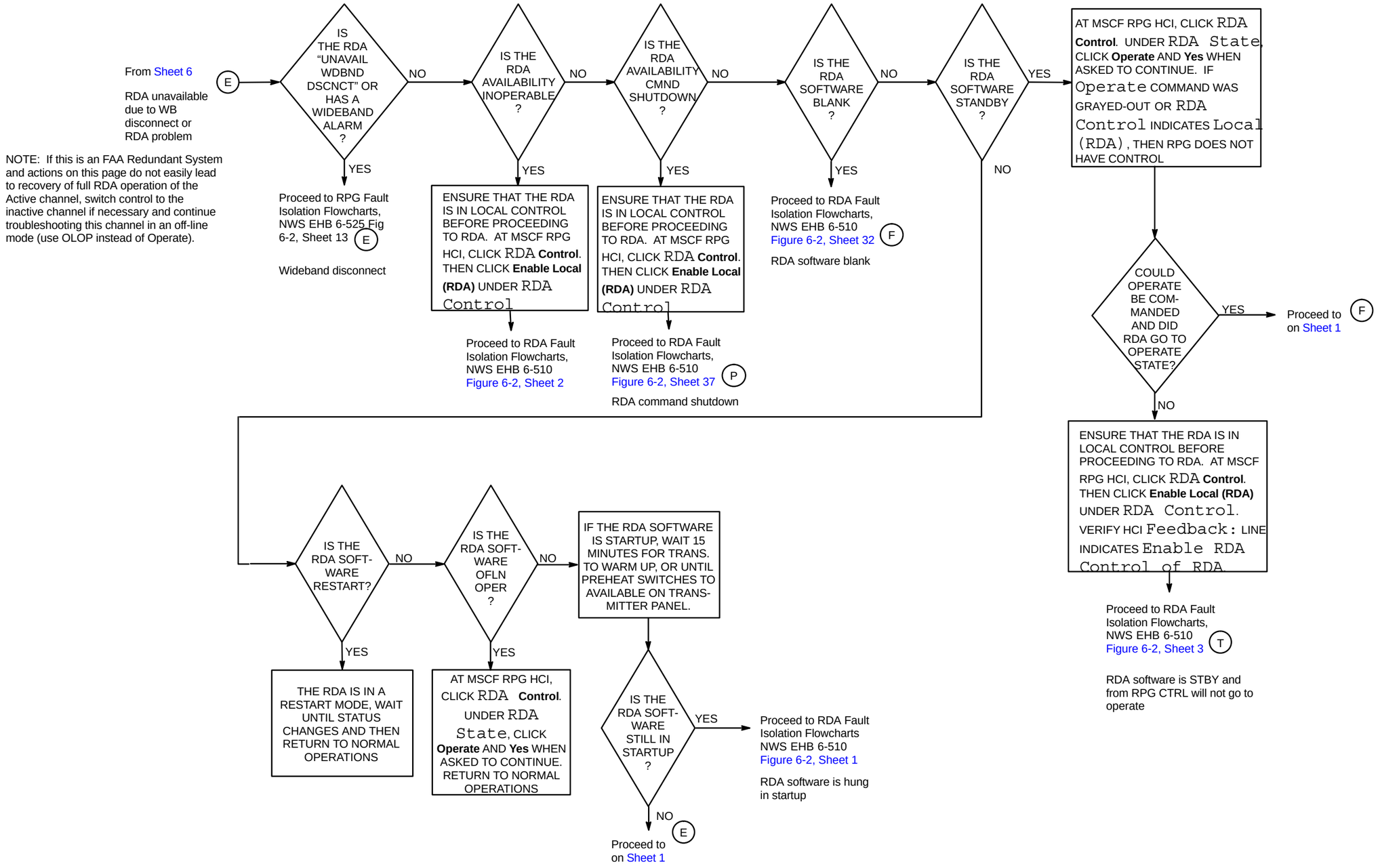


Figure 6-1. System Fault Isolation Flowchart (Status RDA) (Sheet 5 of 8)

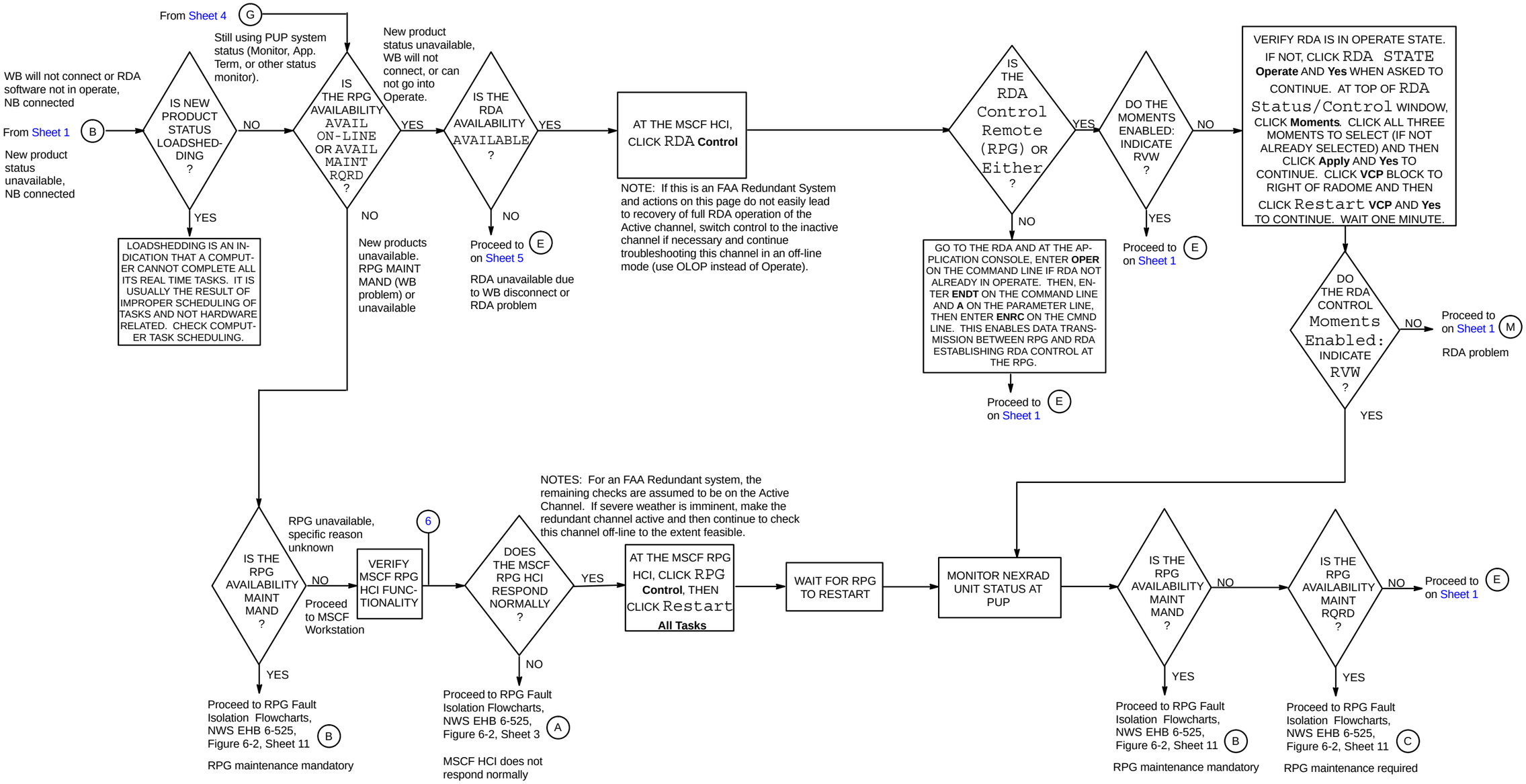


NX1996

Figure 6-1. System Fault Isolation Flowchart (RPG Check) (Sheet 6 of 8)

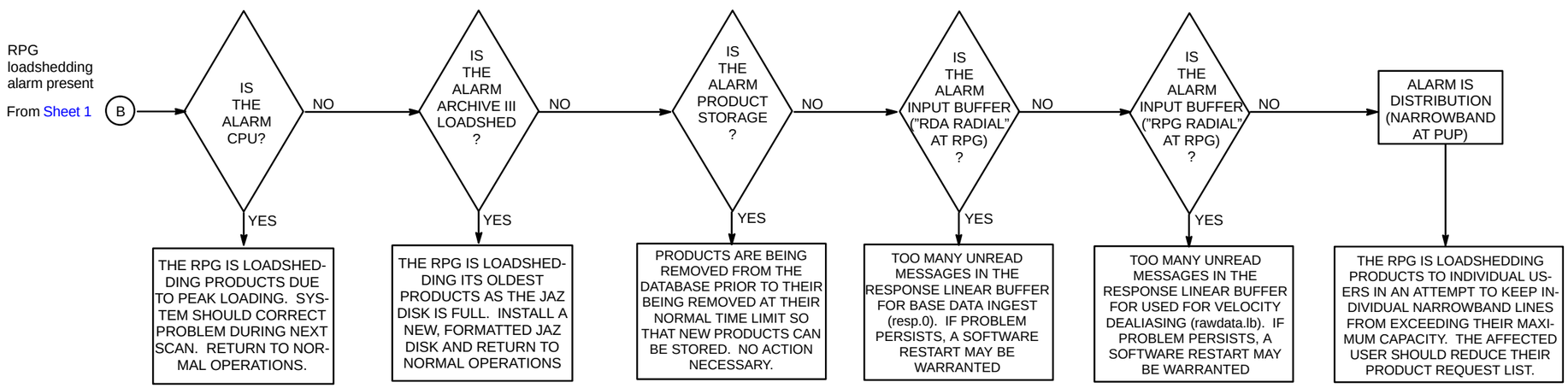


NX1997

Figure 6-1. System Fault Isolation Flowchart (RPG Software, Alarms) (Sheet 7 of 8)

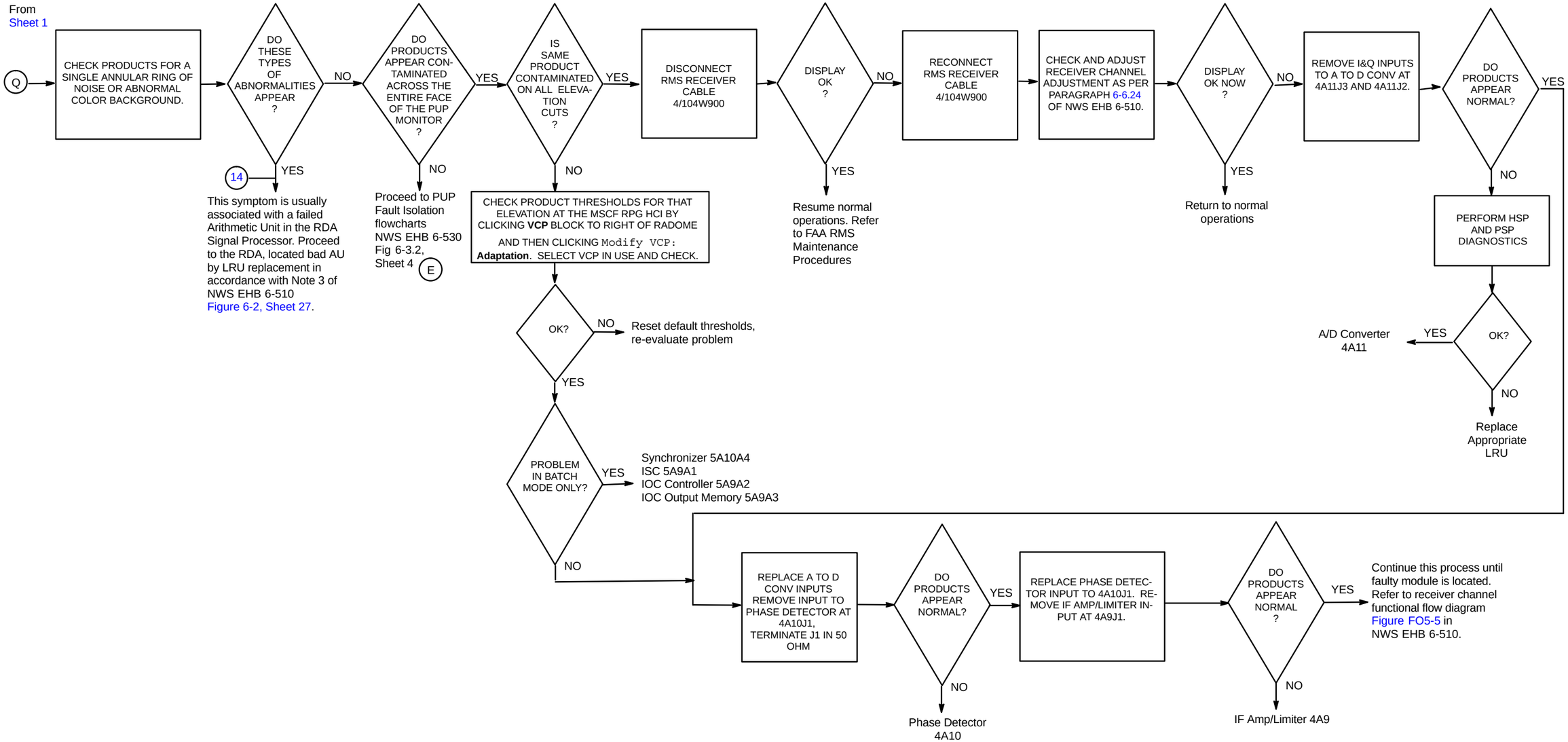


NX1998

Figure 6-1. System Fault Isolation Flowchart (Sheet 8 of 8)

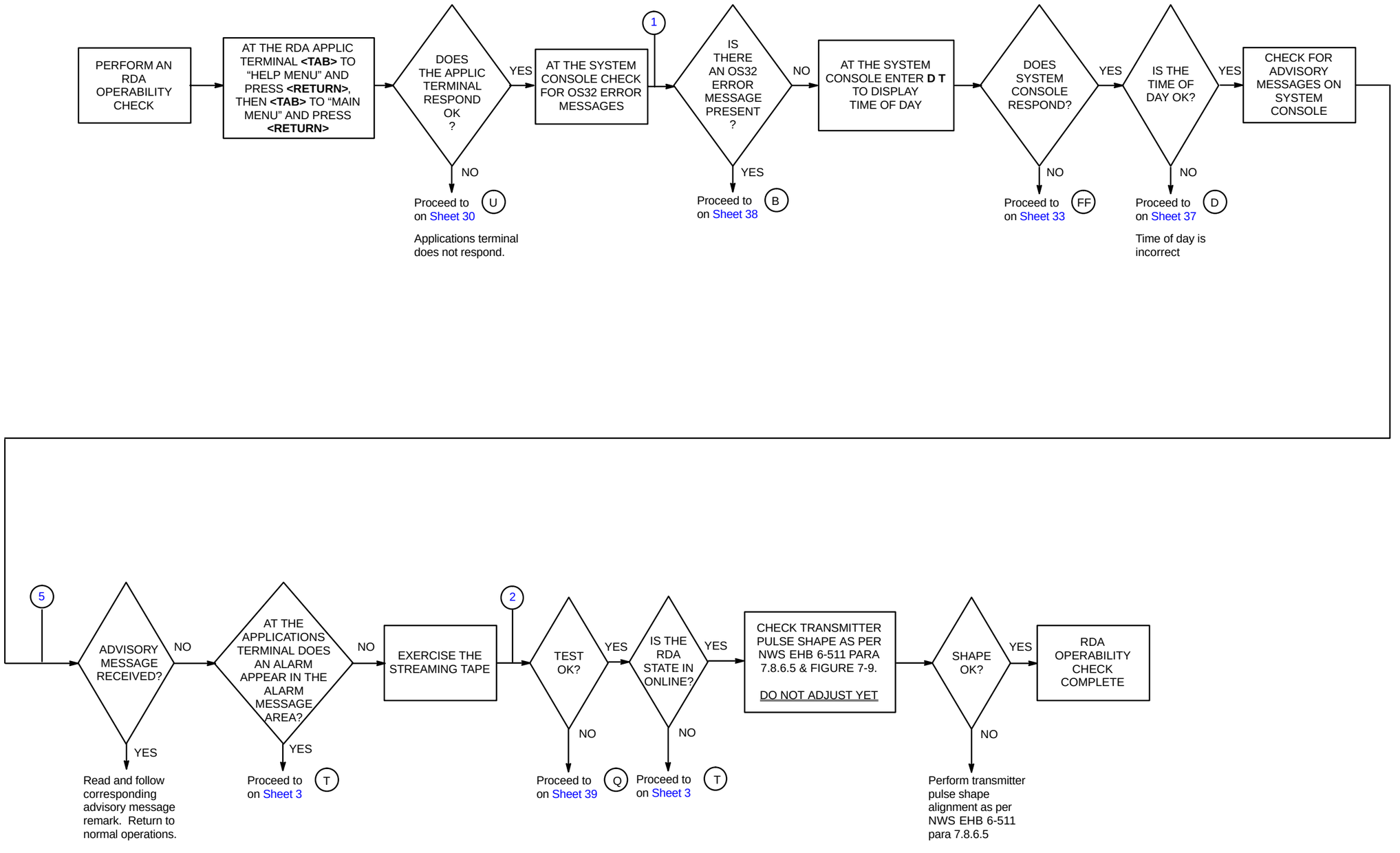


NX2000

Figure 6-2. RDA Fault Isolation Flowchart (Operability Check)
(Sheet 1 of 57)

| | | | |
|---|---|---|---|
| AN 08 ERROR MESSAGE IS PRESENT → See paragraph 6-4.7.1 RDA1 | A NODE#1 SLOT#4 ERROR MESSAGE IS PRESENT → M3200 5A12A4 | RDA INITIALIZATION TYPE ERROR IN ALARM AREA OF MAIN MENU → Proceed to on Sheet 32 (F) | AN 30 ERROR MESSAGE IS PRESENT → See paragraph 6-4.7.2 RDA2 |
| RDA STATE MAINTENANCE MANDATORY → Proceed to on Sheet 42 (A) | ARCHIVE II FAILURE → Proceed to on Sheet 1 of FO7-5, NWS EHB 6-560 (START) | ARCHIVE II I/O ERROR IN ALARM AREA → Proceed to on Sheet 1 of FO7-5, NWS EHB 6-560 (START) | SPS I/O ERROR → Proceed to on Sheet 27 (J) |
| RDA STATE MAINTENANCE REQUIRED → Proceed to on Sheet 48 (H) | RDA SOFTWARE BLANK → Proceed to on Sheet 32 (F) | DAU INITIALIZATION OR DAU I/O ERROR IN ALARM AREA OF MAIN MENU → Proceed to on Sheet 51 (P) | SPS INIT DOWNLOAD DMI, SMI, HSP LOOP FAILURE → Proceed to on Sheet 27 (J) |
| RDA ALARM (TOW, PED, XMTR, RCVR/SIG PROC, CONTROL, WIDEBAND, USER) → Proceed to on Sheet 3 (T) | RDA INOP → Proceed to on Sheet 3 (T) | NWS CONTROL SWITCH OVER FAILURE → Proceed to on Sheet 56 (A) | DEVICE INITIALIZATION ERROR → Proceed to on Sheet 32 (F) |
| RDA SYSTEM CONSOLE DOES NOT RESPOND PROPERLY, MAINT TERMINAL OK → Proceed to on Sheet 33 (FF) | RDA COMMAND SHUTDOWN → Proceed to on Sheet 37 (P) | APPLICATION TERMINAL DOES NOT FUNCTION PROPERLY → Proceed to on Sheet 30 (U) | DEVICE I/O ERROR → Proceed to on Sheet 32 (F) |
| NWS FULL OFF POWER ON PROBLEM → Proceed to on Sheet 57 (A) | RDA OCCURENCE OR FILTERED OCCURENCE ALARM → Proceed to on Sheet 32 (F) | NO INTERPROCESSOR COMMAND RESPONSE → Proceed to on Sheet 52 (A) | MAINT CONSOLE (MMI) INITIALIZATION OR I/O ERROR → Proceed to on Sheet 32 (F) |
| TIME OF DAY IS INCORRECT → Proceed to on Sheet 37 (D) | RDA OS32 ERROR MESSAGE IS PRESENT → Proceed to on Sheet 30 (U) | DISK I/O ERROR IN ALARM AREA → Proceed to on Sheet 38 (B) | |

NX2001

Figure 6-2. RDA Fault Isolation Flowchart (Quick Reference Sheet)
(Sheet 2 of 57)

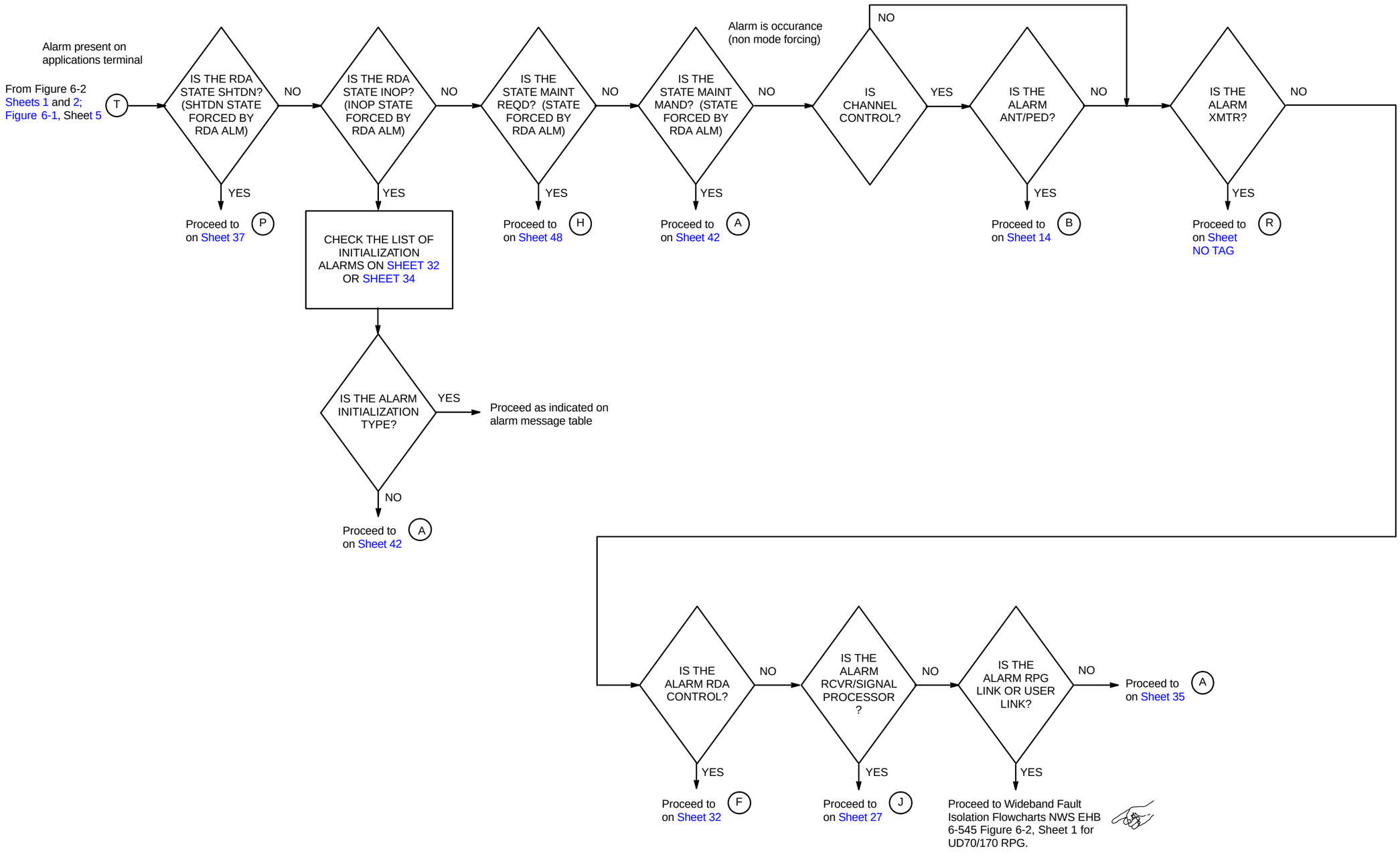


NX2002

Figure 6-2. RDA Fault Isolation Flowchart (RDA Alarms - INOP) (Sheet 3 of 57)

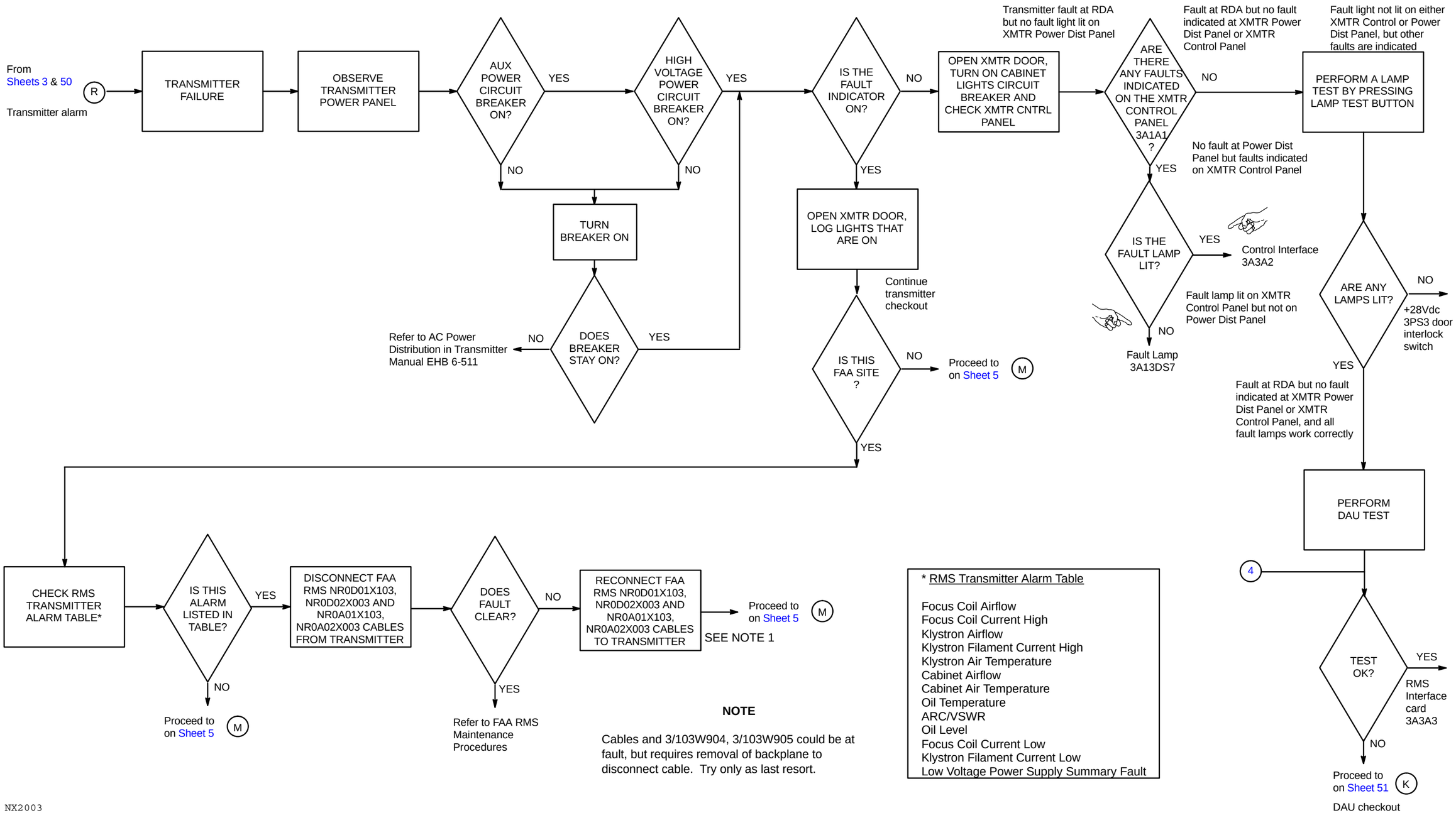


Figure 6-2. RDA Fault Isolation Flowchart (INOP XMTR Indicators) (Sheet 4 of 57)

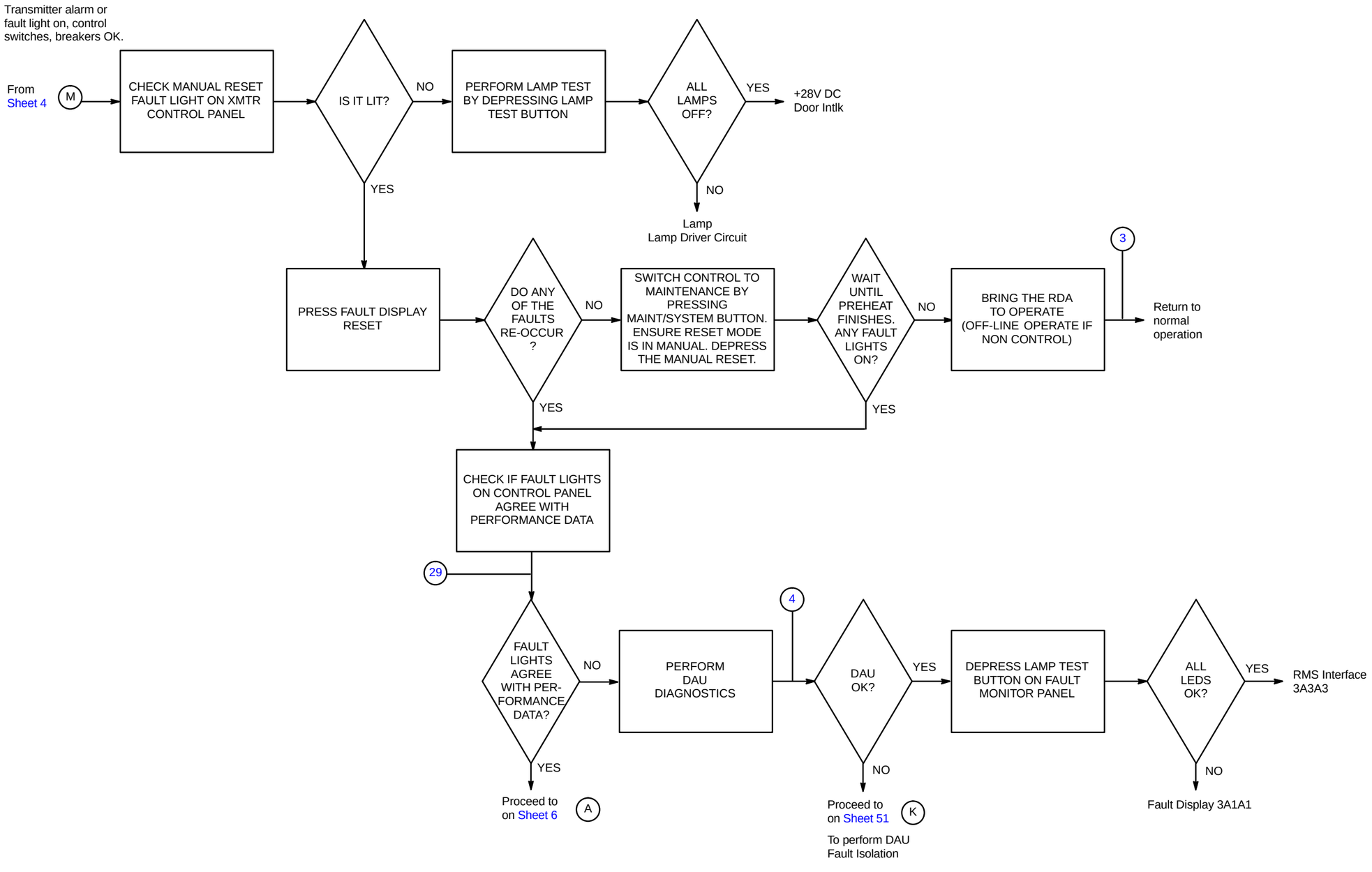


NX2004

Figure 6-2. RDA Fault Isolation Flowchart (INOP XMTR Indicators) (Sheet 5 of 57)

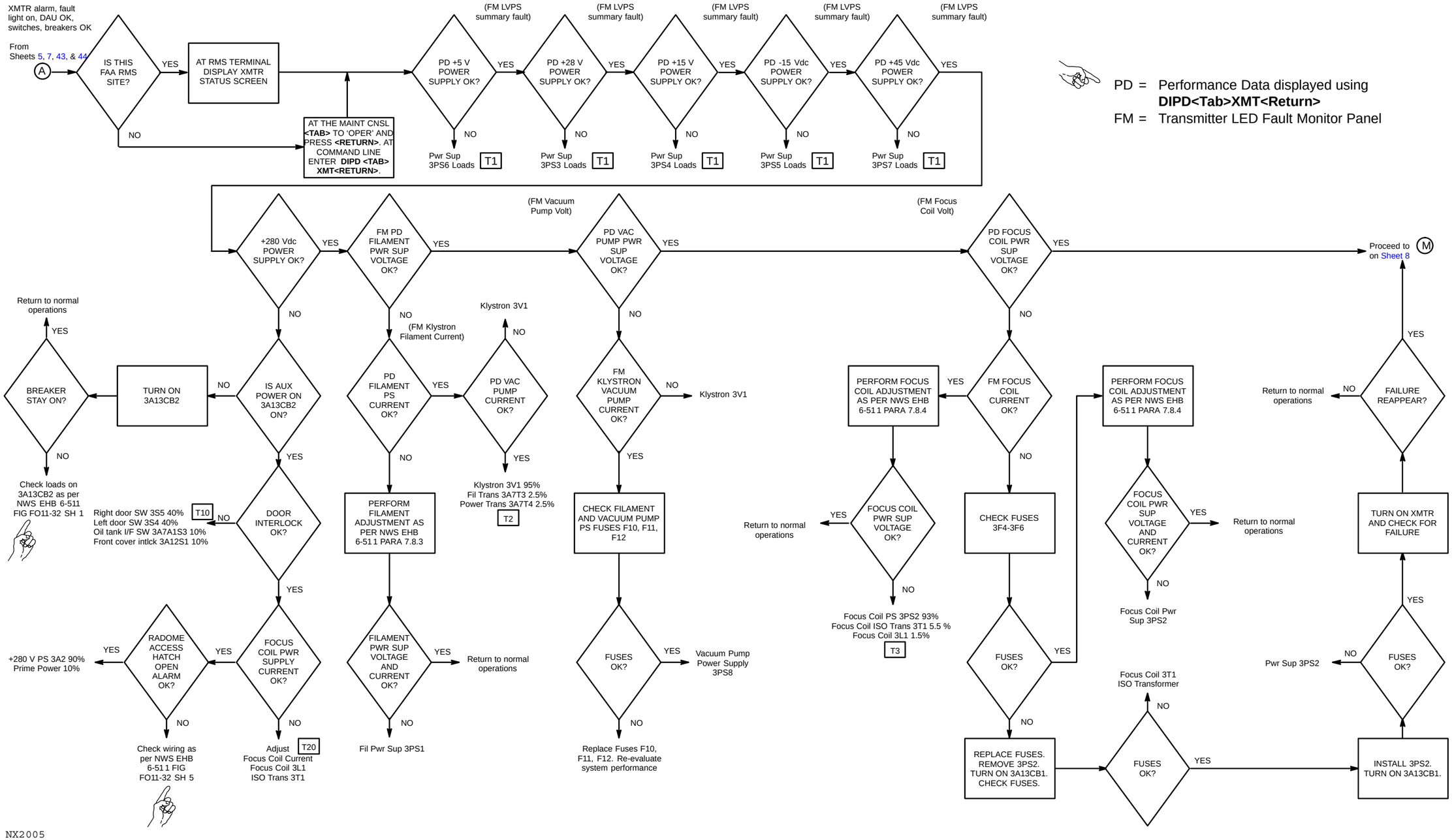


Figure 6-2. RDA Fault Isolation Flowchart (Transmitter) (Sheet 6 of 57)

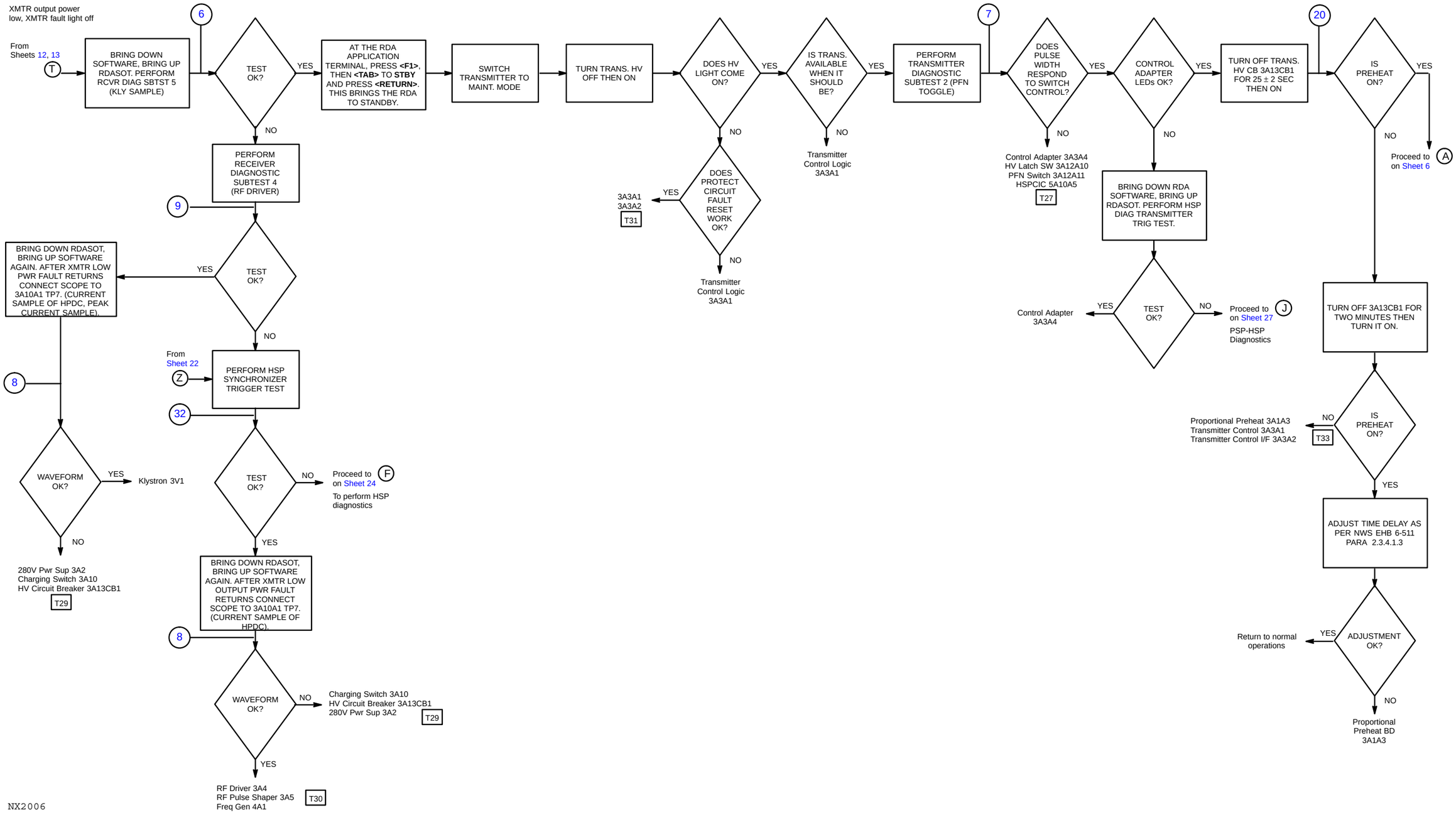


Figure 6-2. RDA Fault Isolation Flowchart (Transmitter) (Sheet 7 of 57)

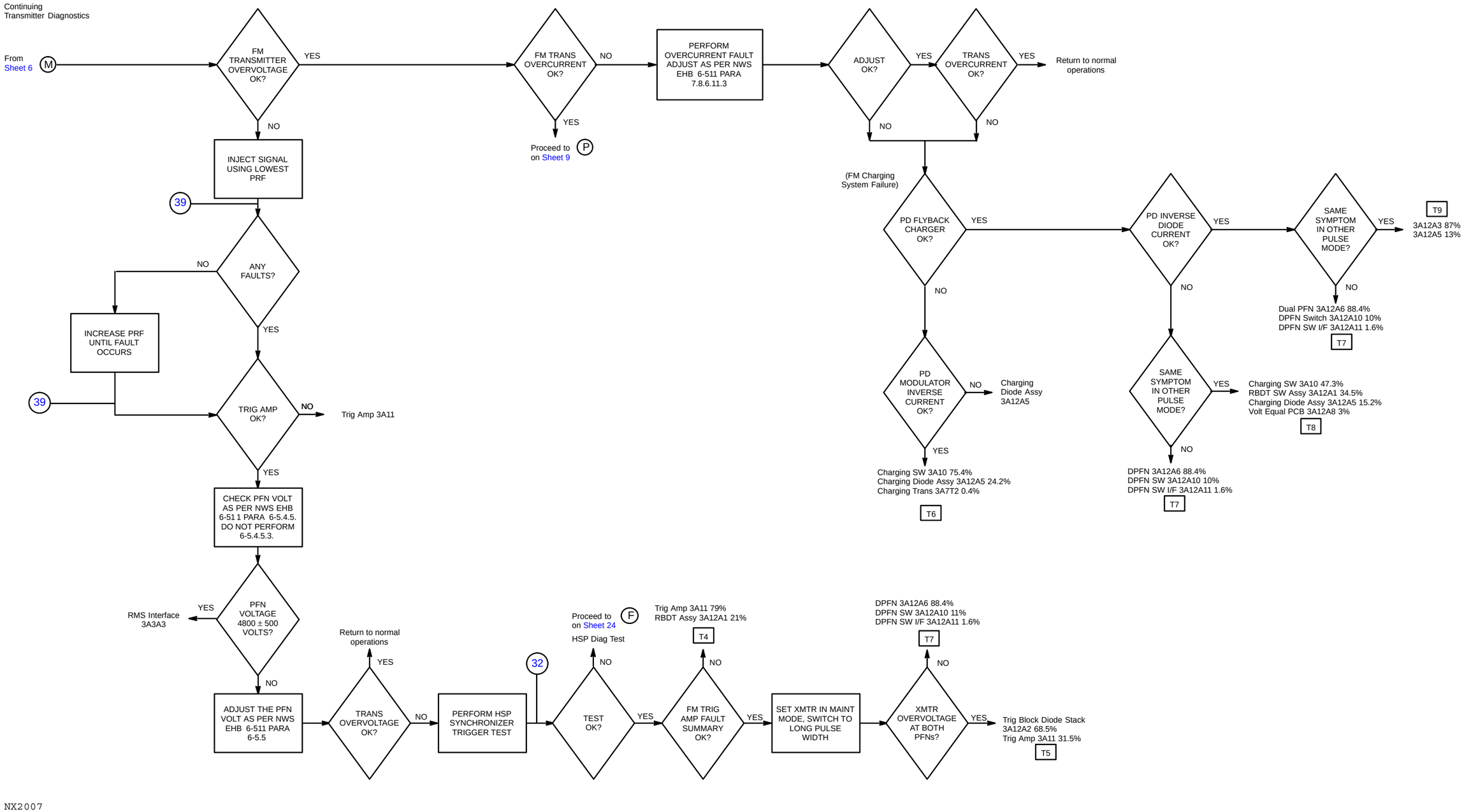


NX2007

Figure 6-2. RDA Fault Isolation Flowchart (Transmitter) (Sheet 8 of 57)

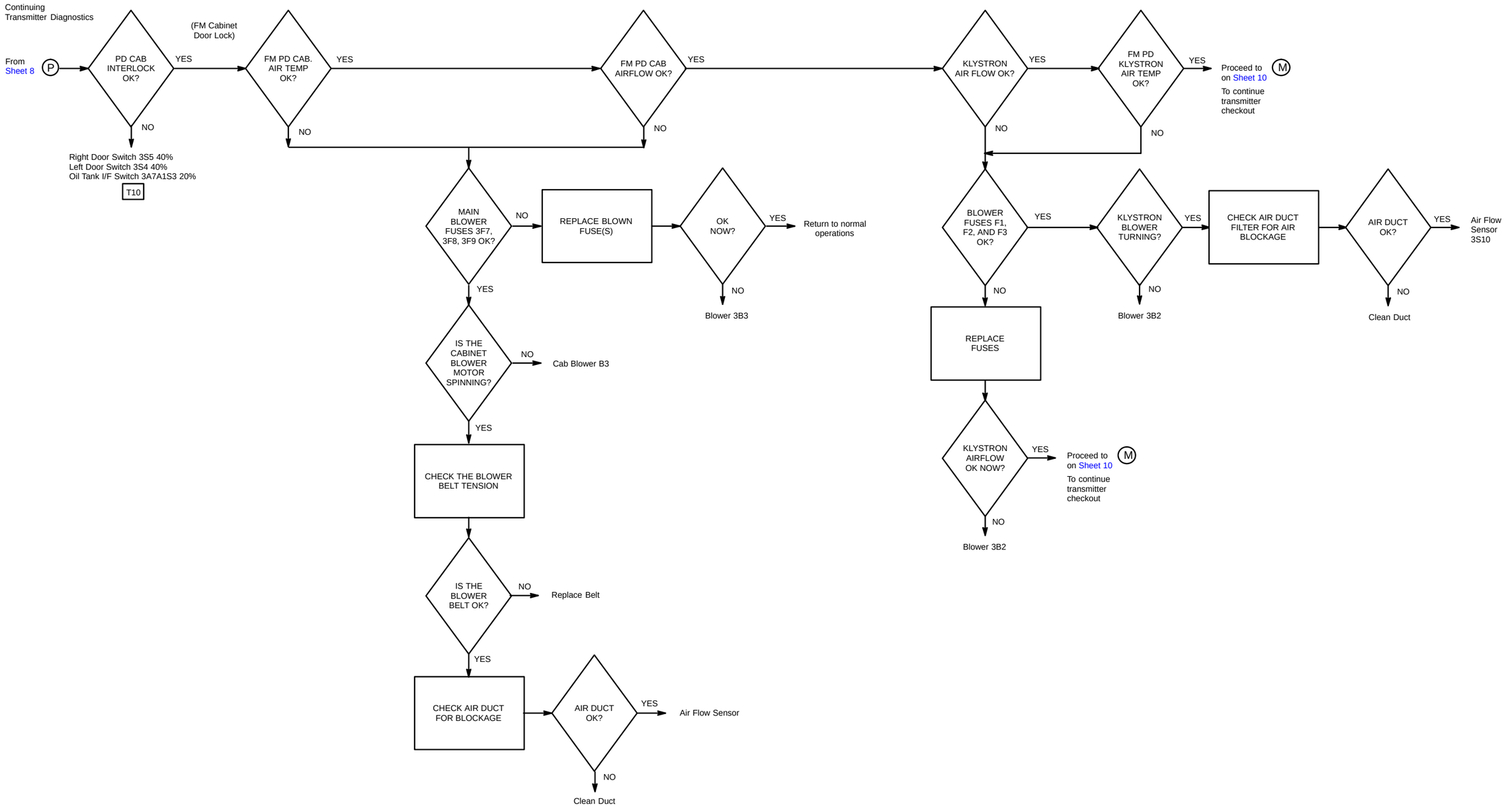


NX2008

Figure 6-2. RDA Fault Isolation Flowchart (Transmitter) (Sheet 9 of 57)

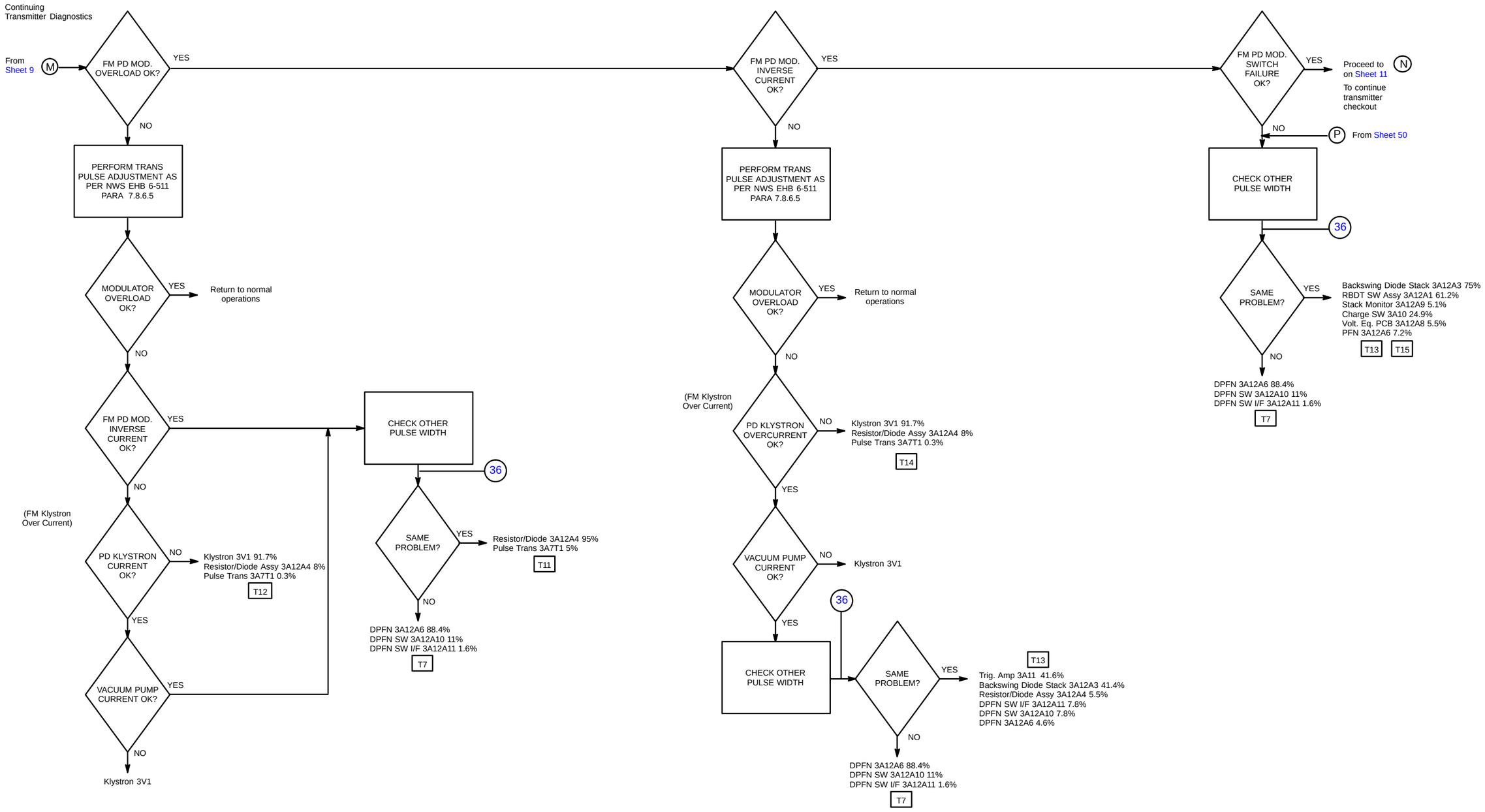


Figure 6-2. RDA Fault Isolation Flowchart (Transmitter) (Sheet 10 of 57)

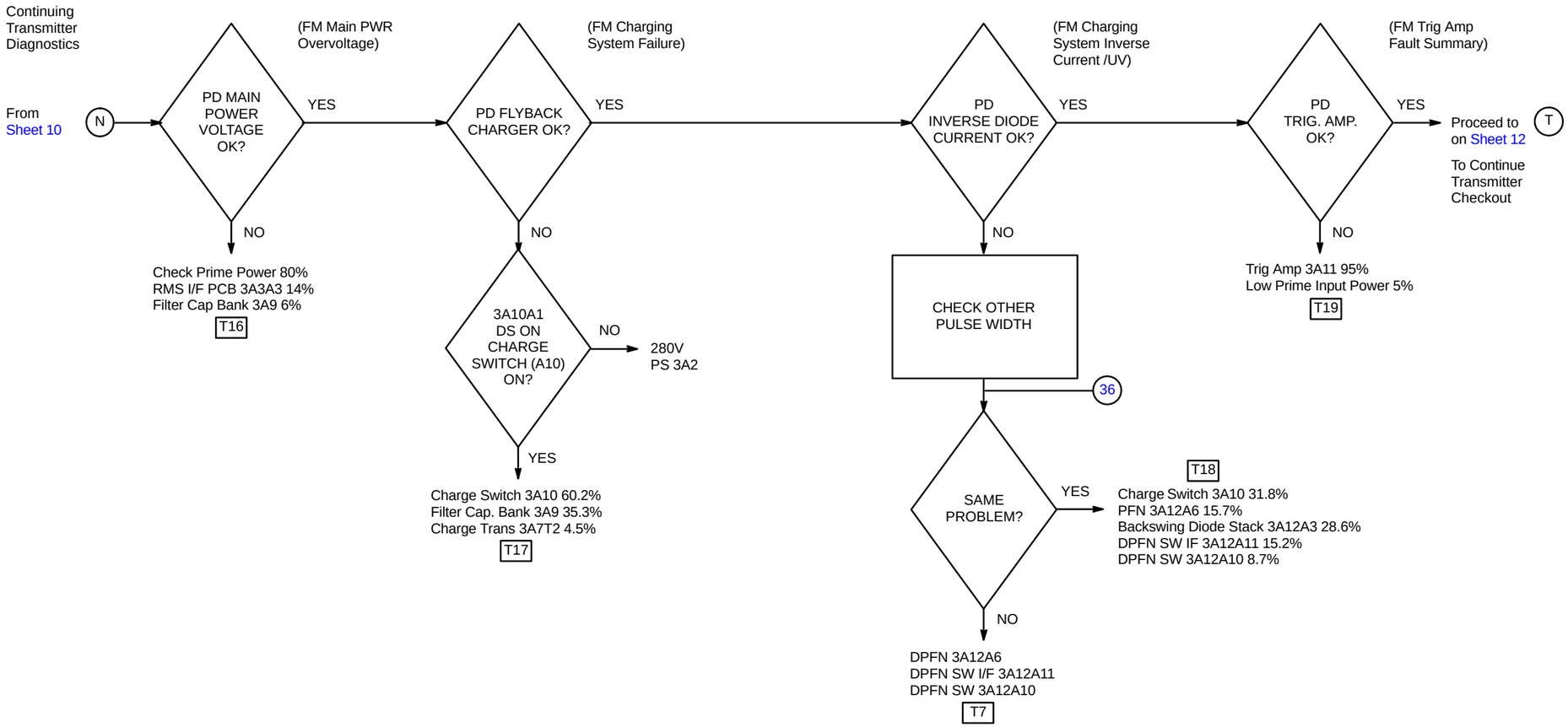


NX2010

Figure 6-2. RDA Fault Isolation Flowchart (Transmitter)
(Sheet 11 of 57)

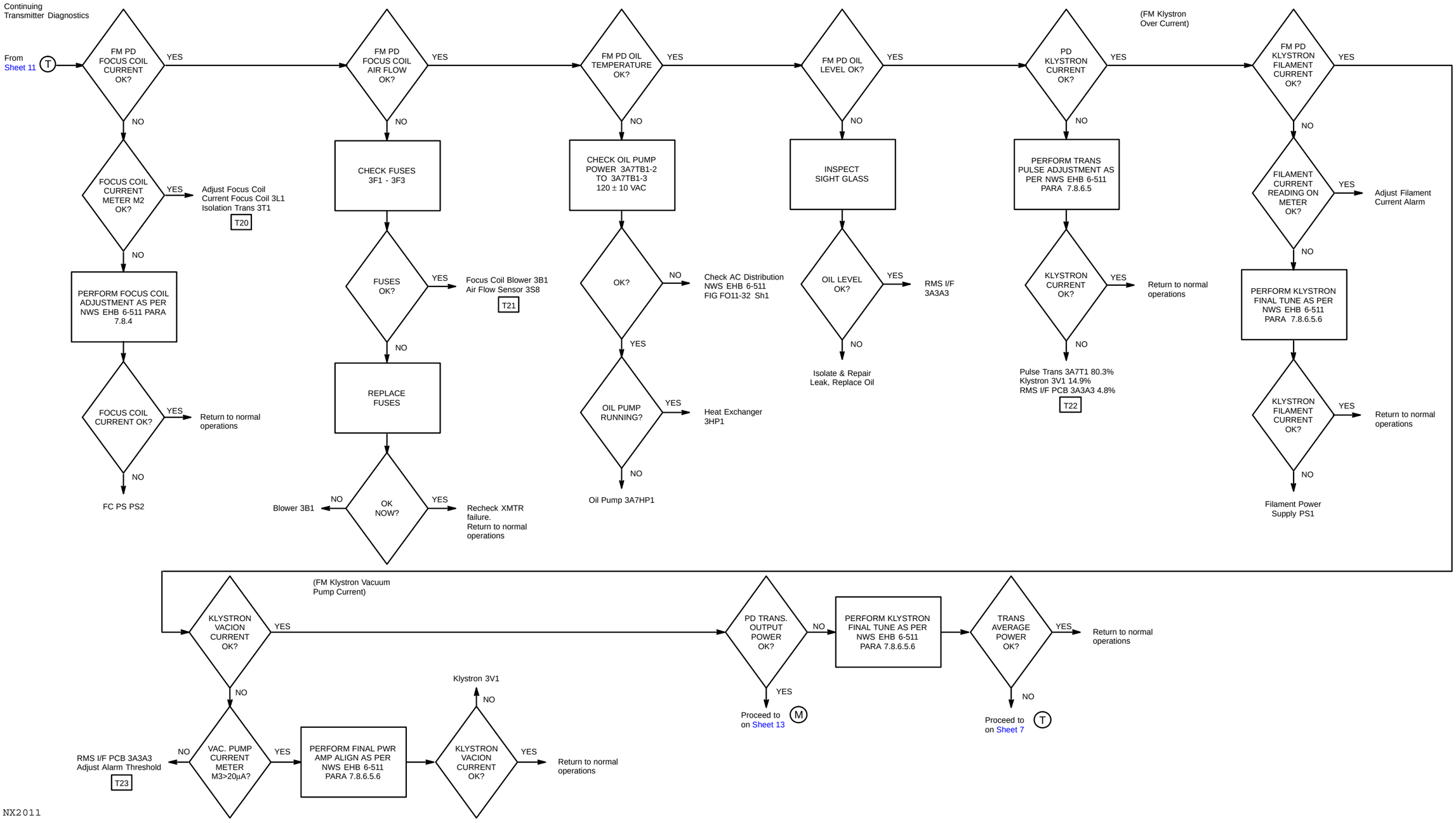


Figure 6-2. RDA Fault Isolation Flowchart (Transmitter)
(Sheet 12 of 57)

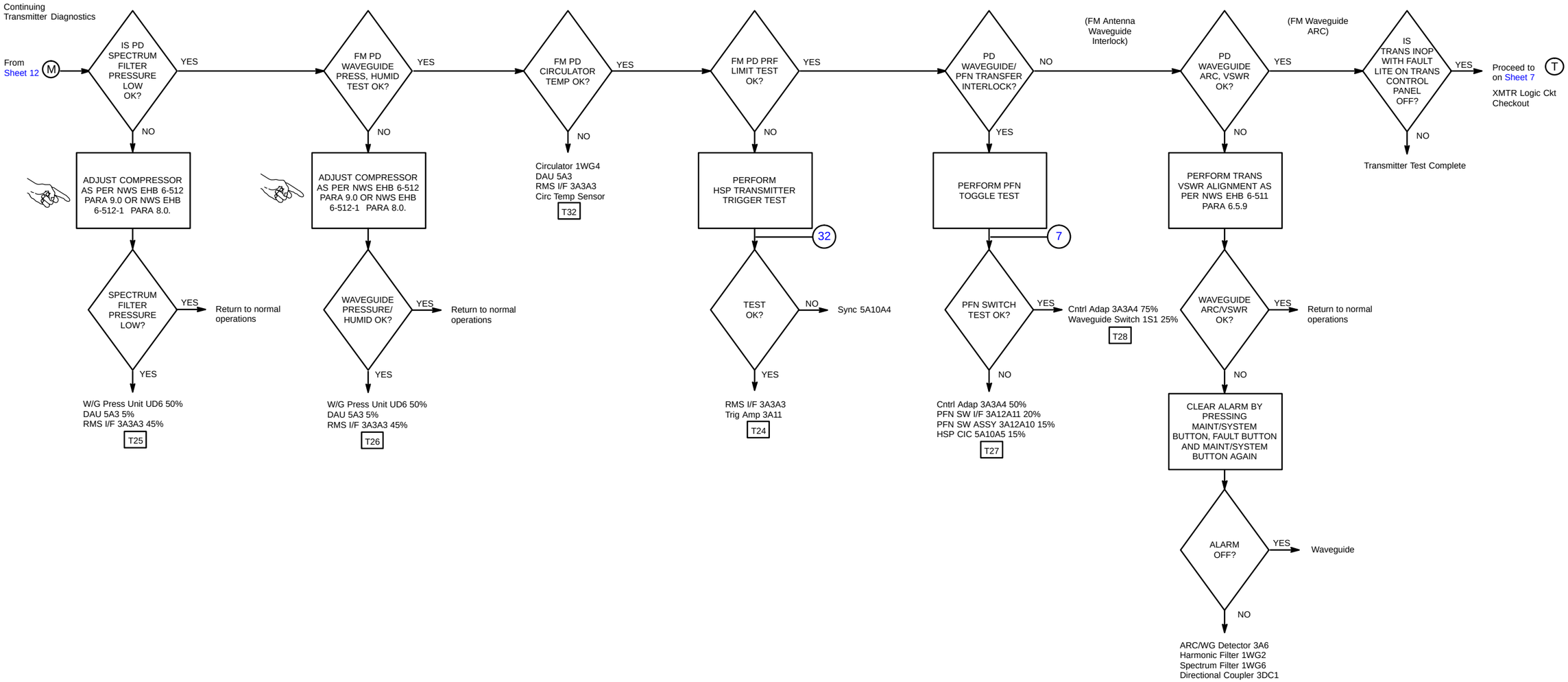


NX2012

Figure 6-2. RDA Fault Isolation Flowchart (Transmitter) (Sheet 13 of 57)

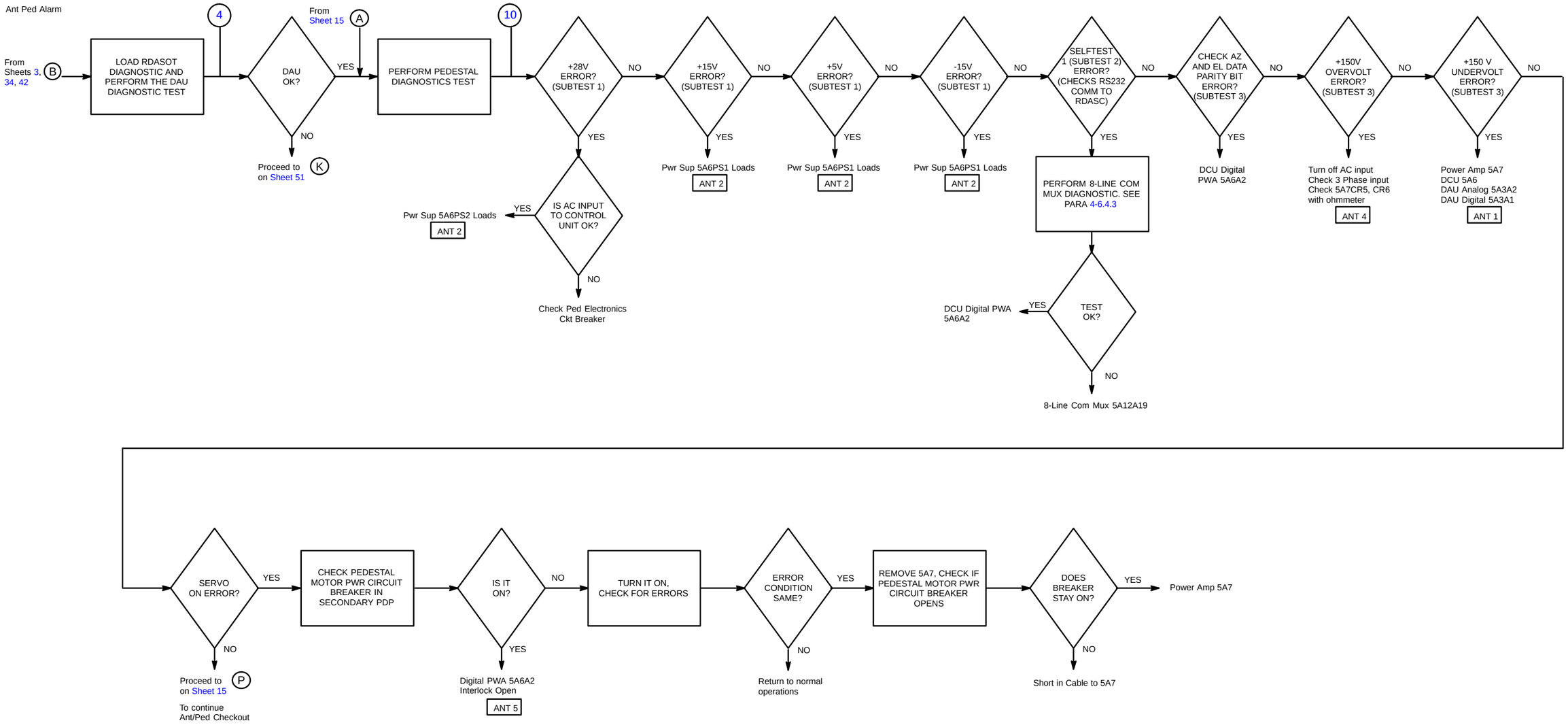


NX2013

Figure 6-2. RDA Fault Isolation Flowchart (Ant/Ped)
(Sheet 14 of 57)

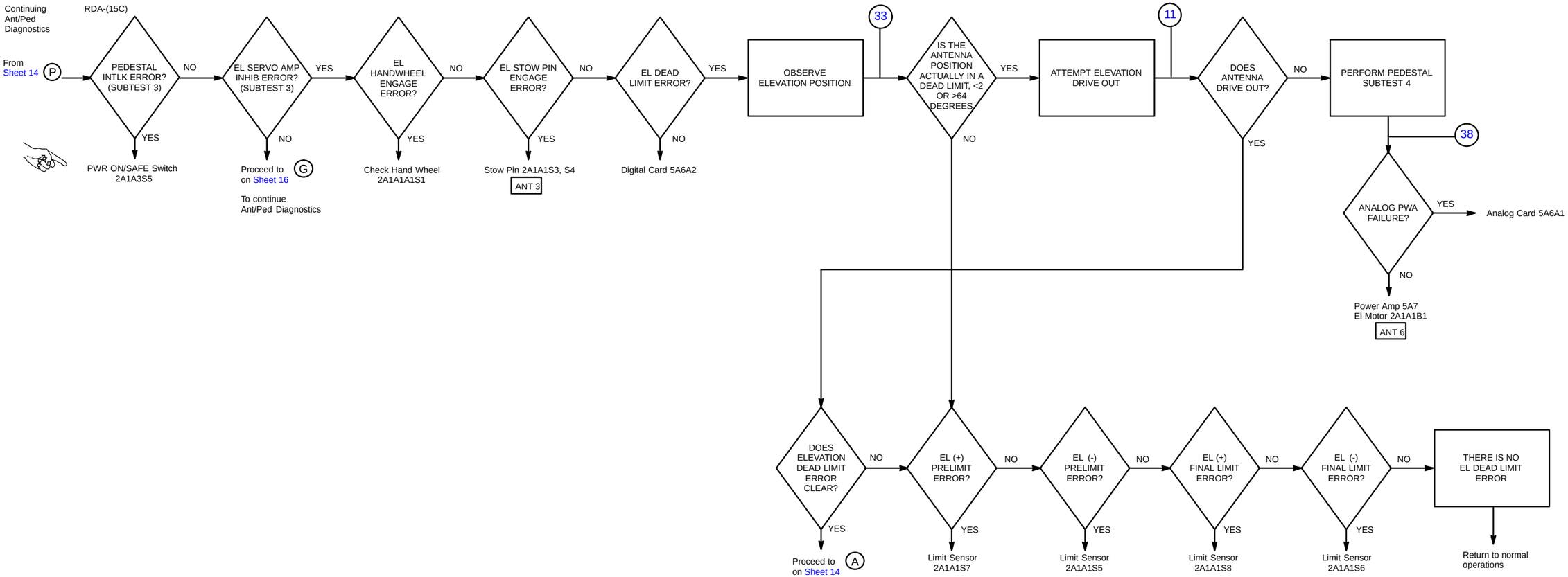


NX2014

Figure 6-2. RDA Fault Isolation Flowchart (Ant/Ped)
(Sheet 15 of 57)

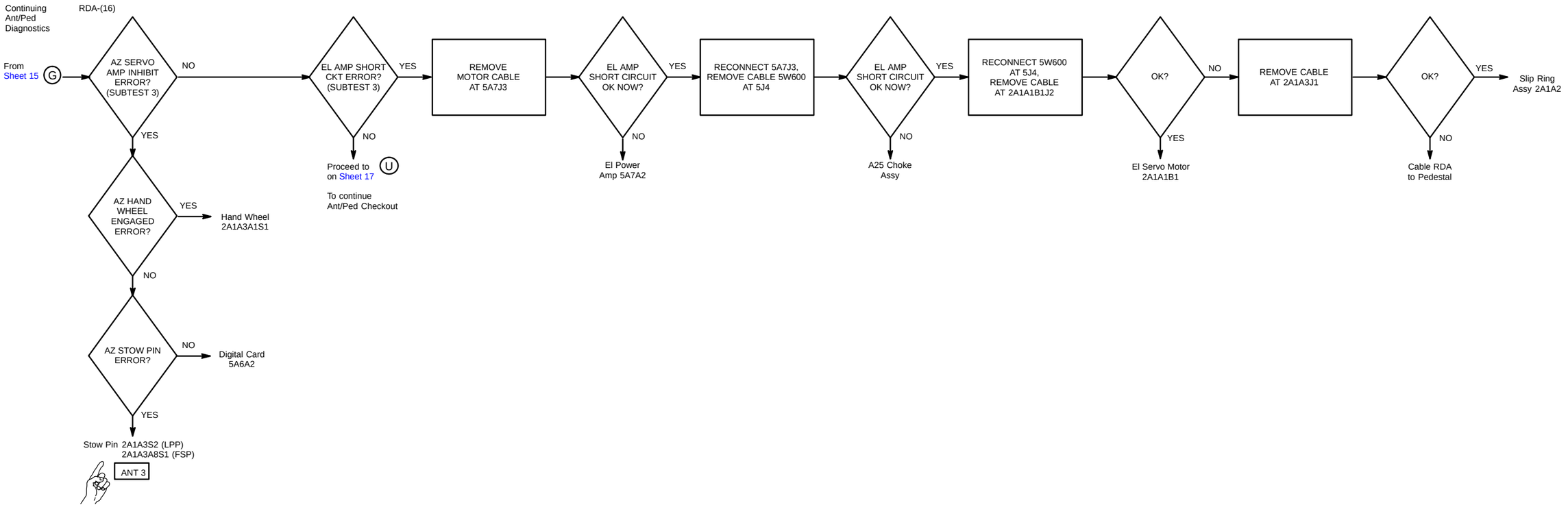


NX2015

Figure 6-2. PUP Fault Isolation Flowchart (Ant/Ped)
(Sheet 16 of 57)

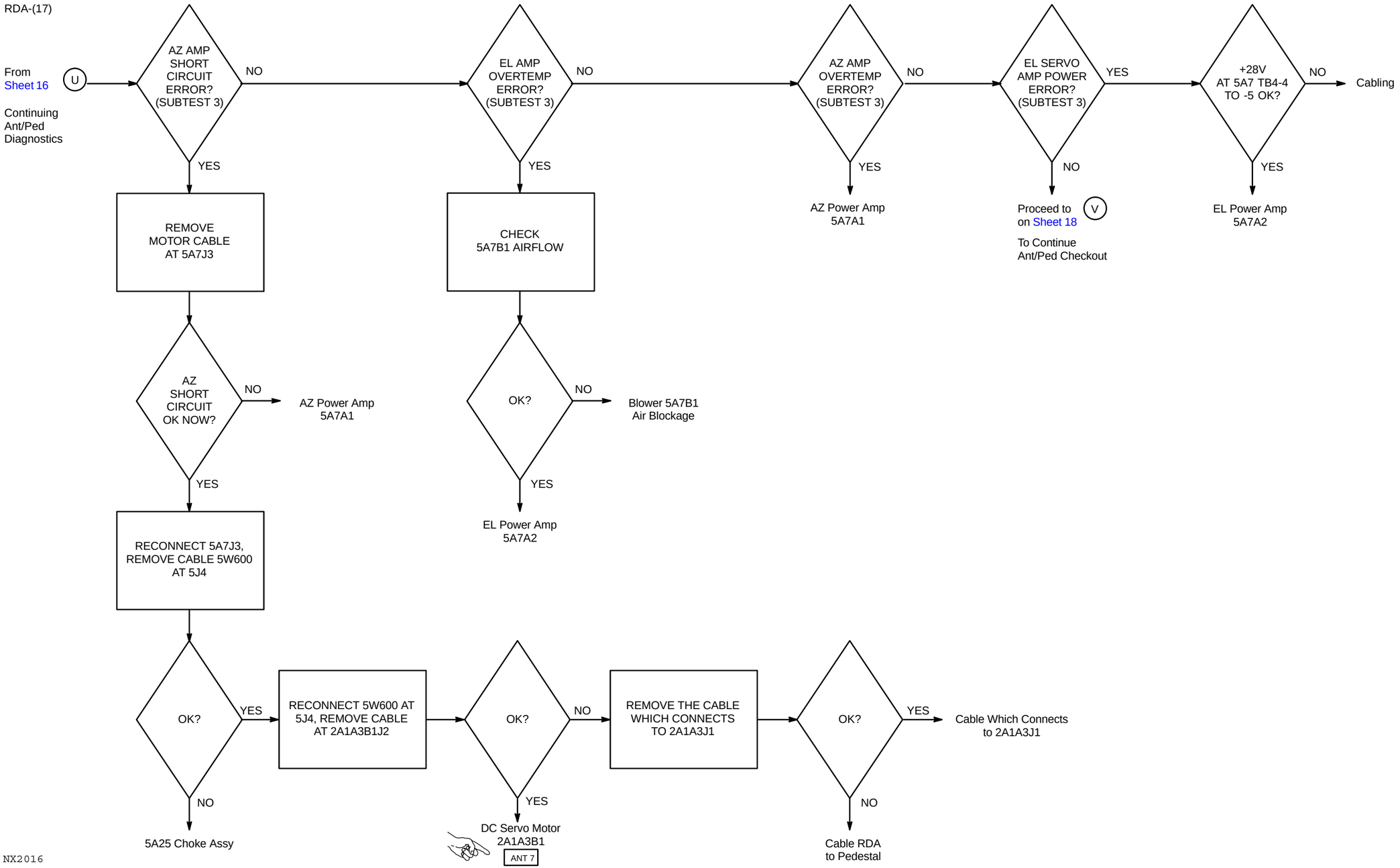


Figure 6-2. RDA Fault Isolation Flowchart (Ant/Ped) (Sheet 17 of 57)

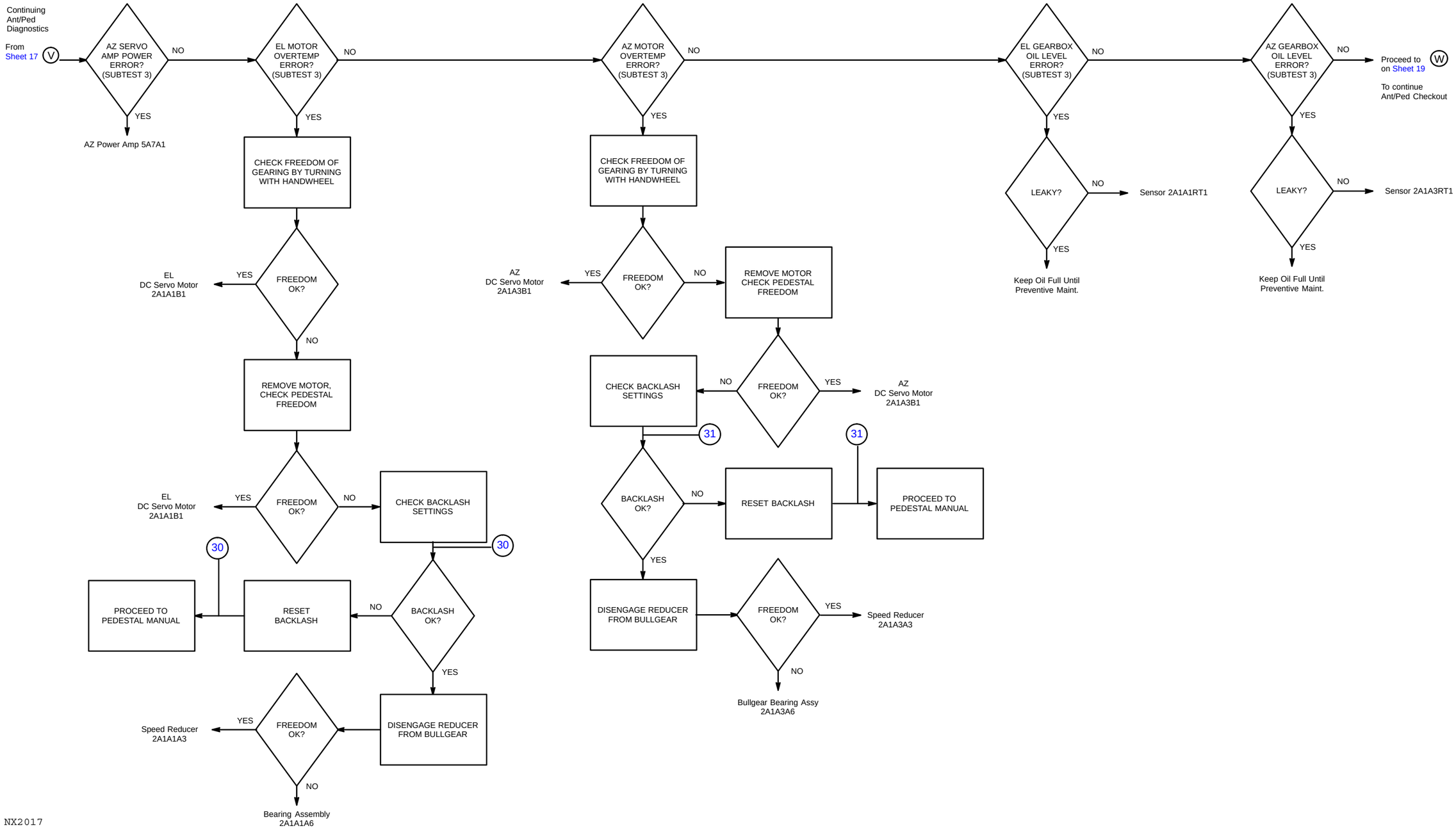


NX2017

Figure 6-2. RDA Fault Isolation Flowchart (Ant/Ped) (Sheet 18 of 57)

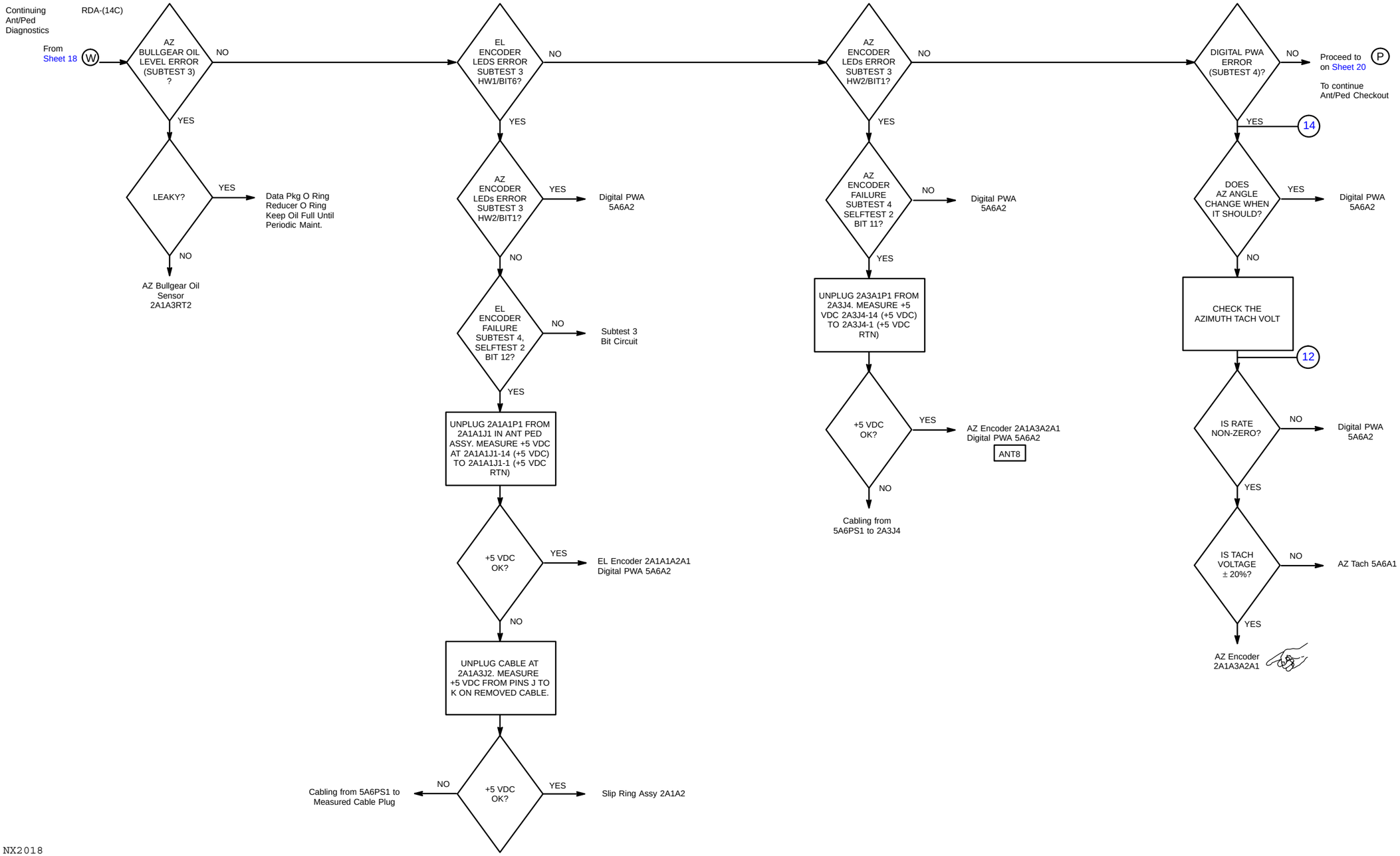


NX2018

Figure 6-2. RDA Fault Isolation Flowchart (Ant/Ped) (Sheet 19 of 57)

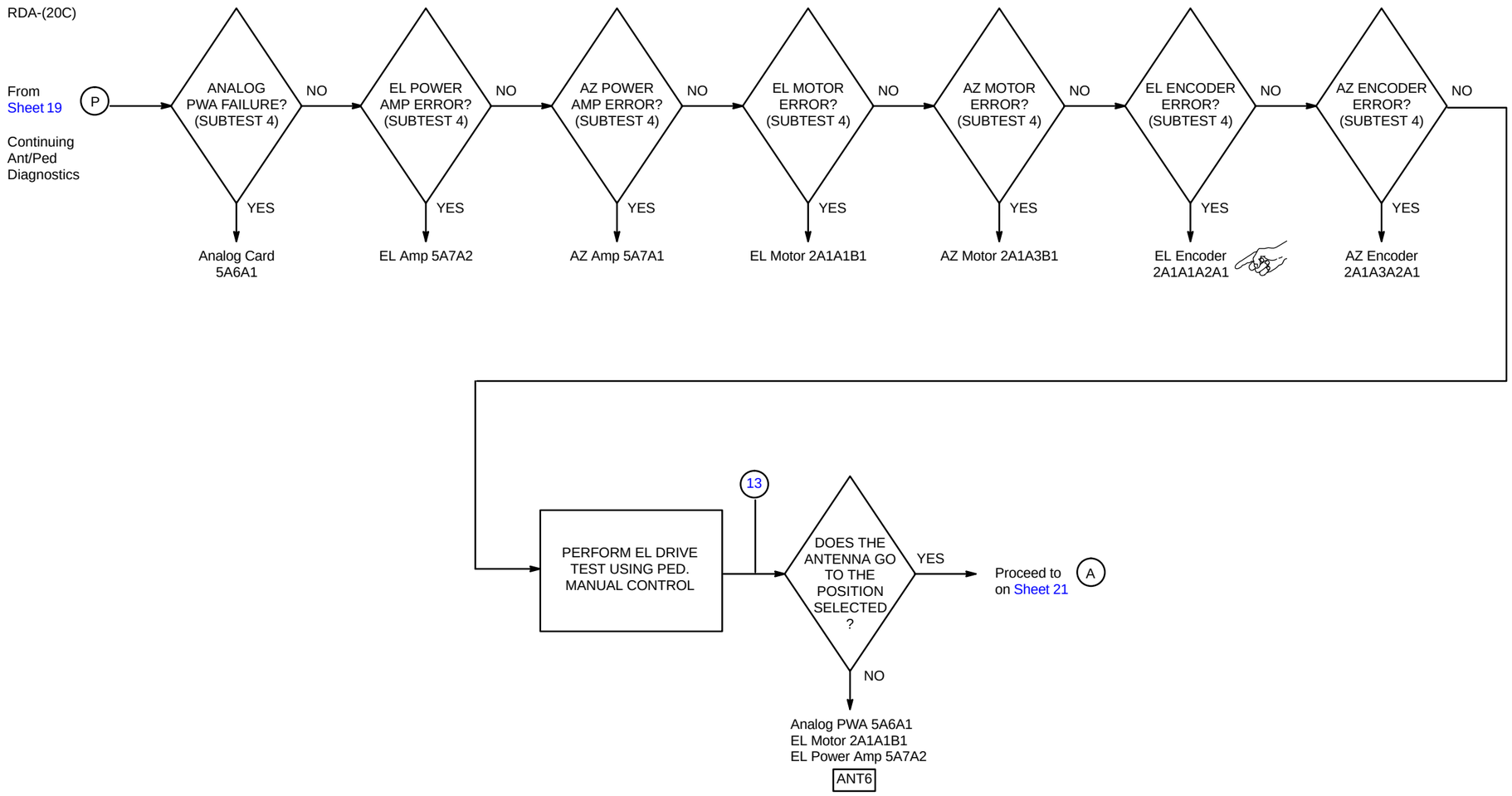


NX2019

Figure 6-2. RDA Fault Isolation Flowchart (Ant/Ped) (Sheet 20 of 57)

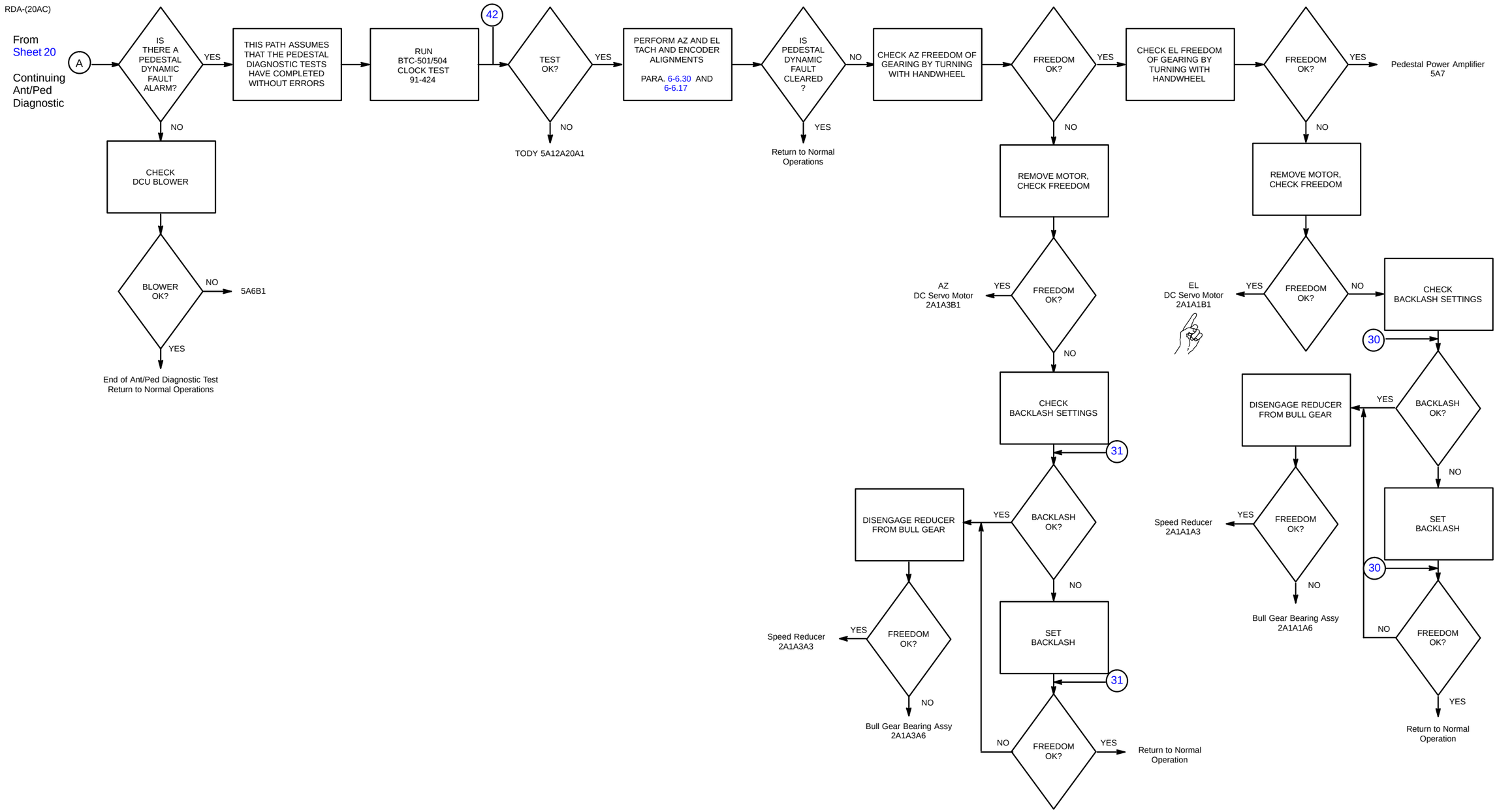


NX2020

Figure 6-2. RDA Fault Isolation Flowchart (Ant/Ped) (Sheet 21 of 57)

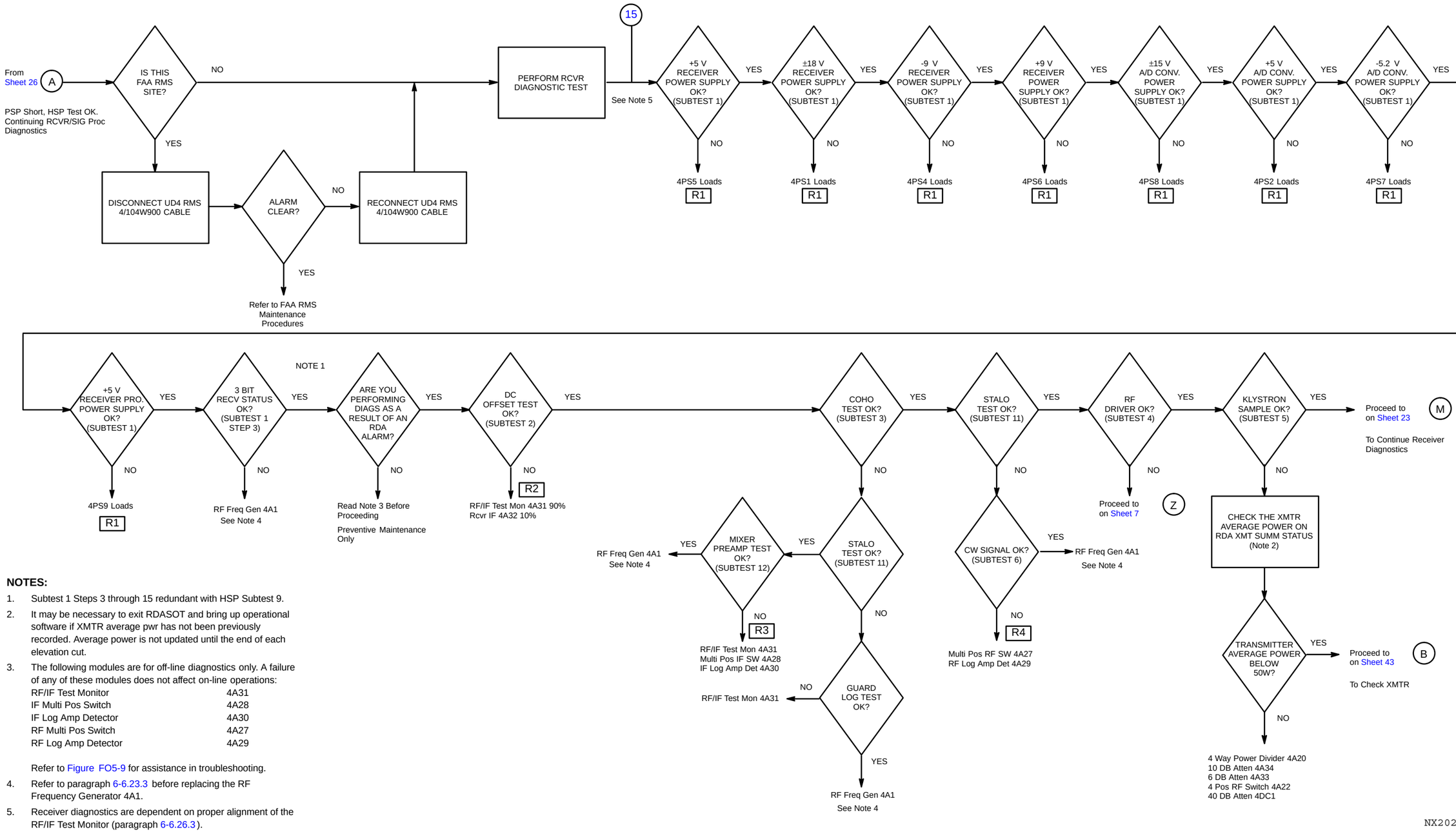


**NOTES:**

1. Subtest 1 Steps 3 through 15 redundant with HSP Subtest 9.
2. It may be necessary to exit RDASOT and bring up operational software if XMTR average pwr has not been previously recorded. Average power is not updated until the end of each elevation cut.
3. The following modules are for off-line diagnostics only. A failure of any of these modules does not affect on-line operations:

| | |
|---|---|
| RF/IF Test Monitor | 4A31 |
| IF Multi Pos Switch | 4A28 |
| IF Log Amp Detector | 4A30 |
| RF Multi Pos Switch | 4A27 |
| RF Log Amp Detector | 4A29 |

   Refer to Figure FO5-9 for assistance in troubleshooting.
4. Refer to paragraph 6-6.23.3 before replacing the RF Frequency Generator 4A1.
5. Receiver diagnostics are dependent on proper alignment of the RF/IF Test Monitor (paragraph 6-6.26.3).

Figure 6-2. RDA Fault Isolation Flowchart (Receiver) (Sheet 22 of 57)

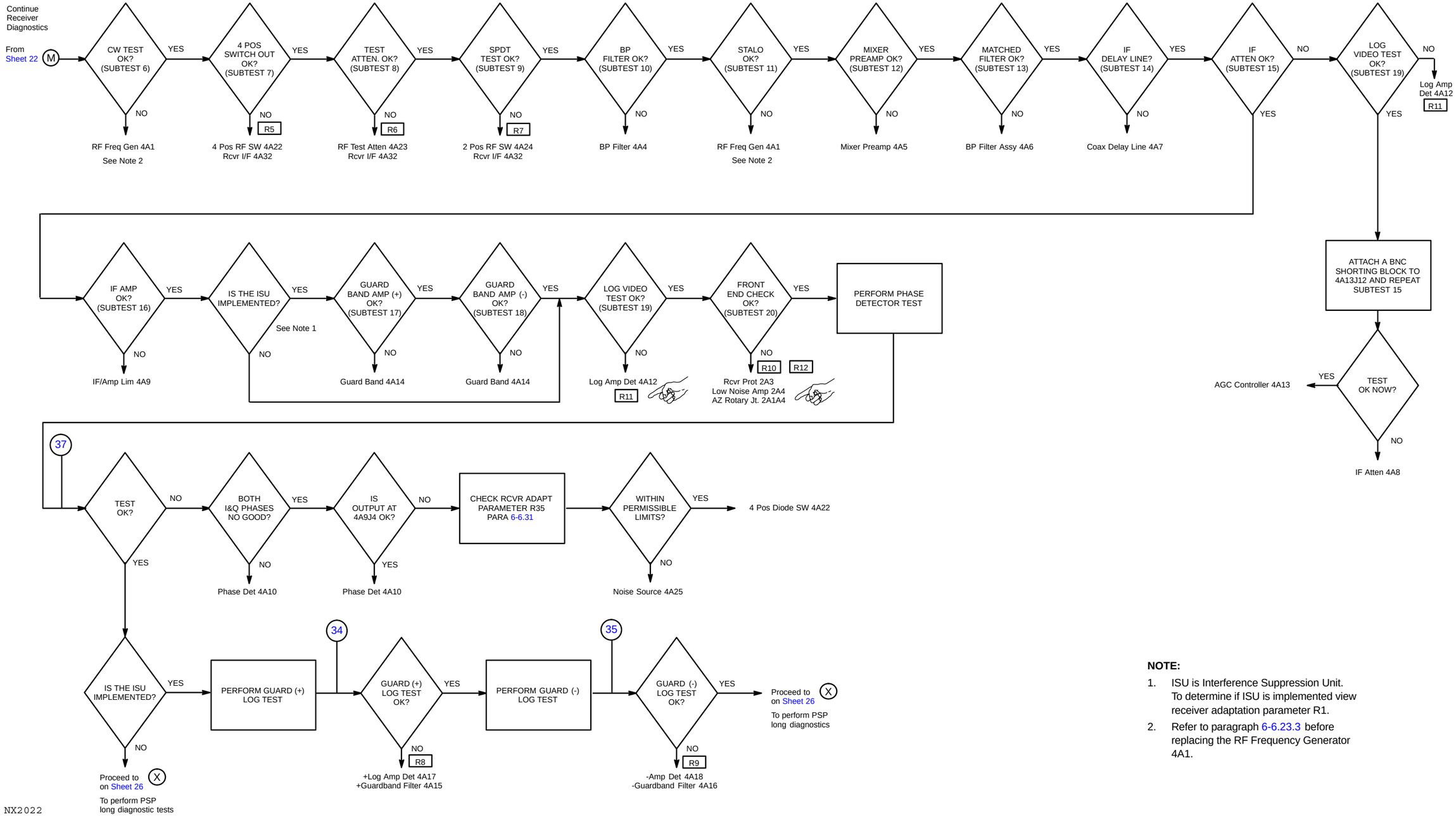


**NOTE:**

1. ISU is Interference Suppression Unit. To determine if ISU is implemented view receiver adaptation parameter R1.
2. Refer to paragraph 6-6.23.3 before replacing the RF Frequency Generator 4A1.

Figure 6-2. RDA Fault Isolation Flowchart (Receiver) (Sheet 23 of 57)

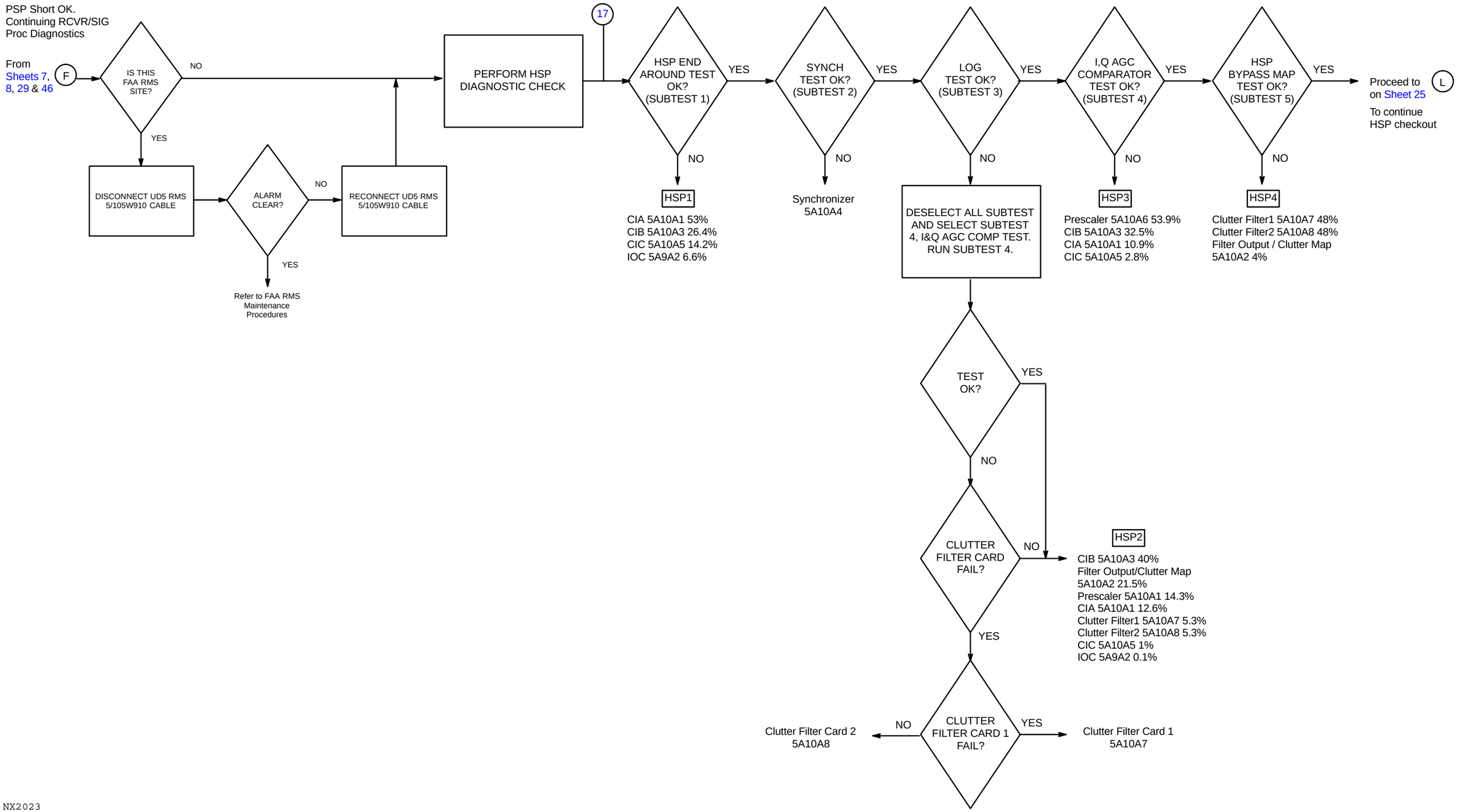


NX2023

Figure 6-2. RDA Fault Isolation Flowchart (HSP)
(Sheet 24 of 57)

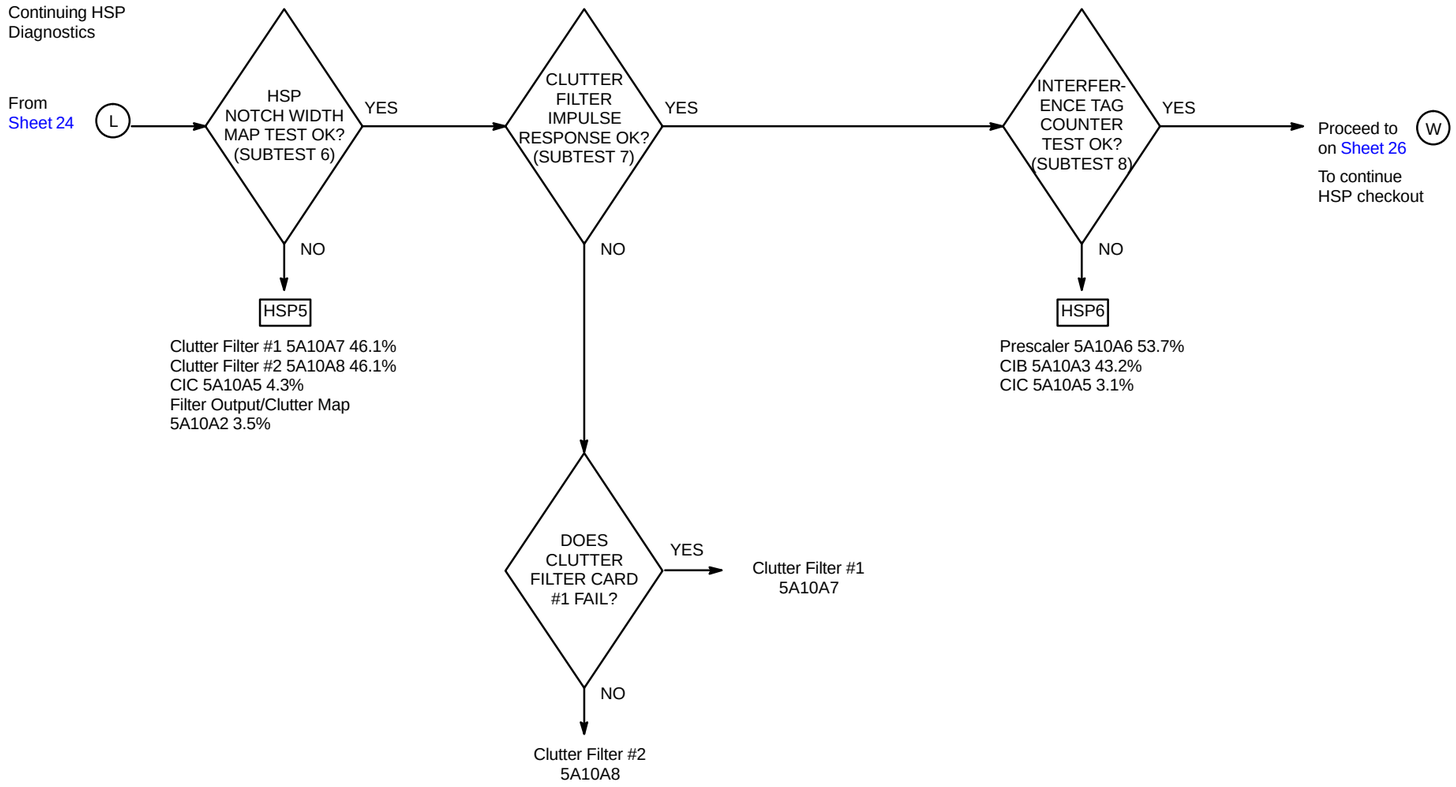


NX2024

Figure 6-2. RDA Fault Isolation Flowchart (HSP)
(Sheet 25 of 57)

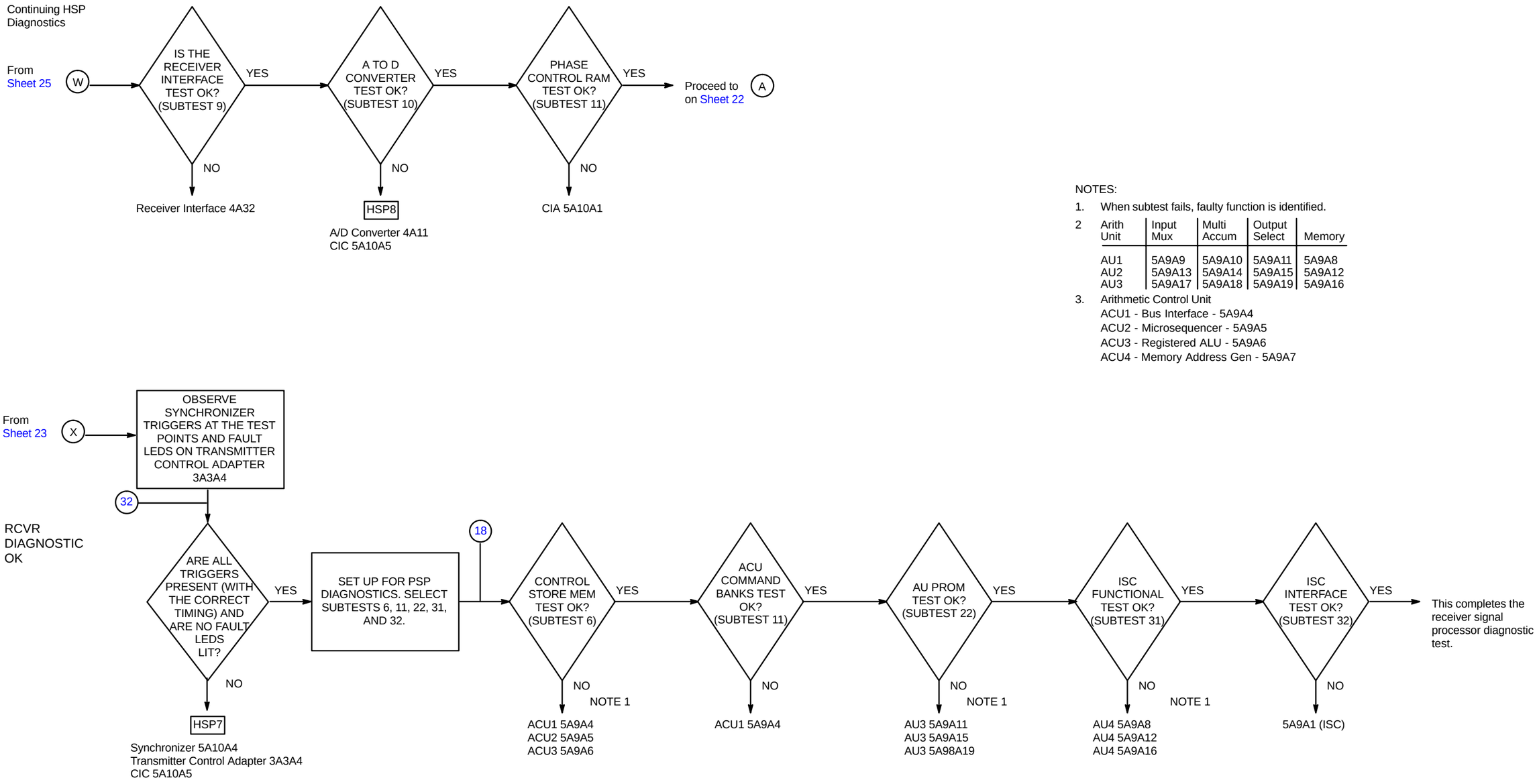


NOTES:

1. When subtest fails, faulty function is identified.
2. 

| Arith Unit | Input Mux | Multi Accum | Output Select | Memory |
|---|---|---|---|---|
| AU1 | 5A9A9 | 5A9A10 | 5A9A11 | 5A9A8 |
| AU2 | 5A9A13 | 5A9A14 | 5A9A15 | 5A9A12 |
| AU3 | 5A9A17 | 5A9A18 | 5A9A19 | 5A9A16 |

3. Arithmetic Control Unit
   ACU1 - Bus Interface - 5A9A4
   ACU2 - Microsequencer - 5A9A5
   ACU3 - Registered ALU - 5A9A6
   ACU4 - Memory Address Gen - 5A9A7

NX2025

Figure 6-2. RDA Fault Isolation Flowchart (HSP/PSP) (Sheet 26 of 57)

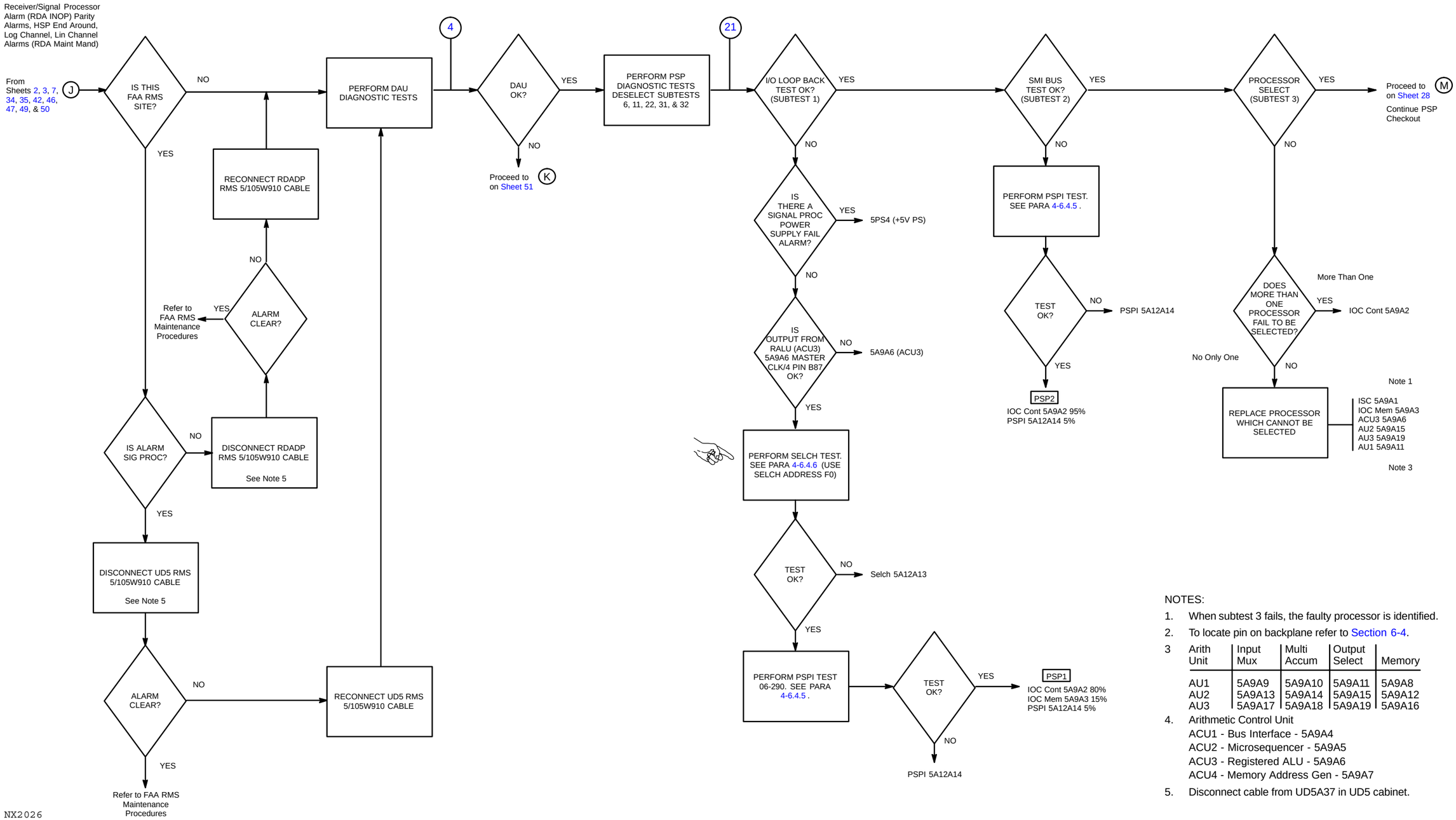


NOTES:

1. When subtest 3 fails, the faulty processor is identified.
2. To locate pin on backplane refer to Section 6-4.
3. 

| Arith Unit | Input Mux | Multi Accum | Output Select | Memory |
|---|---|---|---|---|
| AU1 | 5A9A9 | 5A9A10 | 5A9A11 | 5A9A8 |
| AU2 | 5A9A13 | 5A9A14 | 5A9A15 | 5A9A12 |
| AU3 | 5A9A17 | 5A9A18 | 5A9A19 | 5A9A16 |

4. Arithmetic Control Unit
   ACU1 - Bus Interface - 5A9A4
   ACU2 - Microsequencer - 5A9A5
   ACU3 - Registered ALU - 5A9A6
   ACU4 - Memory Address Gen - 5A9A7
5. Disconnect cable from UD5A37 in UD5 cabinet.

Figure 6-2. RDA Fault Isolation Flowchart (PSP) (Sheet 27 of 57)

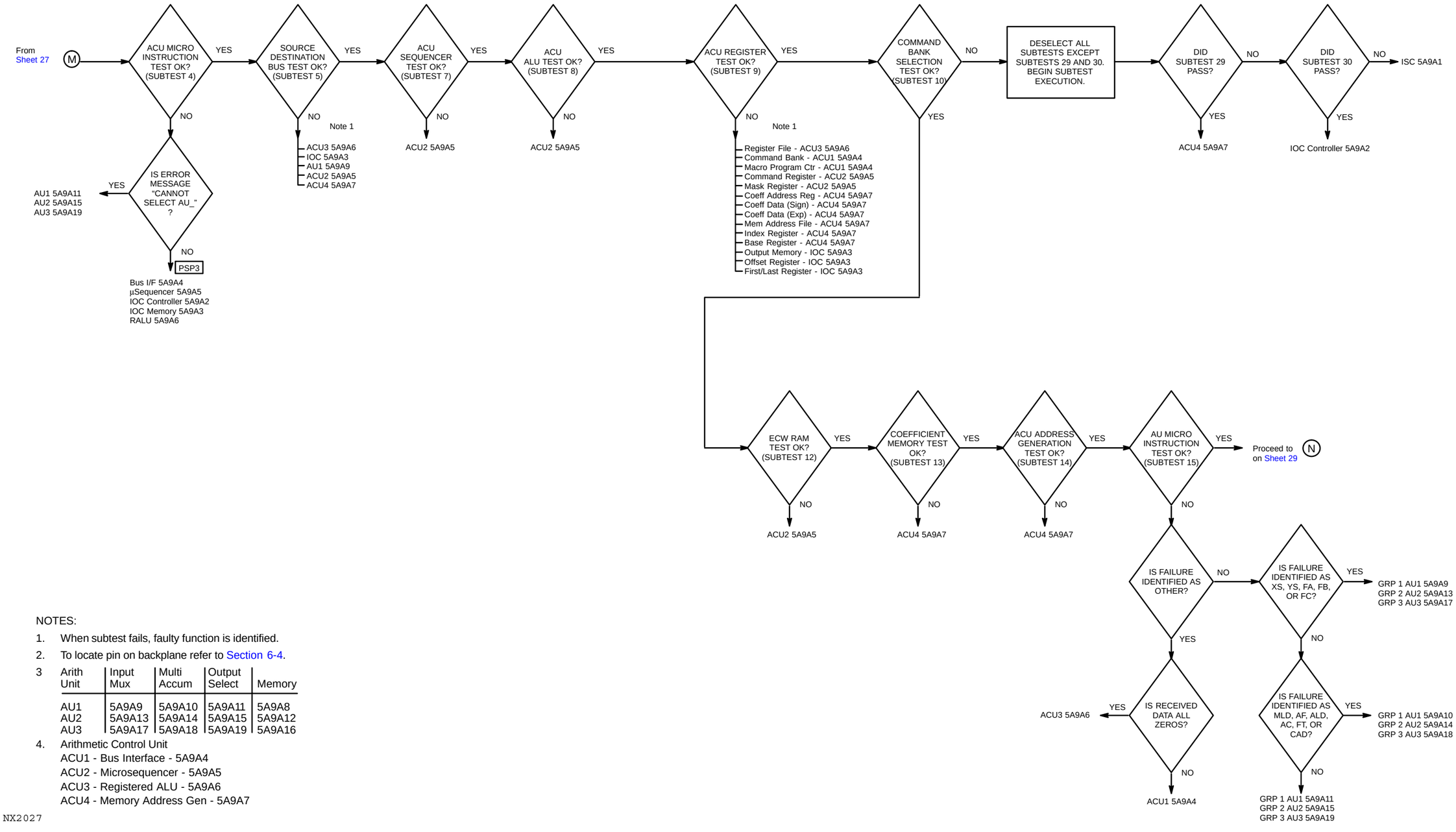


NOTES:

1. When subtest fails, faulty function is identified.
2. To locate pin on backplane refer to Section 6-4.
3. 

| Arith Unit | Input Mux | Multi Accum | Output Select | Memory |
|---|---|---|---|---|
| AU1 | 5A9A9 | 5A9A10 | 5A9A11 | 5A9A8 |
| AU2 | 5A9A13 | 5A9A14 | 5A9A15 | 5A9A12 |
| AU3 | 5A9A17 | 5A9A18 | 5A9A19 | 5A9A16 |

4. Arithmetic Control Unit
   ACU1 - Bus Interface - 5A9A4
   ACU2 - Microsequencer - 5A9A5
   ACU3 - Registered ALU - 5A9A6
   ACU4 - Memory Address Gen - 5A9A7

NX2027

Figure 6-2. RDA Fault Isolation Flowchart (PSP) (Sheet 28 of 57)

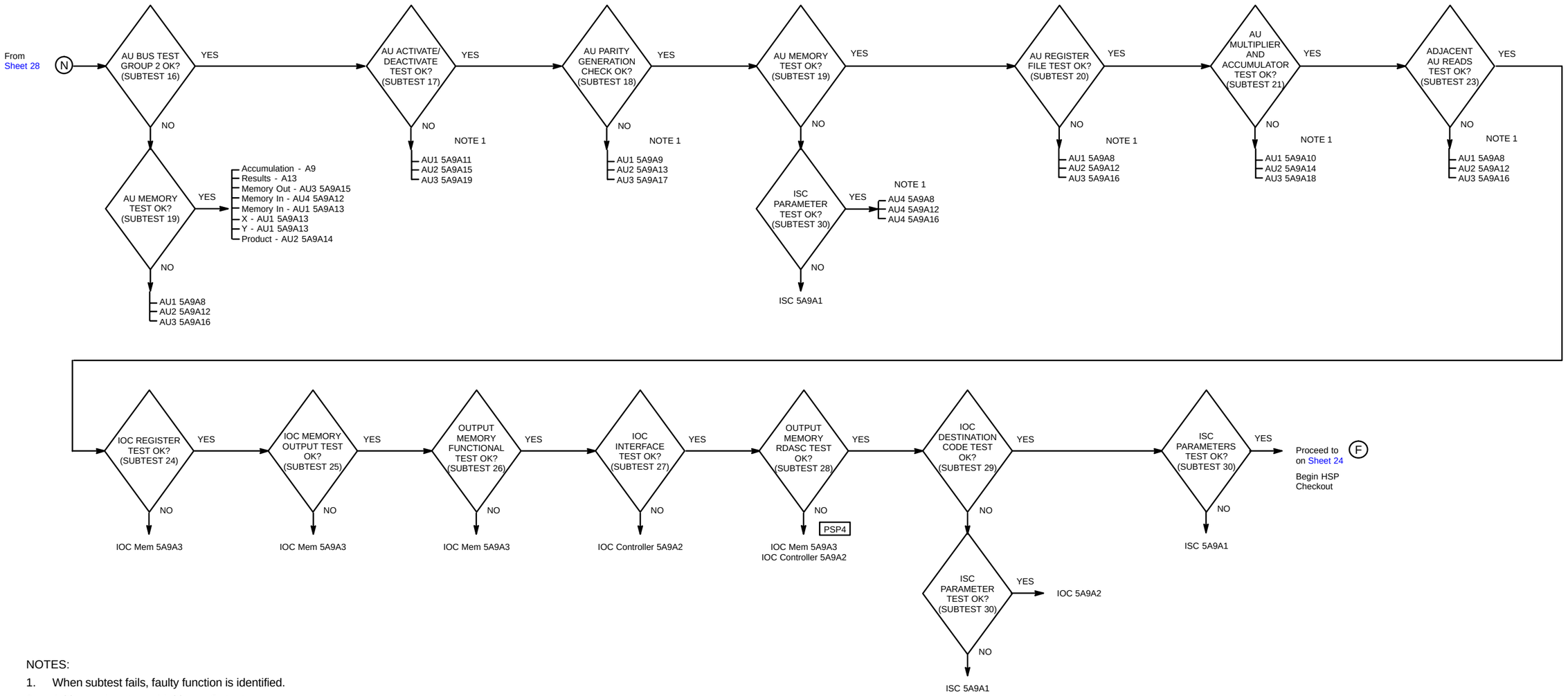


NOTES:

1. When subtest fails, faulty function is identified.
2. 

| Arith Unit | Input Mux | Multi Accum | Output Select | Memory |
|---|---|---|---|---|
| AU1 | 5A9A9 | 5A9A10 | 5A9A11 | 5A9A8 |
| AU2 | 5A9A13 | 5A9A14 | 5A9A15 | 5A9A12 |
| AU3 | 5A9A17 | 5A9A18 | 5A9A19 | 5A9A16 |

3. Arithmetic Control Unit
   ACU1 - Bus Interface - 5A9A4
   ACU2 - Microsequencer - 5A9A5
   ACU3 - Registered ALU - 5A9A6
   ACU4 - Memory Address Gen - 5A9A7

NX2028

Figure 6-2. RDA Fault Isolation Flowchart (PSP)
(Sheet 29 of 57)

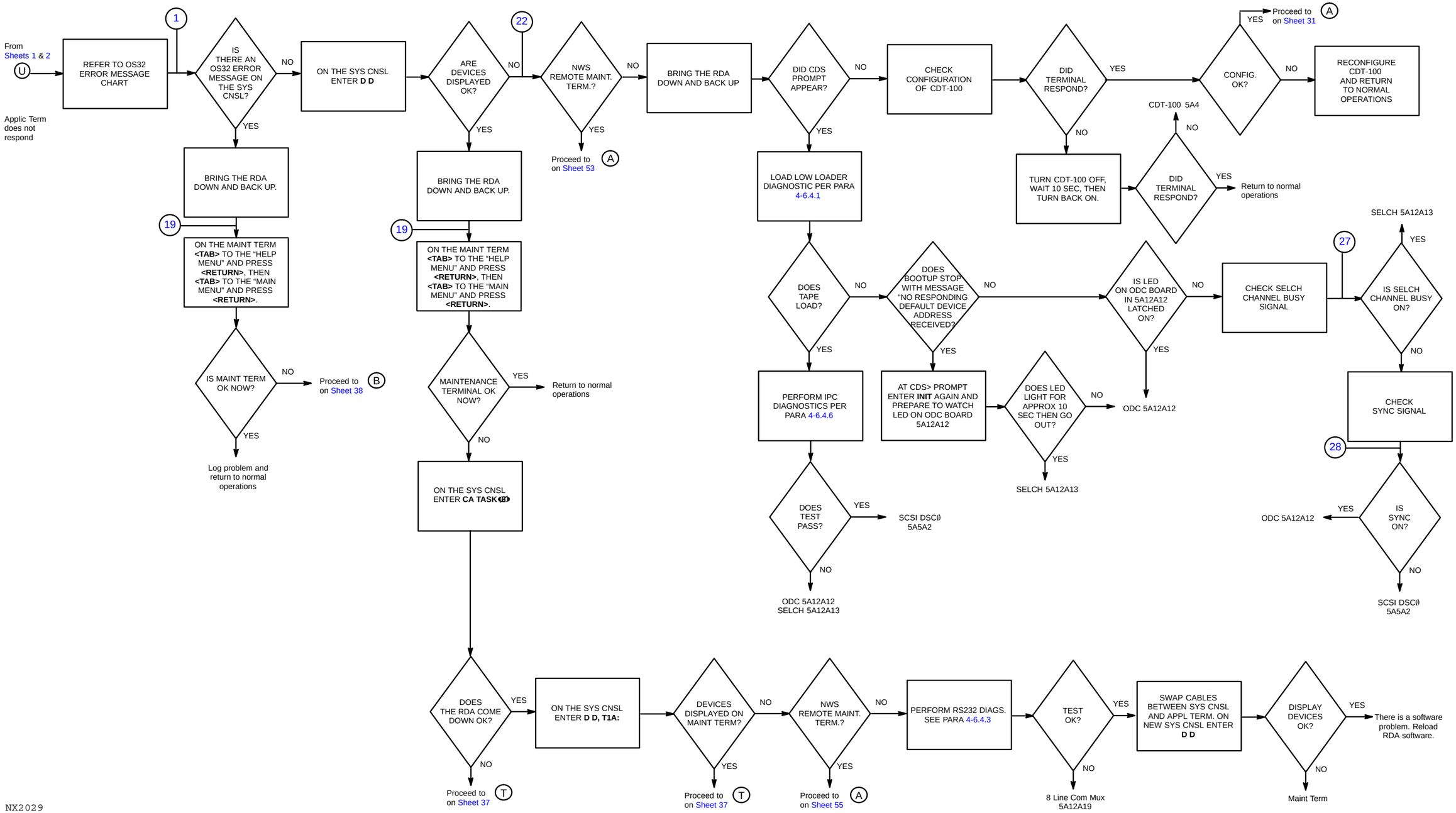


Figure 6-2. RDA Fault Isolation Flowchart (Control) (Sheet 30 of 57)

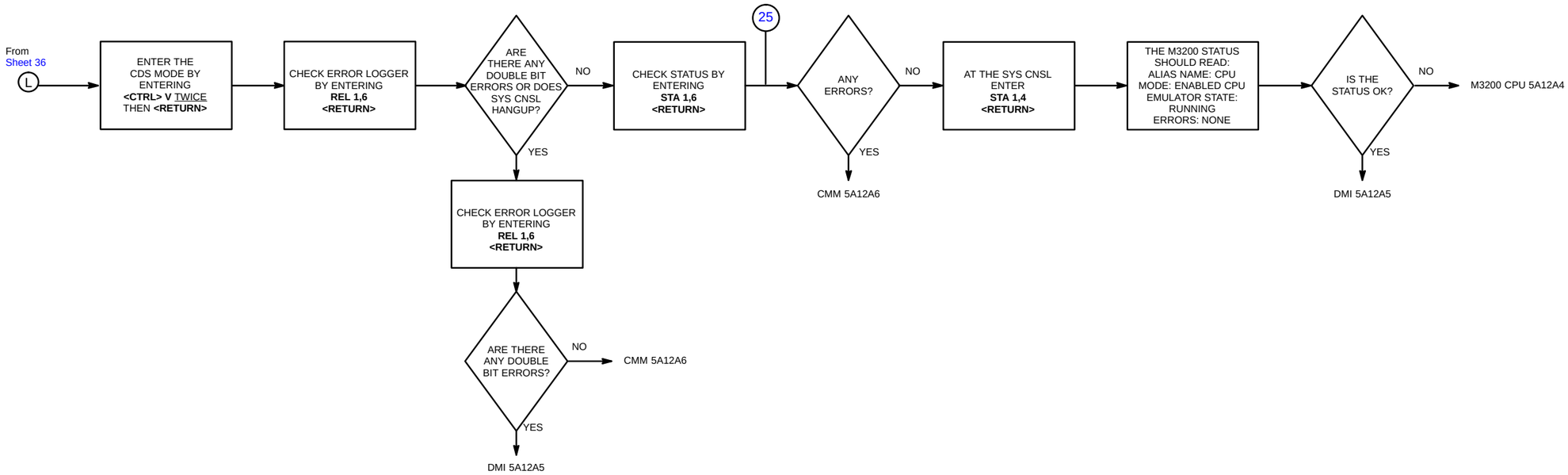


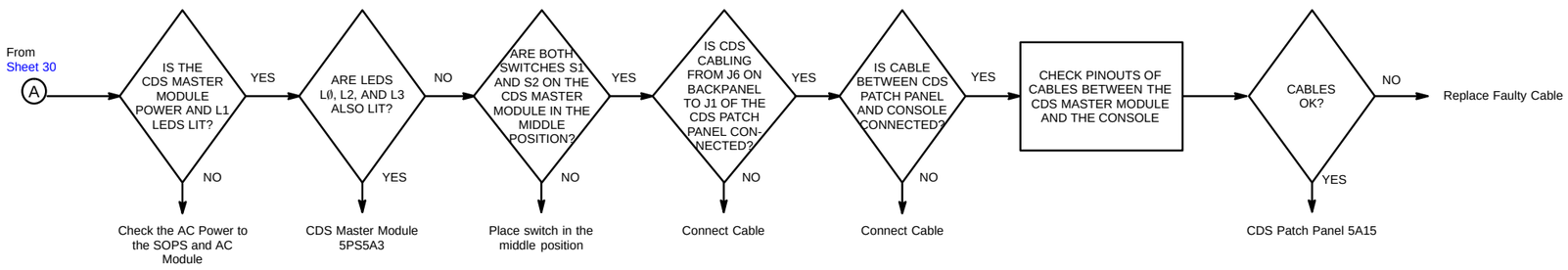


NX2030

Figure 6-2. RDA Fault Isolation Flowchart (Control)
(Sheet 31 of 57)

ALARM MESSAGES

RDA Alarm Present

From Sheets 2 & 3 (F)

| Functional Area | Type | Alarm | What To Do (Step 1) NOTE 2 | What To Do (Step 2) |
|---|---|---|---|---|
| Disk File Access | OC<br>OC<br>OC<br>OC<br>FO<br>OC | Remote VCP File Write Failed<br>Bypass Map File Write Fail<br>Censor Zone File Write Fail<br>Invalid Censor Zone Message Rcv'd<br>RDASC Cal Data File Write Failed<br>State File Write Failed | Resend VCP from RDA<br>Check Adapt Data<br>Check Adapt Data<br>Check Adapt Data<br>Check Calib File<br>Check State File as per Note 40 | Proceed to (B) on Sheet 38<br><br>Examine Error Logger |
| | OC | WDOG Timer Task Paused - Restart Initiated | Reboot RDA | Replace LSU 5A12A20A2 if Problem Persists |
| | OC<br>OC | Init Seq Timeout - Restart Initiated<br>Control Seq Timeout - Restart Initiated | | |

Alarm Messages Continued on Sheet 34

NOTES:

1. Alarm types are defined in paragraph 6-3.4.1.
2. Occurence alarms may not always lend themselves to solution by diagnostic testing. If indicated diagnostic procedure passes after repeated attempts, replace LRUs indicated.

NX2031

Figure 6-2. RDA Fault Isolation Flowchart (Control)
(Sheet 32 of 57)

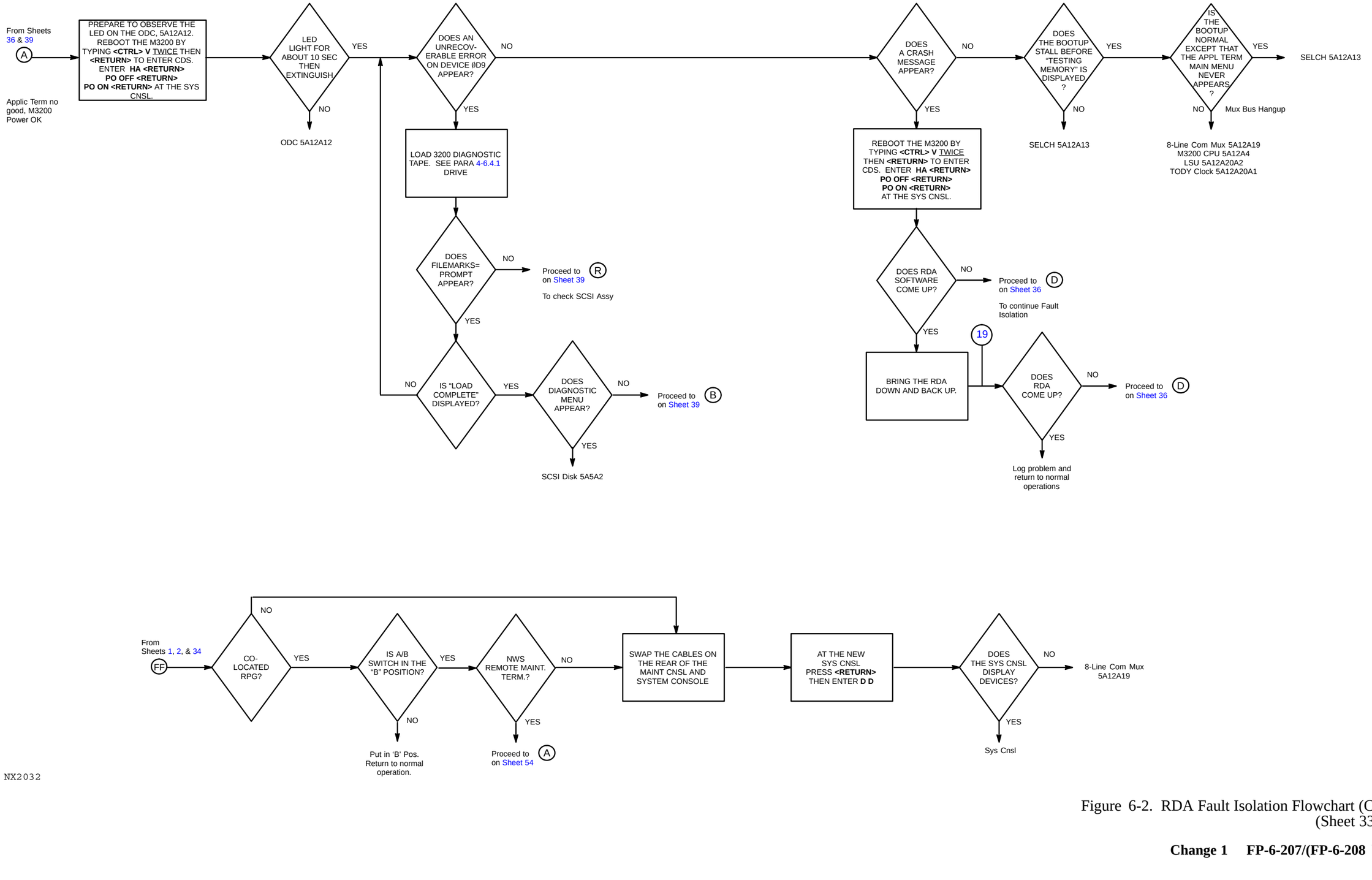


NX2032

Figure 6-2. RDA Fault Isolation Flowchart (Control) (Sheet 33 of 57)

ALARM MESSAGES (Continued from Sheet 32)

| Functional Area | Type | Alarm | What To Do (Step 1) NOTE 2 | What To Do (Step 2) |
|---|---|---|---|---|
| DAU Initialization | FO<br>ED<br>ED<br>OC<br>ED | Send DAU Command Timed Out<br>DAU Initialization Error<br>XMTR-DAU Interface Failure<br>Mult DAU Cmnd Touts- Restart Init.<br>DAU UART Failure | Proceed to (P) on Sheet 51<br><br>To Perform DAU Diagnostics | 5A3A1, 5A12A19<br>5A3A1, 5A12A19<br><br>5A3A1, 5A12A19<br>5A3A2 |
| Maintenance Console (MMI) Initilization | ED | MMI Initialization Error | Proceed to (FF) on Sheet 33 | 5A4, 5A12A19 |
| Pedestal Initialization | ED<br>FO<br>FO | Pedestal Initialization Error<br>Pedestal Self Test 1 Error<br>Pedestal Self Test 2 Error | Proceed to (B) on Sheet 14<br>To perform Ant Ped Diagnostics | 5A6A2, 5A12A19<br>5A6A2, 5A12A19<br>Replace LRU Indicated in Ped Diagnostics |
| SPS Initilization | ED<br>FO<br>FO<br>FO<br>FO<br>FO<br>FO | SPS Initialization Error<br>SPS Hardware Init Selection Error<br>SPS DIM Loop Test Error<br>SPS SMI Loop Test Error<br>SPS Microcode/ECW Load Error<br>SPS RTD Loop Test Error<br>SPS HSP Loop Test Error | Proceed to (J) on Sheet 27<br><br>To perform Signal Processor Diagnostics | 5A9A2<br>5A9A2, 5A12A19<br>5A9A5<br><br>5A10A2 |
| RPG Interface Message Processing | OC<br>OC<br>OC | Invalid Remote VCP Received<br>Remote VCP Not Downloaded<br>Invalid RPG Command Rcvd | Recheck Command, Resend<br><br>Recheck Command, Resend from RPG | <br><br>Proceed to (B) on Sheet 38 |
| Device Status Reporting | FO<br>OC | MMI I/O Status Error<br>MMI Task Paused- Restart Initiated | Check CDT-100 Config, Recycle Power<br>Check CDT-100 Config, Recycle Power | 5A4<br>5A4 |
| | OC<br>FO<br>OC<br>FO | DAU Task Paused- Restart Initiated<br>DAU I/O Status Error<br>Mult DAU I/O Error-RDA Forced to Stby<br>DAU Status Read Timed Out | Proceed to (P) on Sheet 51 | 5A3A1, 5A12A19<br>5A3A1, 5A12A19<br>5A3A1, 5A12A19<br>5A3A1, 5A12A19 |
| | OC<br>FO<br>OC | SPS Task Paused - Restart Initiated<br>SPS I/O Status Error<br>Mult SPS I/O Error - RDA Forced to Stby | Proceed to (J) on Sheet 27 | |
| | OC<br>FO<br>OC | Ped Task Paused- Restart Initiated<br>Pedestal I/O Status Error<br>Mult Ped I/O Error - RDA Forced to Stby | Proceed to (B) on Sheet 14 | 5A6A2, 5A12A19<br>5A6A2, 5A12A19<br>5A6A2, 5A12A19 |
| Prime Power Control | OC | Recommend Switch to Utility Power | Alarm Indicates RDA is on Generator Power | Switch to Utility Power When Appropriate |
| Redundant Channel | FO<br>OC<br>OC<br>OC<br>OC | Redun Chan Interface I/O Status Error<br>Interprocessor Stby Command Rejected<br>No Interprocessor Command Response<br>Unable to Cmd Oper - Redun Chan On Line<br>Redun Chan Tsk Paused - Restart Initiated | | |
| Archive II | OC<br>OC<br>OC<br>OC<br>OC<br>OC | Archive II Task Paused- Restart Initiated<br>Archive II I/O Error<br>Archive II Allocation/Media Full Error<br>Archive II File Management Error<br>Archive II Load Error<br>Archive II Playback Volume Scan Not Found | Proceed to (START) on Sheet 1 of FO7-5, NWS EHB 6-560 | |

NOTES:

1. Alarm types are defined in paragraph 6-3.4.1.
2. Occurence alarms may not always lend themselves to solution by diagnostic testing. If indicated diagnostic procedure passes after repeated attempts, replace LRUs indicated.

NX2033

Figure 6-2. RDA Fault Isolation Flowchart (RDA Inop Control) (Sheet 34 of 57)

RDA Alarm Present

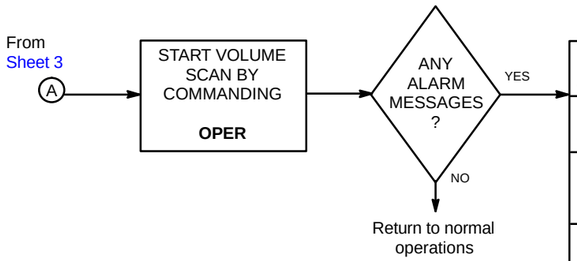


| Functional Area | Type | Alarm | When Tested | What To Do |
|---|---|---|---|---|
| Elevation Cut Status Analysis | FO<br>FO | PRT 1 Interval Error<br>PRT 2 Interval Error | 1/Cut<br>1/Cut | Proceed to (J) on Sheet 27 |
| Radial Processing | OC<br>FO<br>OC | Radial Data Lost<br>Radial Time Interval Error<br>Excessive Radials in a Cut | <br>1/Cut<br>1/Cut | Proceed to (J) on Sheet 27 |
| Signal Processing | FO<br>FO<br>FO<br>FO<br>FO<br>FO | SPS Read Timing Error<br>SPS Write Timing Error<br>AU Ø Parity Error<br>AU 1 Parity Error<br>AU 2 Parity Error<br>Clutter Filter Parity Error | 1/Cut<br>1/Cut<br>1/Cut<br>1/Cut<br>1/Cut<br>1/Cut | Proceed to (J) on Sheet 27 |
| SPS Initialization | FO<br>FO<br>FO<br><br>FO<br>FO<br>FO<br>FO | HWSP End Around Test Error<br>SPS Memory Clear Error<br>SPS Micro/ECW Data File Read Failed<br>SPS Microcode/ECW Verify Error<br>SPS Coefficient RAM Load Error<br>SPS AU Ø RAM Load Error<br>SPS Clock/Micro P Set Error | | Proceed to (J) on Sheet 27 |
| Wideband | OC<br>OC<br>OC<br><br>FO | RPG Loop Test Timed Out<br>RPG Loop Test Verification Error<br>Wideband Task Paused - Restart Initiated<br>Send Wideband Status Timed Out | | Proceed to NWS EHB 6-545 Figure 6-2 Sheet 1 to Fault Isolate |
| User Link | FO<br>FO | User Loop Test Timed Out<br>User Loop Test Verification Error | | Proceed to NWS EHB 6-545 Figure 6-2 Sheet 1 to Fault Isolate |

NOTE:

1. Alarm types are defined in paragraph 6-3.4.1.

NX2034

Figure 6-2. RDA Fault Isolation Flowchart (Control)
(Sheet 35 of 57)

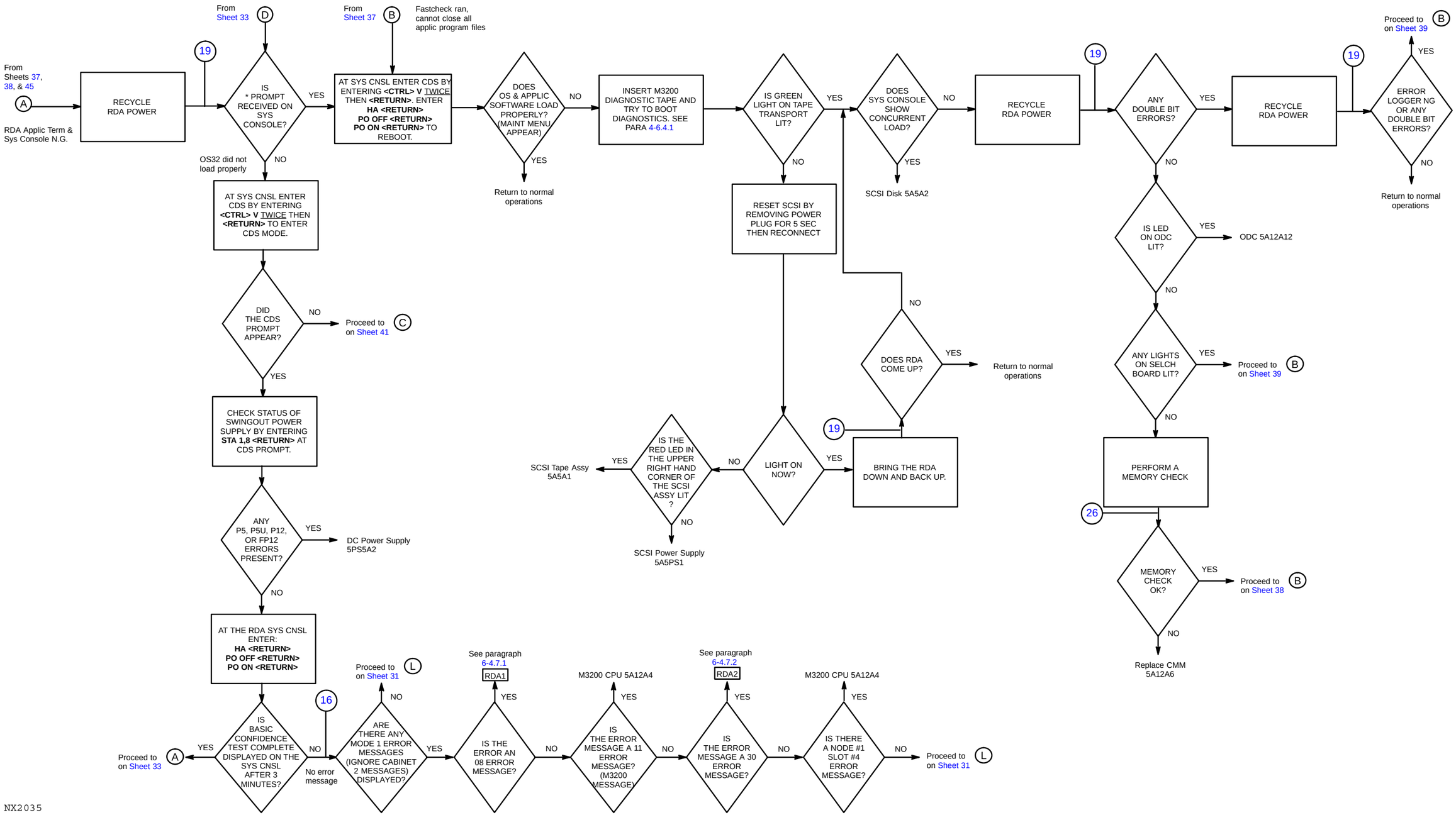


Figure 6-2. RDA Fault Isolation Flowchart (RDASC) (Sheet 36 of 57)

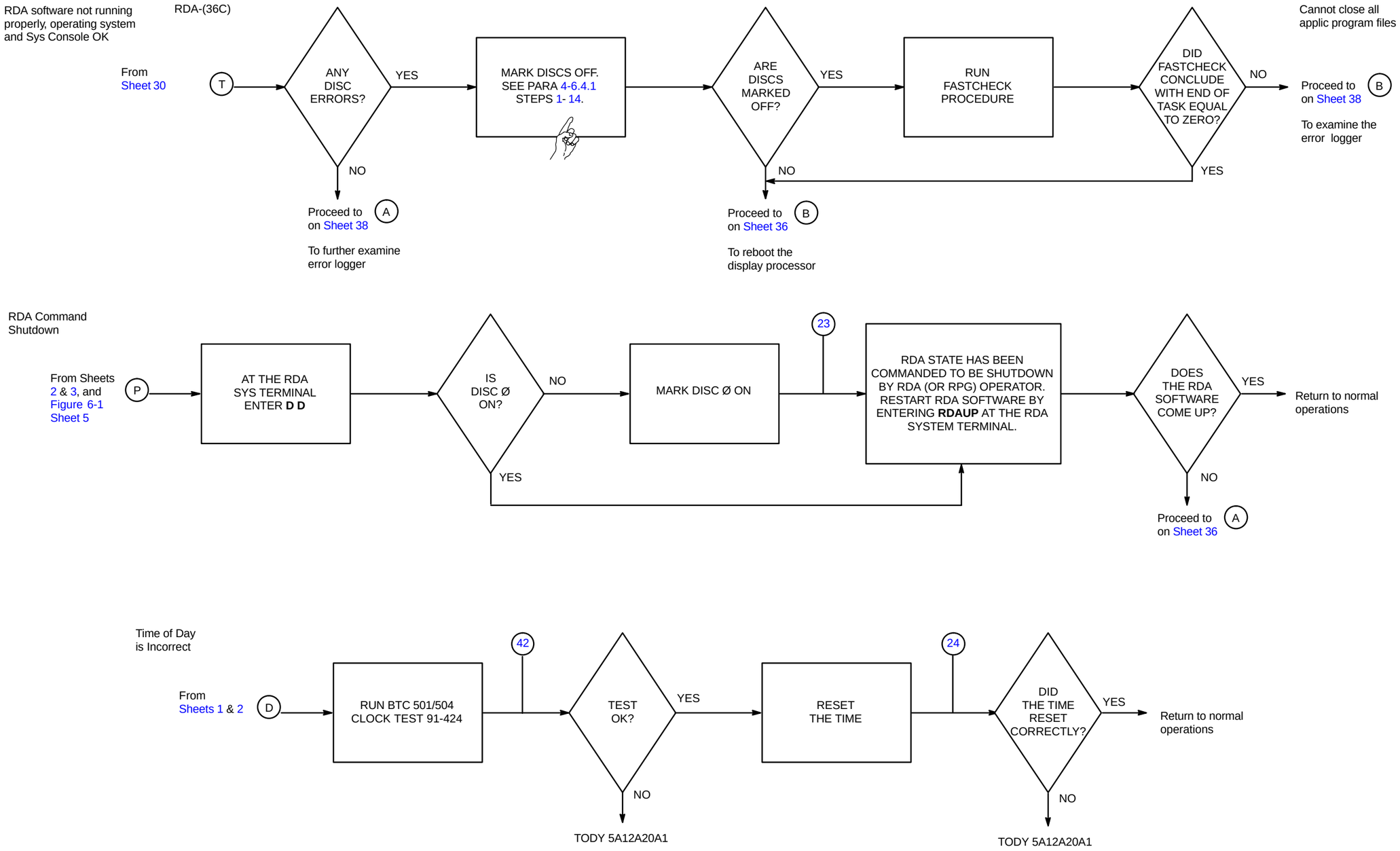


NX2036

Figure 6-2. RDA Fault Isolation Flowchart (RDASC M3200) (Sheet 37 of 57)

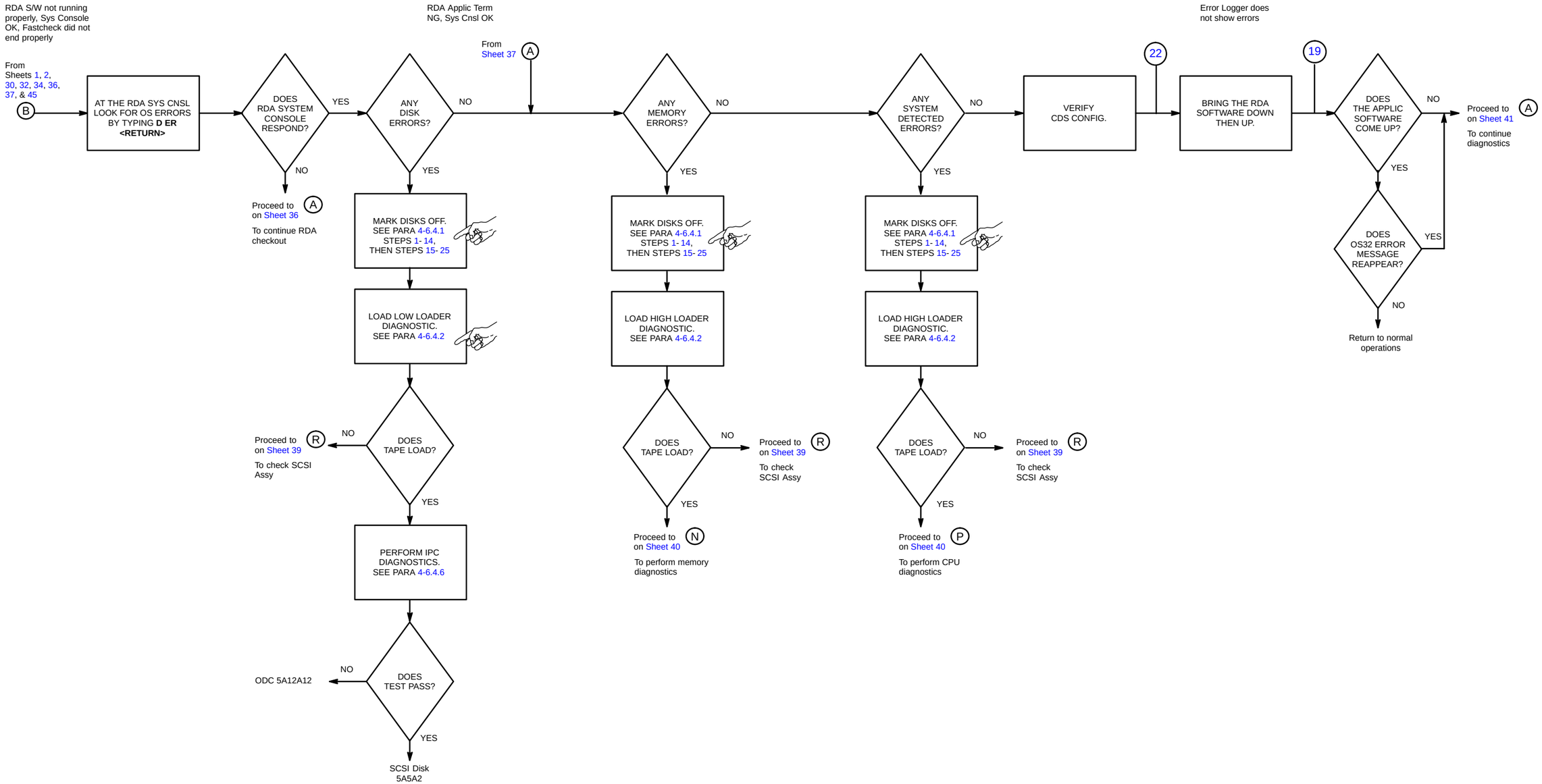


NX2037

Figure 6-2. RDA Fault Isolation Flowchart (RDASC M3200) (Sheet 38 of 57)

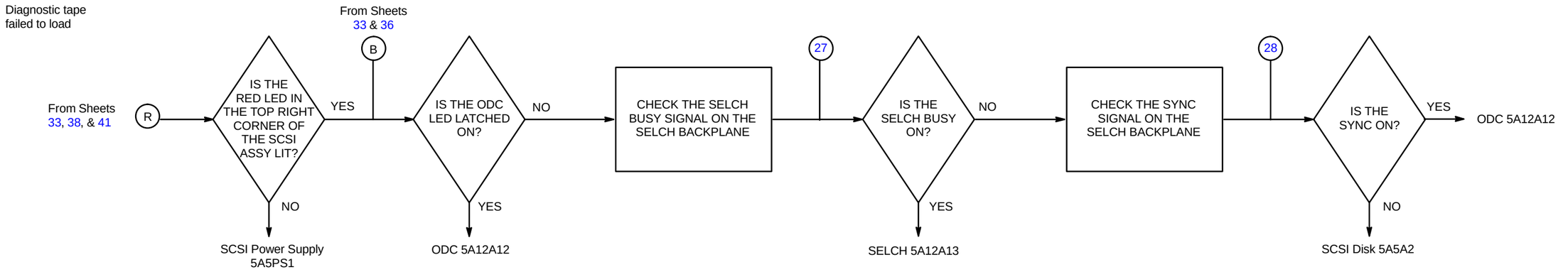


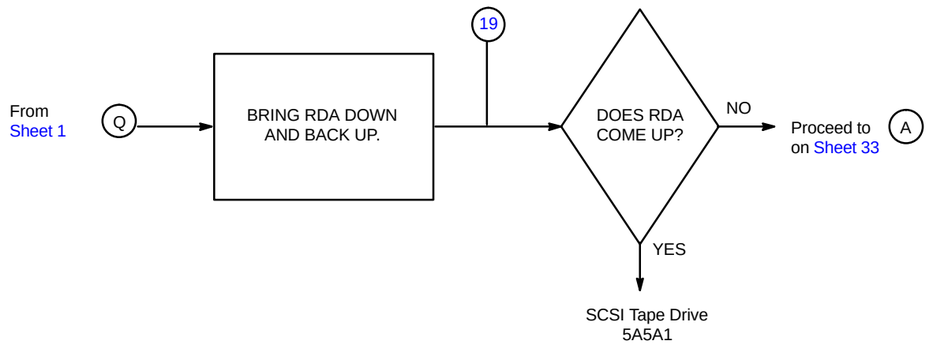


NX2038

Figure 6-2. RDA Fault Isolation Flowchart (RDASC M3200) (Sheet 39 of 57)

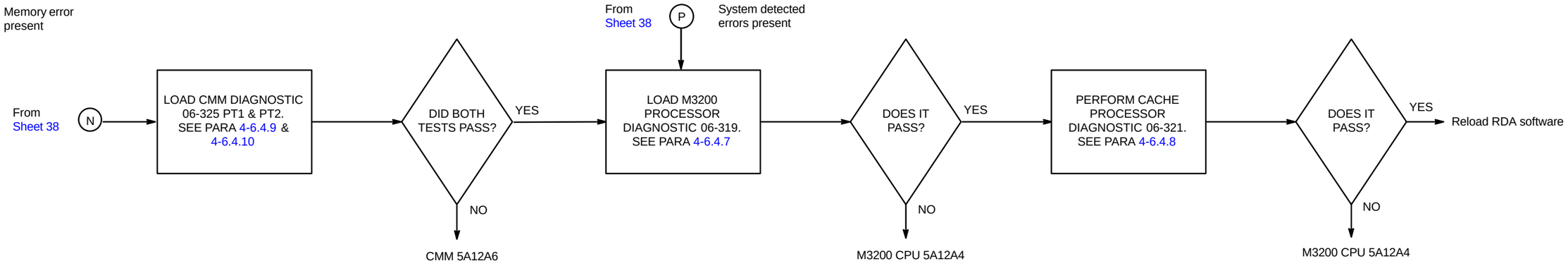


NX2039

Figure 6-2. RDA Fault Isolation Flowchart (RDASC M3200)
(Sheet 40 of 57)

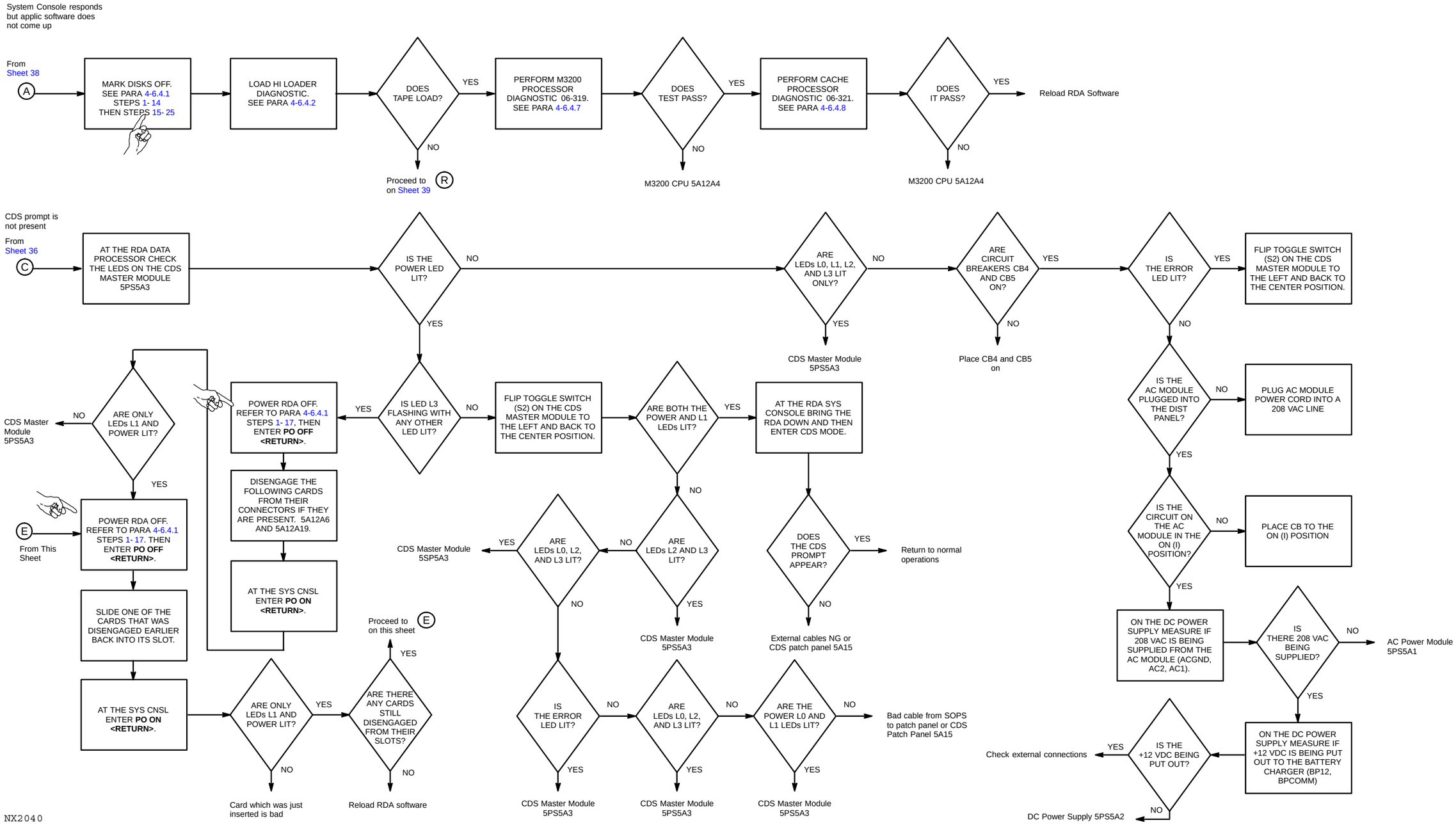


Figure 6-2. RDA Fault Isolation Flowchart (RDASC M3200) (Sheet 41 of 57)

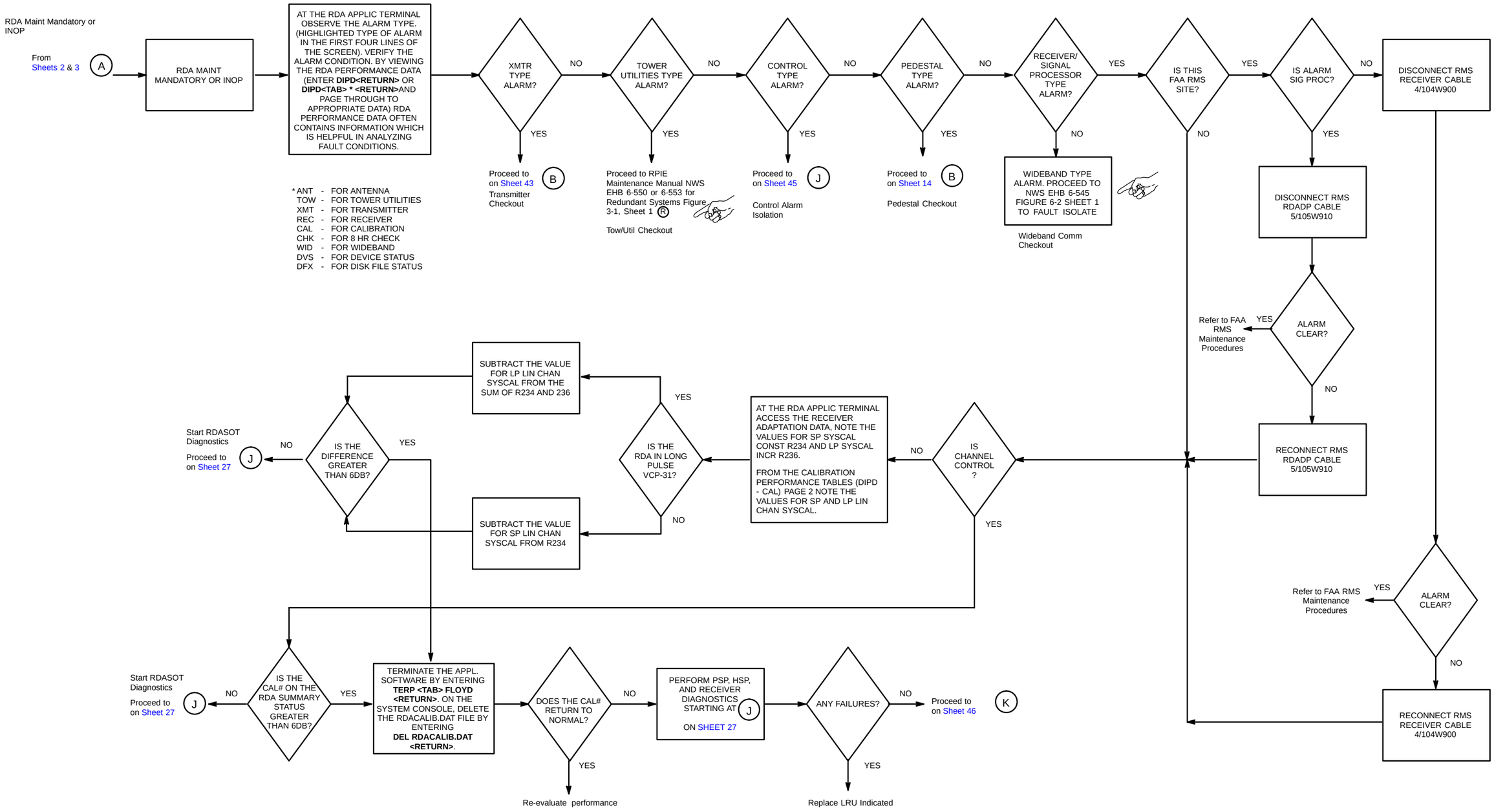


NX2041

Figure 6-2. RDA Fault Isolation Flowchart (Maintenance Mandatory) (Sheet 42 of 57)

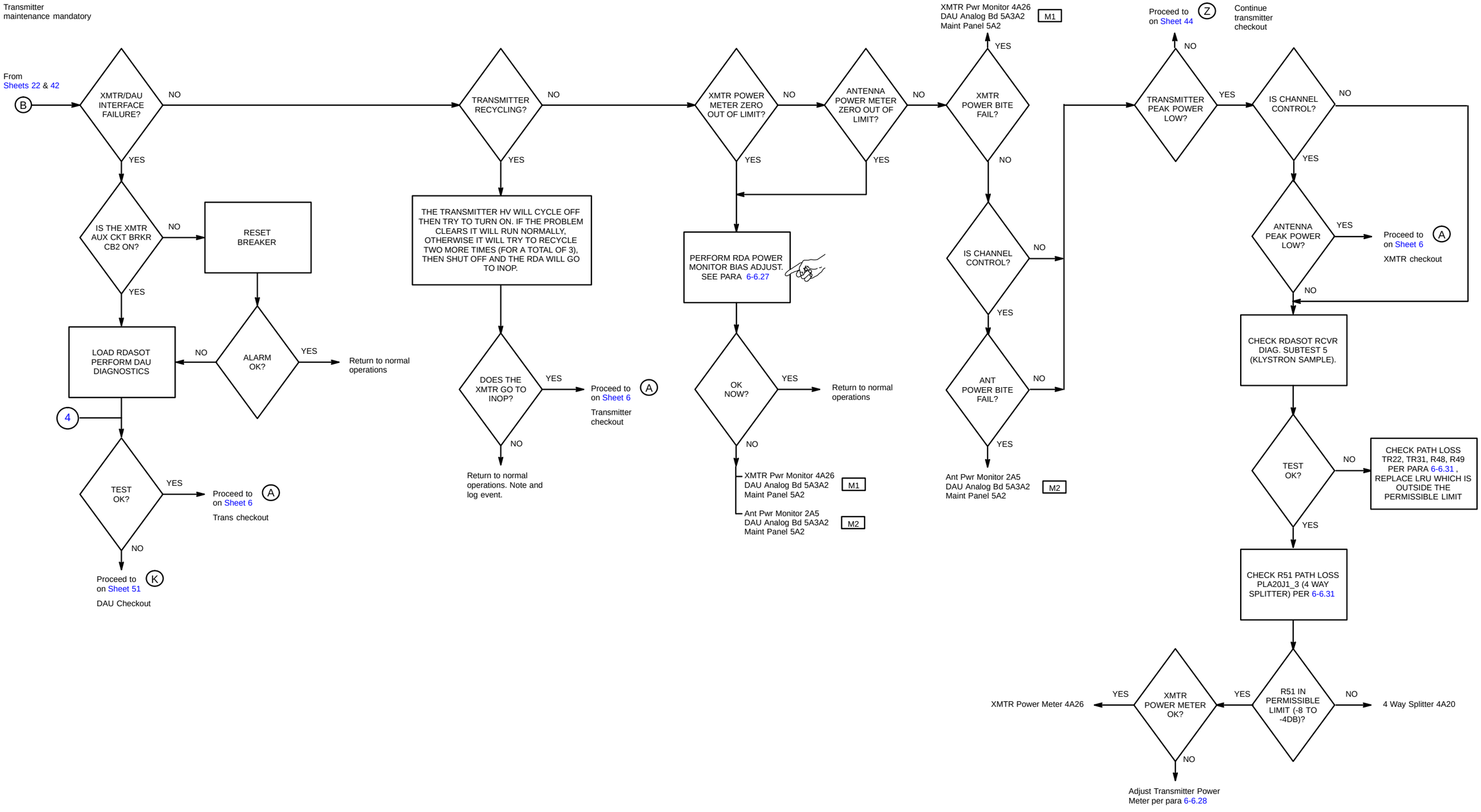


NX2042

Figure 6-2. RDA Fault Isolation Flowchart (Maint Mand - Transmitter) (Sheet 43 of 57)

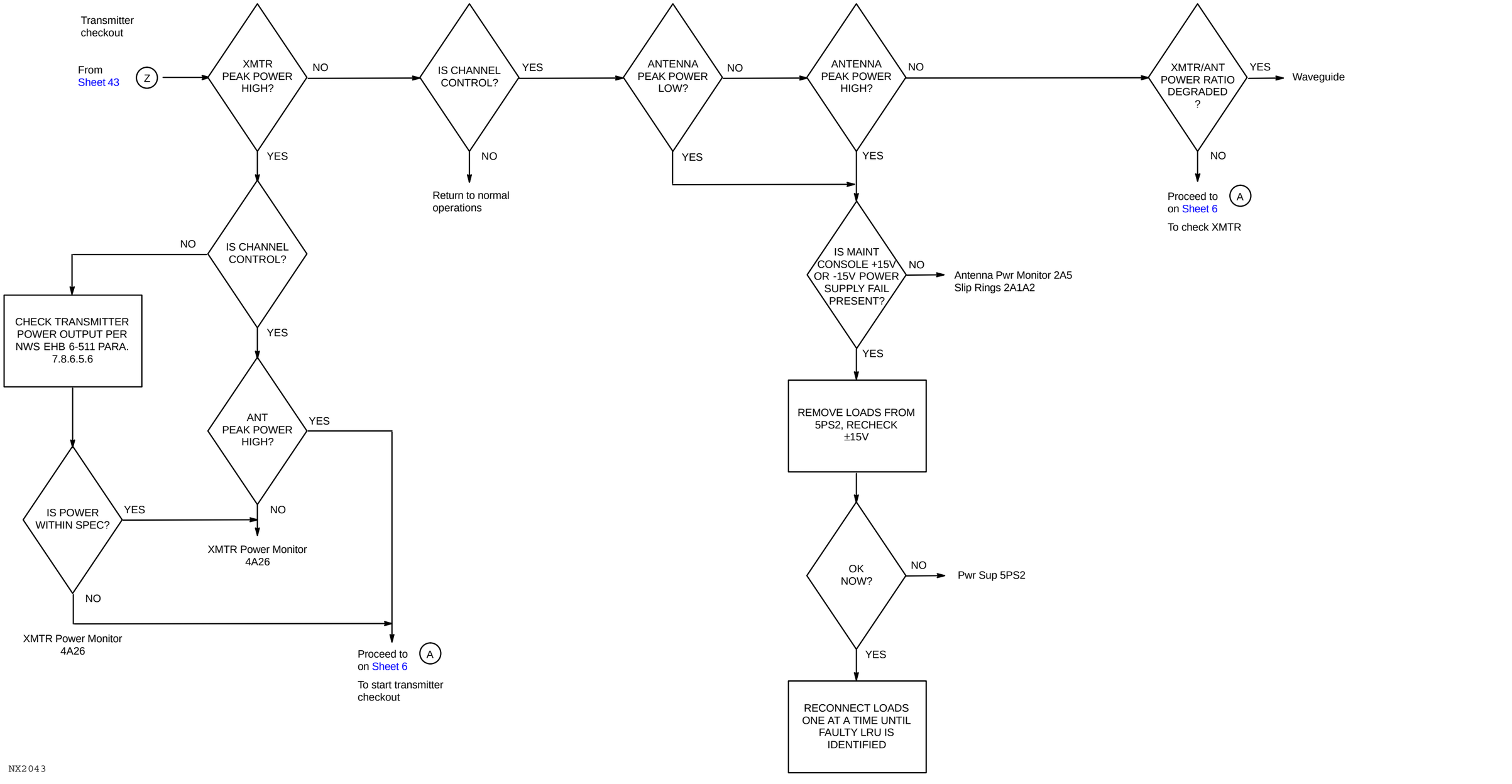


Figure 6-2. RDA Fault Isolation Flowchart (Maint Mand - Transmitter) (Sheet 44 of 57)

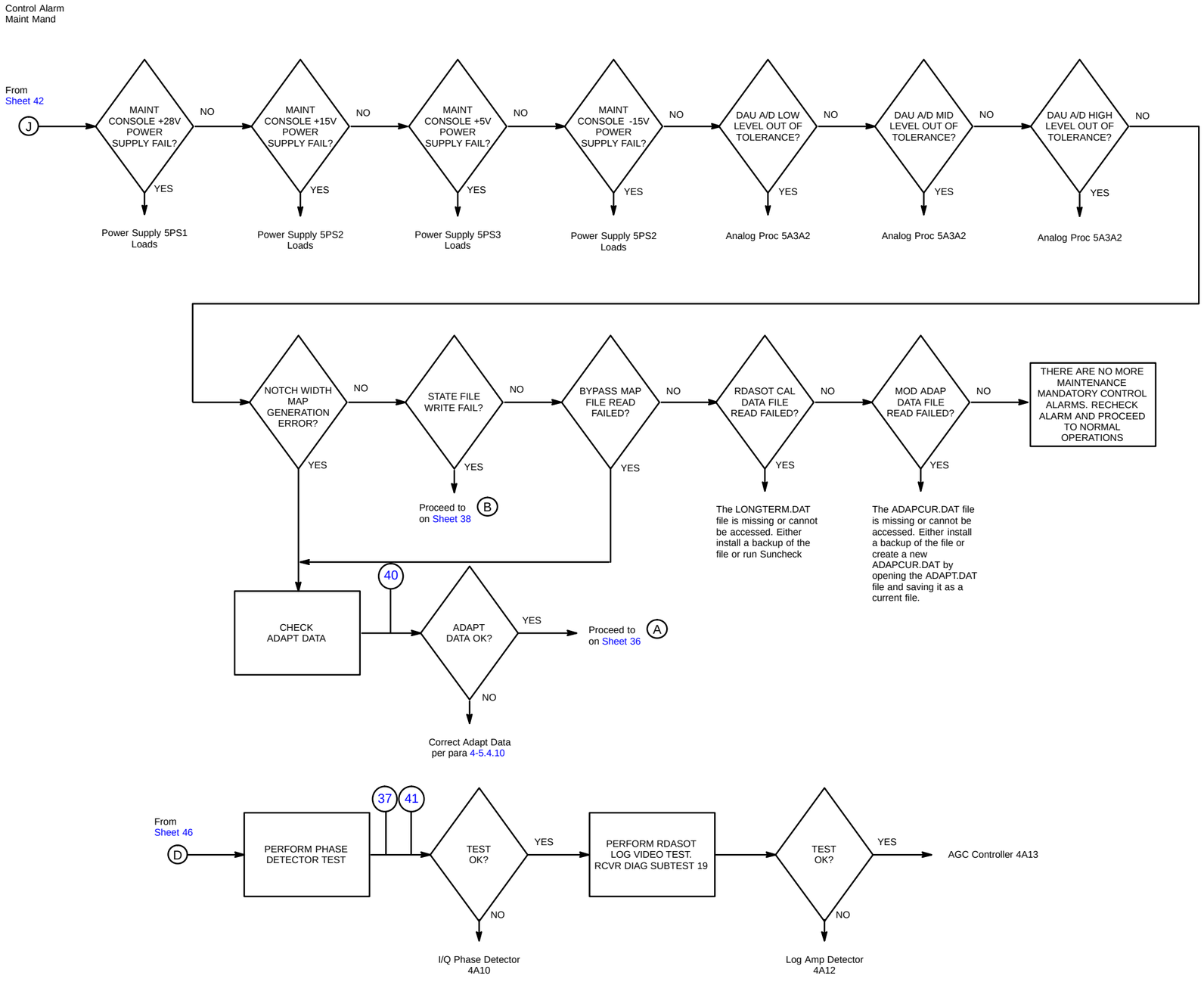


NX2044

Figure 6-2. RDA Fault Isolation Flowchart (Maint Mand - Control) (Sheet 45 of 57)

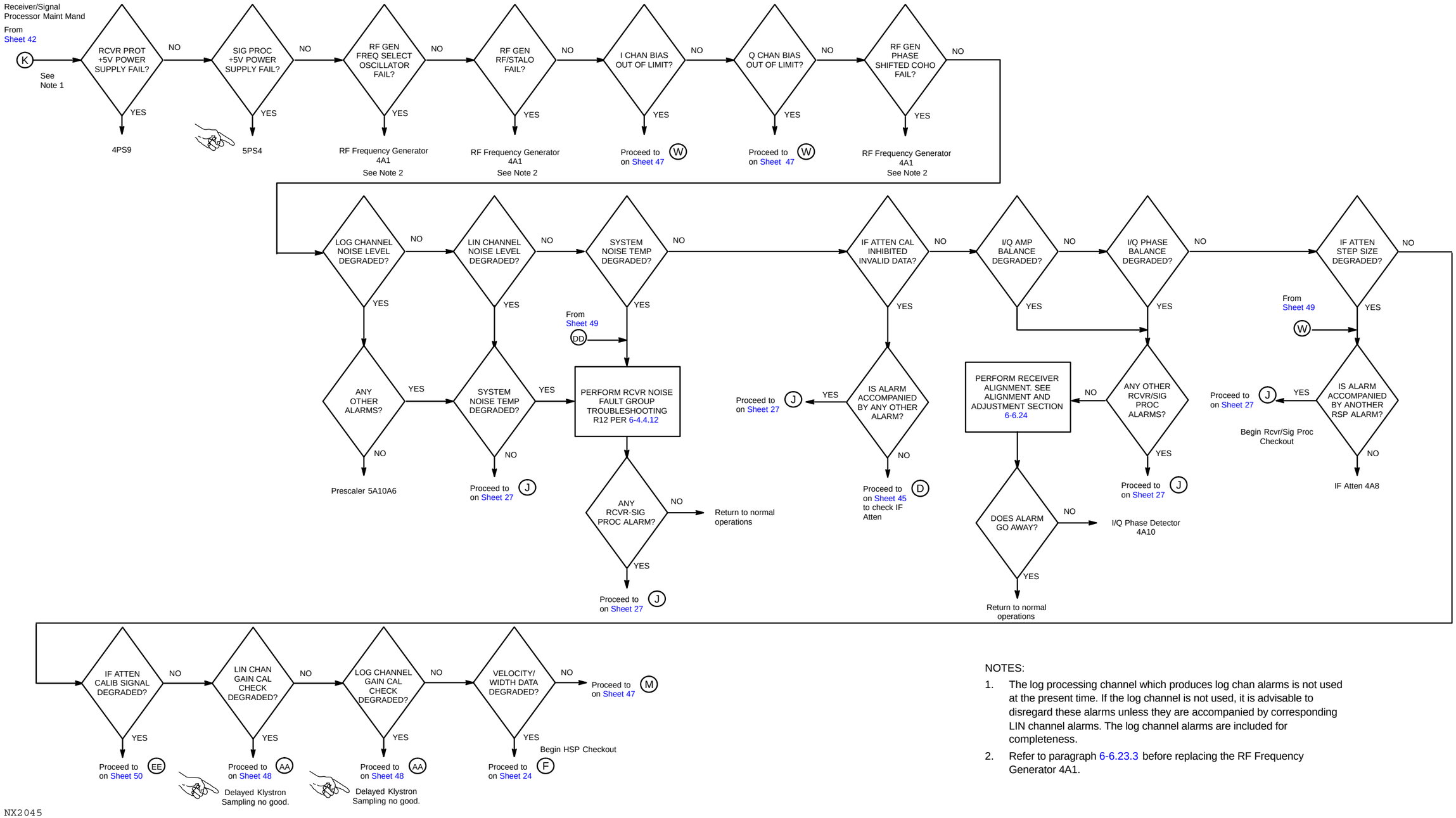


NOTES:

1. The log processing channel which produces log chan alarms is not used at the present time. If the log channel is not used, it is advisable to disregard these alarms unless they are accompanied by corresponding LIN channel alarms. The log channel alarms are included for completeness.
2. Refer to paragraph 6-6.23.3 before replacing the RF Frequency Generator 4A1.

Figure 6-2. RDA Fault Isolation Flowchart (Maint Mand - RSP) (Sheet 46 of 57)

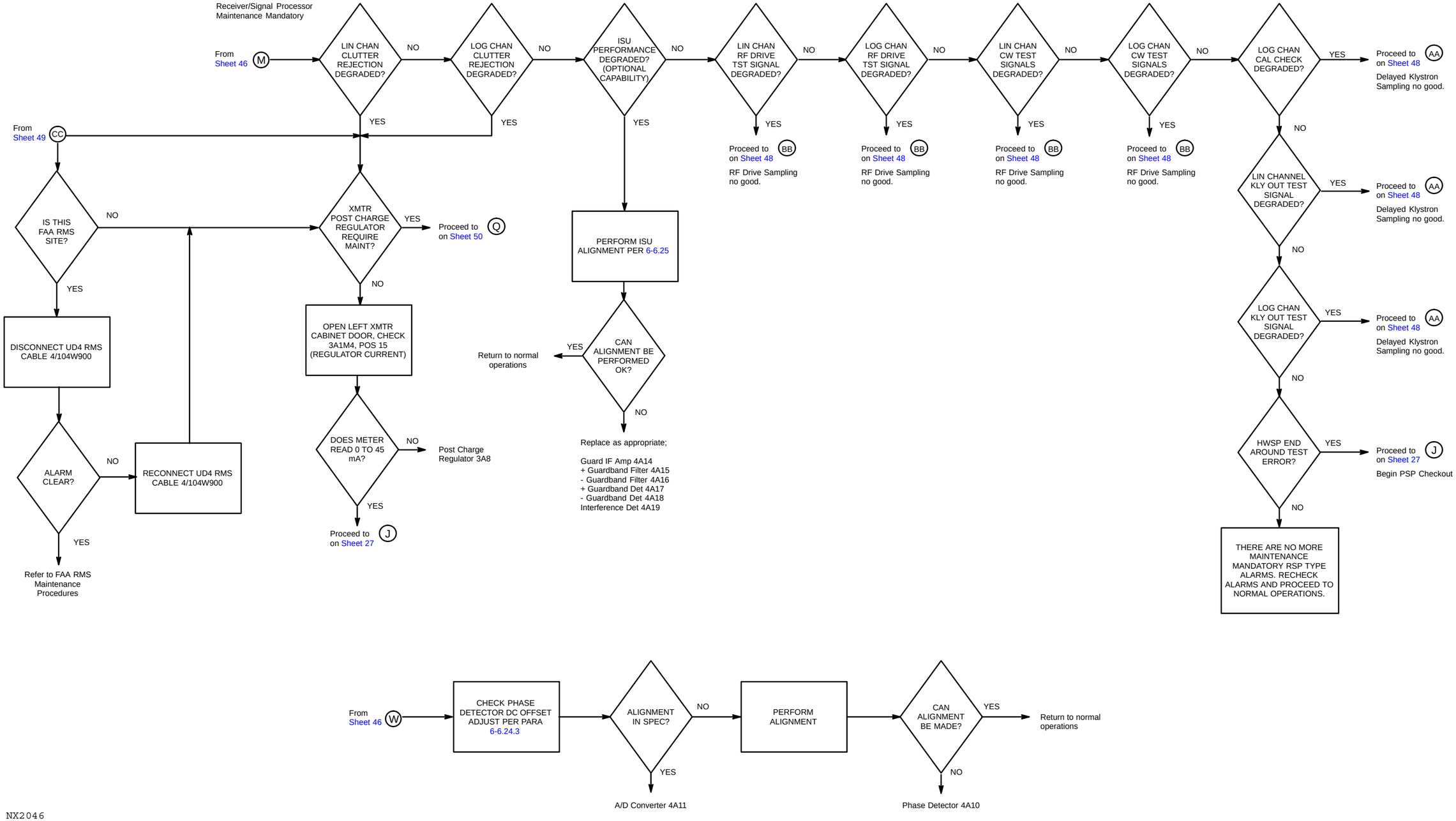


Figure 6-2. RDA Fault Isolation Flowchart (Maint Mand - RSP) (Sheet 47 of 57)

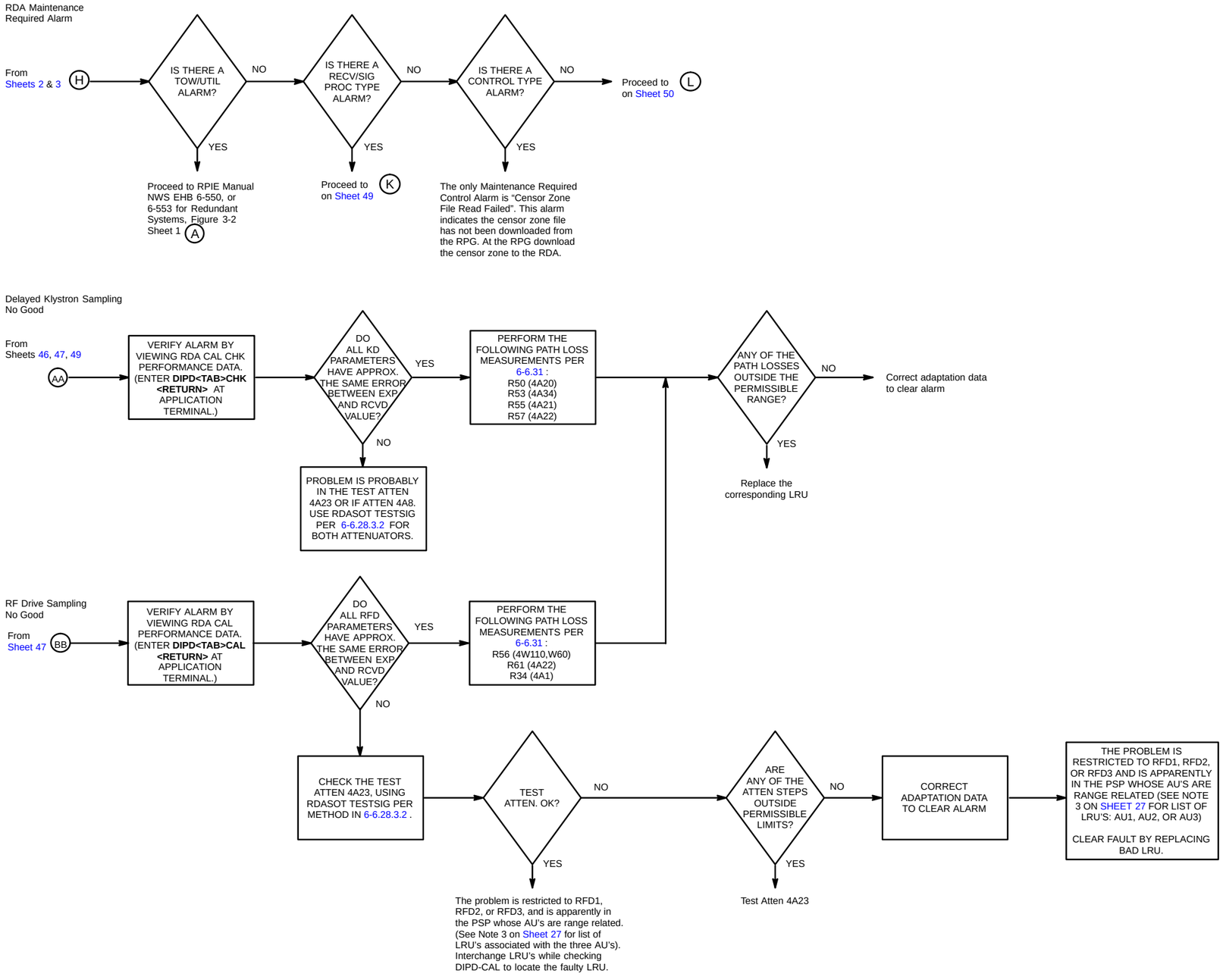


NX2047

Figure 6-2. RDA Fault Isolation Flowchart (Maint Required) (Sheet 48 of 57)

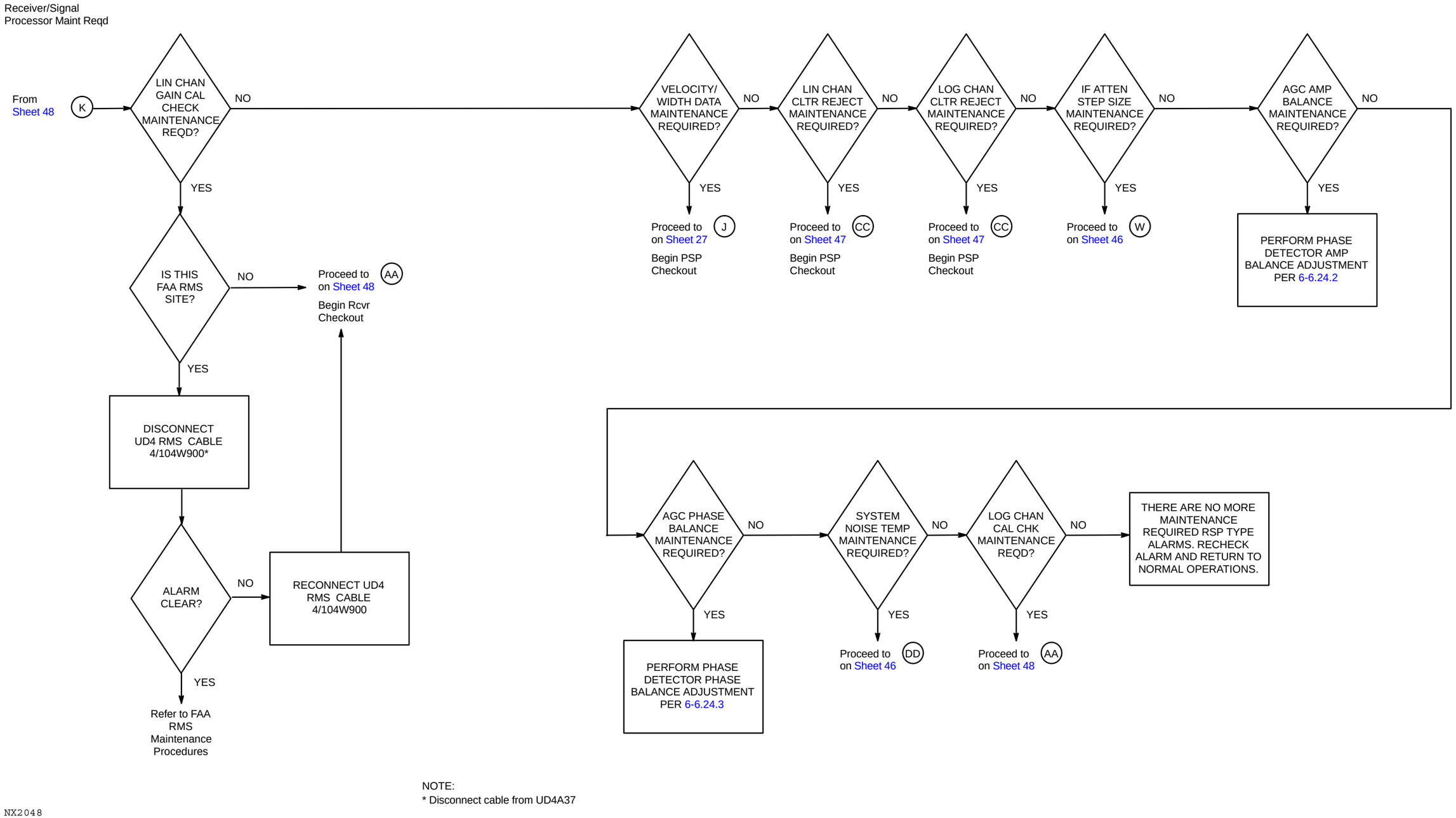


Figure 6-2. RDA Fault Isolation Flowchart (Maint Required - RSP) (Sheet 49 of 57)

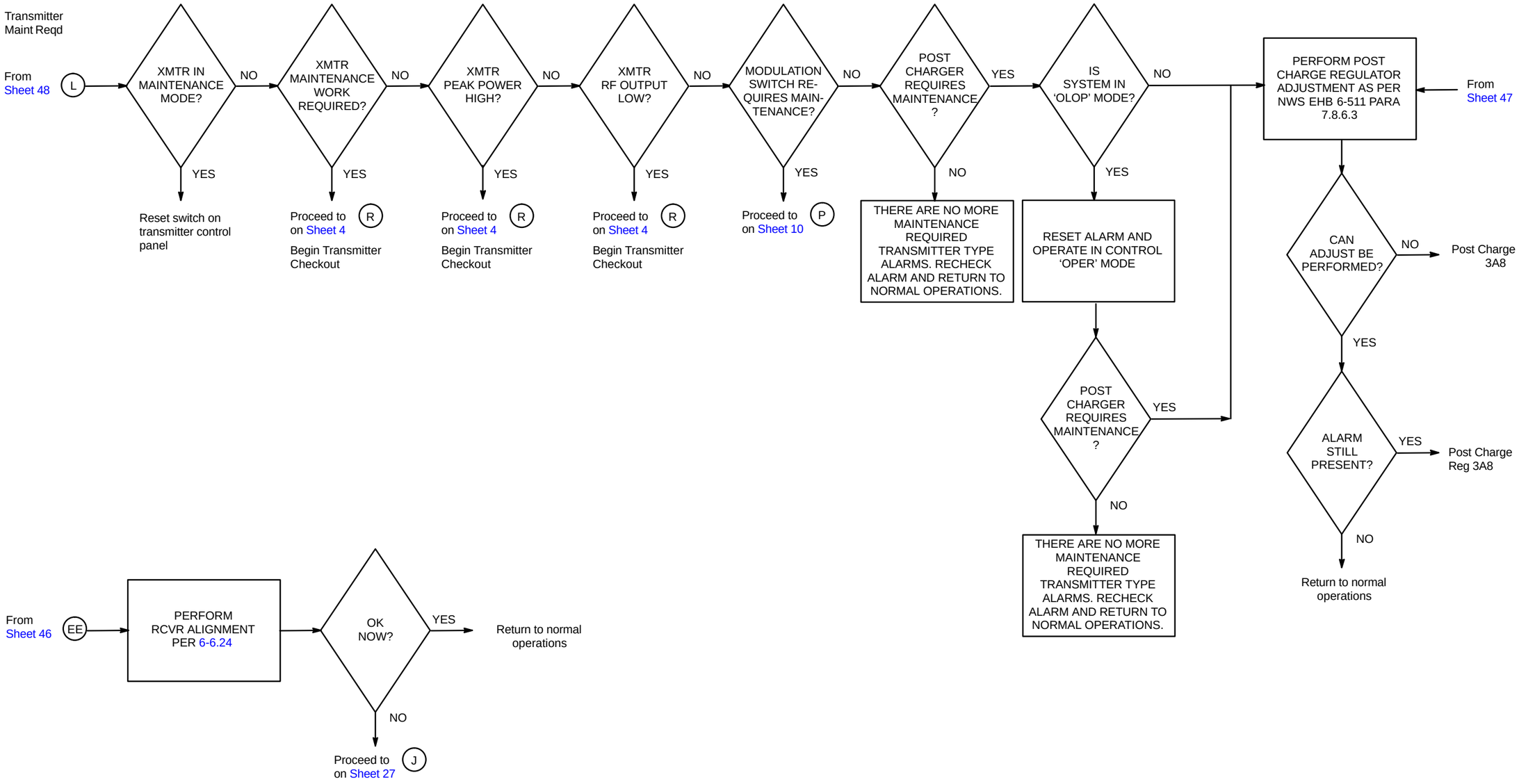


Figure 6-2. RDA Fault Isolation Flowchart (Maint Required - RSP) (Sheet 50 of 57)

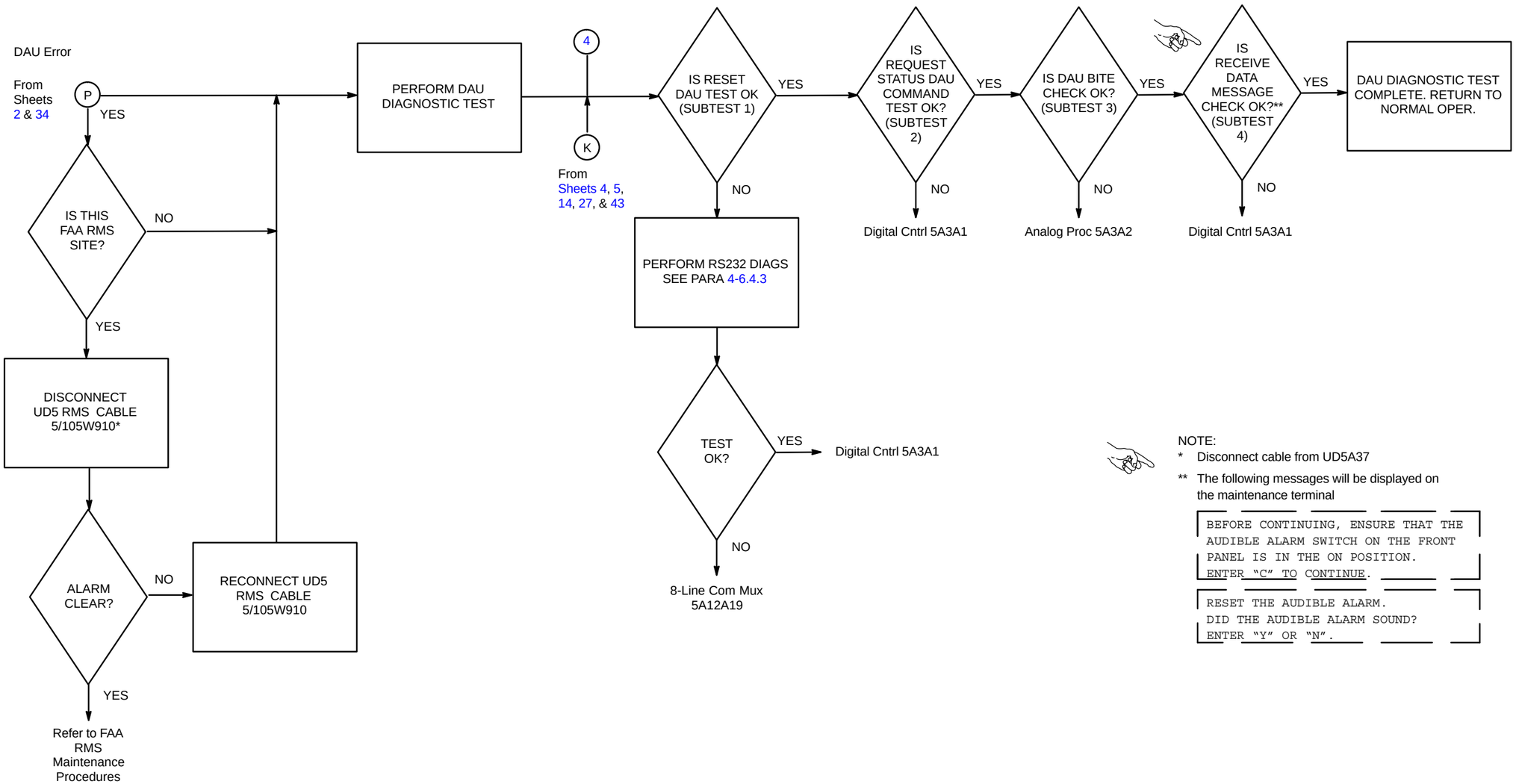


Figure 6-2. RDA Fault Isolation Flowchart (DAU) (Sheet 51 of 57)

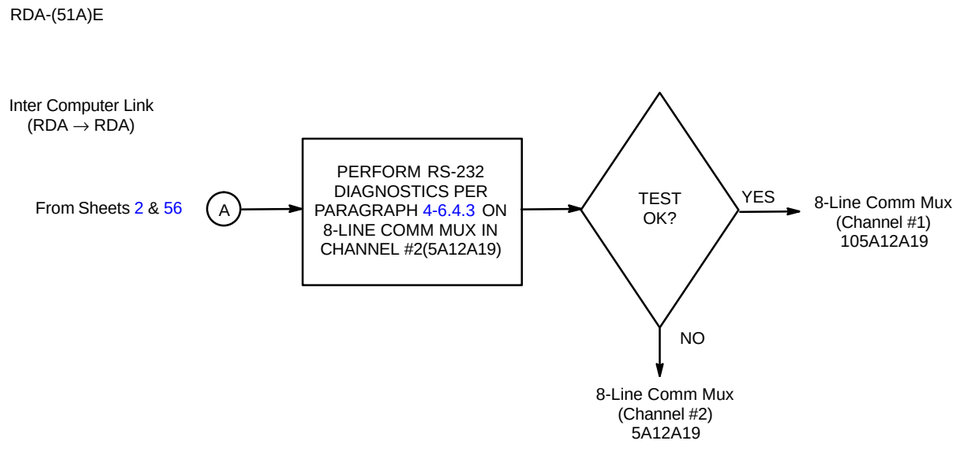


NX2051

Figure 6-2. RDA Fault Isolation Flowchart (Redundancy)
(Sheet 52 of 57)

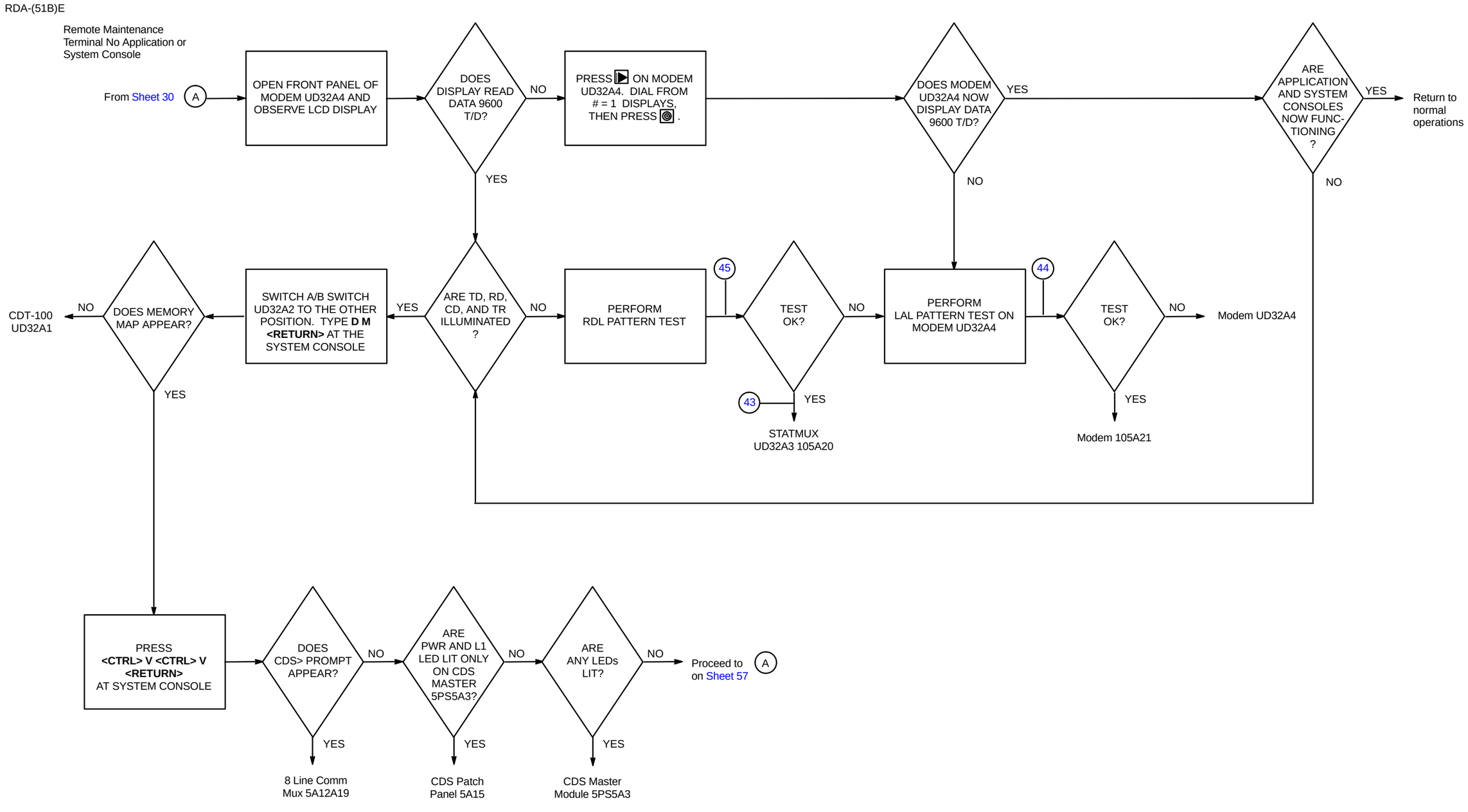


Figure 6-2. RDA Fault Isolation Flowchart (Redundancy) (Sheet 53 of 57)

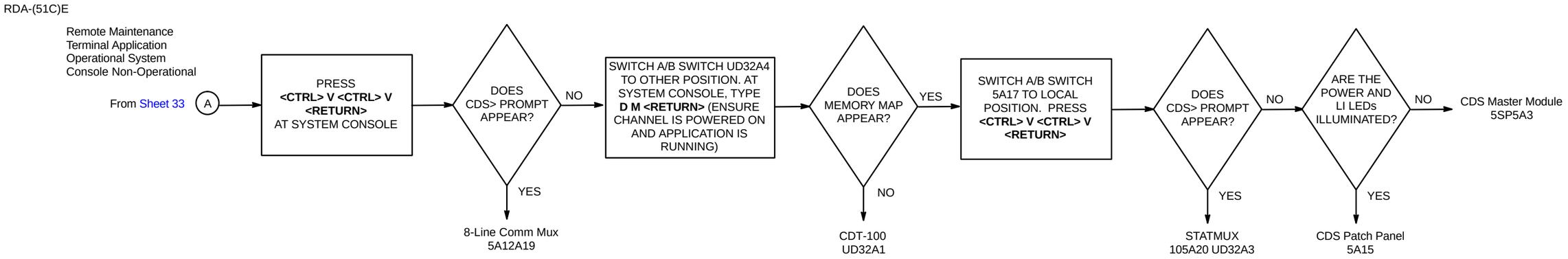


NX2053

Figure 6-2. RDA Fault Isolation Flowchart (Redundancy)
(Sheet 54 of 57)

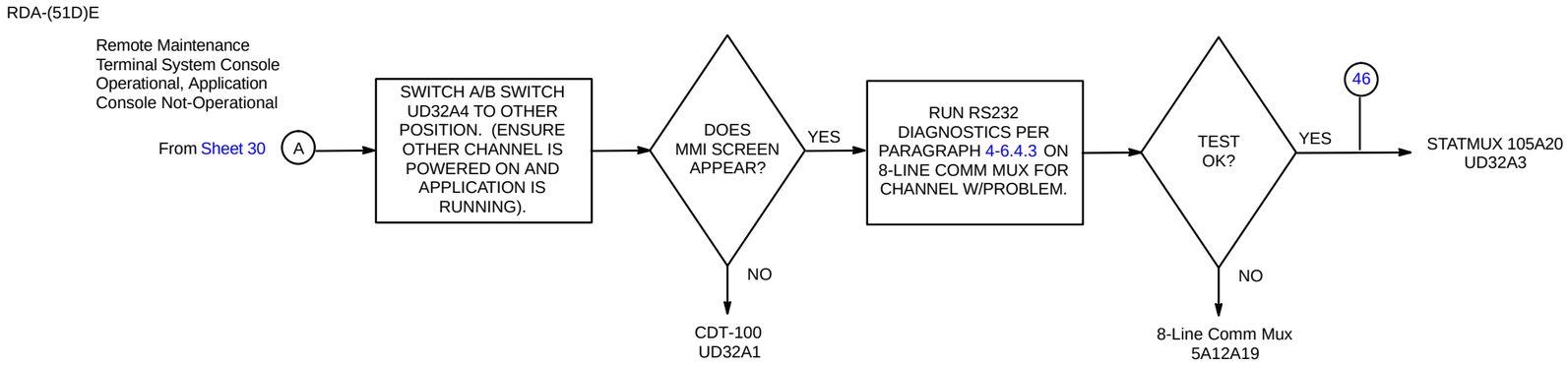


NX2054

Figure 6-2. RDA Fault Isolation Flowchart (Redundancy)
(Sheet 55 of 57)

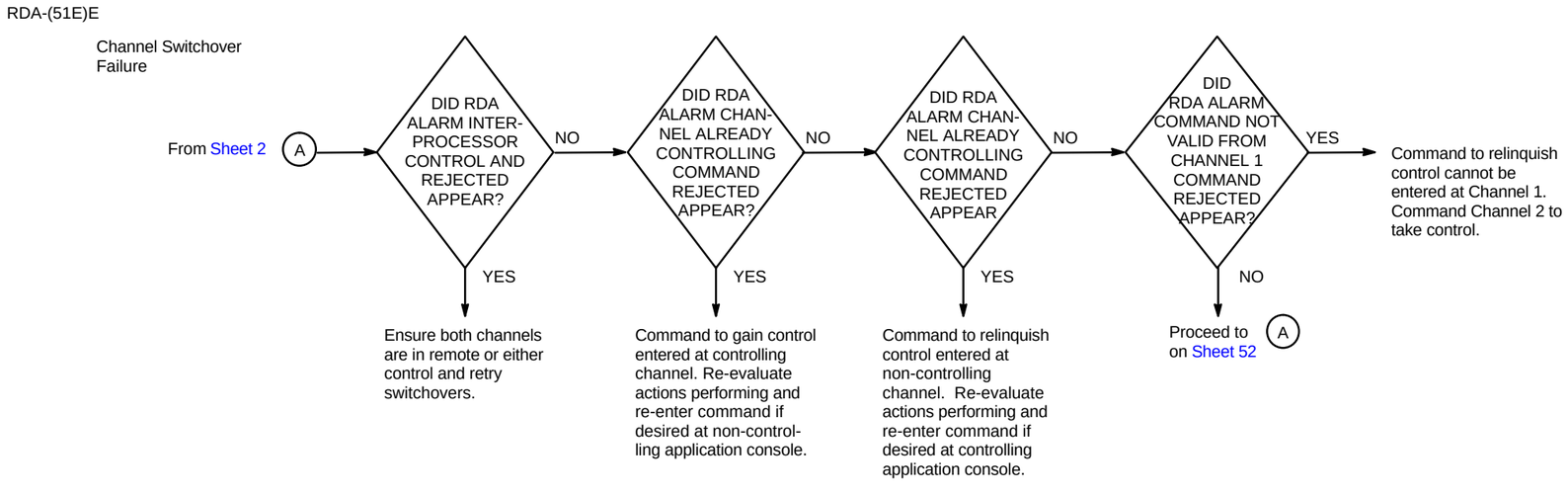


NX2055

Figure 6-2. RDA Fault Isolation Flowchart (Redundancy)
(Sheet 56 of 57)

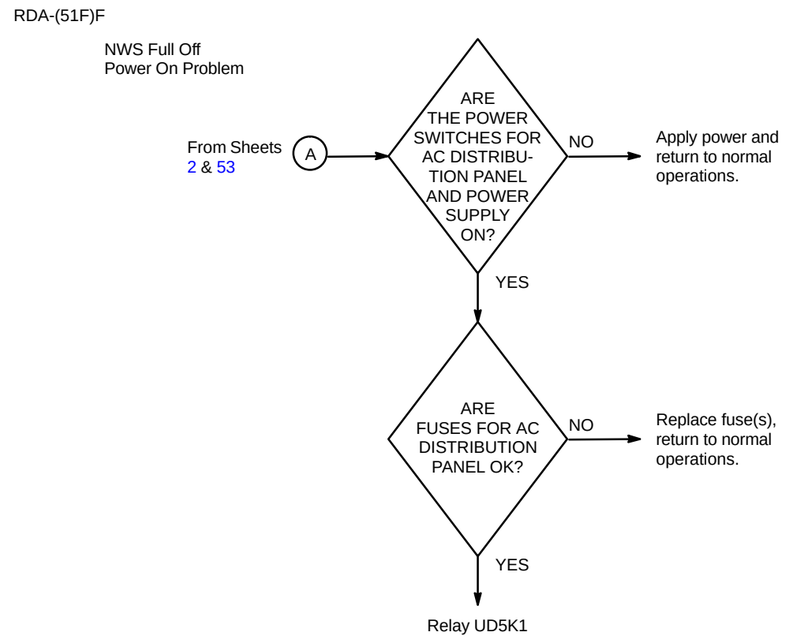


NX2056

Figure 6-2. RDA Fault Isolation Flowchart (Redundancy)
(Sheet 57 of 57)

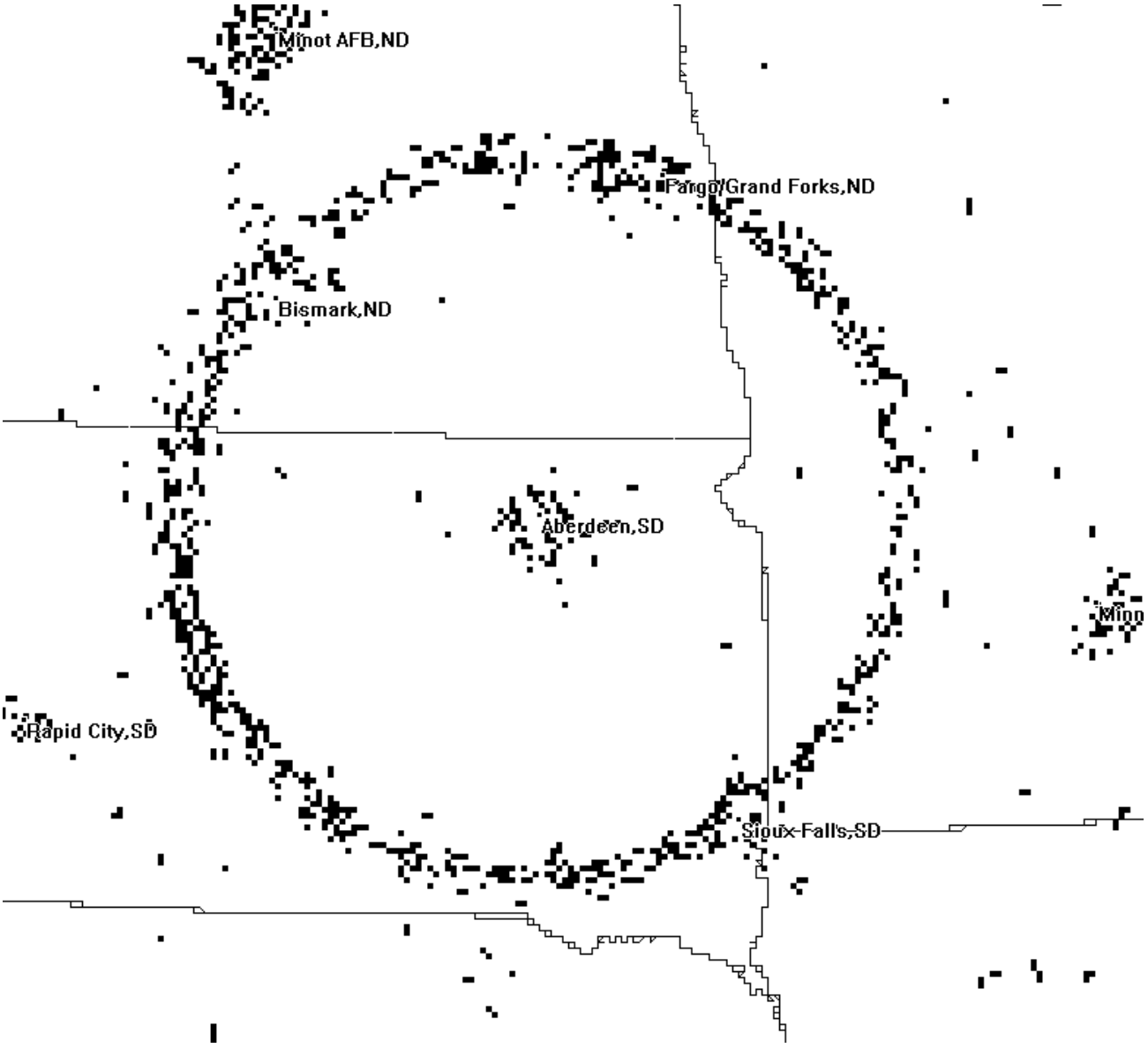


Figure 6-3. Example of Noise Contamination in Outer Annular Ring (AU3)

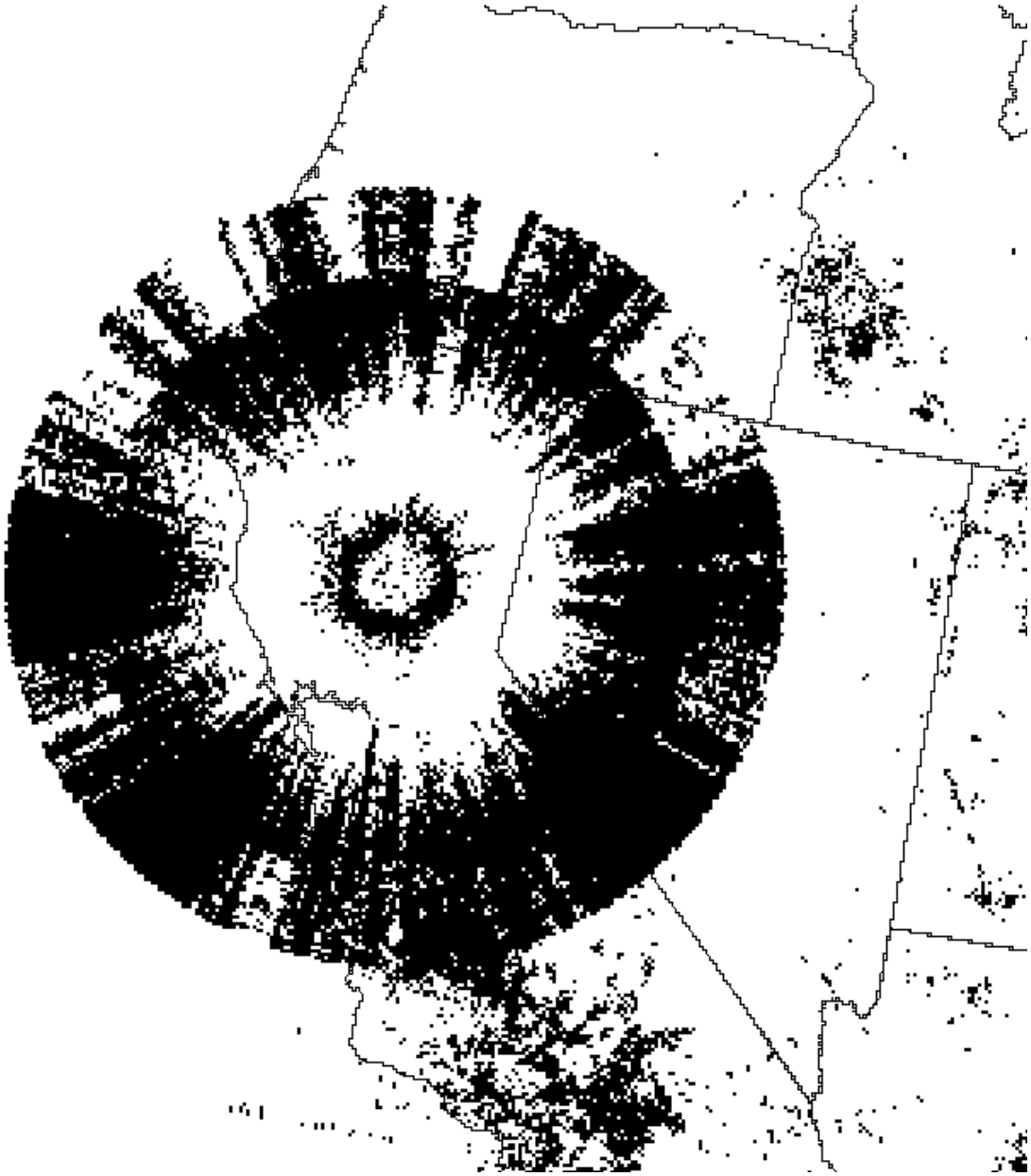

NX2058

Figure 6-4. Example of Col - Contamination Over Entire Usable Area of Monitor Display

# Section 6-4. Secondary Fault Isolation

## 6-4.1 INTRODUCTION.

When primary fault isolation leads to a group of two or more LRUs, the secondary fault procedures are used to isolate faults to a single LRU. In the RDA, the secondary fault isolation procedures are divided into seven functional areas which are listed along with their corresponding designations and paragraphs as follows:

| Functional Areas | Procedure Designation | Paragraph |
|---|---|---|
| Transmitter | T1 through T33 | 6-4.2 |
| Antenna/Pedestal | ANT1 through ANT8 | 6-4.3 |
| Receiver | R1 through R12 | 6-4.4 |
| Hardwired Signal Processor | HSP1 through HSP8 | 6-4.5 |
| Programmable Signal Processor | PSP1 through PSP4 | 6-4.6 |
| RDADP (M3200) | RDA1 and RDA2 | 6-4.7 |
| Maintenance Terminal | M1 and M2 | 6-4.8 |

## 6-4.2 TRANSMITTER FUNCTIONAL GROUP.

The RDA primary fault isolation flowchart (Figure 6-2) references 33 secondary fault isolation procedures for the ambiguous fault groups in the transmitter functional group. These procedures are designated T1 through T33 (enclosed in rectangles) and are contained in Figure 6-5.

The test equipment required to perform these procedures are listed as follows:

- Digital Multimeter, Fluke Model 8060A or equivalent
- Oscilloscope, Tektronix Model 2236A or equivalent
- Logic Probe, Model HP545A
- Power Supply Adjusting Tool
- Resistance Bridge
- Capacitance Analyzer

The tools and materials required to perform these procedures are:

- Dielectric oil (25 gal. max)
- Dolly platform
- Oil transfer pump kit
- Oil tank dolly
- Pan, oil drip
- Screwdriver socket, Phillips-bit

- Screwdriver set, flat-tip
- Screwdriver set, Phillips-tip
- Torque wrench, 30 to 200 in-lb
- Wrench set, adjustable
- Wrench set, combination
- Tie wraps (4)
- Soldering gun
- Screwdriver, offset Phillips-tip
- Wrench set, socket, 1/2-inch
- Screwdriver, miniature
- Filament load assembly
- Adapter, BNC male-to-BNC male
- Crystal detector
- ESD component handling kit
- SMA torque wrench
- Adapter, SMA female-to-BNC female
- Adapter, SMA female-to-N female
- 8-foot cable, BNC male-to-BNC male
- 8-foot cable, SMA male-to-SMA male

Notes for Figure 6-5. (Transmitter Secondary Fault Isolation Flowchart)

(1) PERFORM THE PFN TOGGLE TEST

| Step | Operator Action | System Response/Comments |
|---|---|---|
| 1. | At the RDA Applications Terminal: | |
| | a. On the command and parameter lines, enter: **TERP<Tab>*password*** **<Return>**. | Puts the transmitter in standby mode, places the antenna in park, and terminates the application program. |
| | b. Press the **<Shift>** and **<Port>** keys **simultaneously**. | Switches to RDA System Console. |
| 2. | At the RDA System Console: | |
| | a. Enter: | |
| | **RDASOT<Return>** | Brings up RDASOT. Displays Main Menu. |
| | **2<Return>** | Displays Diagnostic Menu. |
| | **7<Return>** | To select Transmitter Diagnostics. |
| | **4<Return>** | To Deselect All Subtests. |
| | **5<Return>** | To Select Individual Subtests. |
| | **2<Return>** | To Select Subtest 2 - PFN Toggle Check. Note `SELECTED` is displayed for Subtest 2. |
| | **Ø<Return>** | To select Subtest Selection Complete. |
| | **1<Return>** | To select Begin Subtest Execution. |
| | b. At completion of test, enter **Ø<Return>**. | To return to Diagnostic Menu. |
| | c. If terminating RDASOT is desired, enter: | |
| | **Ø<Return>** | To return to the Main Menu. |
| | **Ø<Return>** | To terminate RDASOT. This is indicated by: `RDASOTXX:END OF TASK 0` |

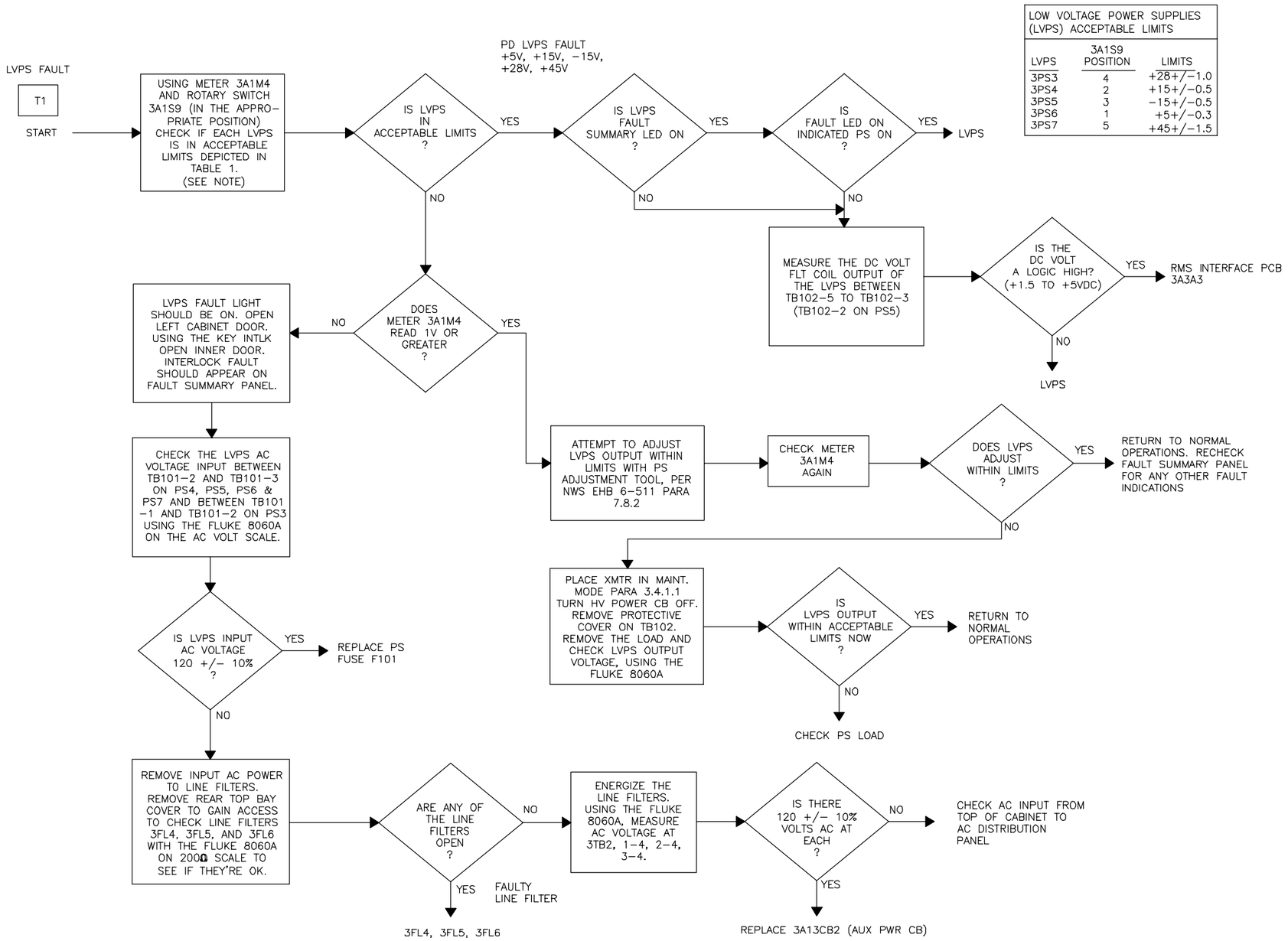


NX2059

Figure 6-5. Transmitter Secondary Fault Isolation Flowchart (Sheet 1 of 39)

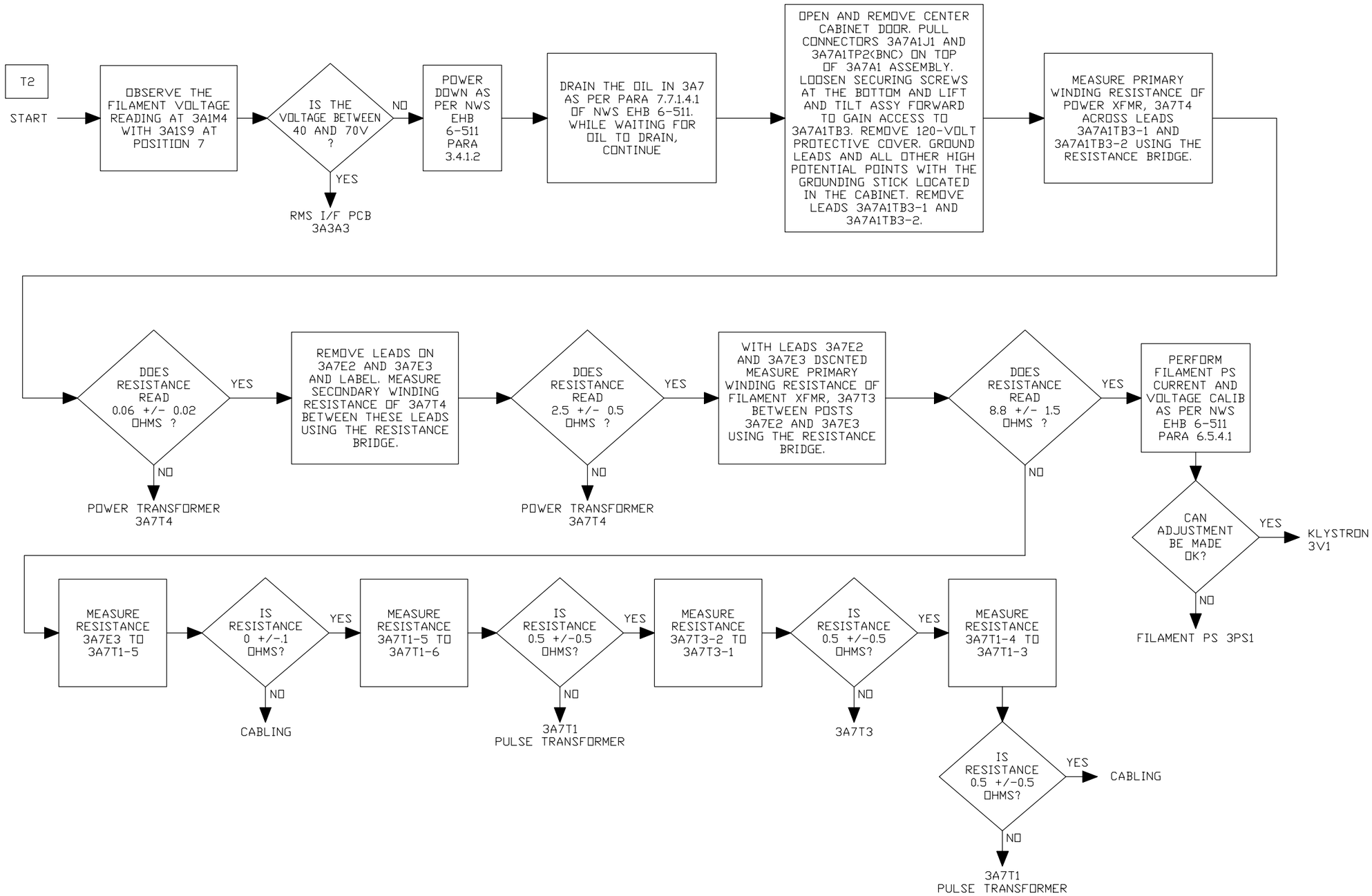


Figure 6-5. Transmitter Secondary Fault Isolation Flowchart (Sheet 2 of 39)

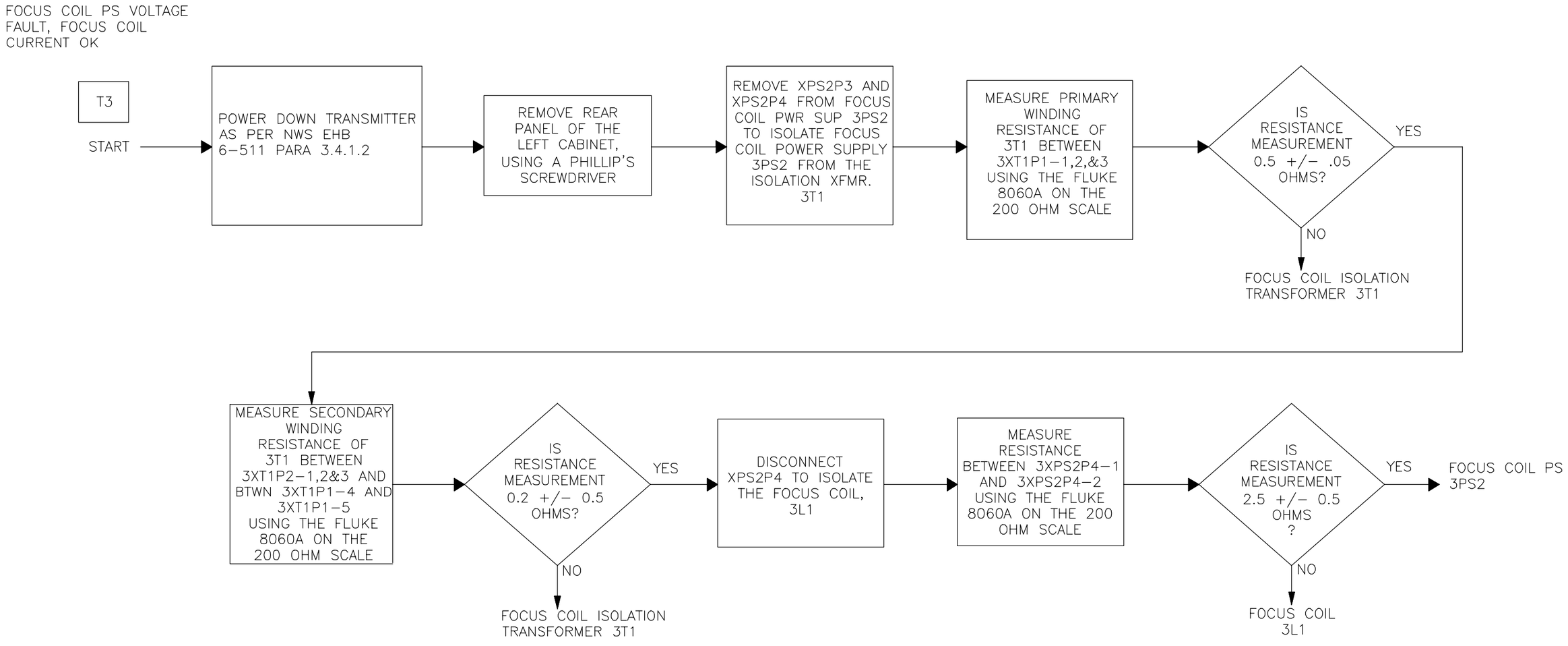


Figure 6-5. Transmitter Secondary Fault Isolation Flowchart (Sheet 3 of 39)

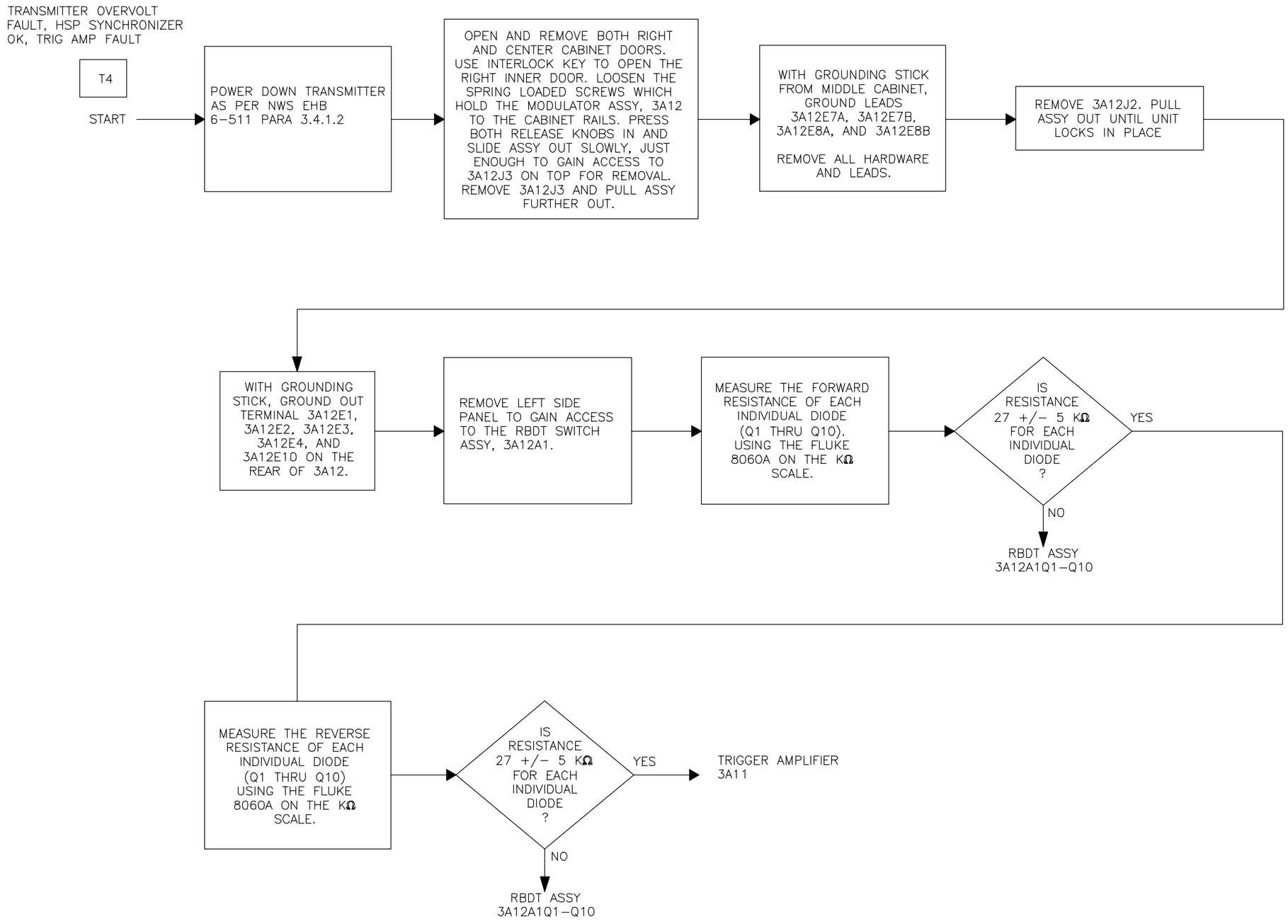


NX2062

Figure 6-5. Transmitter Secondary Fault Isolation Flowchart (Sheet 4 of 39)

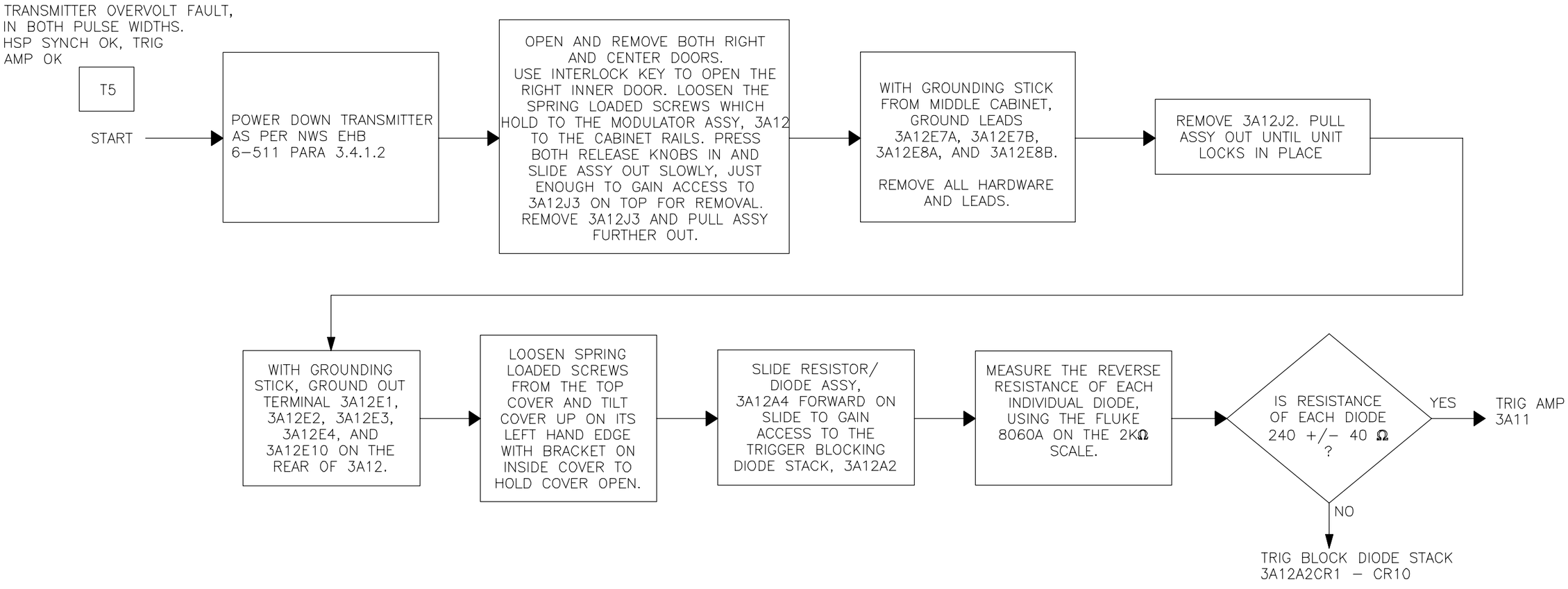


Figure 6-5. Transmitter Secondary Fault Isolation Flowchart (Sheet 5 of 39)

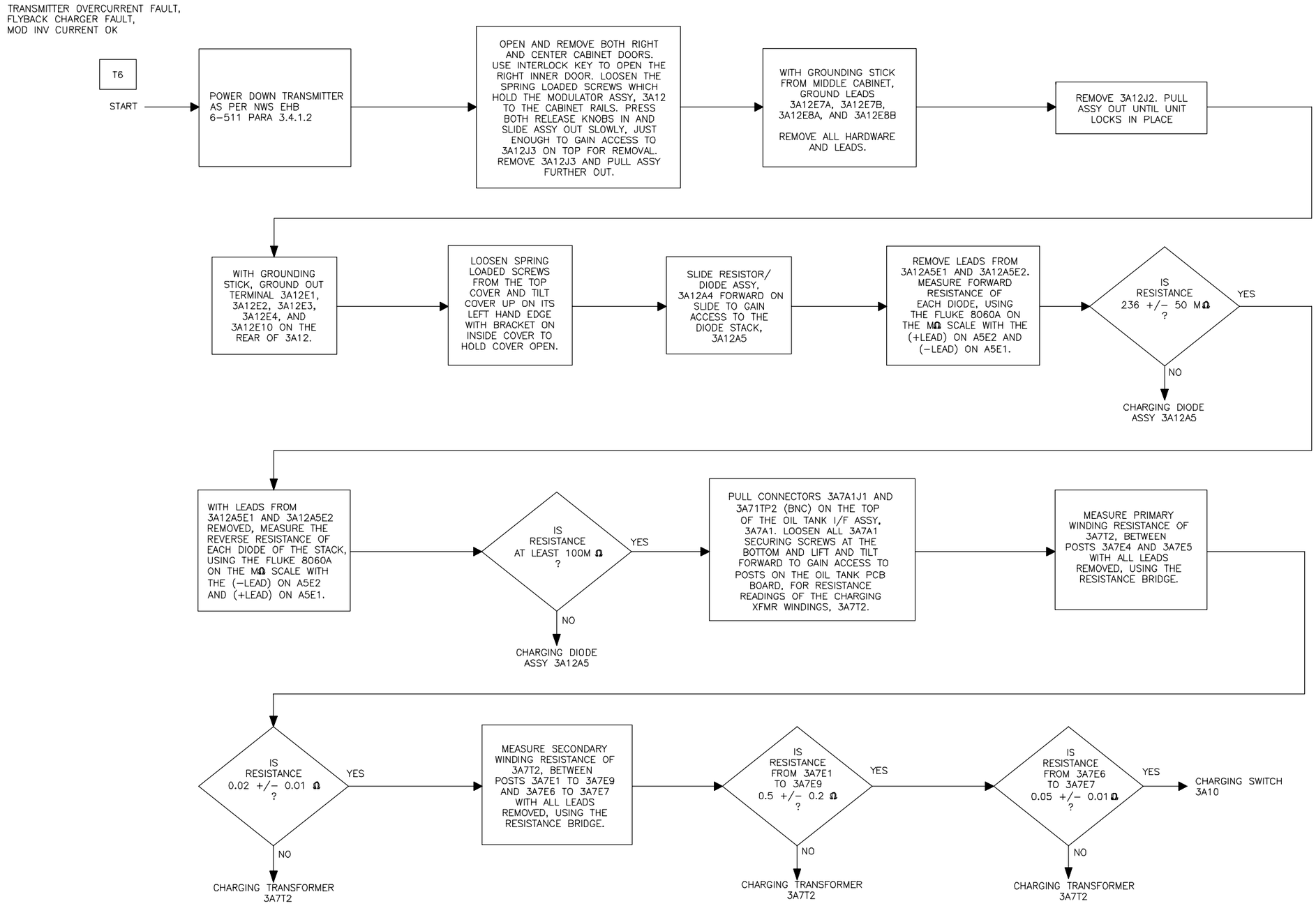


NX2064

Figure 6-5. Transmitter Secondary Fault Isolation Flowchart (Sheet 6 of 39)

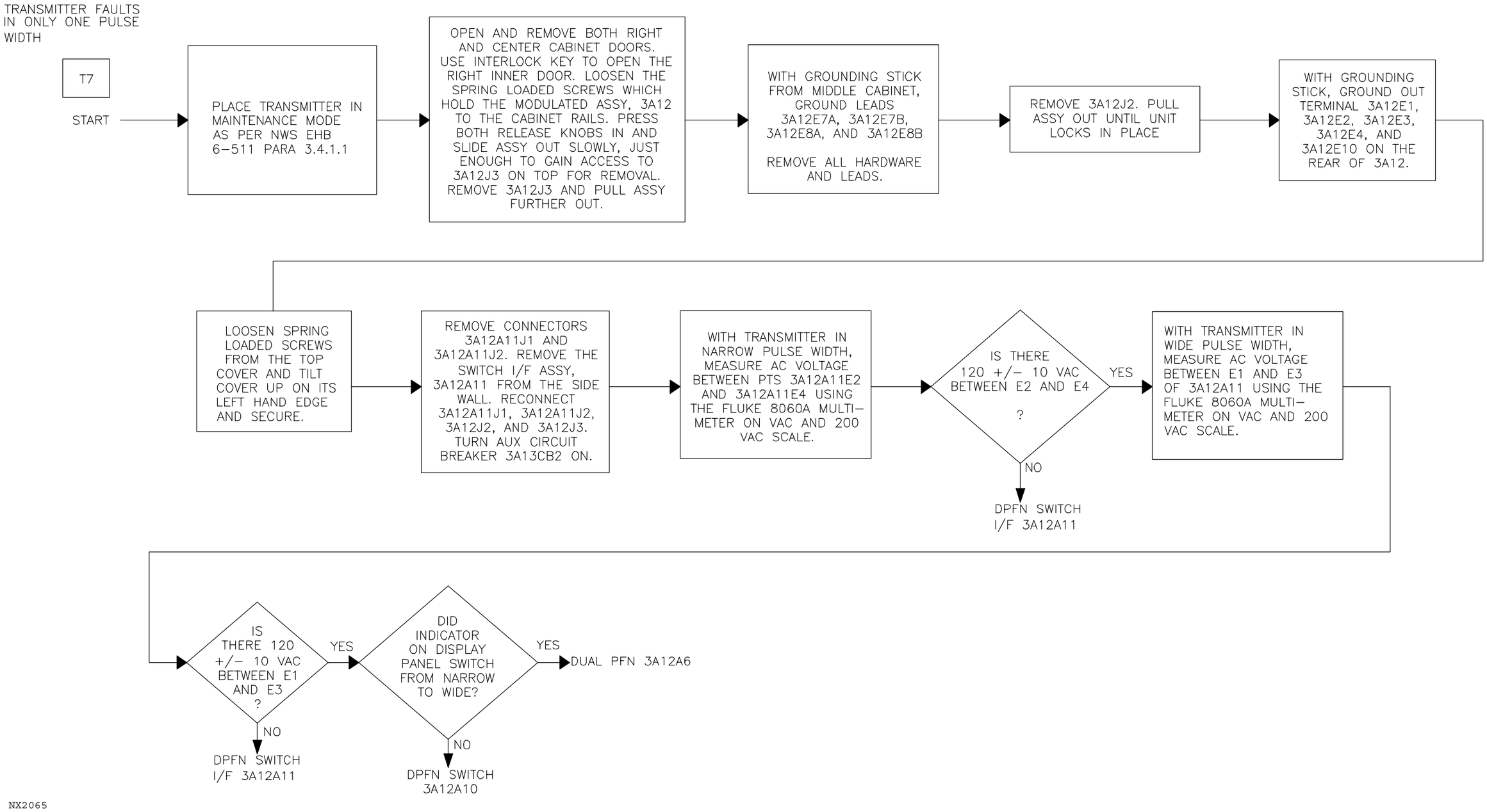


Figure 6-5. Transmitter Secondary Fault Isolation Flowchart (Sheet 7 of 39)

TRANSMITTER OVERCURRENT FAULT,
FLYBACK CHARGER OK,
INV DIODE CURRENT FAULT
BOTH PULSE WIDTHS

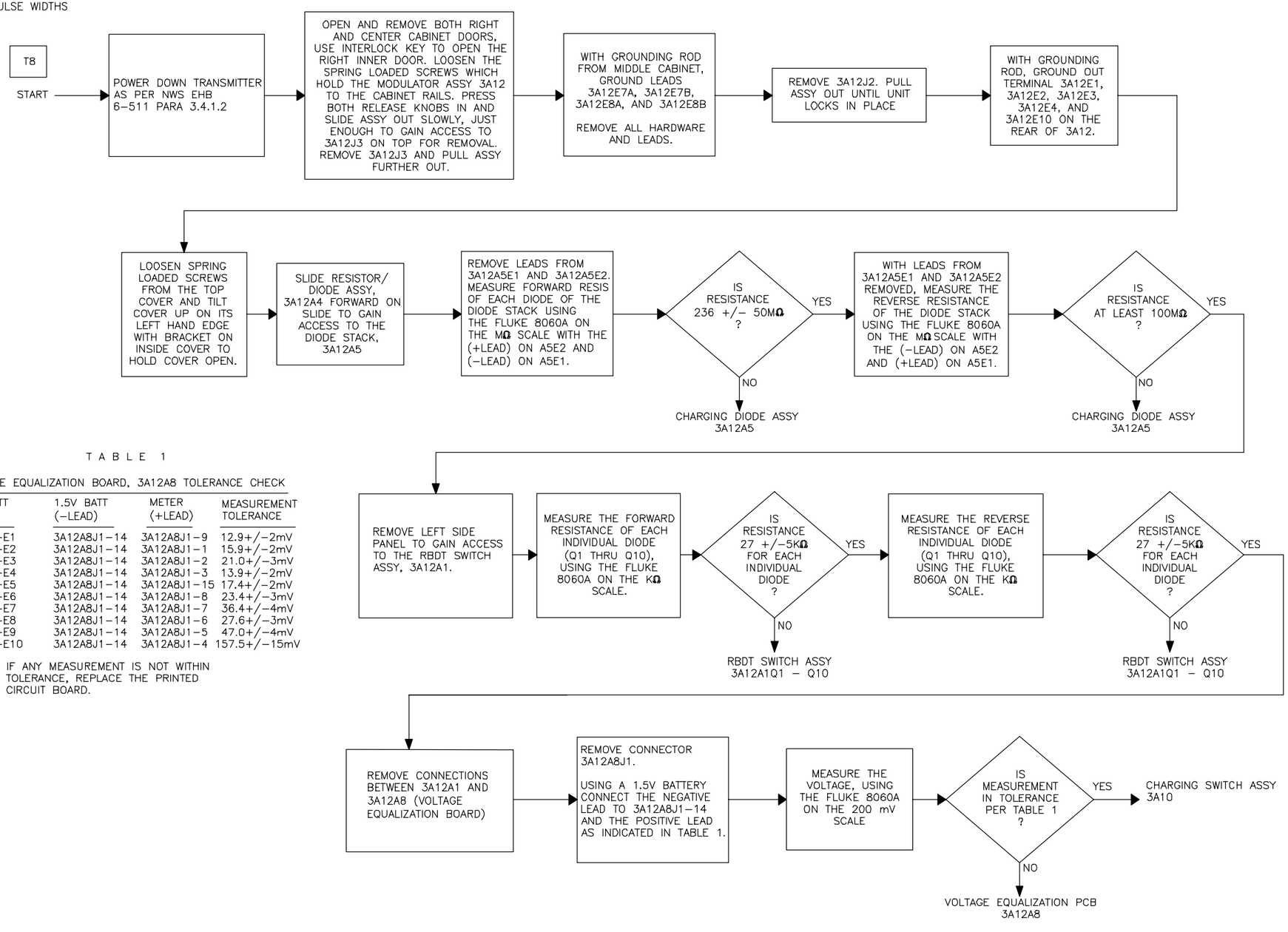


TABLE 1

VOLTAGE EQUALIZATION BOARD, 3A12A8 TOLERANCE CHECK

| 1.5V BATT (+LEAD) | 1.5V BATT (–LEAD) | METER (+LEAD) | MEASUREMENT TOLERANCE |
|---|---|---|---|
| 3A12A8–E1 | 3A12A8J1–14 | 3A12A8J1–9 | 12.9+/–2mV |
| 3A12A8–E2 | 3A12A8J1–14 | 3A12A8J1–1 | 15.9+/–2mV |
| 3A12A8–E3 | 3A12A8J1–14 | 3A12A8J1–2 | 21.0+/–3mV |
| 3A12A8–E4 | 3A12A8J1–14 | 3A12A8J1–3 | 13.9+/–2mV |
| 3A12A8–E5 | 3A12A8J1–14 | 3A12A8J1–15 | 17.4+/–2mV |
| 3A12A8–E6 | 3A12A8J1–14 | 3A12A8J1–8 | 23.4+/–3mV |
| 3A12A8–E7 | 3A12A8J1–14 | 3A12A8J1–7 | 36.4+/–4mV |
| 3A12A8–E8 | 3A12A8J1–14 | 3A12A8J1–6 | 27.6+/–3mV |
| 3A12A8–E9 | 3A12A8J1–14 | 3A12A8J1–5 | 47.0+/–4mV |
| 3A12A8–E10 | 3A12A8J1–14 | 3A12A8J1–4 | 157.5+/–15mV |

NOTE: IF ANY MEASUREMENT IS NOT WITHIN TOLERANCE, REPLACE THE PRINTED CIRCUIT BOARD.

NX2066

Figure 6-5. Transmitter Secondary Fault Isolation Flowchart (Sheet 8 of 39)

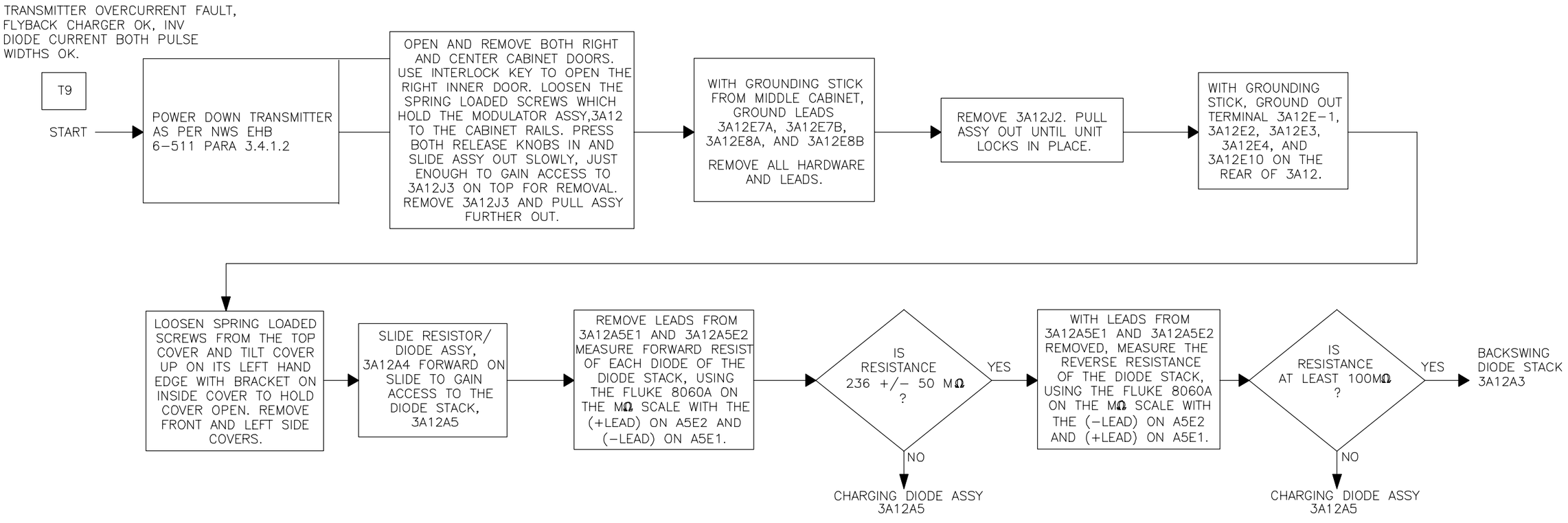


Figure 6-5. Transmitter Secondary Fault Isolation Flowchart (Sheet 9 of 39)

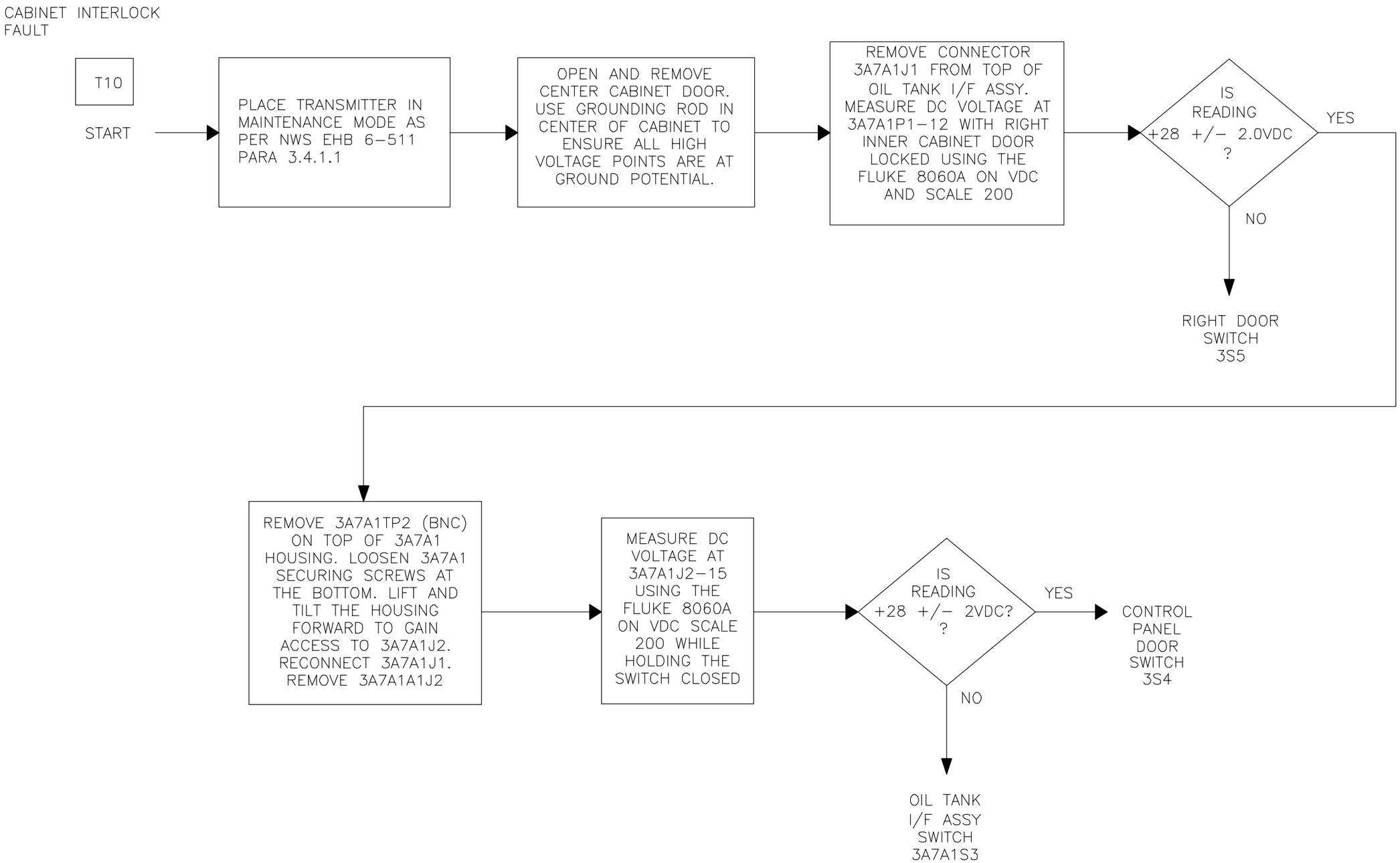


Figure 6-5. Transmitter Secondary Fault Isolation Flowchart (Sheet 10 of 39)

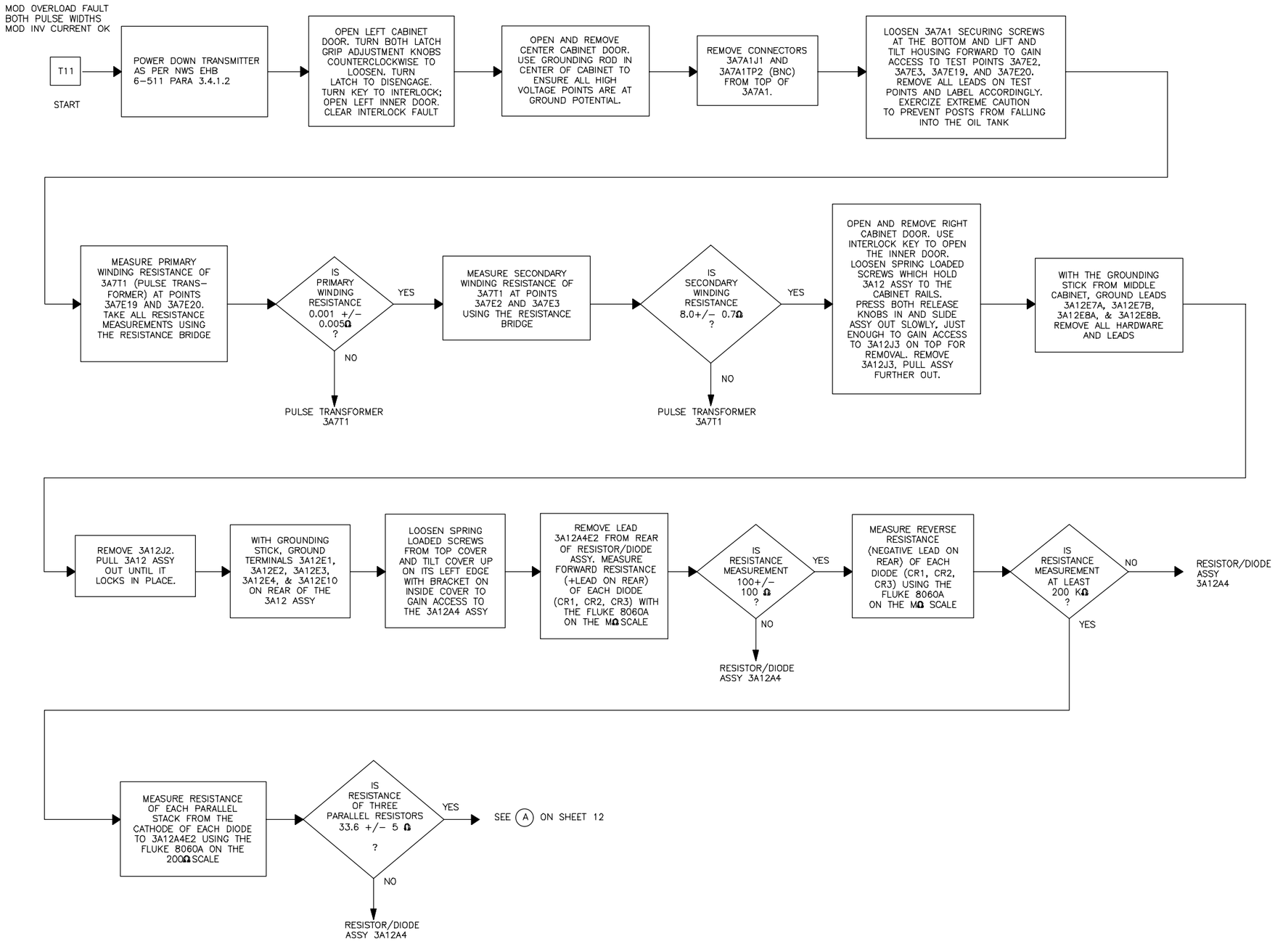


NX2069

Figure 6-5. Transmitter Secondary Fault Isolation Flowchart (Sheet 11 of 39)

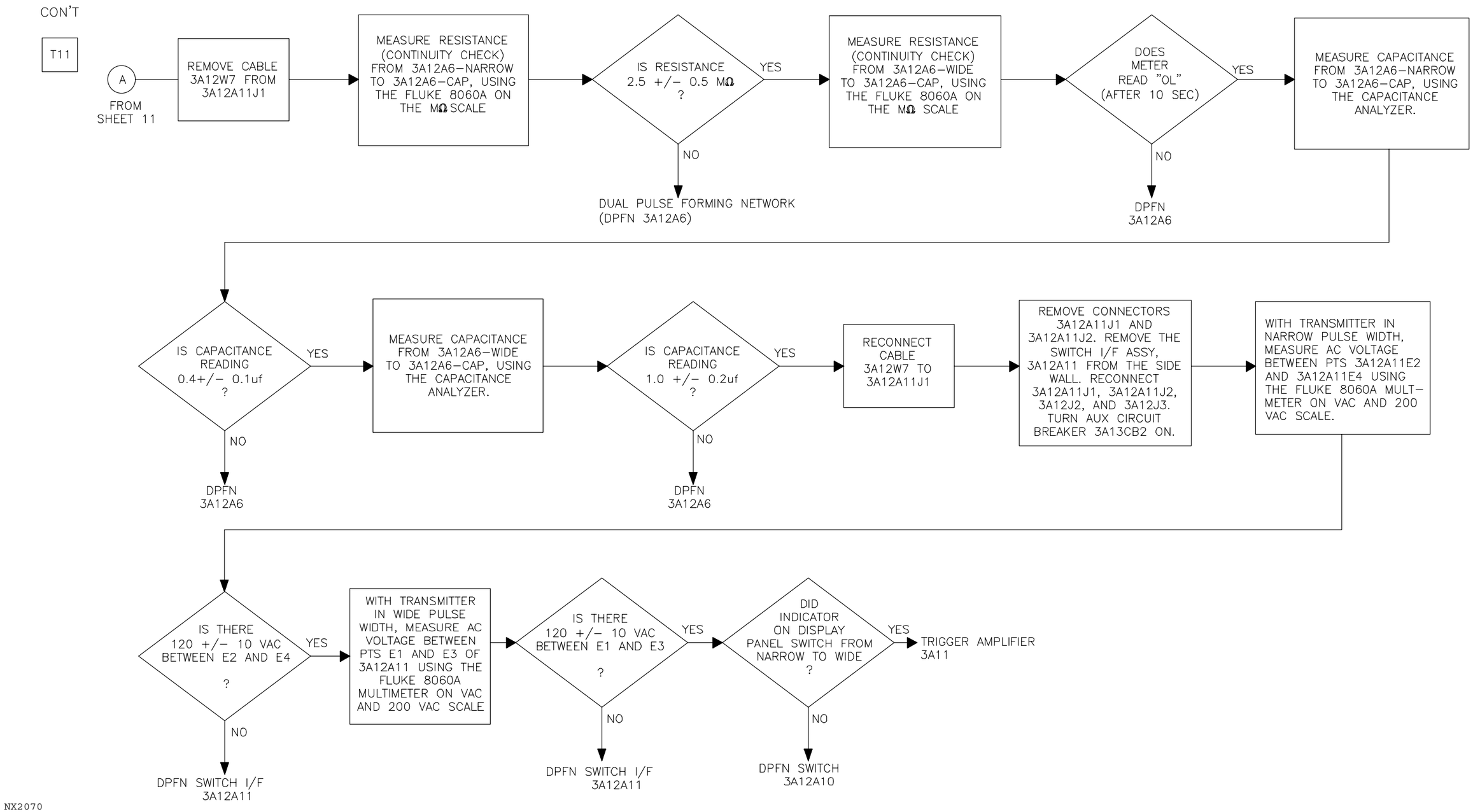


Figure 6-5. Transmitter Secondary Fault Isolation Flowchart (Sheet 12 of 39)

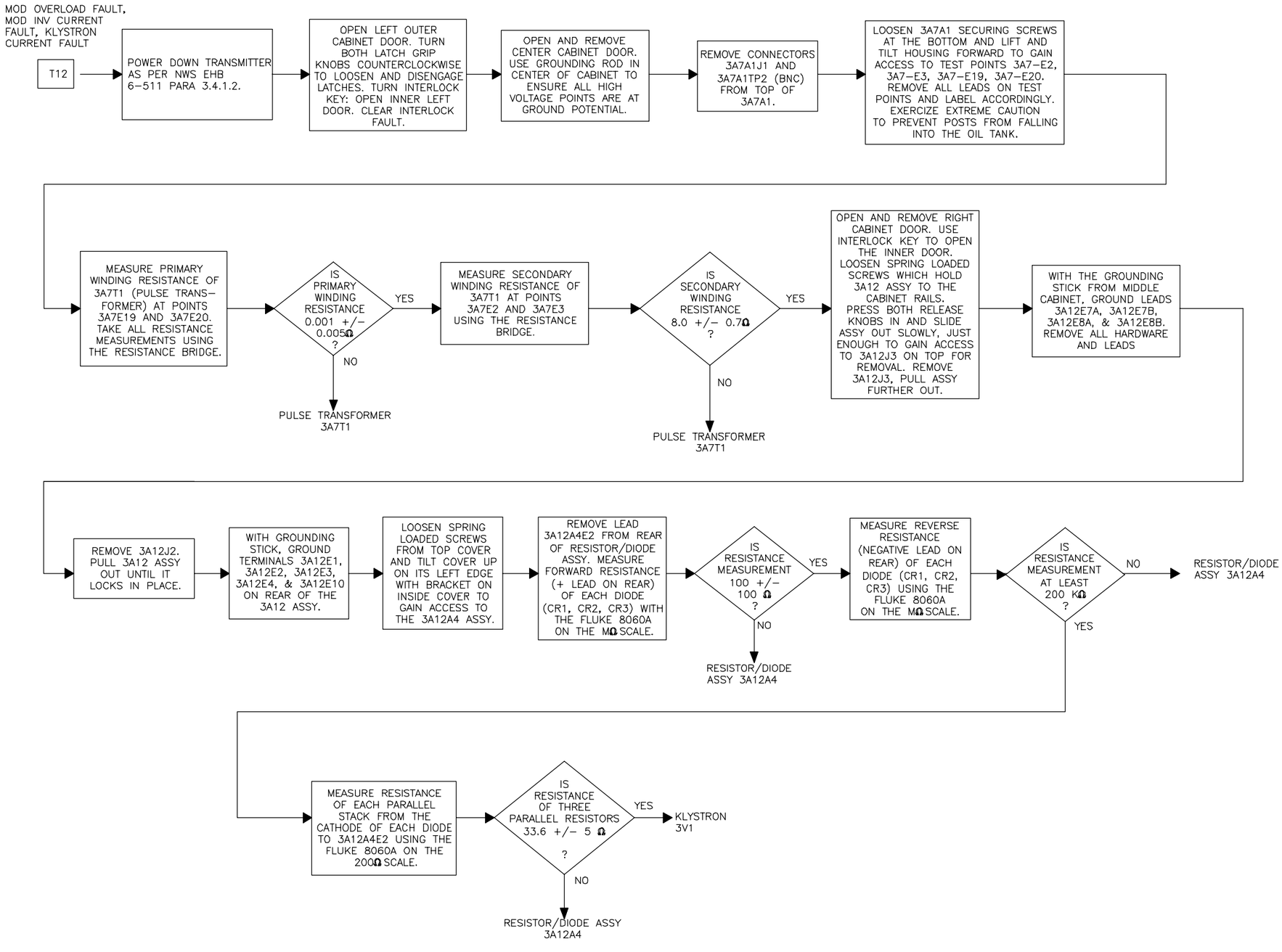


Figure 6-5. Transmitter Secondary Fault Isolation Flowchart (Sheet 13 of 39)

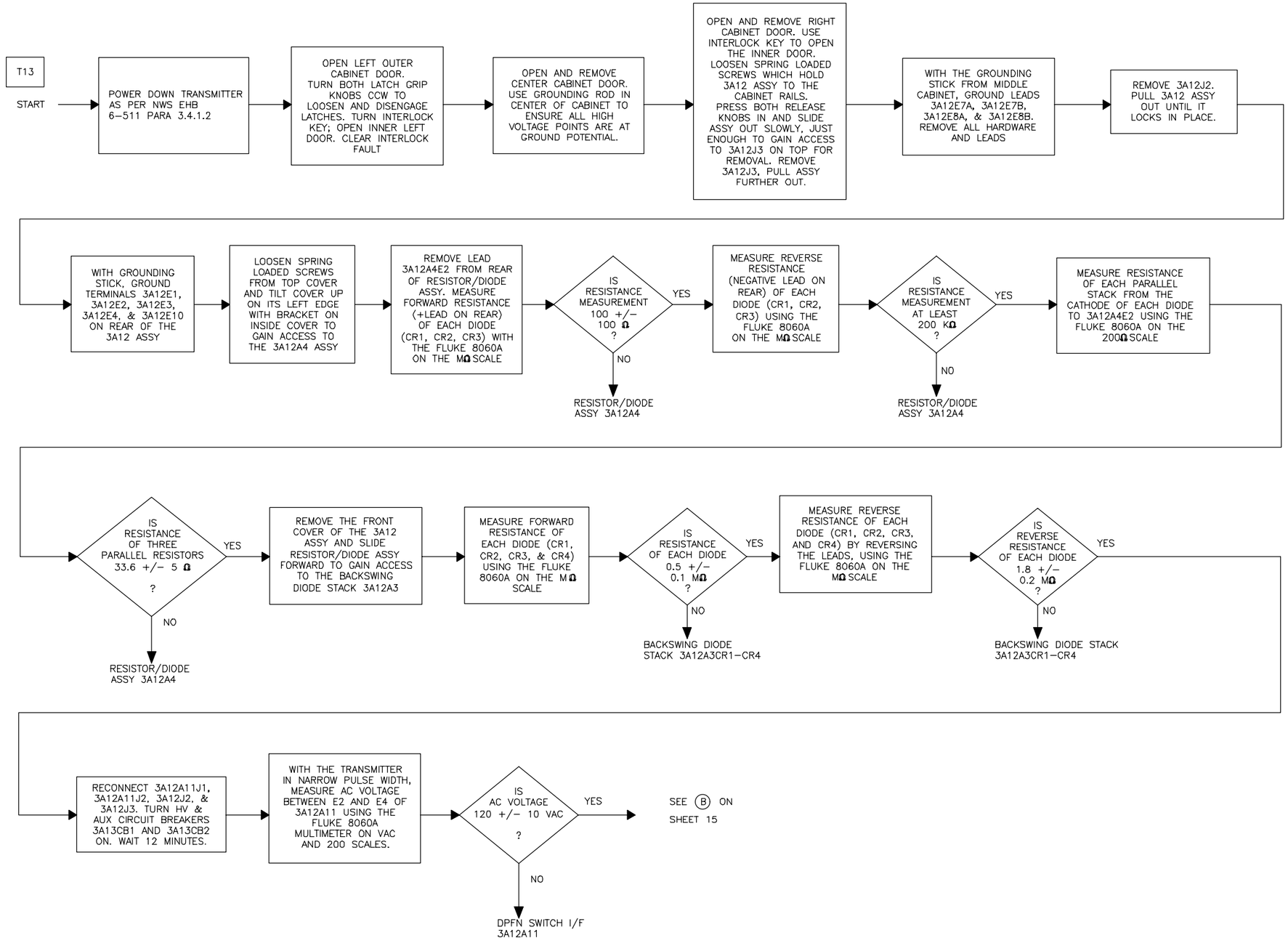


NX2072

Figure 6-5. Transmitter Secondary Fault Isolation Flowchart (Sheet 14 of 39)

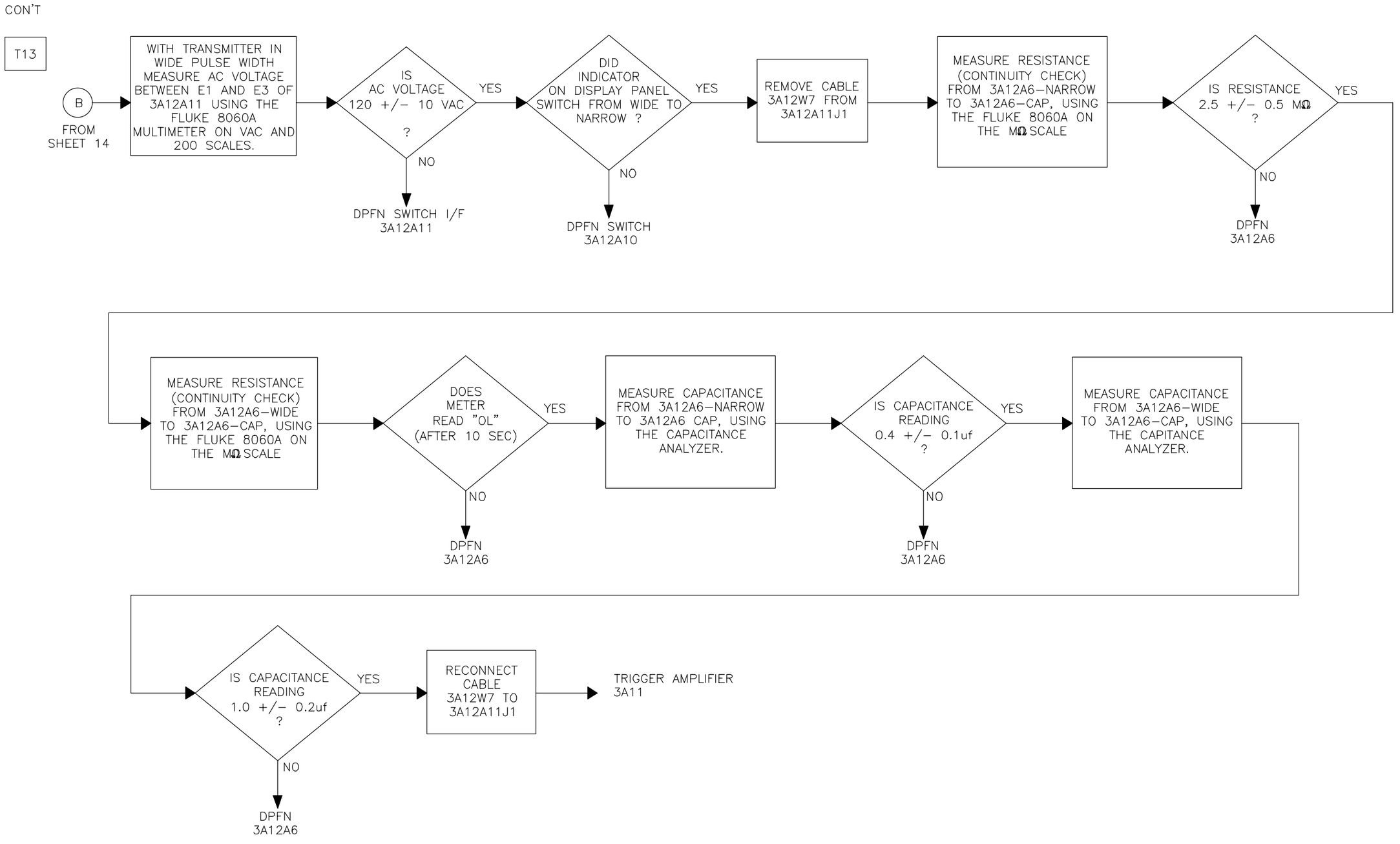


Figure 6-5. Transmitter Secondary Fault Isolation Flowchart (Sheet 15 of 39)

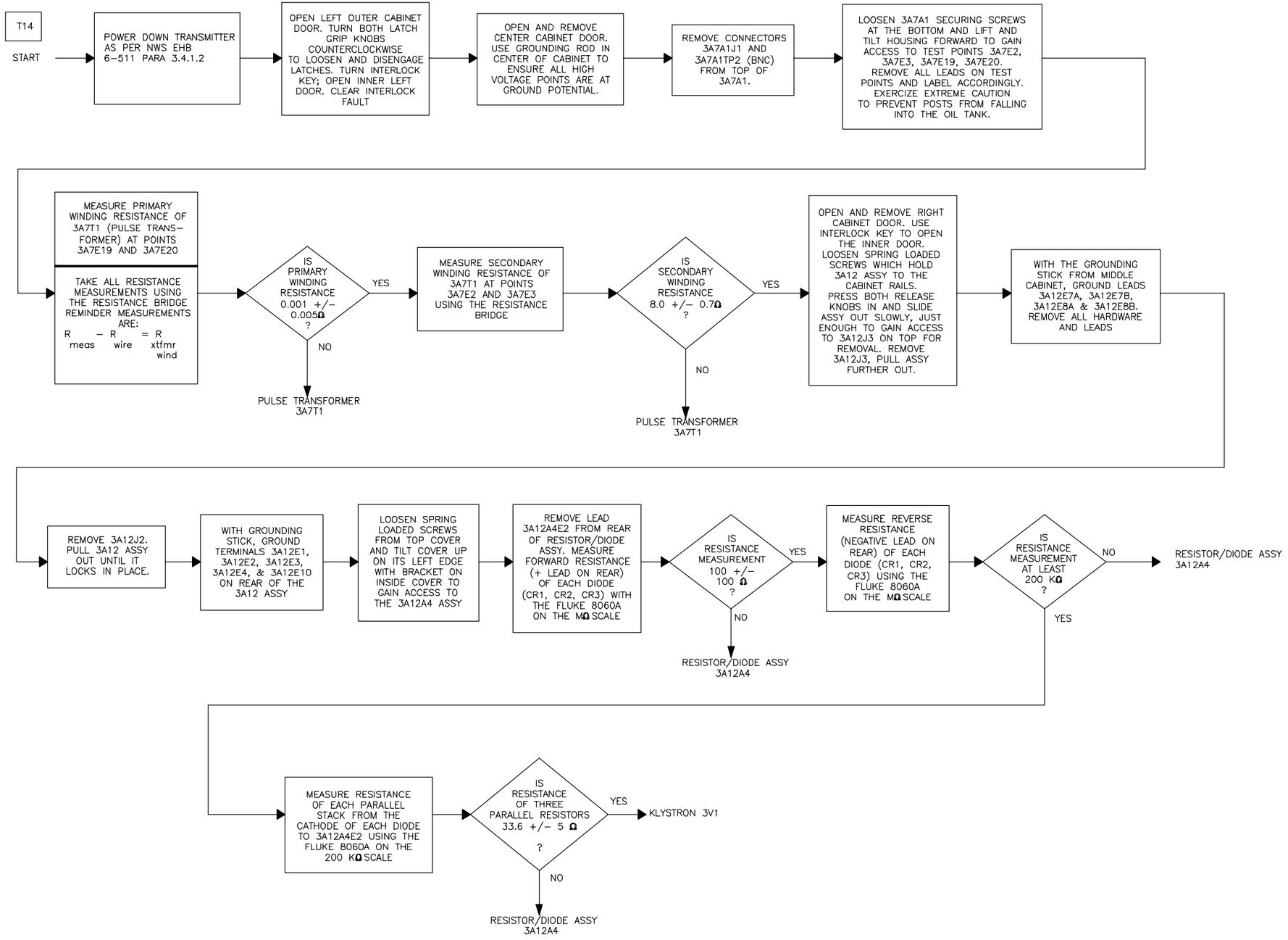


NX2074

Figure 6-5. Transmitter Secondary Fault Isolation Flowchart (Sheet 16 of 39)

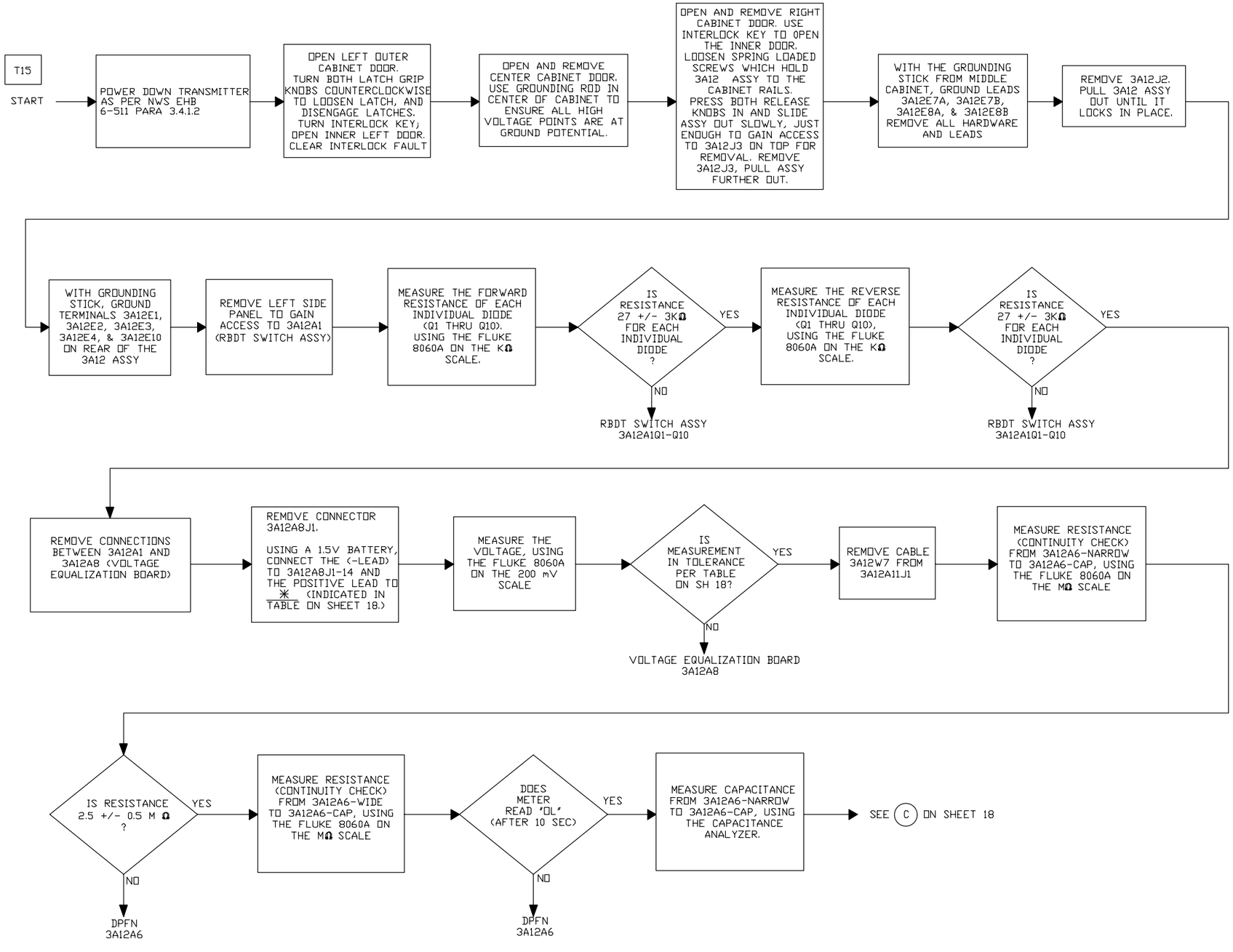


NX2075

Figure 6-5. Transmitter Secondary Fault Isolation Flowchart (Sheet 17 of 39)

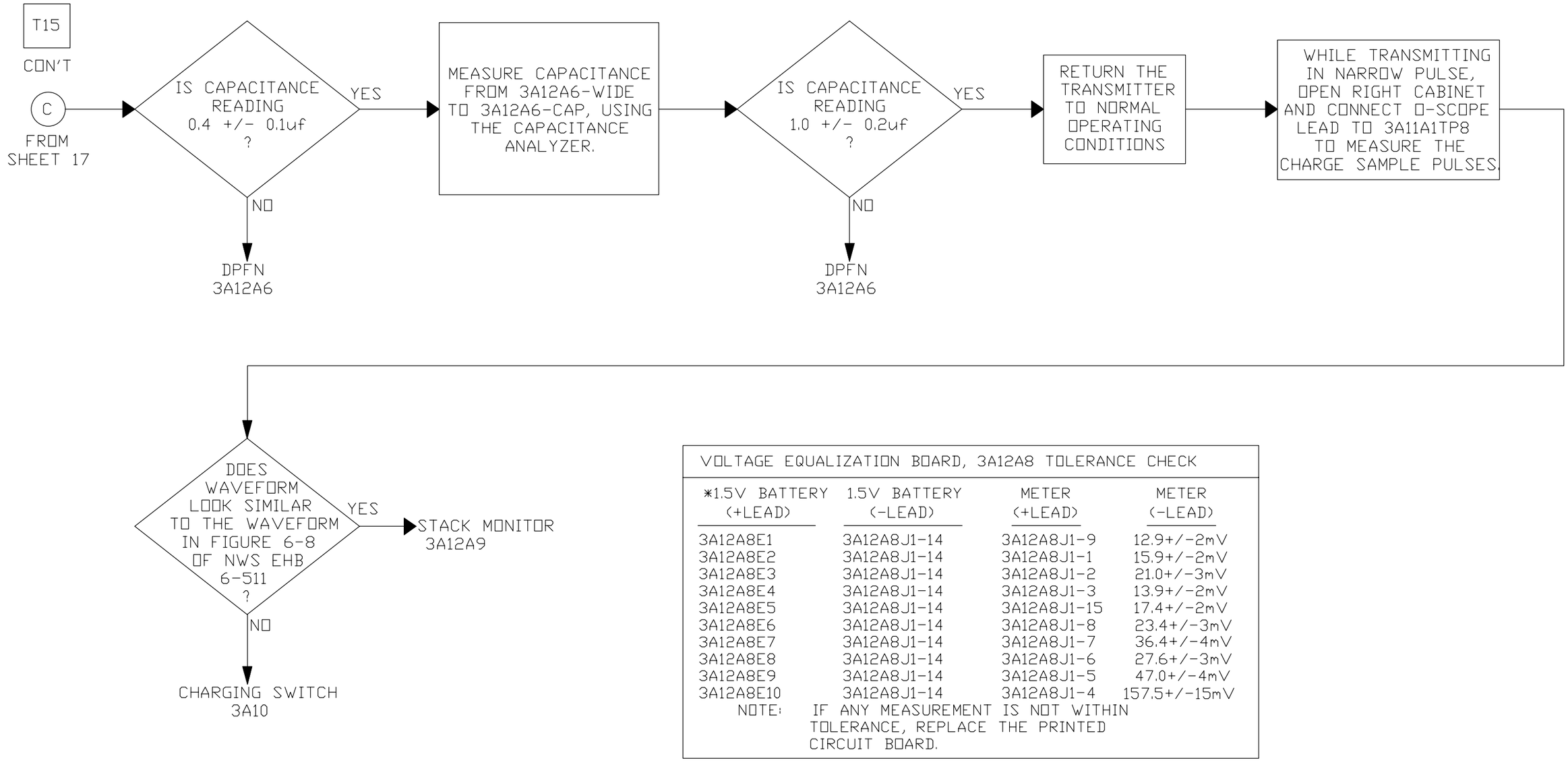


VOLTAGE EQUALIZATION BOARD, 3A12A8 TOLERANCE CHECK

| *1.5V BATTERY (+LEAD) | 1.5V BATTERY (-LEAD) | METER (+LEAD) | METER (-LEAD) |
|---|---|---|---|
| 3A12A8E1 | 3A12A8J1-14 | 3A12A8J1-9 | 12.9+/-2mV |
| 3A12A8E2 | 3A12A8J1-14 | 3A12A8J1-1 | 15.9+/-2mV |
| 3A12A8E3 | 3A12A8J1-14 | 3A12A8J1-2 | 21.0+/-3mV |
| 3A12A8E4 | 3A12A8J1-14 | 3A12A8J1-3 | 13.9+/-2mV |
| 3A12A8E5 | 3A12A8J1-14 | 3A12A8J1-15 | 17.4+/-2mV |
| 3A12A8E6 | 3A12A8J1-14 | 3A12A8J1-8 | 23.4+/-3mV |
| 3A12A8E7 | 3A12A8J1-14 | 3A12A8J1-7 | 36.4+/-4mV |
| 3A12A8E8 | 3A12A8J1-14 | 3A12A8J1-6 | 27.6+/-3mV |
| 3A12A8E9 | 3A12A8J1-14 | 3A12A8J1-5 | 47.0+/-4mV |
| 3A12A8E10 | 3A12A8J1-14 | 3A12A8J1-4 | 157.5+/-15mV |

NOTE: IF ANY MEASUREMENT IS NOT WITHIN TOLERANCE, REPLACE THE PRINTED CIRCUIT BOARD.

NX2076

Figure 6-5. Transmitter Secondary Fault Isolation Flowchart (Sheet 18 of 39)

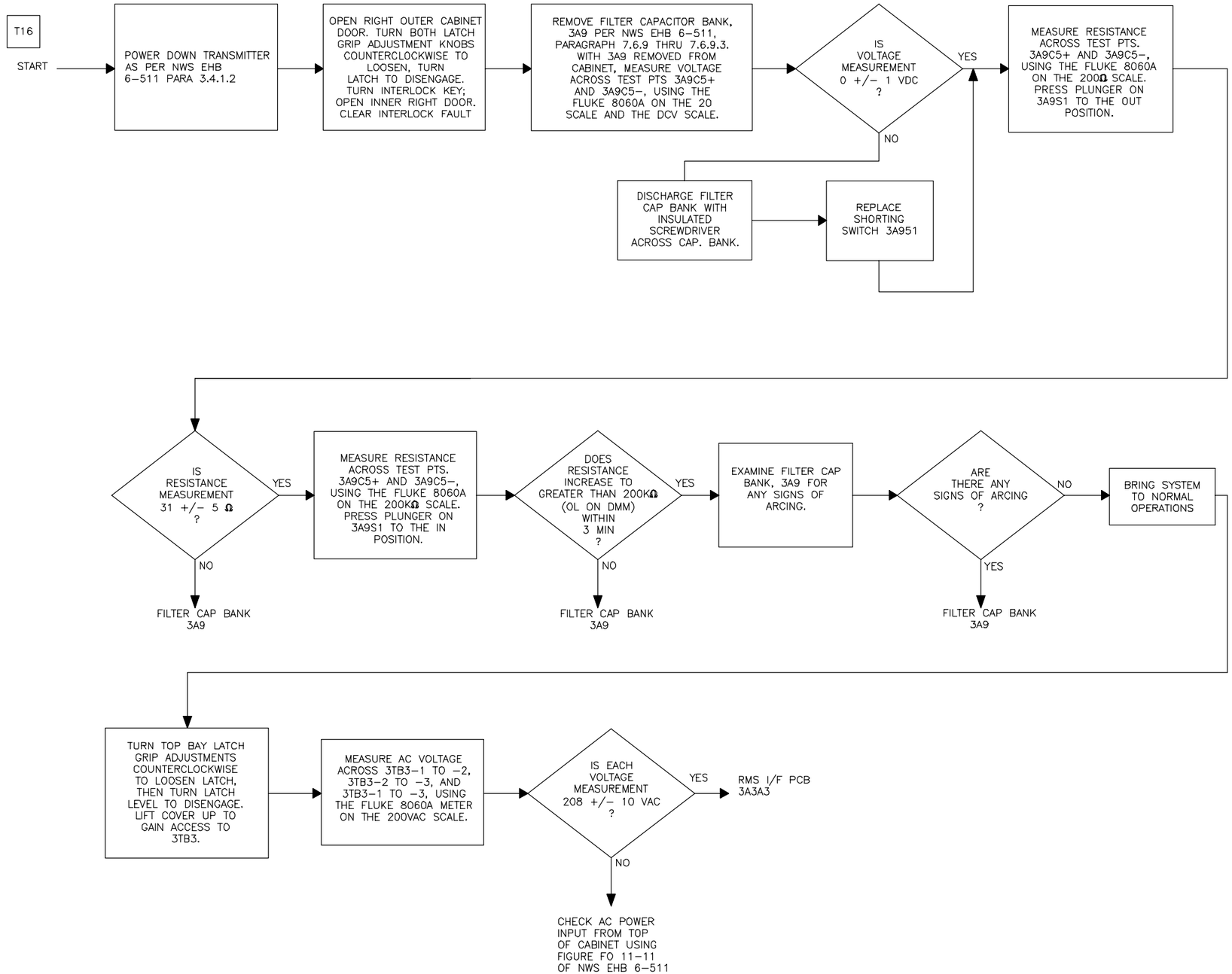


NX2077

Figure 6-5. Transmitter Secondary Fault Isolation Flowchart (Sheet 19 of 39)

FLYBACK CHARGER
FAULT, 280V PS OK

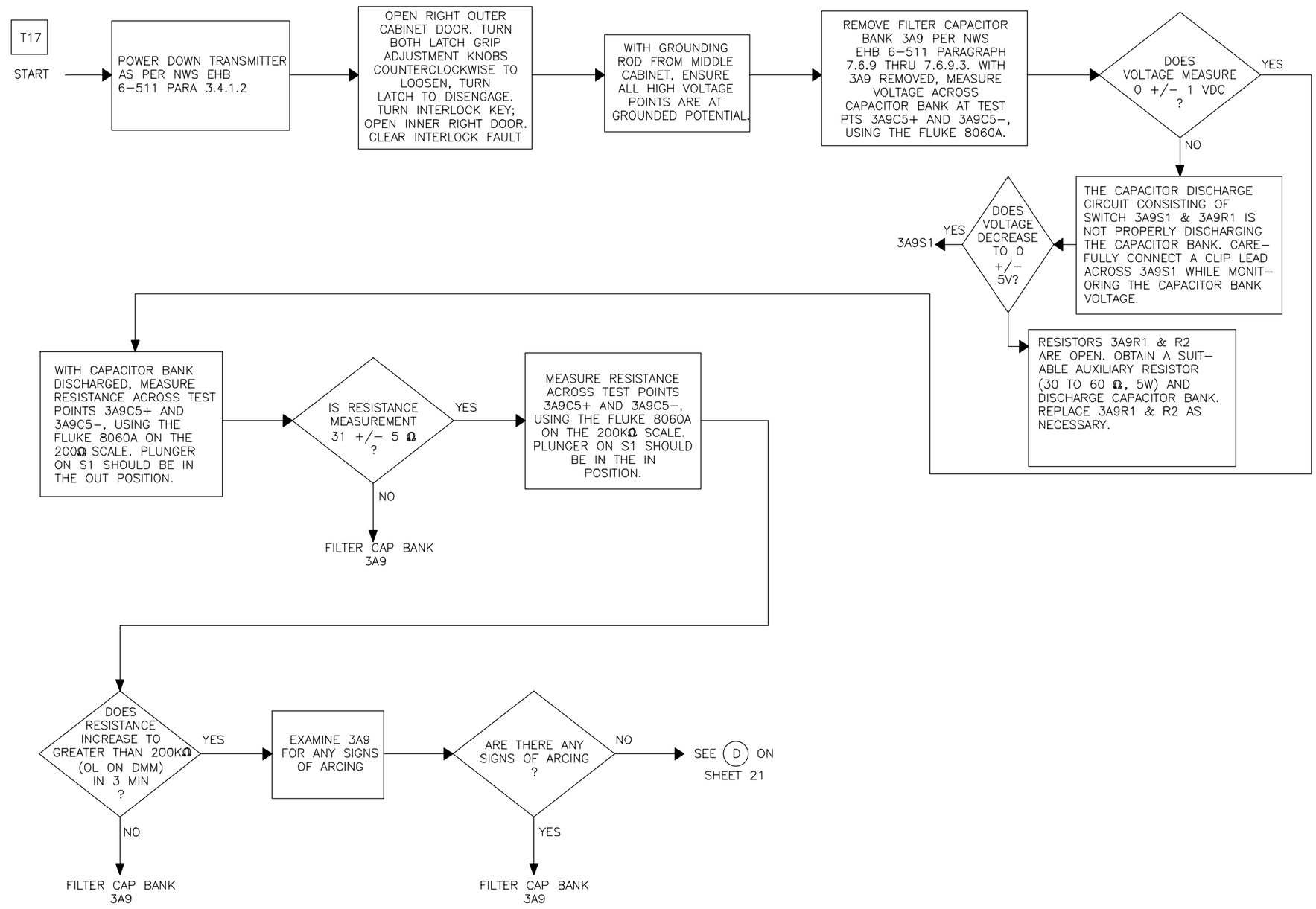


NX2078

Figure 6-5. Transmitter Secondary Fault Isolation Flowchart (Sheet 20 of 39)

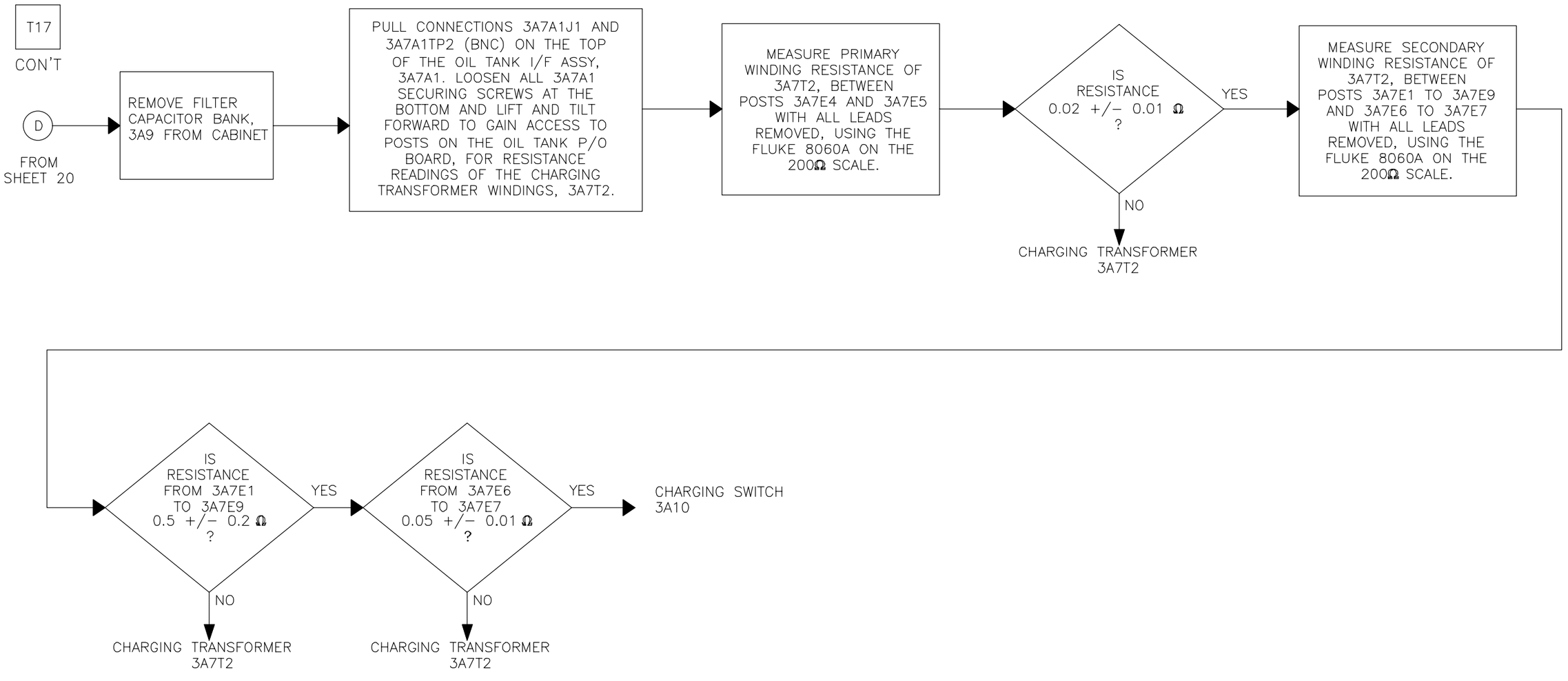


NX2079

Figure 6-5. Transmitter Secondary Fault Isolation Flowchart (Sheet 21 of 39)

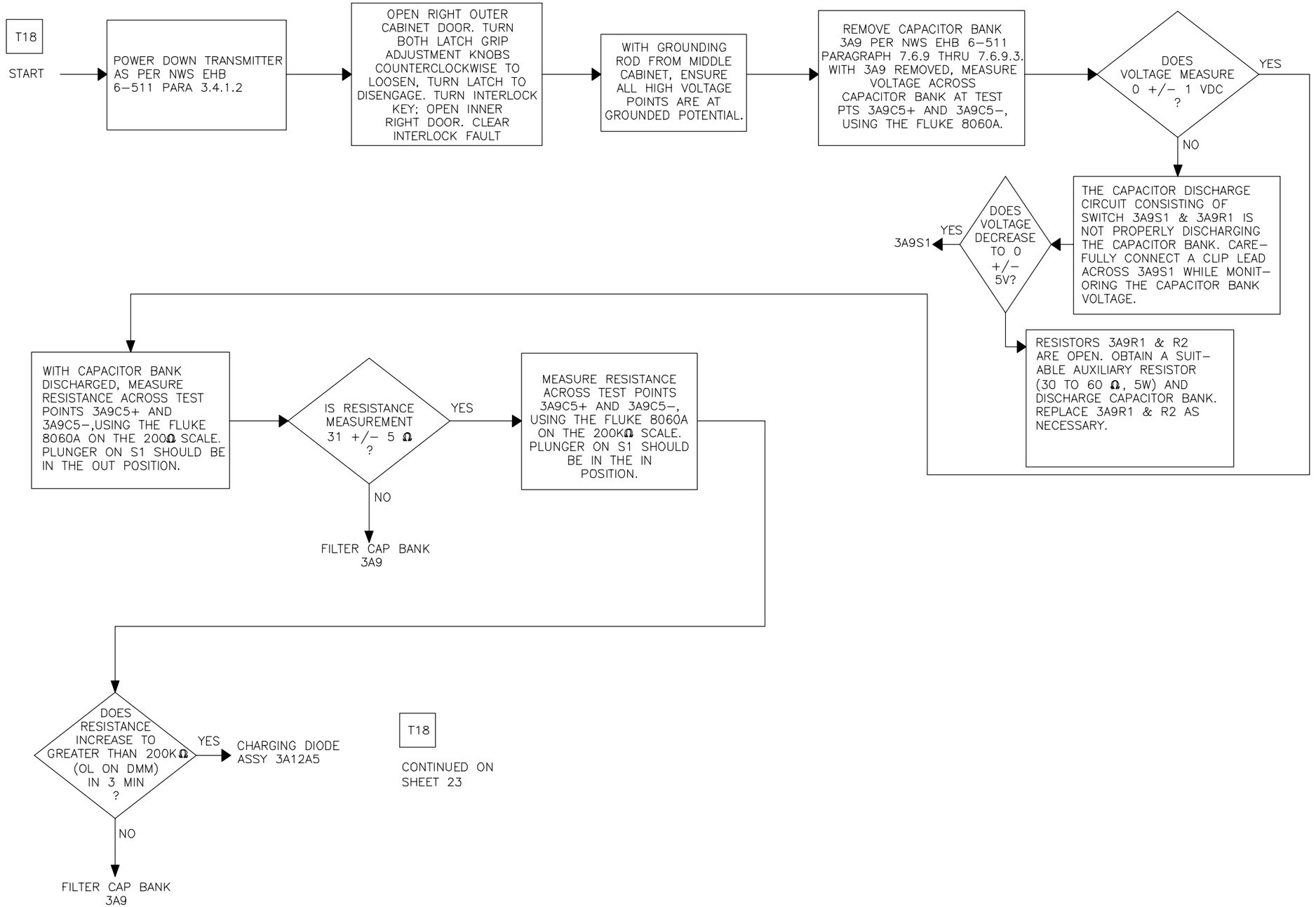


Figure 6-5. Transmitter Secondary Fault Isolation Flowchart (Sheet 22 of 39)

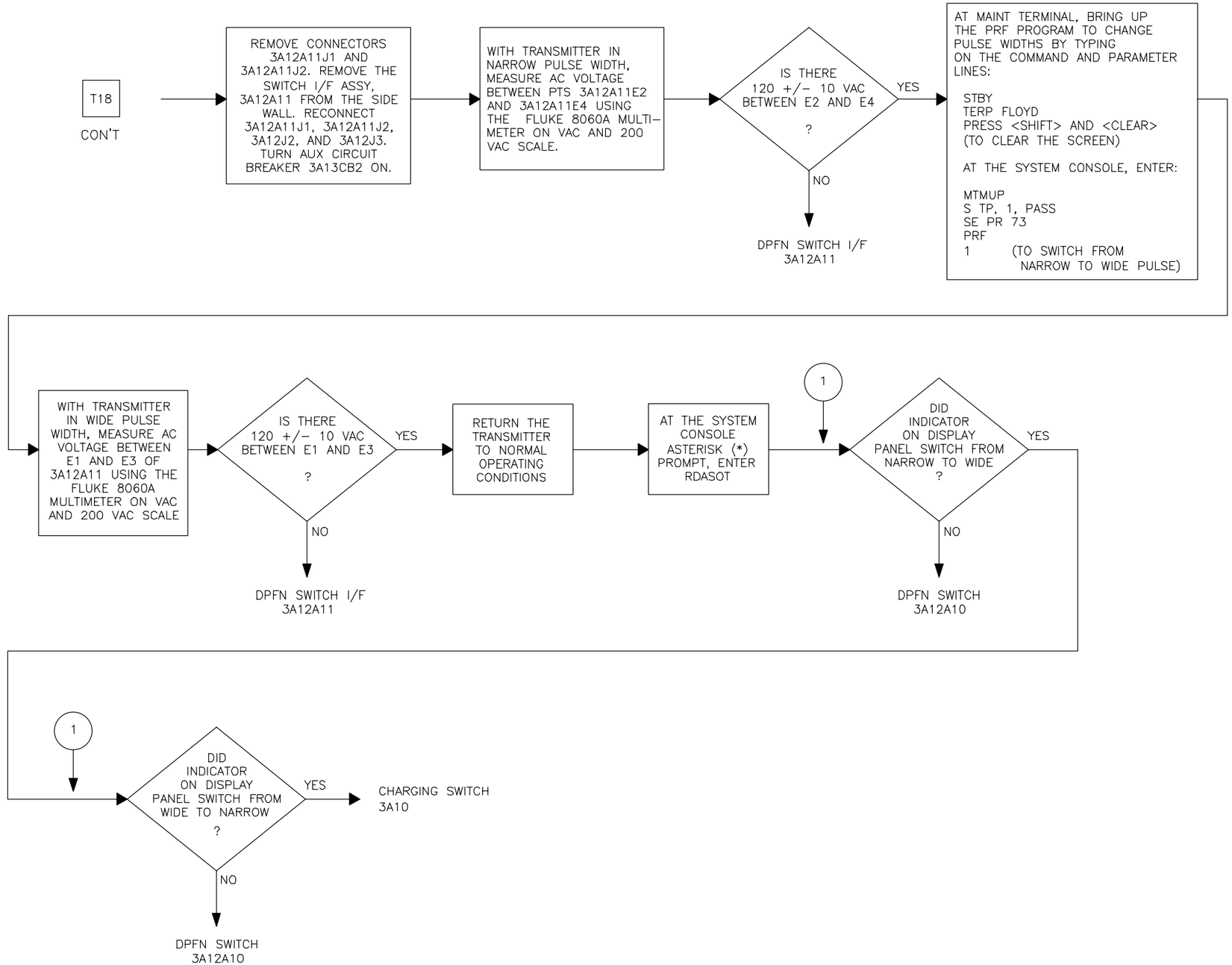


NX2081

Figure 6-5. Transmitter Secondary Fault Isolation Flowchart (Sheet 23 of 39)

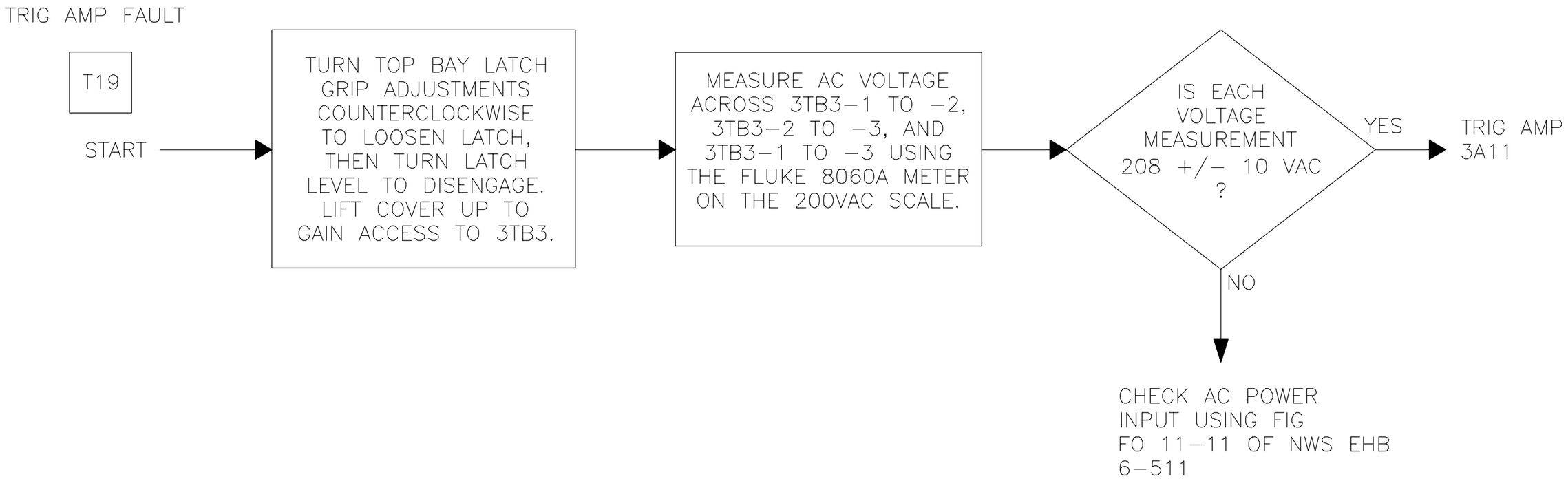


NX2082

Figure 6-5. Transmitter Secondary Fault Isolation Flowchart (Sheet 24 of 39)

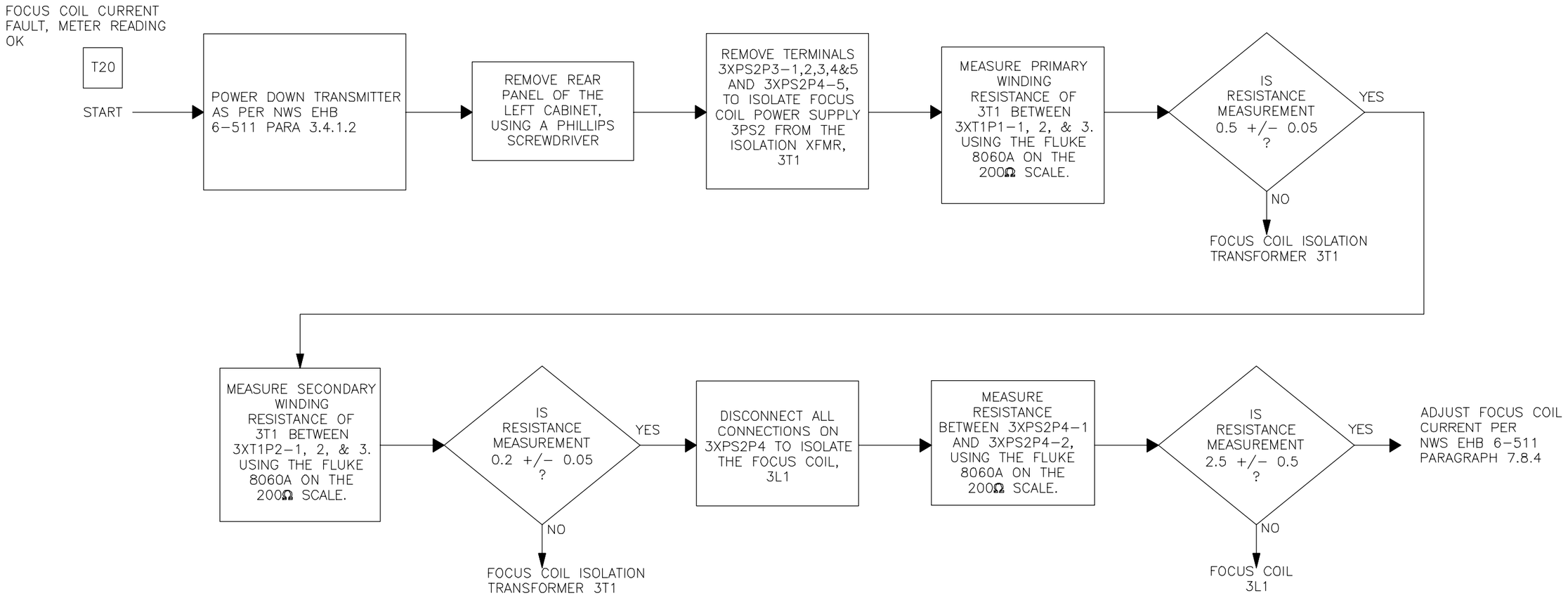


NX2083

Figure 6-5. Transmitter Secondary Fault Isolation Flowchart (Sheet 25 of 39)

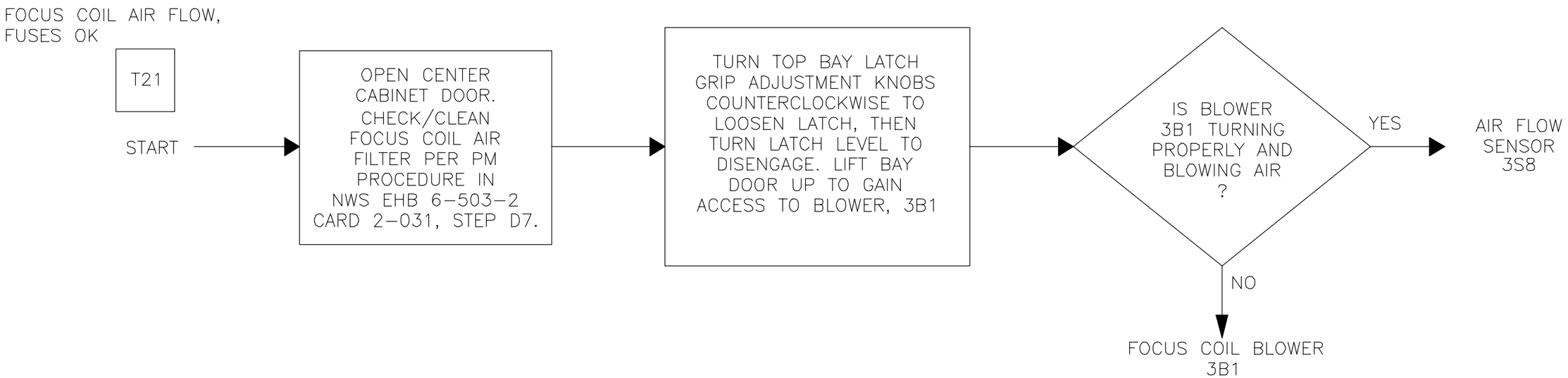


NX2084

Figure 6-5. Transmitter Secondary Fault Isolation Flowchart (Sheet 26 of 39)

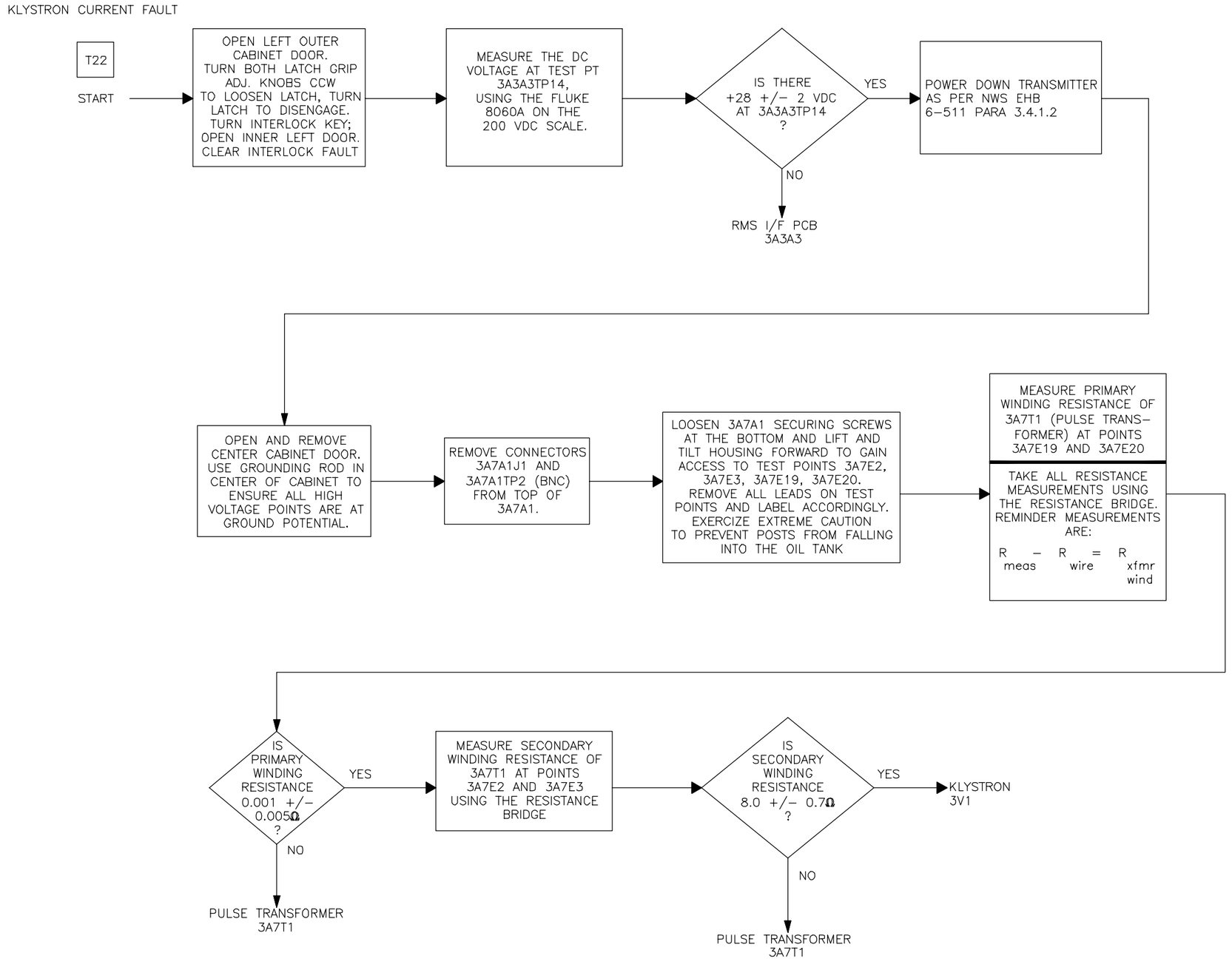


Figure 6-5. Transmitter Secondary Fault Isolation Flowchart (Sheet 27 of 39)

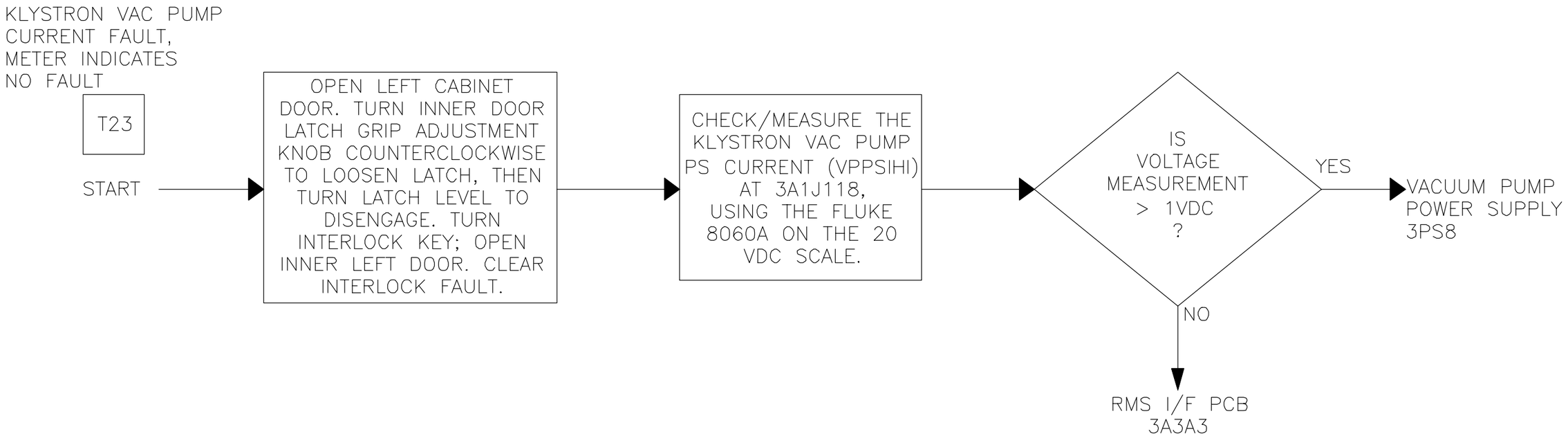


NX2086

Figure 6-5. Transmitter Secondary Fault Isolation Flowchart (Sheet 28 of 39)

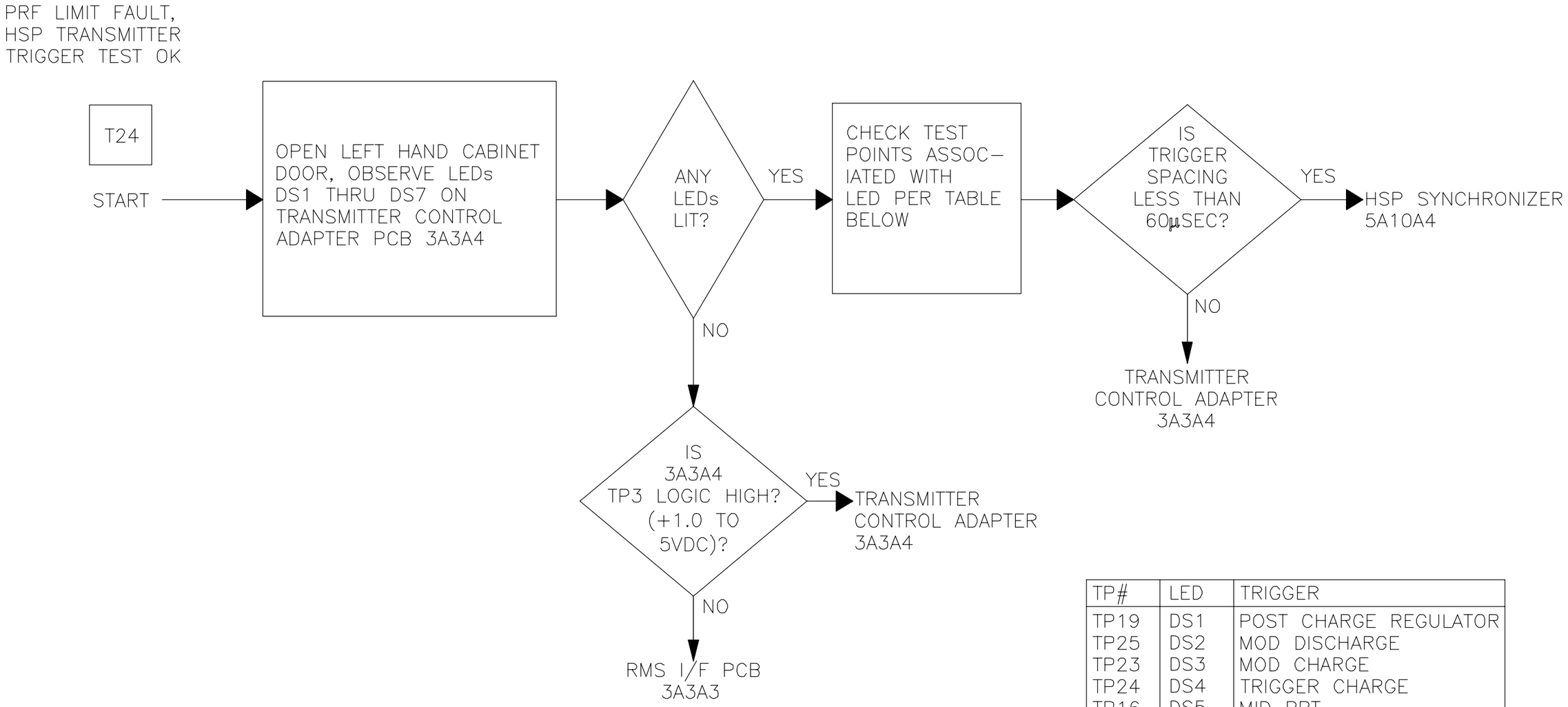


| TP# | LED | TRIGGER |
|---|---|---|
| TP19 | DS1 | POST CHARGE REGULATOR |
| TP25 | DS2 | MOD DISCHARGE |
| TP23 | DS3 | MOD CHARGE |
| TP24 | DS4 | TRIGGER CHARGE |
| TP16 | DS5 | MID PRT |
| TP17 | DS6 | RF DRIVER |
| TP12 | DS7 | RF GATE |

NX2087

Figure 6-5. Transmitter Secondary Fault Isolation Flowchart (Sheet 29 of 39)

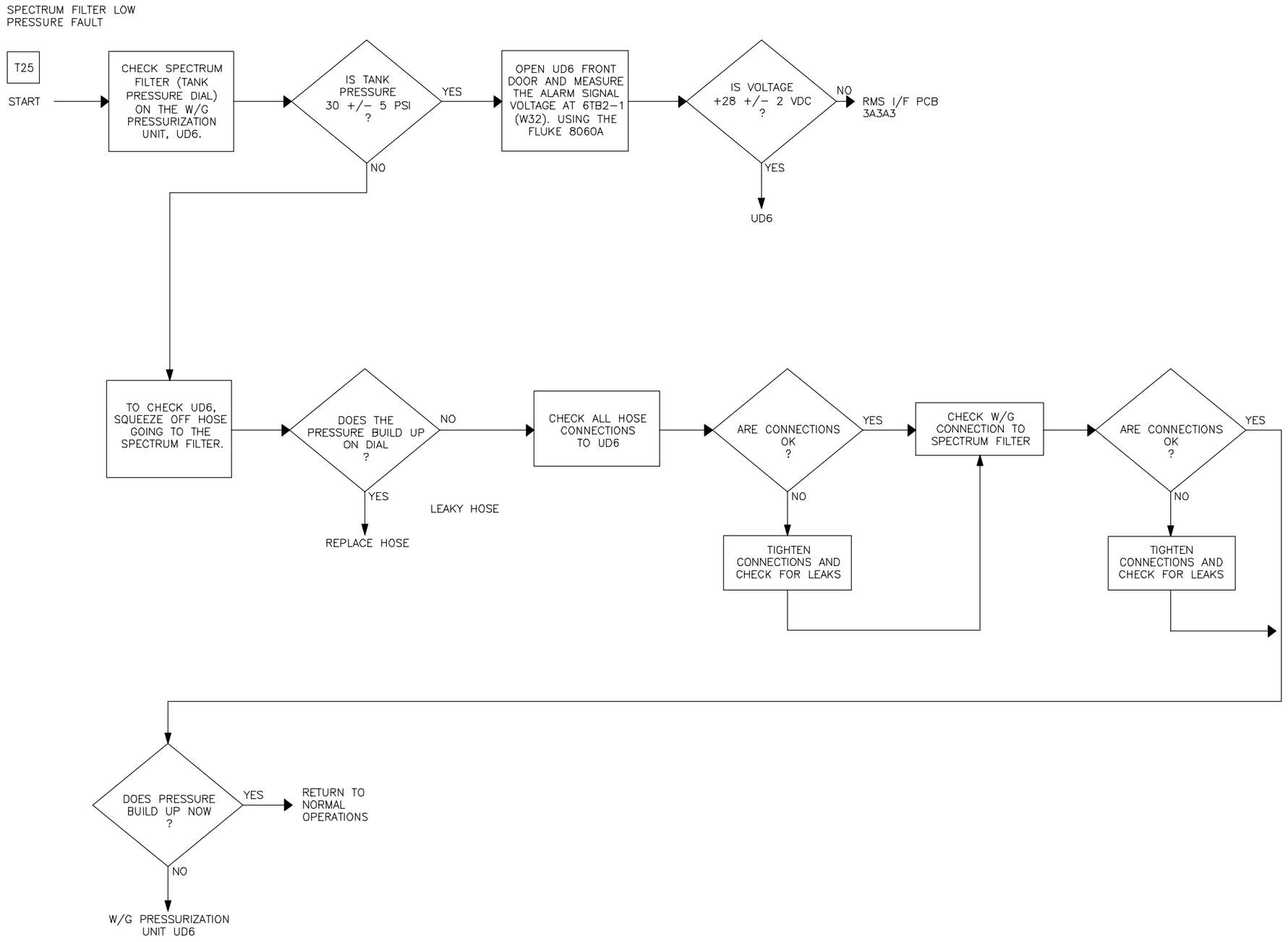


Figure 6-5. Transmitter Secondary Fault Isolation Flowchart (Sheet 30 of 39)

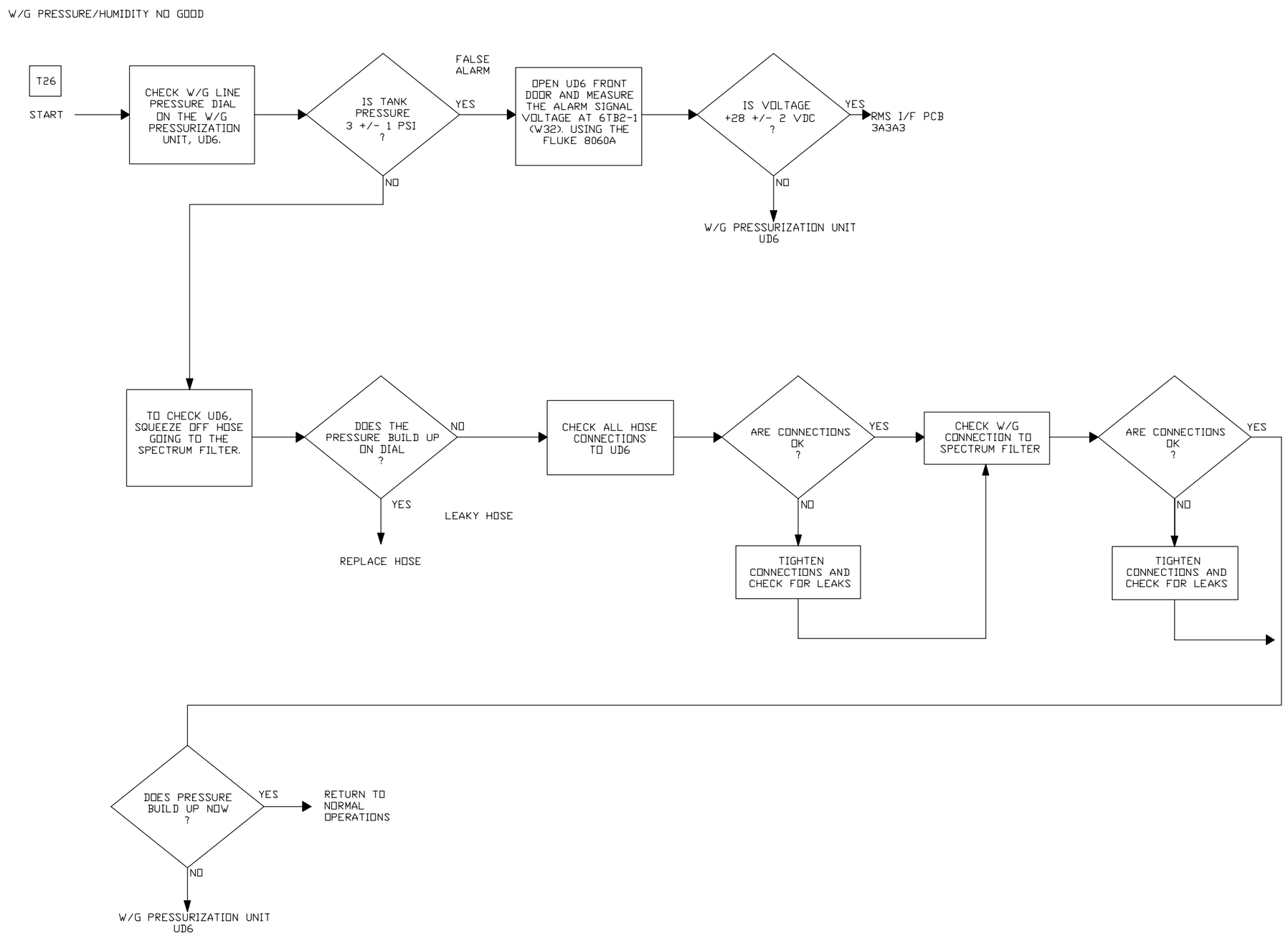


Figure 6-5. Transmitter Secondary Fault Isolation Flowchart (Sheet 31 of 39)

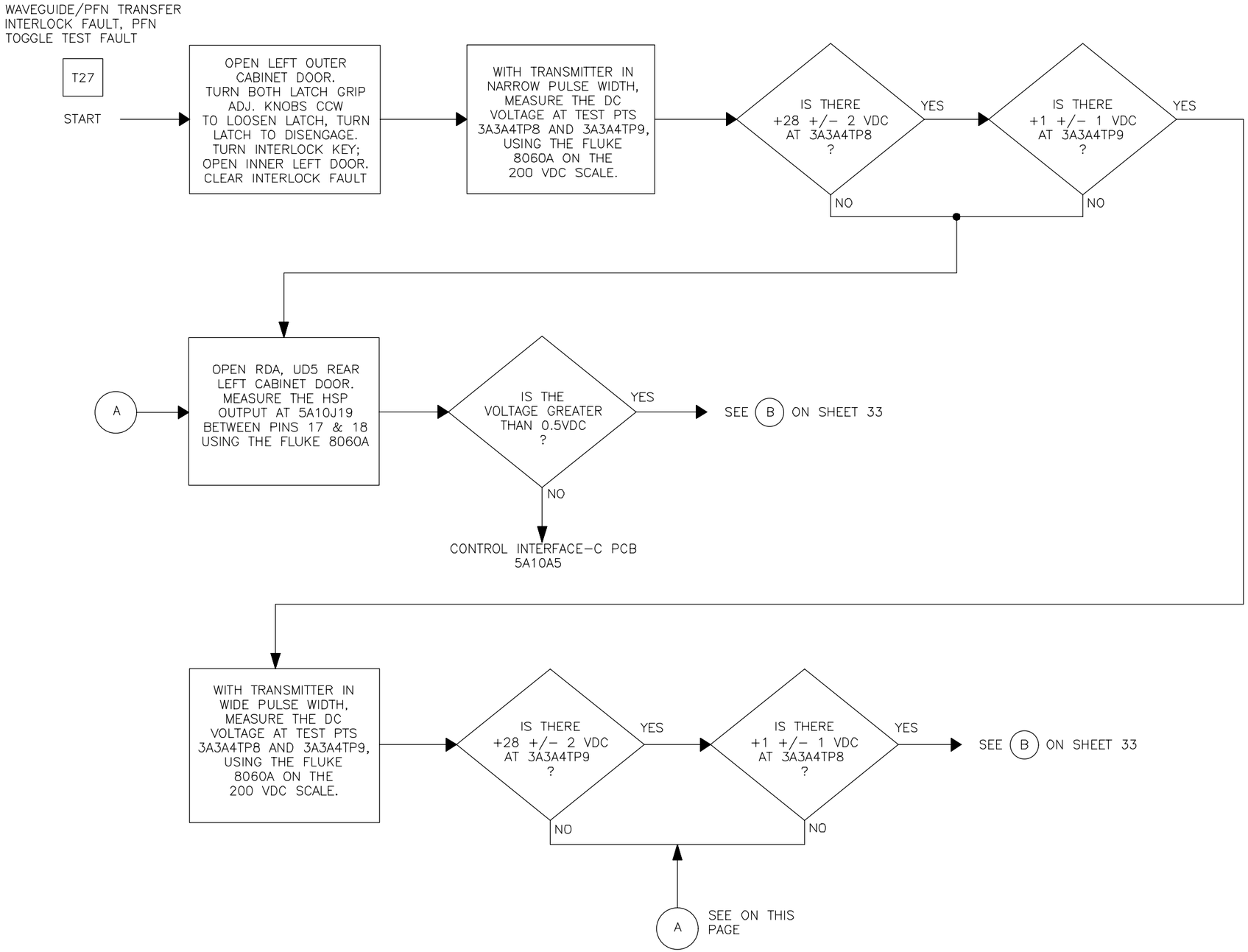


NX2090

Figure 6-5. Transmitter Secondary Fault Isolation Flowchart (Sheet 32 of 39)

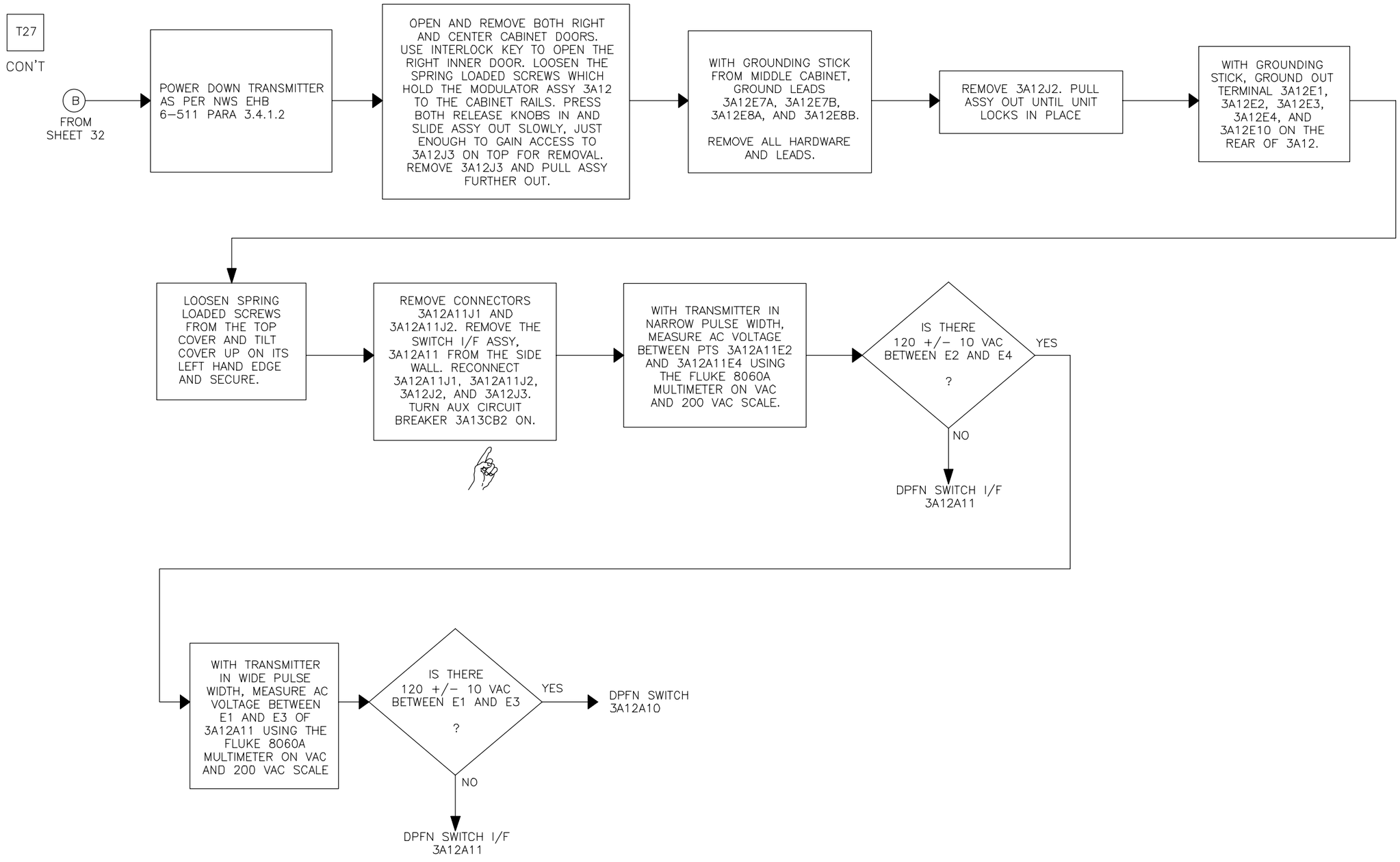


NX2091

Figure 6-5. Transmitter Secondary Fault Isolation Flowchart (Sheet 33 of 39)

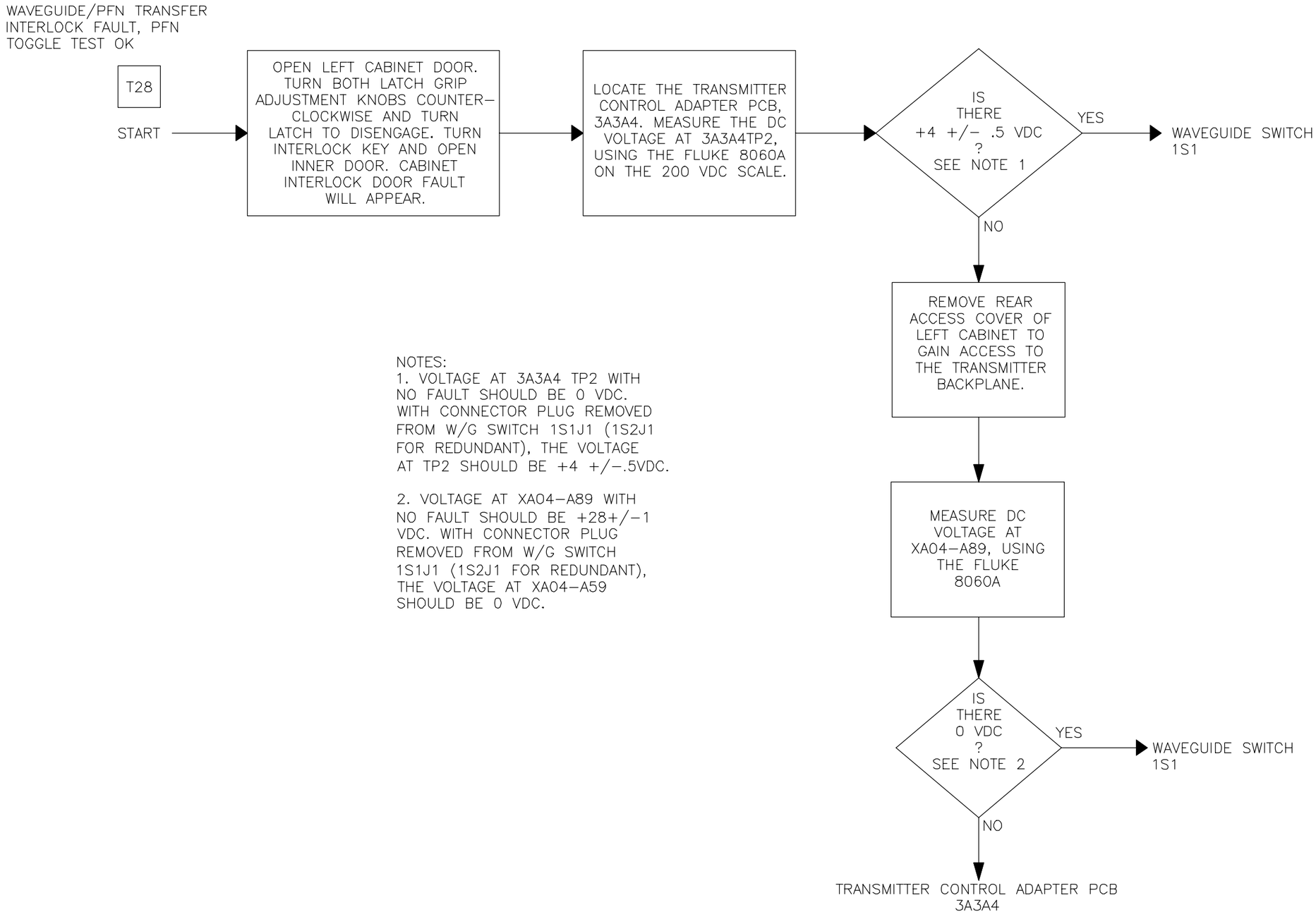


NX2092

Figure 6-5. Transmitter Secondary Fault Isolation Flowchart (Sheet 34 of 39)

XMTR OUTPUT LOW, XMTR INOP WITHOUT LIGHT ON,
KLYSTRON SAMPLE SUBTEST NO, RF DRIVER SUBTEST OK,
CURRENT SAMPLE OF HPDC NO.

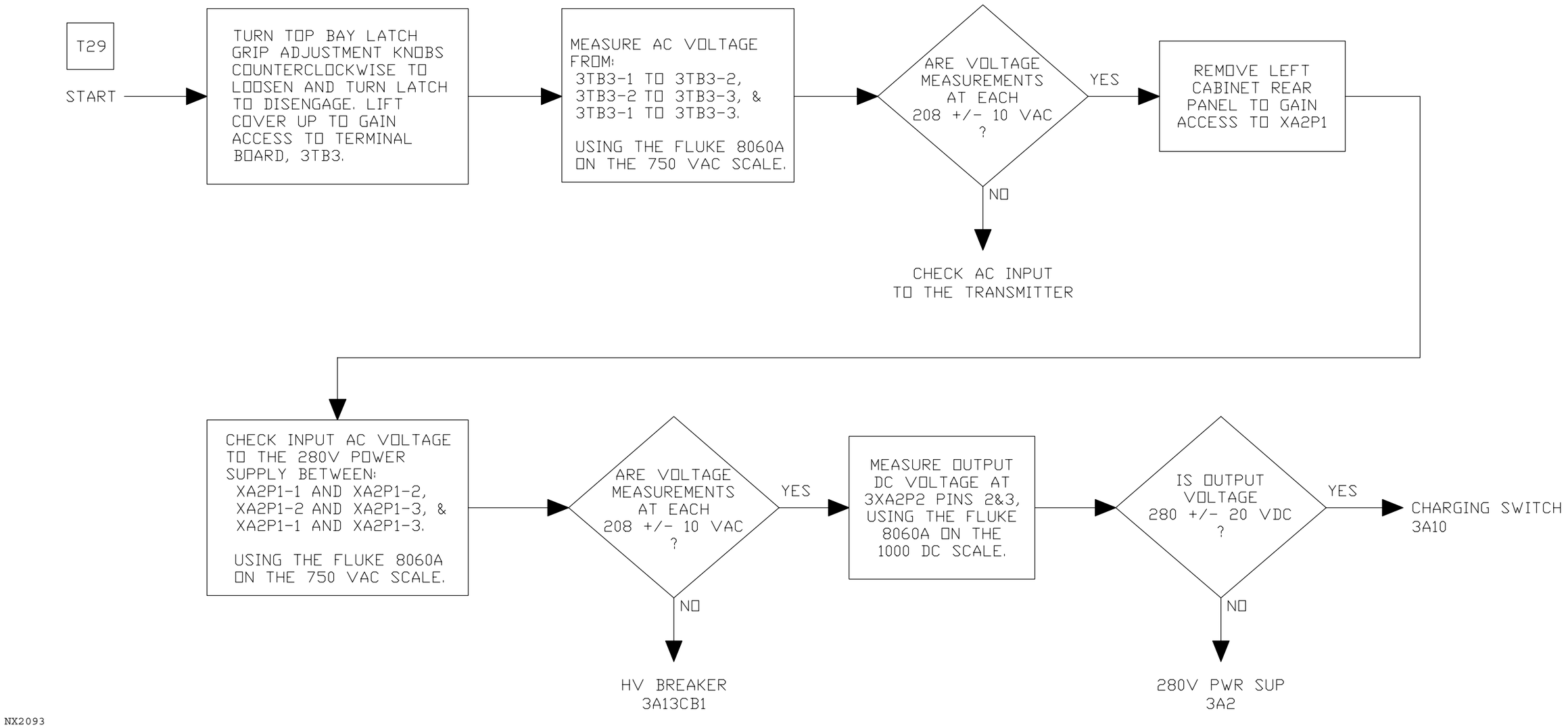


NX2093

Figure 6-5. Transmitter Secondary Fault Isolation Flowchart (Sheet 35 of 39)

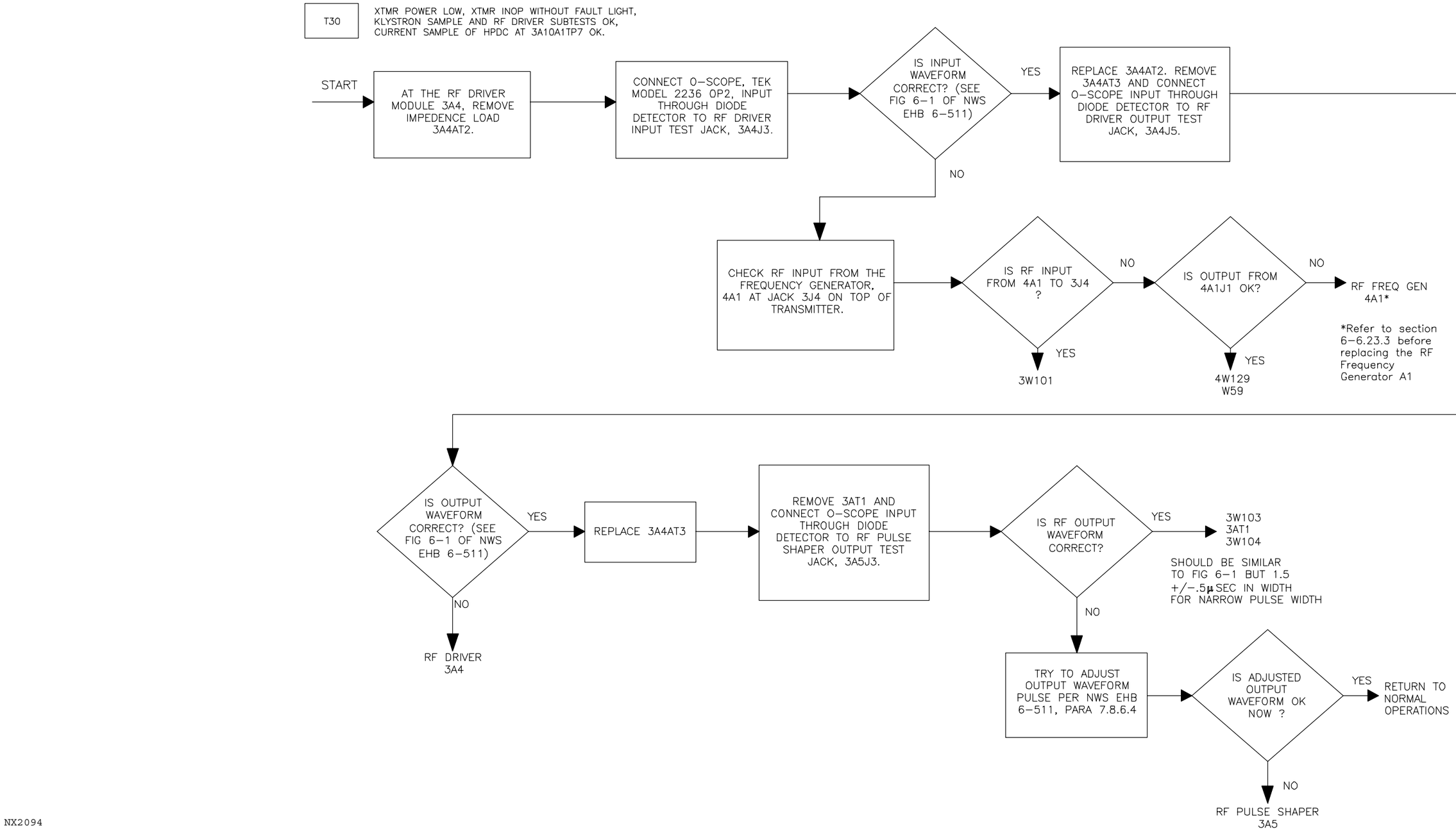


Figure 6-5. Transmitter Secondary Fault Isolation Flowchart (Sheet 36 of 39)

XTMR OUTPUT LOW, XMTR INOP WITHOUT LIGHT ON,
KLYSTRON SAMPLE SUBTEST OK, PROTECT CKT FAULT RESET OK.

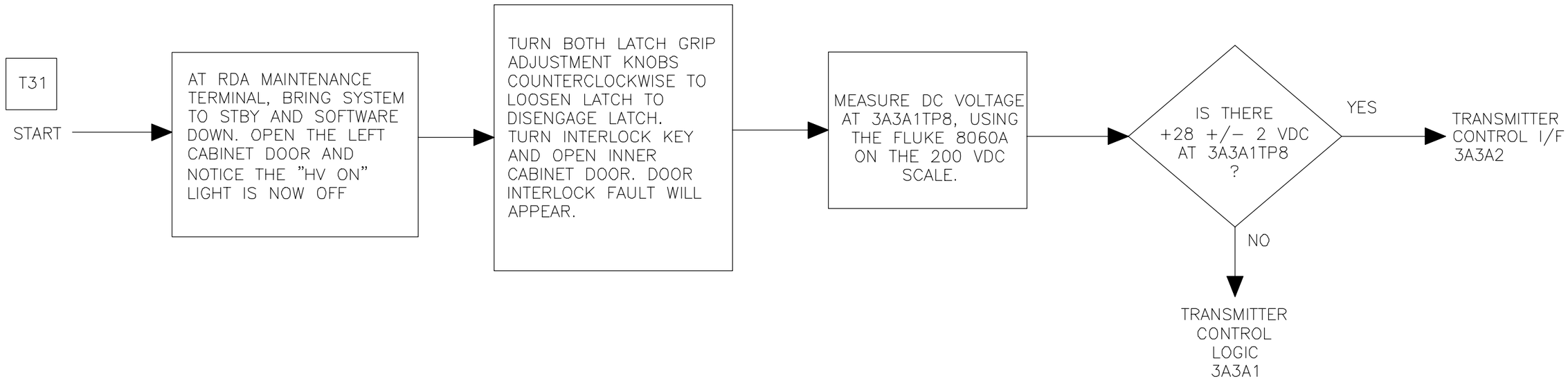


NX2095

Figure 6-5. Transmitter Secondary Fault Isolation Flowchart (Sheet 37 of 39)

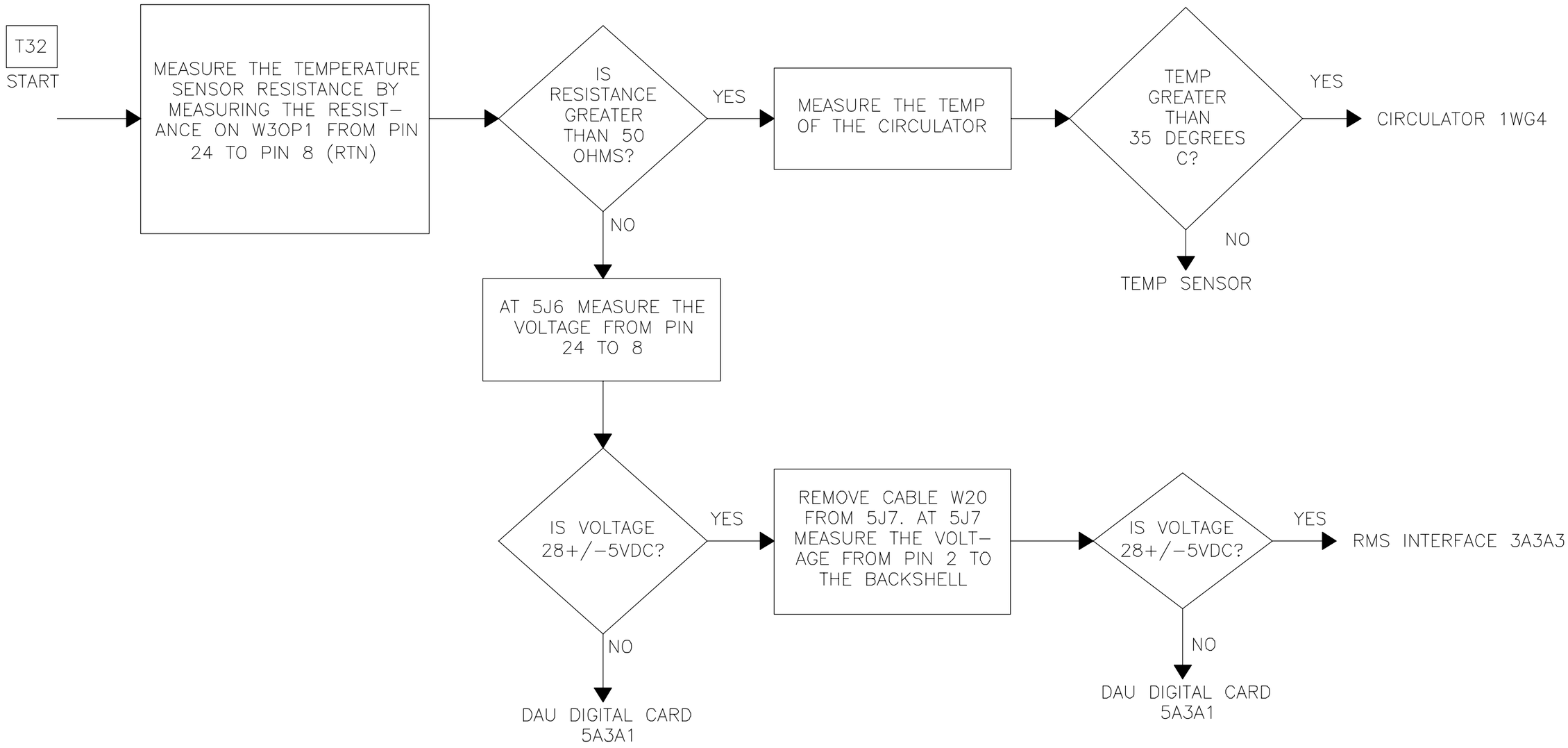


Figure 6-5. Transmitter Secondary Fault Isolation Flowchart (Sheet 38 of 39)

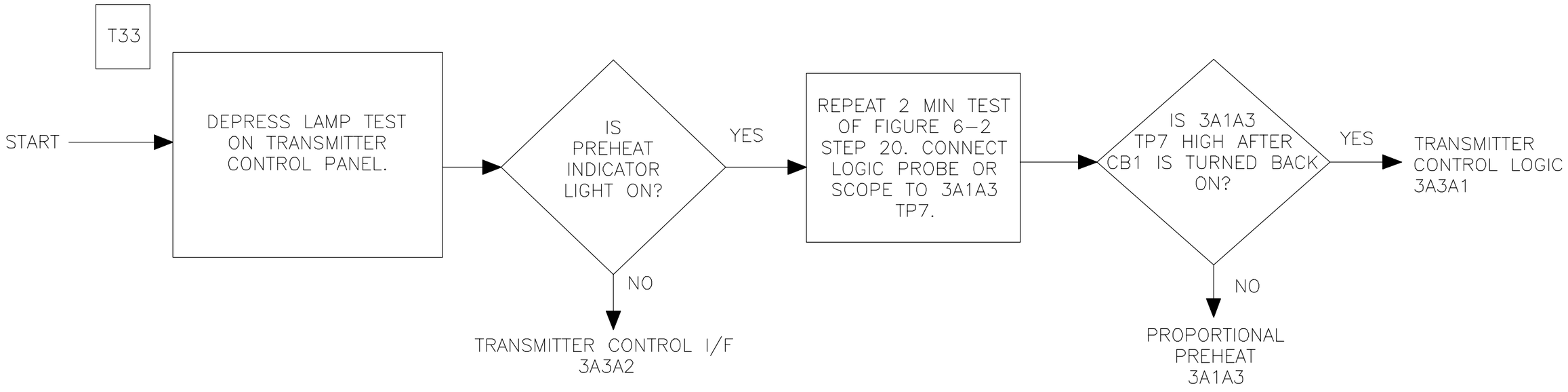


Figure 6-5. Transmitter Secondary Fault Isolation Flowchart (Sheet 39 of 39)

6-4.3 ANTENNA/PEDESTAL FUNCTIONAL GROUP.

The RDA primary fault isolation flowchart (Figure 6-2) references eight secondary fault isolation procedures for the ambiguous fault groups in the antenna/pedestal functional group. These procedures are designated ANT1 through ANT8 (enclosed in rectangles) and are described in the following paragraphs.

A digital multimeter (Fluke Model 8060A or equivalent) is required to perform these procedures.

6-4.3.1 ANT1. Refer to Figure 6-6, Antenna/Pedestal Secondary Flowchart.

6-4.3.2 ANT2. This ambiguous fault group consists of Power Supplies UD5A6PS1, UD5A6PS2, and UD5A6PS3; Analog Card UD5A6A1, and Digital Card UD5A6A2.

**NOTE**

Refer to Section 6-5 for applicable LRU replacement procedures.

1. At the Maintenance Panel UD5A2, set the Pedestal Electronics power switch to **OFF**.
2. At the Secondary PDP, set the Pedestal Motor power circuit breakers CB2, 4, and 6 to **OFF**.
   - Single-system sites, use Seconday PDP 7A3
   - FAA Redundant sites, use Seconday PDP #2 7A29
   - NWS Redundant sites, use Seconday PDP #3 7A30
3. Slide out and open the Digital Control Unit UD5A6 and remove connector J6 from Analog Card UD5A6A1 and J9 from Digital Card UD5A6A2.
4. At the Secondary PDP, set CB2, 4, and 6 to **ON**.
5. At the Maintenance Panel UD5A2, set the Pedestal Electronics power switch to **ON**.
6. Using multimeter, measure the voltages for the DCU power supplies UD5A6PS1, UD5A6PS2, and UD5A6PS3 between the following test points:

**NOTE**

UD5A6PS3 output voltage is site dependent. The level measured at UD5A6TB1 will be greater than +5 Vdc in order to equal +5 Vdc at UD2A1A1TB1. Refer to the proper Pedestal Maintenance manual for your site if UD5A6PS3 requires adjustment.

a. TB1-2 and GND (should be +5V)

b. TB1-8 and GND (should be +15V)

c. TB1-9 and GND (should be -15V)

d. TB1-10 and GND (should be +28V)

e. TB1-1 and GND (greater than +5V, PS3 output)

7. If the voltages in steps 6.a. through 6.c. cannot be adjusted to within ±10% of the specified voltages, UD5A6PS1 is faulty and must be replaced. If the voltage in step 6.d. cannot be adjusted to within ±10% of the specified voltage, then UD5A6PS2 is faulty and must be replaced. If the voltage in step 6.e. is below standards, perform the RDADP DCU Drawer UD5A6PS3 Adjustment procedure in NWS EHB 6-513 (LPP Sites) or NWS EHB 6-514 (FSP Sites). If all power supplies' voltages are within ±10% of the specified voltages, they are good. Proceed to step 8. If replacement is necessary, proceed to paragraph 6-5.44 .

8. Check for faulty Digital Card UD5A6A2 as follows:

   a. At Maintenance Panel UD5A2, set Pedestal Electronics power switch to **OFF**.

   b. At the appropriate Secondary PDP, set CB2, 4, and 6 to **OFF**.

   c. Reconnect J9 to Digital Card UD5A6A2.

   d. At Secondary PDP, set CB2, 4, and 6 to **ON**.

   e. At Maintenance Panel UD5A2, set Pedestal Electronics power switch to **ON**.

   f. Repeat steps 6.a, 6.b, 6.c, and 6.d as required.

   g. If voltages in step f are ±10% of specified voltages, the digital card is good. Proceed to step 9.

   h. If voltages in step f are not ±10% of specified voltages, replace Digital Card UD5A6A2.

9. Check for faulty Analog Card UD5A6A1 as follows:

   a. At Maintenance Panel UD5A2, set Pedestal Electronics power switch to **OFF**.

   b. At the appropriate Secondary PDP, set CB2, 4, and 6 to **OFF**.

   c. Reconnect J6 to Analog Card UD5A6A1.

   d. At Secondary PDP, set CB2, 4, and 6 to **ON**.

   e. At Maintenance Panel UD5A2, set Pedestal Electronics power switch to **ON**.

   f. Repeat steps 6.a, 6.b, or 6.c as required.

   g. If the voltages in step f are ±10% of specified voltage, the analog card is good.

   h. If voltages in step f are not ±10% of specified voltage, replace Analog Card UD5A6A1.

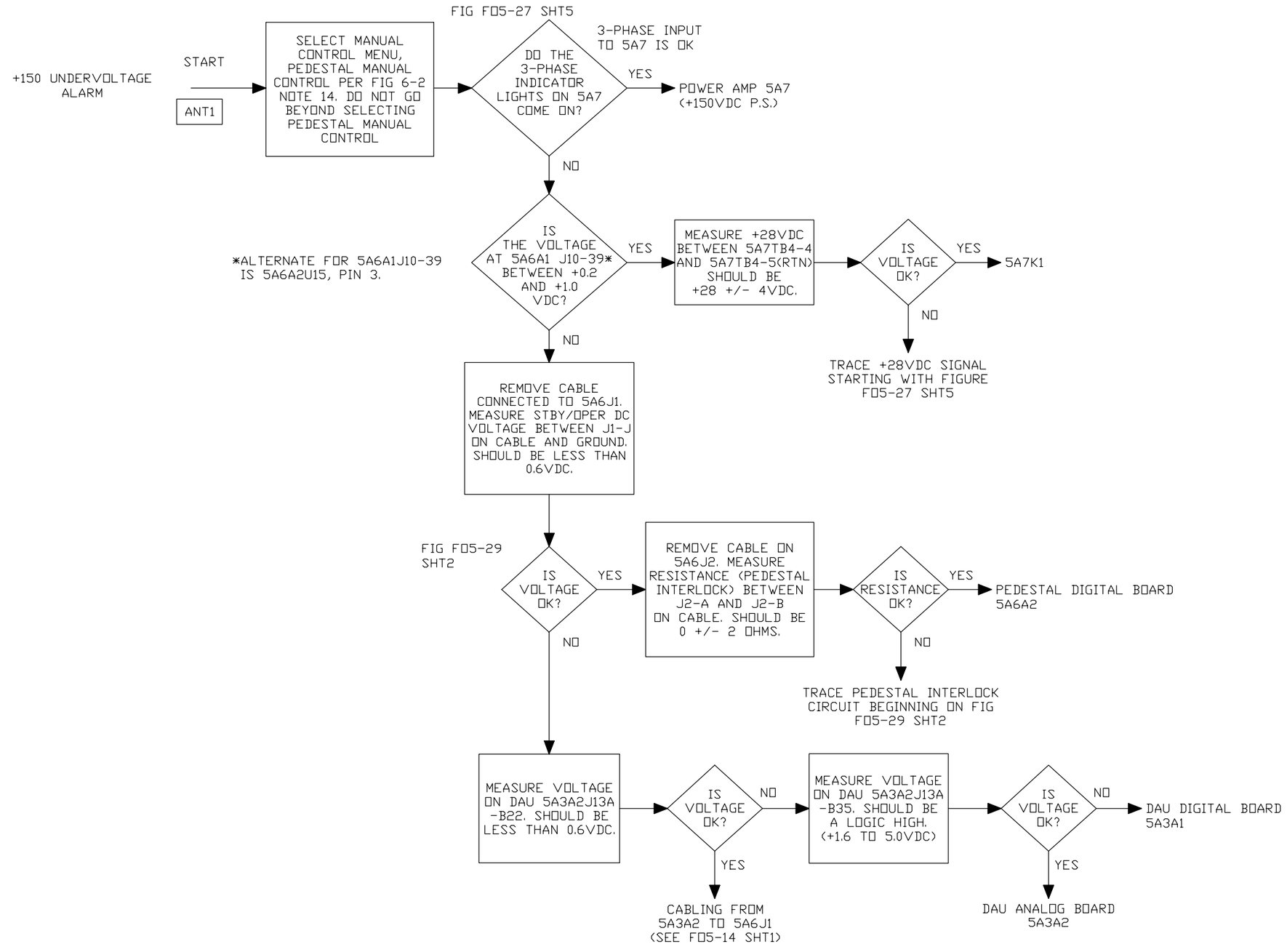


NX2098

Figure 6-6. Antenna/Pedestal Secondary Flowchart

6-4.3.3 ANT3. The following procedure is for the elevation stow pin error. For the azimuth stow pin error, make the following substitutions: UD2A1A3S2 (LPP) or UD2A1A3A8S1 (FSP) for UD2A1A1S3, S4; and UD2A1A3TB1 for UD2A1A1TB2.

1. On connector UD5J3, disconnect cable W4 and measure voltage between pin W and pin U (pin N and pin U for azimuth).
   a. If voltage is 5 ± 0.2 Vdc, proceed to step 2.
   b. If voltage is not 5 ± 0.2 Vdc, then measure the output from UD5A6A2J10 pin 15 to pin 8 for elevation, or from pin 42 to pin 8 for azimuth. If voltages are OK, then check connection between UD5J3 and UD5A6A2J10; if voltages are not OK, check digital board.
2. Go to pedestal and check to see whether stow pins UD2A1A1S3 and UD2A1A1S4 are engaged.
   a. If either stow pin is engaged, disengage the stow pin and return to normal operation.
   b. If neither stow pin is engaged, proceed to step 3.
3. At UD2A1A1TB2, measure the voltage between pin 1 and pin 2. If voltage is 5 ±0.2 Vdc, replace UD2A1A1S3.
4. At UD2A1A1TB2, measure the voltage between pin 2 and pin 4. If voltage is 5 ±0.2 Vdc, replace UD2A1A1S4.
5. For azimuth, measure the voltages between UD2A1A3TB1 pin 1 and pin 2. If voltage is 5 ±0.2 Vdc, replace UD2A1A3S2 (LPP) or UD2A1A3A8S1 (FSP).

6-4.3.4 ANT4.

1. Slide out Power Amplifier Unit UD5A7 and remove top cover.
2. Measure the phase-to-phase voltages of the 3ϕ power input (for the UD5A7 pedestal power amplifier) at UD5A7TB1-1, -2, and -3. (From top view, TB1 is located towards back center of unit.
   a. If voltages are not 208 ± 20 Vac, use wiring diagrams in Chapter 7 to troubleshoot AC distribution.
   b. If voltages are 208 ± 20 Vac, proceed to step 3.
3. At Maintenance Panel UD5A2, set Pedestal Electronics power switch to **OFF**.
4. At the Secondary PDP, set the Pedestal Motor Power circuit breakers CB2, 4, and 6 to **OFF**.
   - Single-system sites, use Seconday PDP 7A3
   - FAA Redundant sites, use Seconday PDP #2 7A29
   - NWS Redundant sites, use Seconday PDP #3 7A30

5. Locate diodes CR5 and CR6 (from top view, towards front on left wall).

6. With the multimeter on resistance scale, measure the forward and reverse resistance of diodes CR5 and CR6.

**NOTE**

Diode readings may depend on type meter used. With an 8060A multimeter, typical forward resistance is 600 ± 100 ohms, and reverse resistance will indicate an open. Any significant increase or decrease in forward resistance or a decrease in reverse resistance (less than 200k Ω) indicates a faulty diode.

7. Replace any faulty diodes.

6-4.3.5 ANT5.

1. Disconnect cable W4 from UD5J3.

2. At cable W4, use the multimeter to measure the resistance between M (interlock open) and t (RTN).

   a. If resistance is 0 ± 10 ohms, Digital Card UD5A6A2 is faulty. Replace faulty card. (Refer to Section 6-5 for applicable LRU replacement procedure.)

   b. If resistance is not 0 ± 10 ohms proceed to step 3.

3. Measure the resistance between UD2A1A3TB1-3 and -4.

   a. If resistance is 0 ± 10 ohms, problem is in cabling. Troubleshoot cabling using wiring diagrams in Chapter 7.

   b. If resistance is not 0 ± 10 ohms, switch UD2A1A3S5 is faulty. Replace faulty switch.

6-4.3.6 ANT6.

1. At the RDA System Console, enter:

| | | |
|---|---|---|
| a. | **RDASOT<Return>*** | |
| b. | **4<Return>** | To select Manual Control and Display Menu. |
| c. | **1<Return>** | To select Control Pedestal. |
| d. | **3<Return>** | To select Pedestal Manual Control. |
| e. | **4<Return>** | To select Command Elevation Rate. |
| f. | **4<Return>** | To set rate to 4 degrees/second. |

- - - - -

* The system may already be in RDASOT, if this is the case enter **Ø** until Main Menu appears.

2. Slide out Digital Control Unit UD5A6 and remove top cover.

3. Locate connector J12 in middle of Analog Card UD5A6A1 and measure voltage at J12-28 (EL RATE OUT) to J12-36 (GND).

**NOTE**

With a 4°/sec elevation drive commanded, the elevation motor will drive toward a limit stop. When it hits the normal limit, the drive reverses and it drives the other way. The normal indication at J12-28 is a negative DC voltage of -.9V ± 5V followed by a positive voltage of +.3 ± 5V when the motor reverses drive, then back to -.9V, etc. If the voltage does not change polarity within 30 sec, the Analog Card 5A6A1 is bad. If it does, proceed to step 4.

4. Disconnect cable 5W600 which connects to Choke Assembly UD5A25J1.

5. On cable 5W600, measure the resistance between pins D and E (EL MOTOR DRIVE).

   a. If resistance is 0 ± 10 ohms, the power amplifier's Elevation Amplifier UD5A7A2 is faulty.

   b. If resistance is not 0 ± 10 ohms, Elevation Motor UD2A1A1B1 is faulty.

6-4.3.7 ANT7.

1. At the RDA System Console, enter:

| | | |
|---|---|---|
| a. | **RDASOT<Return>*** | |
| b. | **4<Return>** | To select Manual Control and Display Menu. |
| c. | **1<Return>** | To select Control Pedestal. |
| d. | **3<Return>** | To select Pedestal Manual Control. |
| e. | **3<Return>** | To select Command Azimuth Rate. |
| f. | **2Ø<Return>** | For azimuth rate (20°/sec). |

- - - - -

* The system may already be in RDASOT, if this is the case enter **Ø** until Main Menu appears.

2. Slide out Digital Control Unit UD5A6 and remove top cover.

3. Locate connector J12 in the middle of Analog Card UD5A6A1 and measure voltage at J12-14 (AZ RATE OUT) to J12-36 (GND).

   a. If voltage is 0.9 ± 0.3 Vdc, proceed to step 4.

   b. If voltage is not 0.9 ± 0.3 Vdc, Analog Card UD5A6A1 is faulty. Replace faulty card.

4. Disconnect cable 5W600 which connects to Choke Assembly UD5A25J1.
5. On cable 5W600, measure the resistance between pins B and C (AZ MOTOR DRIVE).
   a. If resistance is 0 ± 10 ohms, the power amplifier's Azimuth Amplifier UD5A7A1 is faulty. Replace faulty unit.
   b. If resistance is not 0 ± 10 ohms, Azimuth Motor UD2A1A3B1 is faulty. Replace faulty unit.

6-4.3.8 ANT8.

1. Remove the cable which plugs into the Digital Control Unit UD5A6J2.
2. Connect the lead from the Logic Probe marked with a red dot to UD5A6J2-A (+5 Vdc). Connect the other power lead to UD5A6J2-B (+5 Vdc RTN).
3. Connect the probe to the following points on UD5A6J2 and note the condition of the light indicator.

| UD5A6J2 Pin | Signal Name |
|---|---|
| P | AZ ENCDR CLK |
| Q | AZ ENCDR CLK NOT |
| m (M lower case) | AZ ENCDR INTRG |
| n (N lower case) | AZ ENCDR INTRG NOT |

4. All of the measured signals should cause the probe to flash, indicating the signal is changing state. If any or all fail to flash, the Digital Card UD5A6A2 is faulty.
5. If all four signals flash, the AZ Encoder Assembly UD2A1A3A1 is faulty.

## 6-4.4 RECEIVER FUNCTIONAL GROUP.

The RDA primary fault isolation flowchart (Figure 6-2) references 12 secondary fault isolation procedures for the ambiguous fault groups in the receiver functional group. These procedures are designated R1 through R12 (enclosed in rectangles) and are described in the following paragraphs. A digital multimeter (Fluke Model 8060A or equivalent) and a logic probe (HP545A or equivalent) are required to perform these procedures.

6-4.4.1 R1. This ambiguous fault group consists of a power supply and its associated loads. Refer to Table 6-7 for the associated load cables and load connections.

1. At the Secondary PDP UD7A3, set the receiver circuit breaker CB22 and the signal processor circuit breakers CB16 and 18 to **OFF**. (Redundant sites use appropriate Secondary PDP for channel being troubleshot, UD7A3 for Channel 1 and UD7A29 for Channel 2).
2. Disconnect all associated load cables at the load connections (refer to Table 6-7).
3. At the Secondary PDP (UD7A3 or UD7A29), set the receiver circuit breaker CB22 to **ON**.

4. Measure voltage at power supply.

**NOTE**

Refer to Section 6-5 for applicable LRU replacement procedures.

a. If voltage is not within 10% of specified voltage, power supply is faulty. Replace power supply.

b. If voltage is within 10% of specified voltage, one of the associated loads is faulty. Proceed to step 5.

5. Check for faulty associated load as follows:

a. At the Secondary PDP, set the receiver circuit breaker CB22 to **OFF**.

b. Reconnect load cables one at a time, turning on receiver circuit breaker and checking power supply output each time a cable is reconnected. When measured voltage is not within 10% of specified voltage, the last load connected is faulty.

Table 6-7. LVPS Loads

| Power Supply | Load Cables | Load Connection |
|---|---|---|
| PS1 (± 18V) | 4W401 | UD4A22J8 |
| | 4W402 | UD4A24J5 |
| | 4W403 | UD4A28J11 |
| | 4W404 | UD4A27J11 |
| | 4W413 | UD4J2 |
| | 4W500 | UD4A8J4 |
| | 4W501 | UD4A9J5 |
| | 4W502 | UD4A10J8 |
| | 4W503 | UD4A12J7 |
| | 4W504 | UD4A13J11 |
| | 4W505 | UD4A1J6 |
| | 4W506 | UD4A5J8 |
| | 4W508 | UD4A29J3 |
| | 4W509 | UD4A14J6 |
| | 4W510 | UD4A17J7 |
| | 4W511 | UD4A18J7 |
| | 4W512 | UD4A19J6 |
| | 4W513 | UD4A30J3 |
| | 4W514 | UD4A31J3 |

Table 6-7. LVPS Loads (continued)

| Power Supply | Load Cables | Load Connection |
|---|---|---|
| | 4W900 | UD4A37J1 |
| PS2 (+5V) | 4W516 | UD4A11J4 |
| | 4W900 | UD4A37J1 |
| PS4 (-9V) | 4W401 | UD4A22J8 |
| | 4W402 | UD4A24J5 |
| | 4W504 | UD4A13J11 |
| | 4W505 | UD4A1J6 |
| | 4W507 | UD4A23J5 |
| | 4W514 | UD4A31J3 |
| | 4W900 | UD4A37J1 |
| PS5 (+5V) | 4W505 | UD4A1J6 |
| | 4W507 | UD4A23J5 |
| | 4W402 | UD4A25J2 |
| | 4W500 | UD4A8J4 |
| | 4W512 | UD4A19J6 |
| | 4W514 | UD4A31J3 |
| | 4W515 | UD4A32J3 |
| | 4W504 | UD4A13J11 |
| | 4W900 | UD4A37J1 |
| PS6 (+9V) | 4W500 | UD4A8J4 |
| | 4W505 | UD4A1J6 |
| | 4W507 | UD4A23J5 |
| | 4W900 | UD4A37J1 |
| PS7 (-5.2V) | 4W516 | UD4A11J4 |
| | 4W900 | UD4A37J1 |
| PS8 (±15V) | 4W516 | UD4A11J4 |
| | 4W900 | UD4A37J1 |
| PS9 (+5v) | 4W401 | UD4A22J8 |
| | 4W402 | UD4A24J5 |
| | 4W403 | UD4A28J11 |
| | 4W404 | UD4A27J11 |
| | 4W518 | UD4A32J6 |
| | 4W900 | UD4A37J1 |

6-4.4.2 R2. This fault group consists of the Receiver Interface UD4A32 and the RF/IF Test Monitor UD4A31.

**NOTE**

The procedure assumes that RDASOT is loaded and RECVDIAG Test Control Menu is displayed at the RDA System Console. Refer to EHB 6-510-2, RDASOT User's Guide, for an explanation of the RDASOT subtest.

1. At the RDA System Console enter:

| | |
|---|---|
| a. **4<Return>** | To Deselect All Subtests. |
| b. **5<Return>** | To Select Individual Subtests. |
| c. **1<Return>** | To select Subtests 1 thru 10. |
| d. **7<Return>** | To select Subtest 7 - 4 Position Diode Switch. Note `SELECTED` is displayed for Subtest 7. |
| e. **Ø<Return>** | To select Return to Subtest Menu. |
| f. **Ø<Return>** | To select Subtest Selection Complete. |
| g. **1<Return>** | To Begin Subtest Execution. |

2. If subtest 7 passes, replace RF/IF Test Monitor UD4A31. If subtest 7 fails, replace Receiver Interface UD4A32.

6-4.4.3 R3. This fault group consists of the 10-position IF Test Switch UD4A28, the IF Log Amplifier Detector UD4A30, and the RF/IF Test Monitor UD4A31.

**NOTE**

This procedure assumes that RDASOT is loaded and RECVDIAG Test Control Menu is displayed at the RDA System Console. Refer to EHB 6-510-2, RDASOT User's Guide, for an explanation of the RDASOT subtest.

1. At the RDA System Console enter:

| | |
|---|---|
| a. **4<Return>** | To Deselect All Subtests. |
| b. **5<Return>** | To Select Individual Subtests. |
| c. **1<Return>** | To select Subtests 1 thru 10. |
| d. **3<Return>** | To select Subtest 3 - COHO RF Signal. Note `SELECTED` is displayed for Subtest 3. |
| e. **Ø<Return>** | To select Return to Subtest Menu. |

| | | |
|---|---|---|
| f. | **Ø<Return>** | To select Subtest Selection Complete. |
| g. | **2<Return>** | To select Display/Modify Options. |
| h. | **1<Return>** | To select Error Control Options (Stop). |
| i. | **2<Return>** | To select Continue on Error. |
| j. | **2<Return>** | To select Error Display Options (On). |
| k. | **2<Return>** | To select No Error Message Display. |
| l. | **3<Return>** | To select Loop Control Selection. |
| m. | **1ØØ<Return>** | For Loop Count. |
| n. | **Ø<Return>** | For return to RECVDIAG Test Control Menu. |

2. Locate IF Log Amplifier Detector UD4A30 on the inside of the rear receiver door and remove cable W311 from UD4A30J2.
3. At the RDA System Console, enter **1<Return>** to begin subtest execution.
4. Using multimeter, measure the IF Log Amplifier Detector DC output voltage at UD4A30J2 and compare this voltage to the output value of Figure 6-7.
5. To find the IF input, make the following entries at the RDA System Console:

| | | |
|---|---|---|
| a. | **2<Return>** | To Display/Modify Options. |
| b. | **1<Return>** | For Error Control Options. |
| c. | **3<Return>** | For Stop on Error. |
| d. | **2<Return>** | For Error Display Options. |
| e. | **1<Return>** | For Display Error Messages. |
| f. | **3<Return>** | For Loop Control Selection. |
| g. | **1<Return>** | For Loop Count. |
| h. | **Ø<Return>** | To return to RECVDIAG Test Control Menu. |
| i. | **1<Return>** | To begin subtest execution. |

   When the subtest fails, the value next to EXPECTED = is the value for IF input.

6. If the measure voltage does not agree with the video output value, proceed to step 8.
7. If the measured voltage agrees with the video output value, the RF/IF Test Monitor UD4A31 is faulty. Replace UD4A31.
8. Reconnect W311 to UD4A30J2.

9. On the 10-Position IF Test Switch UD4A28, remove cable W220 UD4A28J5.
10. On the IF Log Amplifier Detector UD4A30, remove cable W221 from UD4A30J1.
11. Connect cable W220 to UD4A30J1.
12. At the RDA System Console, enter **1<Return>** to begin subtest execution.
13. If Subtest 3 passes, IF Test Switch UD4A28 is faulty. Replace UD4A28.
14. If Subtest 3 fails, IF Log Amplifier Detector UD4A30 is faulty. Replace UD4A30.
15. Reconnect cables removed in steps 9 and 10.

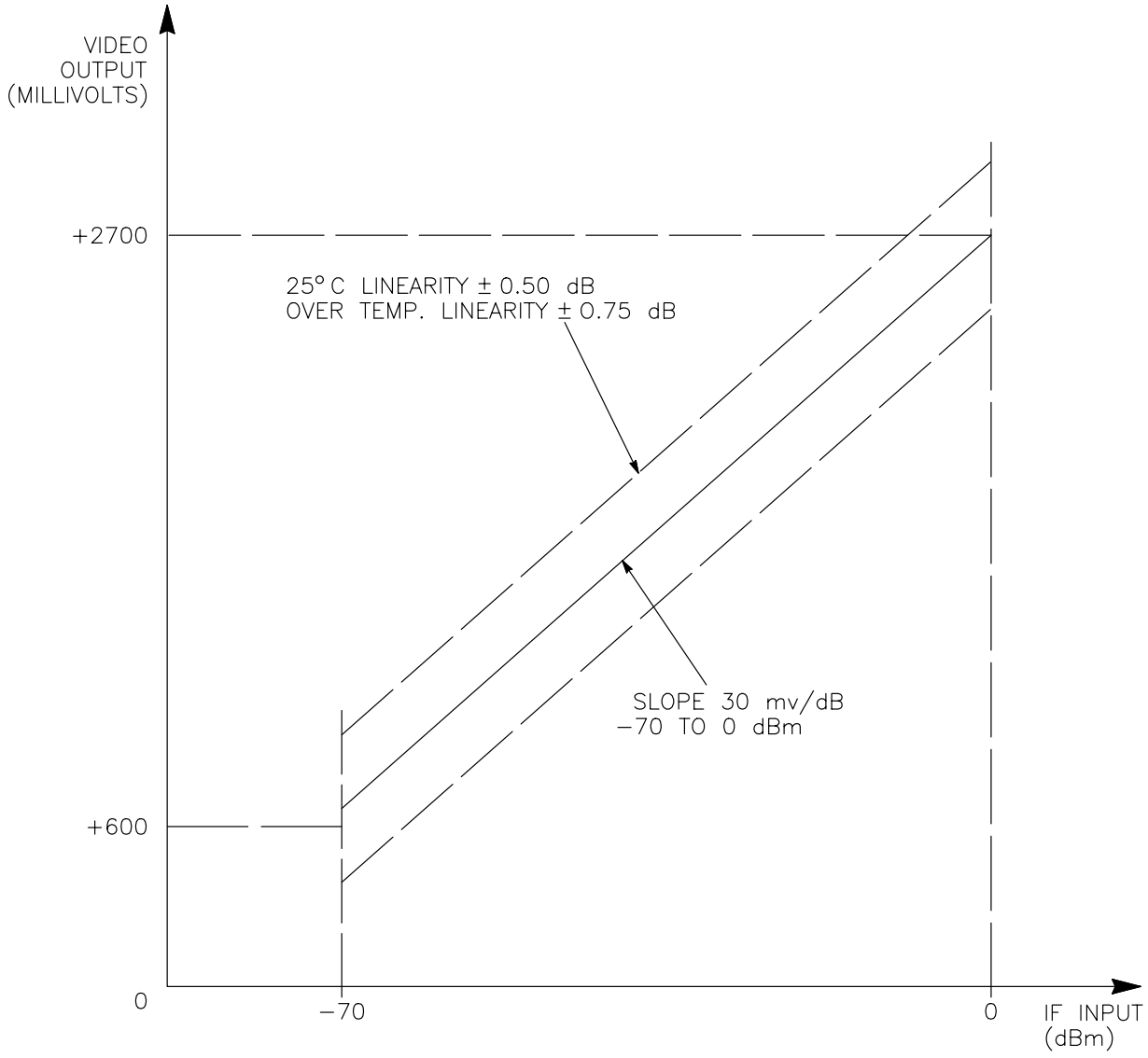


NX2099

Figure 6-7. Video Output Versus IF Input

6-4.4.4 R4. This fault group consists of the RF/IF Test Monitor UD4A31, the 10-Position RF Test Switch UD4A27, and the RF Log Amplifier Detector UD4A29.

**NOTE**

This procedure assumes that RDASOT is loaded and RECVDIAG Test Control Menu is displayed at the RDA System Console. Refer to EHB 6-510-2, RDASOT User's Guide, for an explanation of the RDASOT subtest.

1. At the RDA System Console, enter:

| | |
|---|---|
| a. **4<Return>** | To Deselect All subtests. |
| b. **5<Return>** | To Select Individual Subtests. |
| c. **2<Return>** | To select Subtests 11 thru 20. |
| d. **1<Return>** | To select Subtest 11 - STALO RF TEST. Note `SELECTED` is displayed by Subtest 11. |
| e. **Ø<Return>** | To select Return to Subtest Menu. |
| f. **Ø<Return>** | To select Subtest Selection Complete. |
| g. **2<Return>** | To select Display/Modify Options. |
| h. **1<Return>** | To select Error Control Options. |
| i. **2<Return>** | To select Continue on Error. |
| j. **2<Return>** | To select Error Display Options. |
| k. **2<Return>** | To select No Error Message Display. |
| l. **3<Return>** | To select Loop Control Selection. |
| m.**1ØØ<Return>** | For Loop Count. |
| n. **Ø<Return>** | To return to RECVDIAG Test Control Menu. |

2. Locate the RF Log Amplifier Detector UD4A29 on the inside of the rear receiver door and remove cable W310 from UD4A29J2.
3. At the RDA System Console, enter **1<Return>** to begin subtest execution.
4. Using multimeter, measure the RF Log Amplifier Detector DC voltage at UD4A29J2 and compare this voltage to the output value of Figure 6-8.
5. To find the RF input, make the following entries at the RDA System Console:

| | |
|---|---|
| a. **2<Return>** | To select Display/Modify Options. |
| b. **1<Return>** | To select Error Control Options. |

| | | |
|---|---|---|
| c. | **3<Return>** | To select Stop On Error. |
| d. | **2<Return>** | To select Error Display Options. |
| e. | **1<Return>** | To select Display Error Messages. |
| f. | **3<Return>** | To select Loop Control Selection. |
| g. | **1<Return>** | For Loop Count. |
| h. | **Ø<Return>** | To return to RECVDIAG Test Control Menu. |
| i. | **1<Return>** | To Begin Subtest Execution. |

When the subtest fails, the value next to EXPECTED = is the value for RF input.

6. If the measured voltage does not agree with the video output value, proceed to step 8.
7. If the measured voltage agrees with the video output value, the RF/IF Test Monitor UD4A31 is faulty. Replace UD4A31.
8. Reconnect W310 to UD4A29J2.
9. Remove cable W116 from Mixer Preamplifier UD4A5J6.
10. On the RF Log Amplifier Detector UD4A29, remove cable W123 from UD4A29J1.
11. Connect a cable from UD4A5J6 to UD4A29J1. (A piece of test cable is necessary.)
12. At the RDA System Console, enter **1<Return>** to begin subtest execution.
13. If Subtest 11 passes, RF Test Switch UD4A27 is faulty. Replace UD4A27.
14. If Subtest 11 fails, RF Log Amplifier Detector UD4A29 is faulty. Replace UD4A29.
15. Reconnect cables removed in steps 9 and 10.

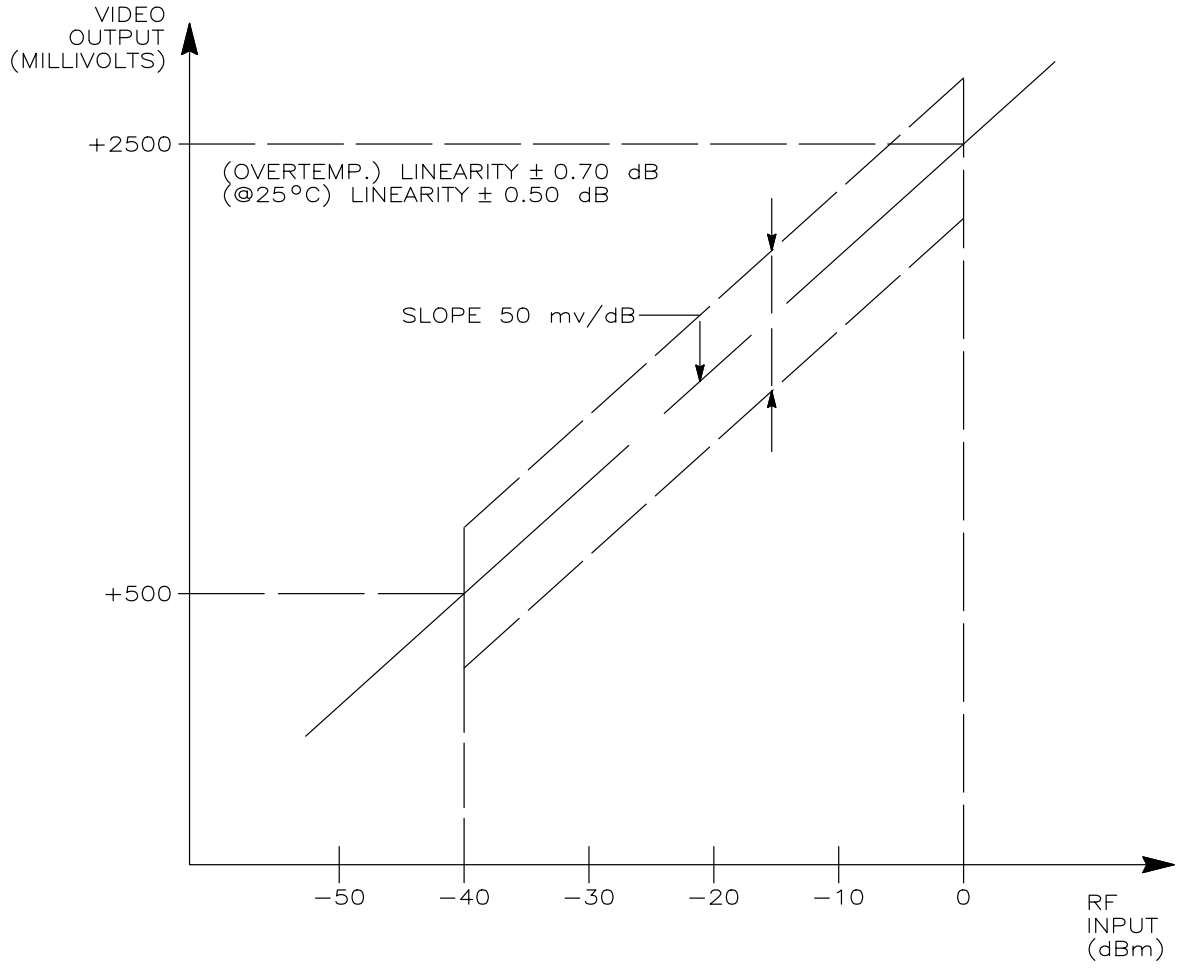


NX2100

Figure 6-8. Video Output Versus RF Input

6-4.4.5 R5. This fault group consists of Receiver Interface UD4A32 and 4-Position Diode Switch UD4A22.

**NOTE**

This procedure assumes that the RDASOT is loaded and RECVDIAG Test Control Menu is displayed at the RDA System Console. Refer to EHB 6-510-2, RDASOT User's Guide, for an explanation of the RDA subtest.

1. At the RDA System Console, enter:

| | | |
|---|---|---|
| a. | **Ø<Return>** | To return to Diagnostic Menu. |
| b. | **Ø<Return>** | To return to Main Menu. |
| c. | **4<Return>** | To select Manual Control and Display Menu. |
| d. | **2<Return>** | To select Control RCVR/Signal Proc. |

2. On Receiver Interface UD4A32, remove cable 4W401 from UD4A32J8 and install the 9-pin breakout cable between cable 4W401 and UD4A32J8.

3. At the RDA System Console, enter:

| | | |
|---|---|---|
| a. | **4<Return>** | To select Klystron Output Source. |
| b. | **1<Return>** | To inject signal. |

4. Connect the logic probe lead with the red dot to UD4TB3 D-3 (+5 Vdc). Connect the other lead to UD4TB3 D-G (Ground). Probe the nine pins on the breakout cable and compare logic states to the chart below.

| Pin | Klystron Output Source | Klystron Drive Source | CW Source | RF Noise Source |
|---|---|---|---|---|
| 1 | 0 | 0 | 1 | 0 |
| 2 | 1 | 0 | 1 | 1 |
| 3 | 0 | 1 | 0 | 0 |
| 4 | 0 | 1 | 1 | 1 |
| 5 | 1 | 0 | 0 | 0 |
| 6 | 1 | 1 | 0 | 1 |
| 7 | 1 | 1 | 1 | 0 |
| 8 | 0 | 0 | 0 | 1 |
| 9 | X | X | X | X |

5. If the probe's values agree with the chart, continue with next step; otherwise, Receiver Interface UD4A32 is faulty and must be replaced.

6. At the RDA System Console, enter:

| | | |
|---|---|---|
| a. | **<Return>** | To continue. |
| b. | **Ø<Return>** | To return to Testsig Source Selection Menu. |
| c. | **3<Return>** | To select Klystron Drive Source. |
| d. | **1<Return>** | To input signal. |

7. Repeat steps 4 and 5.
8. At the RDA System Console, enter:

| | | |
|---|---|---|
| a. | **<Return>** | To continue. |
| b. | **Ø<Return>** | To return to Testsig Source Selection Menu. |
| c. | **5<Return>** | To select CW Source. |
| d. | **1<Return>** | To inject signal. |

9. Repeat steps 4 and 5.
10. At the RDA System Console, enter:

| | | |
|---|---|---|
| a. | **<Return>** | To continue. |
| b. | **Ø<Return>** | To return to Testsig Source Selection Menu. |
| c. | **6<Return>** | To select RF Noise Source. |
| d. | **1<Return>** | To inject signal. |

11. Repeat steps 4 and 5.
12. If all of the values agree with the chart in step 4, replace 4-Position Diode Switch UD4A22.

6-4.4.6 R6. This fault group consists of Receiver Interface UD4A32 and RF Test Attenuator UD4A23.

**NOTE**

This procedure assumes that RDASOT is loaded and RECVDIAG Test Control Menu is displayed at the RDA System Console. Refer to EHB 6-510-2, RDASOT User's Guide for an explanation of the RDASOT subtest.

1. At the RDA System Console, enter:

| | | |
|---|---|---|
| a. | **Ø<Return>** | To return to Diagnostic Menu. |
| b. | **Ø<Return>** | To return to Main Menu. |

c. **4<Return>** For Manual Control and Display Menu.

d. **2<Return>** To select Control RCVR/Signal Proc.

e. **5<Return>** To select CW Source.

f. **2<Return>** To toggle RCVR Injection Point to Front End.

g. **4<Return>** For Test Attenuation.

h. **Ø<Return>** For Ø dB of Attenuation.

2. At UD4A32J5, remove cable 4W400 and insert 15-pin breakout cable between P2 of 4W400 and UD4A32J5.

3. At the RDA System Console, enter **1<Return>** to inject signal.

4. Using a logic probe, probe the 15 pins of the breakout cable and compare the logic states to the Ø dB values of the chart below.

| | Logic States | |
|---|---|---|
| Pin | 0 dB | 103 dB |
| 1 | 1 | 0 |
| 2 | 0 | 1 |
| 3 | 1 | 0 |
| 4 | 0 | 1 |
| 5 | 1 | 0 |
| 6 | 0 | 1 |
| 7 | 1 | 0 |
| 8 | 0 | 1 |
| 9 | X | X |
| 10 | 1 | 0 |
| 11 | 0 | 1 |
| 12 | 1 | 0 |
| 13 | 0 | 1 |
| 14 | 1 | 0 |
| 15 | 0 | 1 |

5. If the logic states do not match the chart, replace Receiver Interface UD4A32.

6. At the RDA System Console, enter:

| | | |
|---|---|---|
| a. | **<Return>** | To continue. |
| b. | **4<Return>** | For Test Attenuation. |
| c. | **1Ø3<Return>** | For 103 dB of Attenuation. |
| d. | **1<Return>** | To inject signal. |

7. Using a logic probe, probe the 15 pins of the breakout cable and compare the logic states to the 103 dB values of the chart in step 4.

8. If the logic states match the values in the chart, replace RF Test Attenuator UD4A23; otherwise, replace Receiver Interface UD4A32.

6-4.4.7 R7. This fault group consists of Receiver Interface UD4A32 and 2-Position RF Diode Switch UD4A24.

**NOTE**

This procedure assumes that RDASOT is loaded and RECVDIAG Test Control Menu is displayed at the RDA System Console. Refer to EHB 6-510-2, RDASOT User's Guide for an explanation of the RDASOT subtest.

1. At the RDA System Console, enter:

| | | |
|---|---|---|
| a. | **Ø<Return>** | To return to Diagnostic Menu. |
| b. | **Ø<Return>** | To return to Main Menu. |
| c. | **4<Return>** | For Manual Control and Display Menu. |
| d. | **2<Return>** | To select Control RCVR/Signal Proc. |
| e. | **5<Return>** | To select CW Source. |

2. On Receiver Interface UD4A32, remove cable 4W402 from UD4A32J10 and insert a 9-pin breakout cable between 4W402P1 and UD4A32J10.

3. At the RDA System Console, CW Source Control Menu, ensure that RCVR Injection Point is Cabinet. If not, enter **2<Return>** to toggle to Cabinet. Then enter **1<Return>** to inject signal.

4. Using logic probe, probe pins 4 and 5 of breakout cable.

5. If pin 4 is a logic low and pin 5 is a logic high, proceed to step 6; otherwise replace Receiver Interface UD4A32.

6. At the RDA System Console, enter:

| | | |
|---|---|---|
| a. | **<Return>** | To continue. |
| b. | **2<Return>** | To toggle RCVR Injection Point to Front End. |
| c. | **1<Return>** | To inject signal. |

7. Using logic probe, probe pins 4 and 5 of breakout cable.

8. If pin 4 is a logic high and pin 5 is a logic low, replace RF Diode Switch UD4A24; otherwise, replace Receiver Interface UD4A32.

6-4.4.8 R8. This fault group consists of the + Log Amplifier Detector UD4A17 and the + Guard Band Filter UD4A15.

**NOTE**

This procedure assumes that RDASOT is loaded and RECVDIAG Test Control Menu is displayed at the RDA System Console.

1. At the RDA System Console, enter:

| | | |
|---|---|---|
| a. | **Ø<Return>** | To return to Diagnostic Menu. |
| b. | **Ø<Return>** | To return to Main Menu. |
| c. | **4<Return>** | For Manual Control and Display Menu. |
| d. | **2<Return>** | To select Control RCVR/Signal Proc. |
| e. | **6<Return>** | To select RF Noise Source. |

2. Ensure that RCVR Injection Point on line 2 is Front End; if it is not, enter **2<Return>** to toggle to Front End.

3. At the RDA System Console, enter:

| | | |
|---|---|---|
| a. | **4<Return>** | To select Test Attenuation. |
| b. | **Ø<Return>** | For Ø dB of Attenuation. |

4. Ensure that RCVR Protect on line 6 is Normal; if it is not, enter **6<Return>** to toggle to Normal.

5. Ensure that Interference Suppression on line 7 is Disabled; if it is not, enter **7<Return>** to toggle to Disabled.

6. Ensure that the Test A/D Bandwidth is Wide; if it is not, enter:

| | |
|---|---|
| a. **8<Return>** | To select Test A/D Bandwidth |
| b. **1<Return>** | To select Wide Band. |

7. At the RDA System Console, enter:

| | |
|---|---|
| a. **3<Return>** | To select RCVR Interface Output Select (RIOS). |
| b. **8<Return>** | To select RF/IF Test Monitor Output. |
| c. **2<Return>** | To select Detected IF. |
| d. **1<Return>** | To select Page 2 of IF Selection Menu. |
| e. **9<Return>** | To select Guardband (+) Log Det Input Test Jack. |
| f. **1<Return>** | To inject signal. |

8. Note the value of the signal level in dBm from the chart on the screen.
9. At the RDA System Console, enter:

| | |
|---|---|
| a. **<Return>** | To continue. |
| b. **4<Return>** | To select Test Attenuation. |
| c. **1Ø3<Return>** | For 103 dB of Attenuation. |
| d. **1<Return>** | To inject signal. |

10. Note the value of the signal level in dBm from the chart on the screen.
11. If the value from step 10 is at least 3 dB less than the value in step 8, the (+) Log Detector UD4A17 is faulty; otherwise, the (+) Guard Band Filter UD4A15 is faulty.

6-4.4.9 R9. This fault group consists of the (-) Log Amplifier Detector UD4A18 and (-) Guard Band Filter UD4A16.

**NOTE**

This procedure assumes that RDASOT is loaded and RECVDIAG Test Control Menu is displayed at RDA System Console.

1. At the RDA System Console, enter:

| | |
|---|---|
| a. **Ø<Return>** | To return to Diagnostic Menu. |
| b. **Ø<Return>** | To return to Main Menu. |

c. **4<Return>** For Manual Control and Display Menu.

d. **2<Return>** To select Control RCVR/Signal Proc.

e. **6<Return>** To select RF Noise Source.

2. Ensure that RCVR Injection Point on line 2 is Front End; if it is not, enter **2<Return>** to toggle to Front End.

3. At the RDA System Console, enter:

a. **4<Return>** To select Test Attenuation.

b. **Ø<Return>** For Ø dB of Attenuation.

4. Ensure that RCVR Protect on line 6 is Normal; if it is not, enter **6<Return>** to toggle to Normal.

5. Ensure that Interference Suppression on line 7 is Disabled; if it is not, enter **7<Return>** to toggle to Disabled.

6. Ensure that Test A/D Bandwidth is Wide; if it is not, enter:

a. **8<Return>** To select Test A/D Bandwidth

b. **1<Return>** To select Wide Band.

7. At the RDA System Console, enter:

a. **3<Return>** To select RCVR Interface Output Select (RIOS).

b. **8<Return>** To select RF/IF Test Monitor Output.

c. **2<Return>** To select Detected IF.

d. **1<Return>** To select Page 2 of IF Selection Menu.

e. **1Ø<Return>** To select Guardband (-) Log Det Input.

f. **1<Return>** To inject signal.

8. Note the value of the signal level in dBm from the chart on the screen.

9. At the RDA System Console, enter:

a. **<Return>** To continue.

b. **4<Return>** To select Test Attenuation.

c. **1Ø3<Return>** For 103 dB of Attenuation.

d. **1<Return>** To inject signal.

10. Note the value of the signal level in dBm from the chart on the screen.

11. If the value from step 10 is at least 3 dB less than the value in step 8, the - Log Detector UD4A18 is faulty; otherwise, the - Guard Band Filter UD4A16 is faulty.

6-4.4.10 R10. This fault group consists of the RCVR Protector, UD2A3 and the Low Noise Amplifier UD2A4.

**NOTE**

This procedure assumes that RDASOT is loaded and RECVDIAG Test Control Menu is displayed at the RDA System Console. Refer to EHB 6-510-2, RDASOT User's Guide for an explanation of the RDASOT subtest.

1. At the RDA System Console, enter:

a. **Ø<Return>** To return to Diagnostic Menu.

b. **Ø<Return>** To return to Main Menu.

c. **4<Return>** For Manual Control and Display Menu.

d. **2<Return>** To select Control RCVR/Signal Proc.

e. **5<Return>** To select CW source.

f. **2<Return>** To toggle RCVR Injection Point to Front End.

g. **4<Return>** For Test Attenuation.

h. **3Ø<Return>** For 30 dB of Attenuation.

i. **1<Return>** To inject signal.

2. Proceed to the antenna. Ensure that you have an adjustable wrench, a Phillips screwdriver, a power meter, and power heads (-70 to -20 dBm and -30 to +20 dBm).

3. Calibrate the power meter per paragraph 6-6.22 .

4. In the pedestal base:

a. Locate the Bandpass Filter 2A1A3FL1/2. To make this measurement it will be necessary to remove the Low Noise Amplifier UD2A4 by removing the four screws securing it to the support bracket, then removing the connector at

2A1A3FL1/2 Out. Measure the power at point 2A1A3FL1/2 Out: it should be ≥ -45 dBm. If the measurement does not match this value, proceed to step b, (the Receiver Protector UD2A3, Passive Limiter, or Bandpass Filter 2A1A3FL1/2 is faulty), otherwise, continue with step 5.

b. Disconnect heliax cable 2W900 from Bandpass Filter 2A1A3FL1/2 In. Measure the power output of cable 2W900. If the value is ≥ -45 dBm, replace Bandpass Filter 2A1A3FL1/2. Otherwise, proceed to step c.

c. Reconnect 2W900 to 2A1A3FL1/2 In. Disconnect 2W900 from the passive diode limiter at the receiver protector. Attach an N-type barrel connector to the passive diode limiter and measure the power output of the barrel connector. If the measurement is at ≥ -45 dBm, replace cable 2W900. Otherwise, proceed to step d.

d. Remove barrel connector from diode limiter and remove diode limiter from receiver protector. Measure the output of the receiver protector. If there is much more than 1 dB difference from the previous measurement, the passive diode limiter is faulty. Otherwise, the receiver protector is faulty.

5. Disconnect the power meter and reconnect the receiver protector and the low noise amp. At the output of the Low Noise Amplifier UD2A4, disconnect 2W2 and hook up the power meter using the -30 to +20 dBm power head.

6. If the value is not (step 4 value +27 dB) ± 2 dB, replace the Low Noise Amplifier UD2A4.

6-4.4.1 1 R11. This fault group consists of the Receiver Log Amplifier Detector UD4A12.

**NOTE**

This procedure assumes that the RF/IF Test Monitor UD4A31 is aligned properly and that subtest 19 has failed. This test is performed by removing IF input and output video signals only.

1. Calibrate a signal generator to supply a 0 dB output at a frequency of 57.55 MHz.

2. Calibrate a power meter using the procedure described in paragraph 6-6.22 and verify 0 dB out at the end of the signal generator cable.

3. Disconnect cable 4W203 from UD4A12J1 and connect the output of the signal generator to UD4A12J1. (Type N-to-SMA connectors will be necessary.)

4. Connect a DVM to UD4A12J2 through a 100 ohm terminator. (Use coax to banana plug adapter at multimeter.)

5. The meter reading should be 2.65v ± .025 Vdc.

**NOTE**

The video output voltage will be positive over the entire 0 to -80 dB range of operation. There will be a linear 25 mV voltage change at the meter for every dB of change at the signal generator.

6. Decrease the signal generator signal level to -80 dB.

7. The meter reading should be .65v ± .025 Vdc.

8. Repeat this procedure for output jacks J3, J4, and J5. Readings should be identical to specifications in steps 5 and 7 above.

9. If UD4A12 meets these conditions, disconnect test equipment and reconnect system cables. If it does not meet performance criteria, replace the module.

6-4.4.12 R12. This receiver noise troubleshooting fault group consists of the Receiver Front End UD2A3A1 and UD2A4 and Receiver IF section, UD4A5 through UD4A9.

1. Perform the AGC Clock alignment procedure per paragraph 6-6.24.7 . If this does not clear the problem, proceed to step 1A.

1A. Measure the gain of the IF Amplifier/Limiter UD4A9 module before proceeding. At the RDA System Console, enter:

**NOTE**

This procedure is for high receiver channel noise levels.

| | |
|---|---|
| a. **RDASOT <Return>** | Brings up RDASOT. Displays Main Menu. |
| b. **4<Return>** | To select Manual Control and Display Menu. |
| c. **2<Return>** | To select Control RCVR/Signal Proc. |
| d. **5<Return>** | To select CW Source. |

2. Ensure the RCVR Injection Point is set for Cabinet injection; if not, enter **2<Return>** to toggle to Cabinet.

3. At the RDA System Console, enter:

| | |
|---|---|
| a. **4<Return>** | To select Test Attenuation. |
| b. **25<Return>** | For 25 dB of Attenuation. |

4. Hook up the AGC Test Fixture (reference paragraph 6-6.24 ) and clock in 0 dB of IF attenuation.

5. At the RDA System Console, enter:

| | |
|---|---|
| a. **1<Return>** | To inject signal. |

6. Re-clock the AGC Test Fixture.

7. Measure the power at the input to UD4A9J1 (end of cable W206) using an 8481A power sensor. The reading should be around –25 dBm. If desired, an 8484A or 8481D power sensor could be used for better accuracy of measurements below –20 dBm.

   Power Meter Reading: _____ dBm

8. Reconnect cable W206 to UD4A9J1. Measure power at UD4A9J2 using the 8481A power sensor. DO NOT USE 8484A OR 8481D SENSOR. The reading should be approximately 40 dB higher than the step 7 reading.

   Power Meter Reading: _____ dBm

9. Subtract value in step 7 from value in step 8 to determine 4A9 gain:

   4A9 gain = _____ – (–_____)

   = _____ + _____

   = _____ dB

10. DELETED

11. Add 40 dB to the step 7 reading and adjust the UD4A9 gain such that the power meter indicates this value. This establishes the gain of 4A9 at exactly 40 dB.

**NOTE**

Ensure ALL SOURCES OFF is selected before connecting power sensor.

12. At the RDA System Console, enter:

| | | |
|---|---|---|
| a. | **Ø<Return>** | To return to TESTSIG Source Selection Menu. |
| b. | **1<Return>** | To select All Sources Off. |

13. With ALL SOURCES OFF selected, connect 8484A or 8481D power sensor to UD4A9J2. Re–clock the AGC Test Fixture (0 dB). Record the power meter reading.

    UD4A9J2 Power Meter Reading: _____ dBm

    If this value is high (e.g., –45 dBm), a noise problem exists at or before the 4A9 module. Continue with step 14.

    If this value is normal (–50 dBm ± 3 dBm), a noise problem exists after the 4A9 module. Proceed to step 23.

**NOTE**

Steps 14 through 22 are for a high noise level at UD4A9J2.

14. At the RDA System Console, enter:

| | | |
|---|---|---|
| a. | **Ø<Return>** | To return to TESTSIG Source Selection Menu. |
| b. | **3<Return>** | To select Klystron Drive Source. |

15. Ensure the RCVR Injection Point is set for Front End injection; if not, enter **2<Return>** to toggle to Front End.

16. Ensure the RCVR Protect On is at Normal; if not, enter **6<Return>** to toggle to Normal.

17. At the RDA System Console, enter:

| | | |
|---|---|---|
| a. | **4<Return>** | To select Test Attenuation. |
| b. | **1Ø3<Return>** | For 103 dB of Attenuation. |
| c. | **1<Return>** | To inject signal. |

18. Record power reading:

    Power Meter Reading: _____ dBm

19. At the RDA System Console, enter:

| | | |
|---|---|---|
| a. | **6<Return>** | To toggle RCVR Protect On to Forced On. |
| b. | **1<Return>** | To inject signal. |

20. Record power meter reading:

    Power Meter Reading: _____ dBm

21. With the receiver protector forced on (step 19), the “noise” level normally goes positive by about 1.5 dBm over the step 18 reading. This is caused by the termination affect into the LNA with the receiver protector on. If the step 20 value is actually more negative than the step 18 value, then the receiver protector itself may be bad. The receiver protector can contribute noise to the circuit.

22. In RDASOT, select ALL SOURCES OF by performing step 12. Repeat the step 13 measurement, and record power meter readings in the following table while moving a 50 ohm terminator through the receiver channel (terminating inputs to a specific module). Leave power sensor connected to 4A9J2.

**NOTE**

At this point, it is assumed that the Example reading will be high.
The “moving terminator” readings should reveal the problem

component. In theory, when the terminator is after the module's output, a noisy module would cause the noise level to be low (more negative), but would jump up when terminated at the input of that module. Note that with the LNA input terminated, an increase of about 5 dB in the noise level is normally seen. So, a larger increase than that would be seen if the LNA is noisy. Also, a noisy ±18 Vdc power supply may contribute noise into the LNA.

| | | | EXPECTED | EXAMPLE |
|---|---|---|---|---|
| Normal (ALL SOURCES OFF): | | _____ | -50.0 ± 3 dBm | (-50.51) |
| Terminate: | 4A9J1 | _____ | -58.0 ± 3 dBm | (-58.01) |
| | 4A8J1 | _____ | -55.0 ± 3 dBm | (-54.93) |
| | 4A7J1 | _____ | -55.0 ± 3 dBm | (-54.98) |
| | 4A6J1 | _____ | -55.0 ± 3 dBm | (-55.00) |
| | 4A5J1 | _____ | -54.5 ± 3 dBm | (-54.40) |
| | 4A5J1 | _____ | -54.5 ± 3 dBm | (-54.40) |
| | W100 (IN) | _____ | -54.5 ± 3 dBm | (-54.35) |
| | 2A4J1 | _____ | -49.5 ± 3 dBm | (-49.45) |
| | PASS LIM | _____ | -49.5 ± 3 dBm | (-49.42) |

**NOTE**

The Example values shown on the far right side were collected on an OSF system operating normally. The tolerances given are fairly broad to take into account system variances but the numbers on the far right side help illustrate module-to-module changes when each are terminated in order. Once again, the Example reading would be high at this point; however, subsequent readings may be close to the example values. When the reading goes high again compared to the examples, the faulty component has been found.

**NOTE**

Steps 23 through 25 are for a "normal" noise level at 4A9J2 with the gain of 4A9 adjusted to near 40 dB.

23. Continue the IQ Phase Detector adjustments and AGC threshold adjustments in accordance with paragraphs 6-6.24.2 through 6-6.24.5. Bring the system up to evaluate the Short Pulse Lin Chan Noise in accordance with paragraph 6-6.24.6; however, **DO NOT ADJUST THE 4A9 GAIN YET!** Note the value of Short Pulse Lin Chan Noise:

    Noise: _____

24. If the noise level is greater than .30E-05 (for example, .36E-05), the A/D Converter (4A11) may be faulty; assuming that the requirement of steps 1A through 11 were

met, the value in step 13 is “normal”, and the I/Q Phase Detector alignments (step 23) were completed successfully. However, a defective 4A8 IF Attenuator can also cause these symptoms even though it appears normal during paragraph 6-6.24 alignment and noise level evaluation at 4A9J2 (step 13 above). This noise may be caused by the clocking action of the attenuator. The clocking noise would not show up any time the AGC test fixture is hooked up to 4A8. To isolate this possibility, bring the RDA up with the AGC test fixture connected and clock in 0 dB. Evaluate the Short Pulse Lin Chan Noise. If the noise level is in tolerance, the IF Attenuator is suspect.

25. If the noise level of step 23 is high but less than .30E-05 (for example, .28E-05), the A/D converter may be non-linear and still require replacement. Proceed as follows:

    a. Compute the excess noise level as follows:

       Excess Noise = 10 log(current reading/.20E-05)

       For example, if the present reading is .28E-05, then:

       Excess Noise = 10 log(.28E-05/.20E-05)

       = 10 log(1.4)

       = 10 (.146)

       = 1.46 dB

       This means the gain of 4A9 should be adjusted down approximately 1.5 dB to get the correct Short Pulse Lin Chan Noise. Excess Noise = 10 log(current reading/.20E-05).

    b. In accordance with paragraph 6-6.24.6 , adjust the gain of 4A9 to obtain the correct noise level (.20E-05).

    c. Recheck the gain in accordance with step 1A through 11 procedures. The gain should have decreased by the approximate amount noted in step 25.a. This needs to be compared to 40 dB if the gain was adjusted in accordance with step 11. Or, compare it to the step 21 value if the gain was not previously adjusted.

    d. If the gain actually decreased significantly, more than the step 25.a value, the A/D converter is acting non-linear (i.e., needs large change in analog input to change digital output a little). Replace A/D converter.

## 6-4.5 HARDWIRED SIGNAL PROCESSOR FUNCTIONAL GROUP.

The RDA primary fault isolation flowchart (Figure 6-2) references eight secondary fault isolation procedures for the ambiguous fault groups in the hardwired signal processor (HSP) functional group. These procedures are designated HSP1 through HSP8 (enclosed in rectangles) and are contained in

Figure 6-9. Figure 6-9 identifies the signals to be tested, provides pass/fail criteria for these signals, and provide block diagrams for the subtests as an aid in understanding the information presented. Figure 6-9, sheet 21 also supplies a map of the HSP backplane to aid the technician in locating circuit points to be probed. For the HSP8 procedure, see Figure 6-14 for an example of how test points are numbered on the front of the cards. Perform the procedure in paragraph 6-4.5.1 before proceeding to Figure 6-9. A digital multimeter (Fluke Model 8060A or equivalent) and a logic probe (HP545A or equivalent) are required to perform these procedures.

6-4.5.1 HSP1 through HSP3 and HSP5 through HSP8 General Procedure.

**NOTE**

Skip step 1 when performing HSP7.

1. Perform the procedure in paragraph 6-4.5.3 to continuously run the applicable HSP subtest that failed during primary fault isolation.
2. Perform the procedure in paragraph 6-4.5.4 to set up logic probe.
3. Perform the procedure in paragraph 6-4.5.5 to perform continuity checks whenever the HSP or PSP backplane is indicated as a possible fault in Figure 6-9. Refer to Chapter 7 for wiring diagrams.
4. Use the logic probe to probe signals referenced in Figure 6-9.

6-4.5.2 HSP4 Procedure.

1. If test point 3 (TP3) does not pass, then check pin A074. If A074 is OK on UD5A10A7, perform the same check on UD5A10A8. If the input to A8 is OK, then UD5A10A8 is faulty; otherwise UD5A10A7 is faulty.
2. If a failure is noted on TP55, then perform the following:
   a. Check TPs 29, 30, 31, and 32. If these fail, perform step c. If these points are OK, continue with step b.
   b. Check pins A91, A93, A95, and A97. If OK, replace UD5A10A7. If they fail, trace to source.
   c. Replace UD5A10A7.

6-4.5.3 HSP Subtest Setup.

| | | |
|---|---|---|
| 1. | At the RDA System Console, enter: | |
| | a. **RDASOT<Return>** | Brings up RDASOT. Displays Main Menu. |
| | b. **2<Return>** | To select Diagnostic Menu. |
| | c. **5<Return>** | To select HWSP Diagnostics. |
| 2. | **2<Return>** | Selects Options Display/Modify Options. Main Option Menu is displayed. |
| 3. | **1<Return>** | Selects Error Control Options. Error Control Option Menu is displayed. |
| 4. | **2<Return>** | To select Continue On Error. The Main Option Menu is displayed. |
| 5. | **2<Return>** | To select Error Display Options. The Error Message Option Menu is displayed. |
| 6. | **2<Return>** | To select No Error Message Display. The Main Option Menu is displayed. |
| 7. | **3<Return>** | To select the Loop Control Selection. `Enter Loop Count (9999=INFINITE)` is displayed. |
| 8. | **9999<Return>** | This selects 9999 as the amount of times the test will run. This will run much longer than the time one will require to perform the tests in this procedure. The Main Option Menu is displayed. The following options should be displayed:<br>Error Control Option is (CONT)<br>Error Display Options is (OFF)<br>Loop Control Selection is (9999). |
| 9. | **Ø<Return>** | Exits to the HWSPDIAG Test Control Menu. |
| 10. | **4<Return>** | Deselects All Subtests. |
| 11. | **5<Return>** | Selects Individual Subtests. |
| 12. | Select failed subtest group by entering: | |
| | a. **1<Return>** or | For Subtests 1 thru 10. |
| | b. **2<Return>** | For Subtest 11. |
| 13. | ***x*<Return>**<br>*x* = failed subtest | Selects failed subtest. |

14. **Ø<Return>** — To select Return to Subtest Menu.
15. **Ø<Return>** — To select Subtest Selection Complete.
16. **1<Return>** — This selects Begin Subtest Execution.

    The HWSP subtest should run continuously. Indication that the test is running scrolls onto the screen. It is imperative to wait for the execution of one complete subtest before making a judgment whether any particular circuit point is normal or abnormal. The display screen informs the operator of the beginning and end of each subtest execution. As a general rule, the signals listed shall change state during the performance of the subtest, except as listed in notes for the particular subtest.

6-4.5.4 Logic Probe Setup.

1. Open the rear left cabinet door to RDADP and locate the HSP and PSP backplane. If there is not enough light to see the backplanes clearly, hang a drop light in a convenient spot.
2. The Hewlett Packard 545A Logic Probe has two leads with a female pin at the end of each one. Push the lead labeled with a red dot over any pin 1 (+5 Vdc) on the PSP backplane. Push the unlabeled pin over pin 9 (fifth pin down) in the same column as the other lead. See Figure 6-9, sheet 21 (HSP) or Figure 6-10, sheet 9 (PSP).

   The red LED near the tip of the probe should be dimly lit.

   If checking test points on the front of the HSP cards, it will be easier to connect logic probe power on the front side of the GND and +5 Vdc bus bars presently shown on the left side of Figure 6-9, sheet 21. Looking at the front of the HSP chassis, the two bus bars will be toward the right hand side with the GND bus bar being the closest to the cabinet wall.
3. Ensure that the TTL/CMOS switch is in the TTL position.

| | |
|---|---|
| 4. Touch the metal tip of the probe to any other pin 1 on the PSP backplane. | The red LED near the tip of the probe should be lit brightly, indicating a high logic state (1). One should be able to easily distinguish the difference between the dimly lit state (which indicates a high impedance or open circuit state) and a brightly lit state. |
| 5. Touch the metal tip of the probe to any other pin 5 on the PSP backplane. | The red LED should return to the dimly lit state upon removing the tip from pin 1. Upon touching the tip to pin 5, the red LED near the tip should extinguish and stay so until the tip is removed from pin 5 (this is a low logic state). |

6-4.5.5 Wiring and Backplane Continuity Check. The following steps will check the wiring connections between boards on the HSP and PSP.

| | |
|---|---|
| 1. Stop the RDASOT from running by pressing the **<Break>** key.<br><br>At the system prompt "*", enter **KILLSOT<Return>**. | Many things will be displayed on the screen. Wait until the screen stops scrolling. |
| 2. Enter **D TA<Return>**. | The only task identifier displayed under the TASK-ID column should be TIME, or NO TASKS FOUND should be displayed. |
| 3. At the Secondary PDP UD7A3, set Signal Processor circuit breakers CB16 and 18 to **OFF**.<br><br>(**Redundant sites**, use Secondary PDP #1 UD7A3 for Channel 1 or Secondary PDP #2 UD7A29 for Channel 2). | |
| 4. Perform continuity checks with the multimeter to find the fault on the backplane or cabling. | |

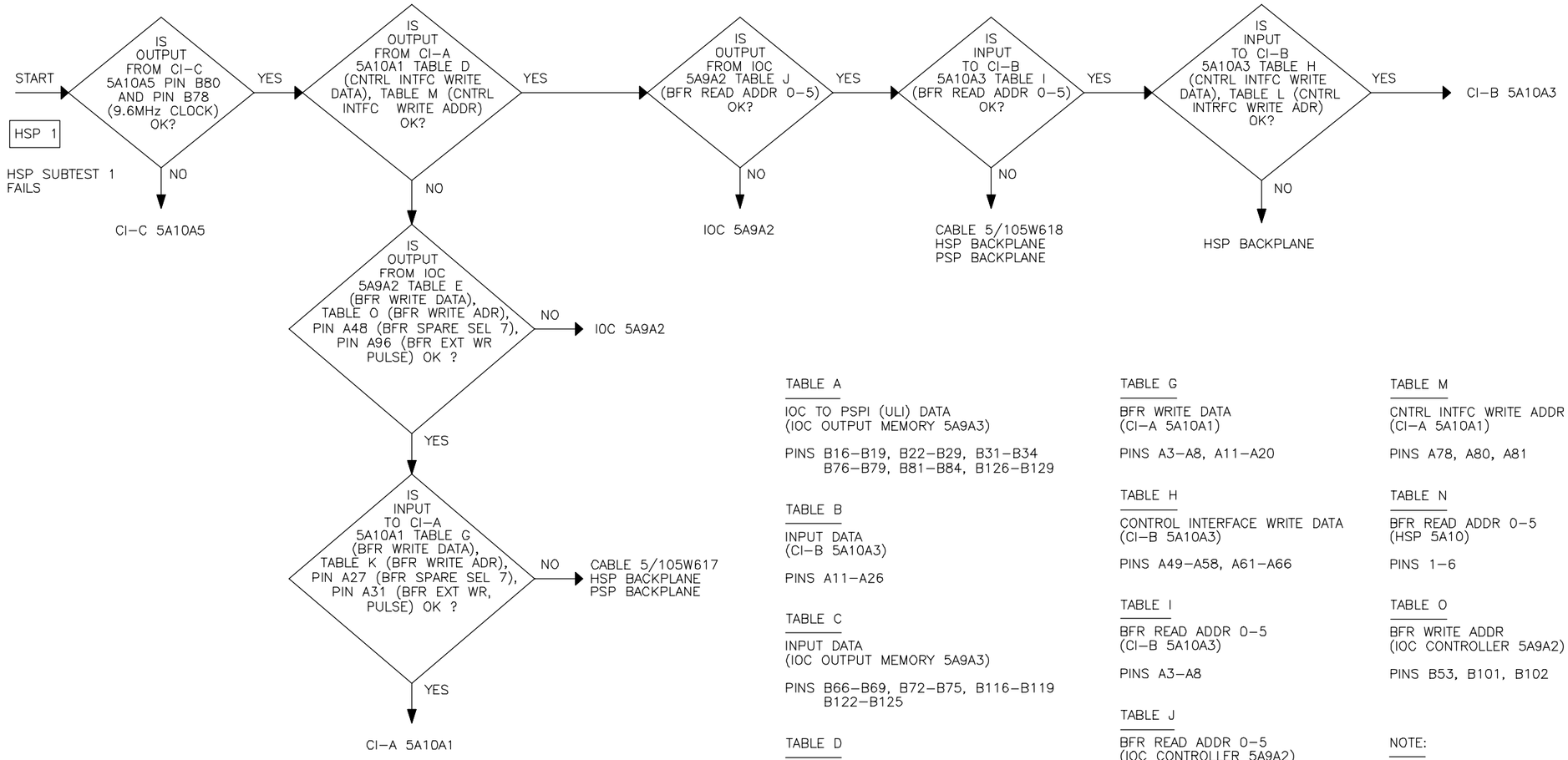


TABLE A

IOC TO PSPI (ULI) DATA
(IOC OUTPUT MEMORY 5A9A3)

PINS B16–B19, B22–B29, B31–B34
B76–B79, B81–B84, B126–B129

TABLE B

INPUT DATA
(CI–B 5A10A3)

PINS A11–A26

TABLE C

INPUT DATA
(IOC OUTPUT MEMORY 5A9A3)

PINS B66–B69, B72–B75, B116–B119
B122–B125

TABLE D

CONTROL INTERFACE WRITE DATA
(CI–A 5A10A1)

PINS A49–A58, A61–A66

TABLE E

BFR WRITE DATA
(IOC CONTROLLER 5A9A2)

PINS A87–A94, A137–A144

TABLE F

PSPI (ULI) TO IOC OUTPUT DATA
(IOC CONTROLLER 5A9A2)

PINS A52–A54, A56–A64, A66–A69
A102–A104, A106–A114, A116–A119

TABLE G

BFR WRITE DATA
(CI–A 5A10A1)

PINS A3–A8, A11–A20

TABLE H

CONTROL INTERFACE WRITE DATA
(CI–B 5A10A3)

PINS A49–A58, A61–A66

TABLE I

BFR READ ADDR 0–5
(CI–B 5A10A3)

PINS A3–A8

TABLE J

BFR READ ADDR 0–5
(IOC CONTROLLER 5A9A2)

PINS B58–B60, B108–B110

TABLE K

BFR WRITE ADDR
(CI–A 5A10A1)

PINS A34, A36, A37

TABLE L

CONTROL INTERFACE WRITE ADDRESS
(CI–B 5A10A3)

PINS A78, A80, A81

TABLE M

CNTRL INTFC WRITE ADDR 0–5
(CI–A 5A10A1)

PINS A78, A80, A81

TABLE N

BFR READ ADDR 0–5
(HSP 5A10)

PINS 1–6

TABLE O

BFR WRITE ADDR
(IOC CONTROLLER 5A9A2)

PINS B53, B101, B102

NOTE:

BFR SPARE SEL 7
IS LOGIC HIGH
ON PIN A48 OF 5A9A2
AND PIN A27 OF 5A10A1

THE TABLES ARE THE PIN LOCATIONS OF DATA BUSES. THE LOGIC STATE ON ANY PIN OF A DATA BUS THAT IS PASSING DATA SHOULD CHANGE MANY TIMES DURING ONE EXECUTION OF SUBTEST 3 (UNLESS OTHERWISE SPECIFIED). AN ENABLE SIGNAL, HOWEVER, MAY ONLY BLINK ONCE DURING ONE EXECUTION OF THE SUBTEST.
A NORMAL INDICATION IS AT LEAST ONE STROBE (LOGIC PROBE LED BLINKS) DURING SUBTEST EXECUTION

NX2101

Figure 6-9. HSP Secondary Fault Isolation Flowchart (Sheet 1 of 21)

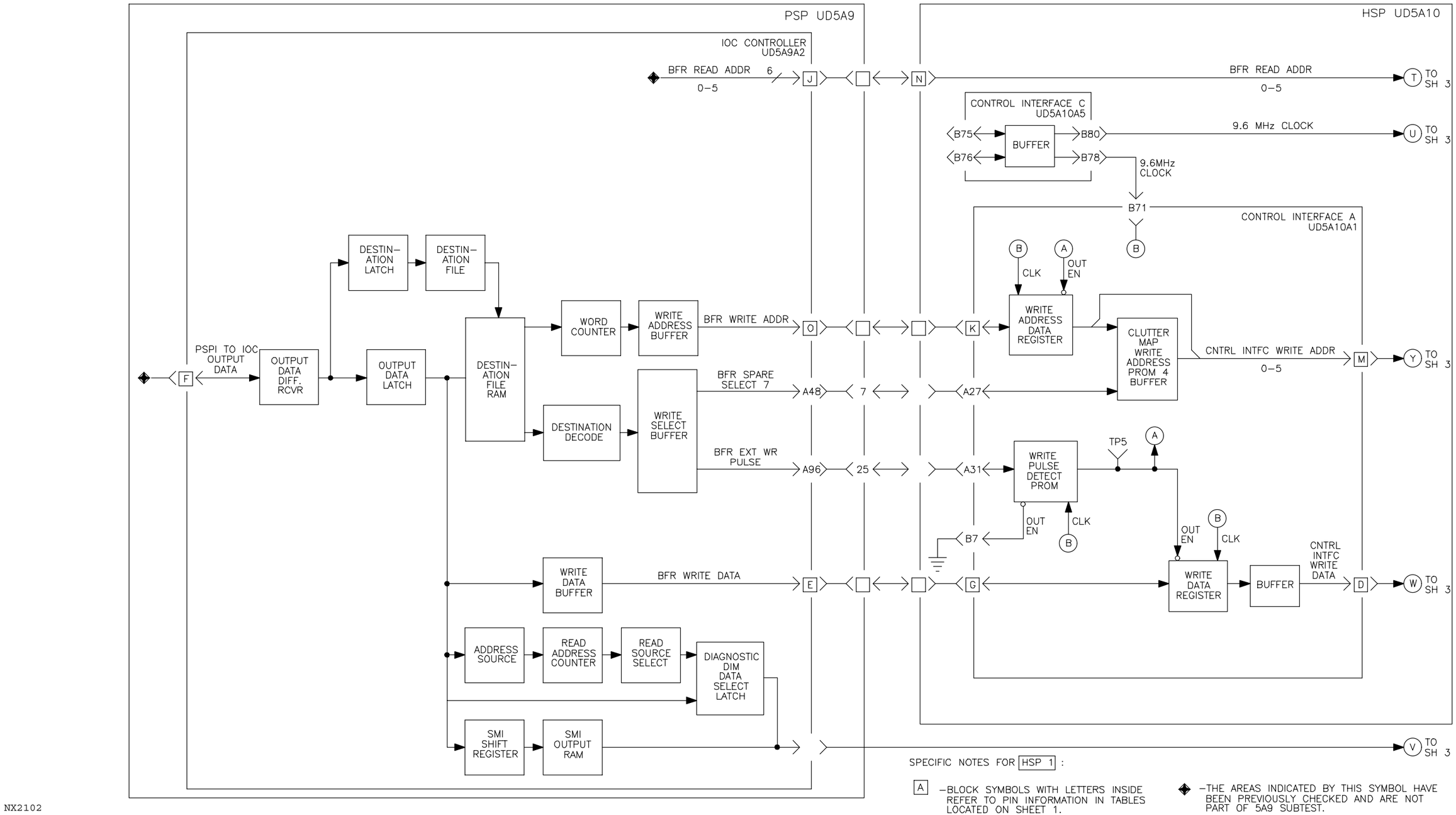


Figure 6-9. HSP Secondary Fault Isolation Flowchart (Sheet 2 of 21)

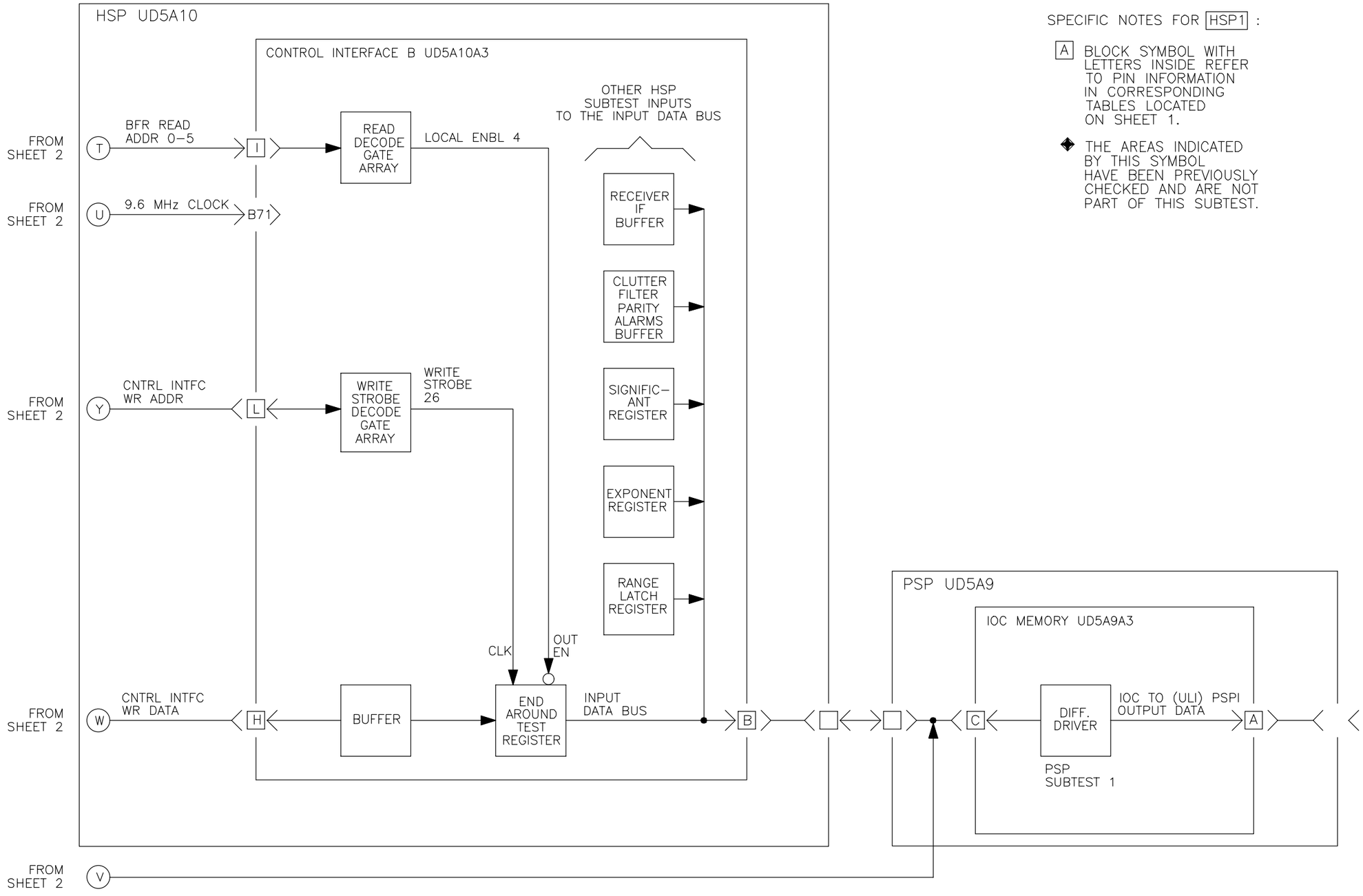


SPECIFIC NOTES FOR HSP1 :

A BLOCK SYMBOL WITH LETTERS INSIDE REFER TO PIN INFORMATION IN CORRESPONDING TABLES LOCATED ON SHEET 1.

◆ THE AREAS INDICATED BY THIS SYMBOL HAVE BEEN PREVIOUSLY CHECKED AND ARE NOT PART OF THIS SUBTEST.

NX2103

Figure 6-9. HSP Secondary Fault Isolation Flowchart (Sheet 3 of 21)

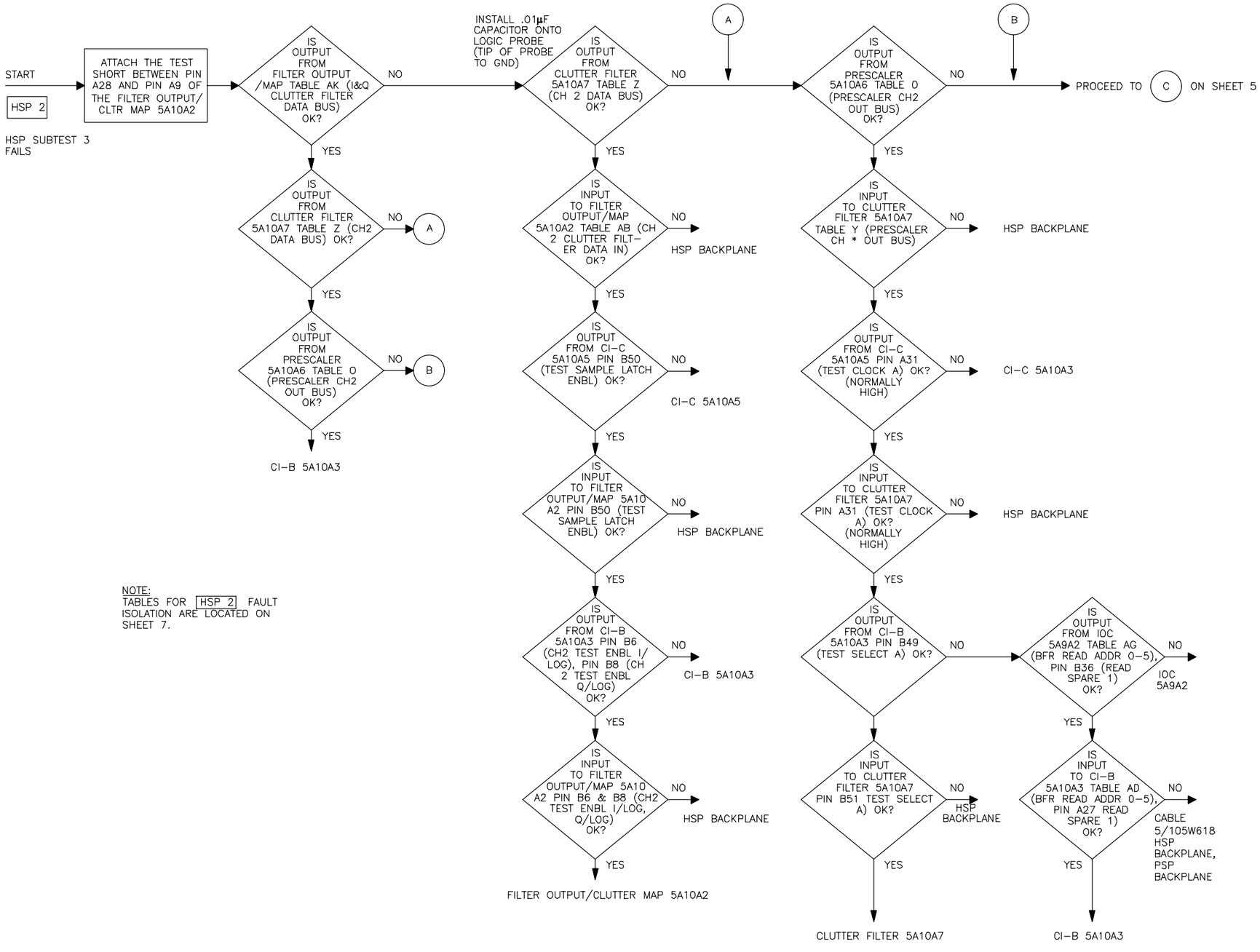


NOTE:
TABLES FOR HSP 2 FAULT ISOLATION ARE LOCATED ON SHEET 7.

NX2104

Figure 6-9. HSP Secondary Fault Isolation Flowchart (Sheet 4 of 21)

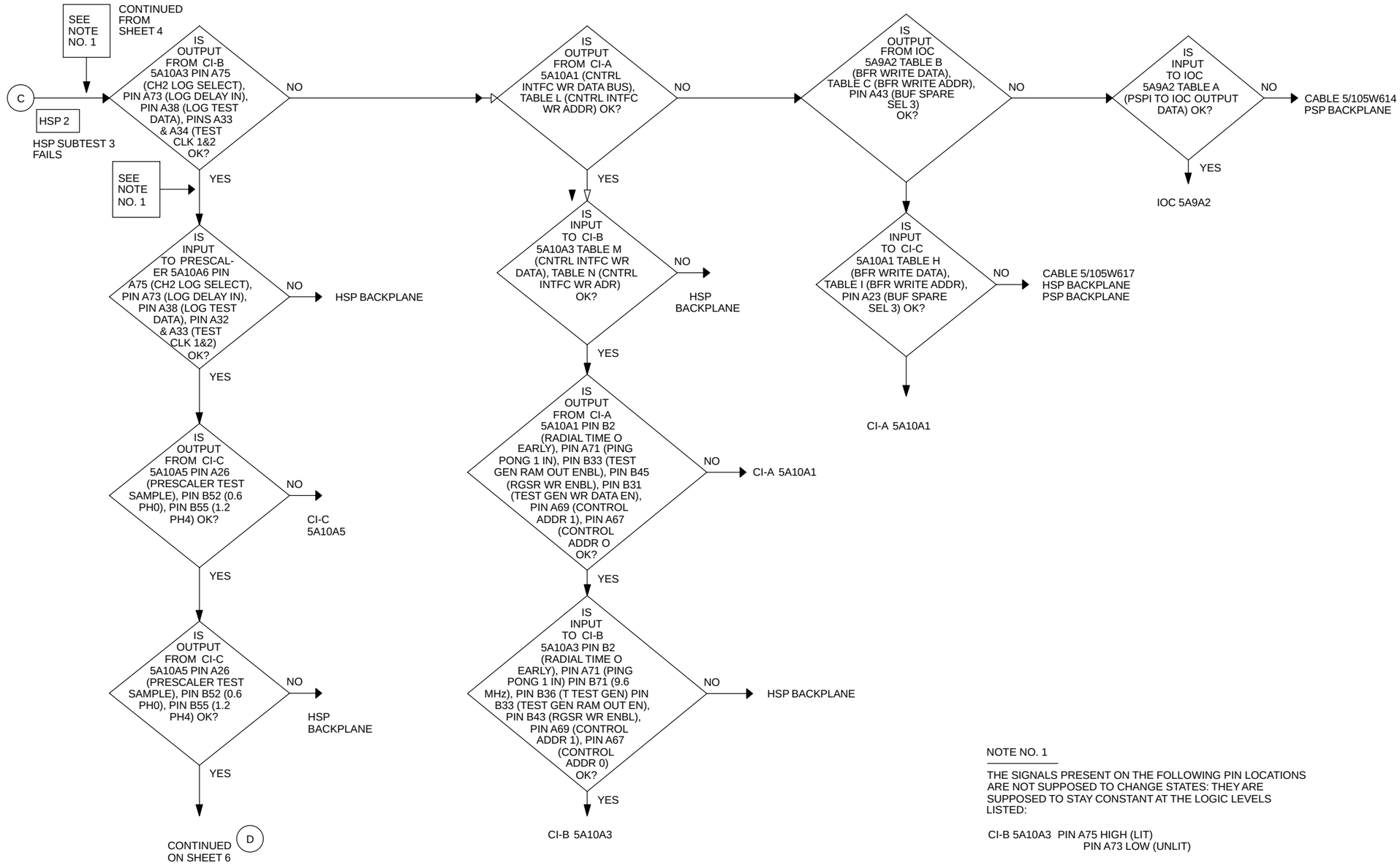


NOTE NO. 1

THE SIGNALS PRESENT ON THE FOLLOWING PIN LOCATIONS ARE NOT SUPPOSED TO CHANGE STATES: THEY ARE SUPPOSED TO STAY CONSTANT AT THE LOGIC LEVELS LISTED:

CI-B 5A10A3 PIN A75 HIGH (LIT)
PIN A73 LOW (UNLIT)

PRESCALER 5A10A6 PIN A75 HIGH (LIT)
PIN A73 LOW (UNLIT)
PIN A25 LOW (UNLIT)

NX2105

Figure 6-9. HSP Secondary Fault Isolation Flowchart (Sheet 5 of 21)

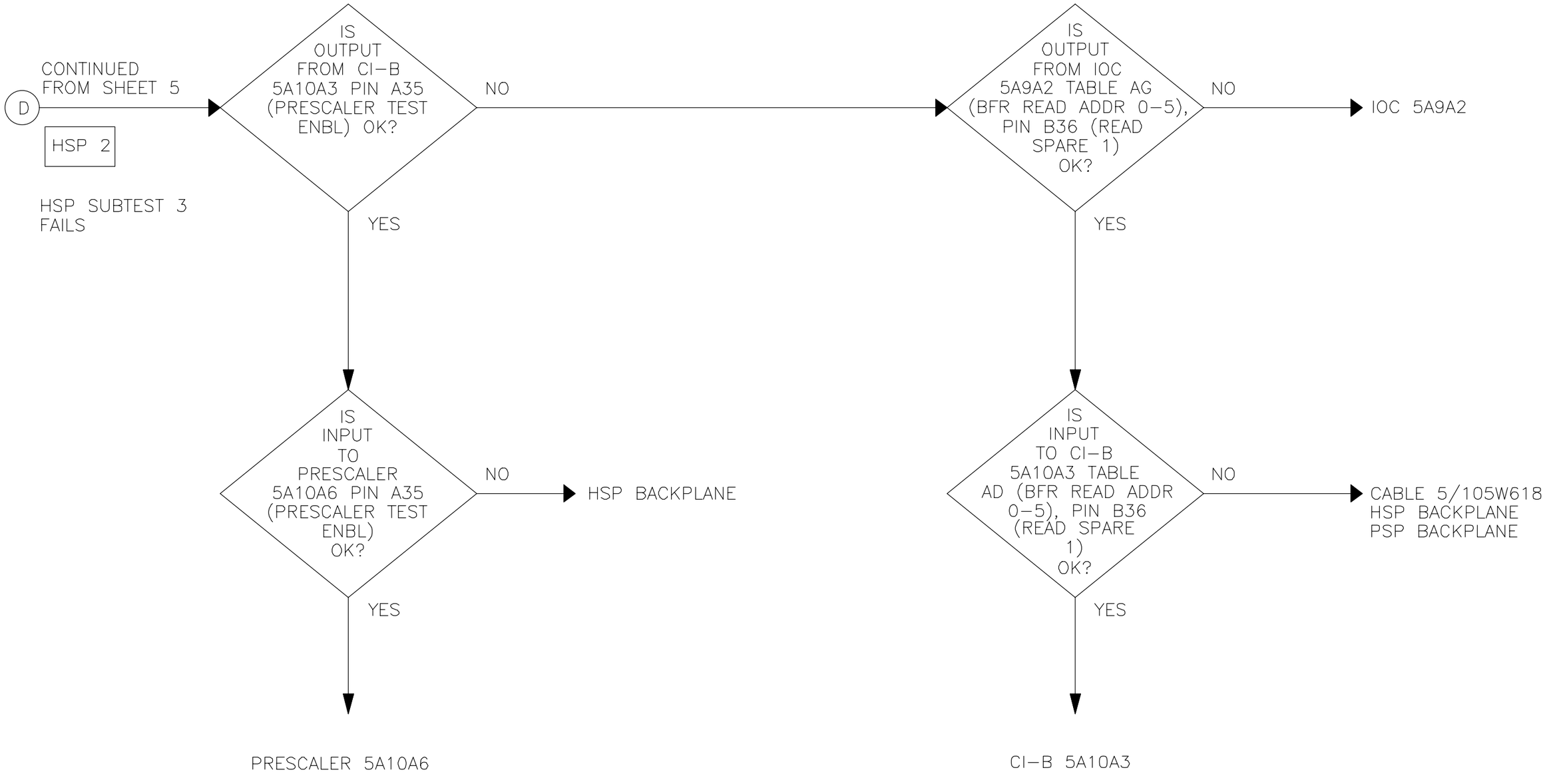


NX2106

Figure 6-9. HSP Secondary Fault Isolation Flowchart (Sheet 6 of 21)

THE TABLES ARE THE PIN LOCATIONS OF DATA BUSES. THE LOGIC STATE ON ANY PIN OF A DATA BUS THAT IS PASSING DATA SHOULD CHANGE MANY TIMES DURING ONE EXECUTION OF SUBTEST 3 (UNLESS OTHERWISE SPECIFIED), AN ENABLE SIGNAL, HOWEVER, MAY ONLY BLINK ONCE DURING ONE EXECUTION OF THE SUBTEST.

HSP 2

TABLE A

PSPI TO IOC OUTPUT DATA
(IOC CONTROLLER 5A9A2)

PINS A52–A54, A56–A64, A66–A69
A102–A104, A106–A114, A116–A119

TABLE B

BFR WRITE DATA
(IOC CONTROLLER 5A9A2)

PINS A87–A94, A137–A144

TABLE C

BFR WRITE ADDR
(IOC CONTROLLER 5A9A2)

PINS B51–B54, B56–B57, B101–B104
B106–B107

TABLE D

BFR WRITE DATA
(5A9)

PINS 1–16

TABLE E

BFR WRITE ADDR
(5A9)

PINS 27–38

TABLE F

BFR WRITE DATA
(5A10)

PINS 1–16

TABLE G

BFR WRITE ADDR
(5A10)

PINS 27–38

TABLE H

BFR WRITE DATA
(CI–A 5A10A1)

PINS A3–A8, A11–A20

TABLE I

BFR WRITE ADDR
(CI–A 5A10A1)

PINS A33–A44

TABLE J

PSPI TO IOC OUTPUT DATA
(5A9)

PINS 1–32

TABLE K

CNTRL INTFC WR DATA
(CI–A 5A10A1)

PINS A49–A58, A61–A66

TABLE L

CNTRL INTFC WR ADR
(CI–A 5A10A1)

PINS A77–A88

TABLE M

CNTRL INTFC WR DATA
(CI–B 5A10A3)

PINS A49–A58, A61–A68
A68 IS A LOGIC LOW

TABLE N

CNTRL INTFC WR ADR
(CI–B 5A10A3)

PINS A77–A88

TABLE O

PRESCALER CH2 OUT
(PRESCALER 5A10A6)

PINS B2, B4, B6, B8, B12, B14, B16
B18, B20, B22, B24, B26, B28
B30, B32, B34, B36, B38, B42
B44, B46, B48

(IT IS A NORMAL CONDITION FOR PIN B32 TO HAVE AN UNCHANGING HIGH LOGIC STATE AND FOR PIN B34 TO HAVE AN UNCHANGING LOW LOGIC STATE)

(ALL OTHER PINS IN TABLE O CHANGE STATES AT A 10 Hz RATE: IF THE LOGIC PROBE INDICATES THAT A SIGNAL STROBES ONLY ONCE PER TEST IT IS AN INDICATION OF A FAILURE)

TABLE P

TEST BUS
(PRESCALER 5A10A6)

PINS B75–B88, B91–B98

TABLE Q

TEST BUS
(CI–B 5A10A3)

PINS B75–B88, B91–B98

TABLE R

INPUT DATA
(CI–B 5A10A3)

PINS A11–A26

TABLE S

INPUT DATA
(5A10)

PINS 17–32

TABLE T

INPUT DATA
(5A9)

PINS 17–32

TABLE U

INPUT DATA
(5A9A3)

PINS B66–B69, B72–B75,
B116–B119, B122–B125

TABLE V

IOC TO PSPI DATA
(IOC 5A9A3)

PINS B16–B19, B22–B29, B31–B34
B76–B79, B81–B84, B126–B129
B131–B134

TABLE W

IOC TO PSPI DATA
(5A9)

PINS 1–32

TABLE X

IOC TO PSPI DATA
(5A12A14)

PINS 1–32

TABLE Y

PRESCALER CH* OUT
(CLUTTER FILTER 5A10A7)

PINS B1, B3, B5, B7, B11, B13
B15, B17, B19, B21, B23
B25, B27, B29, B31, B33
B35, B37, B41, B43, B45
B47

(IT IS A NORMAL CONDITION FOR PIN B31 TO HAVE AN UNCHANGING HIGH LOGIC STATE AND FOR PIN B33 TO HAVE AN UNCHANGING LOW LOGIC STATE)

TABLE Z (PLACE CAPACITOR ON LOGIC PROBE)

CH2 DATA BUS
(CLUTTER FILTER 510A7)

PINS B2, B4, B6, B8, B12, B14, B16,
B18, B20, B22, B24, B26, B28,
B30, B32, B34, B36, B38,
B42, B46, B48 (B34 IS A LOGIC LOW)

TABLE AA

TEST BUS
(CLUTTER FILTER 5A10A7)

PINS B75–B88, B91–B98

TABLE AB

CH2 CLUTTER FILTER DATA IN
(FILTER OUTPUT/CLUTTER MAP 5A10A2)

PINS B12, B14, B16, B18, B20, B22,
B24, B26, B28, B30, B32, B34,
B36, B38, B42, B44, ,B46, B48

TABLE AC

I & Q DATA TEST BUS
(FILTER OUTPUT/CLUTTER MAP 5A10A2)

PINS B79–B88, B91–B98

TABLE AD

BFR READ ADDR
(CI–B 5A10A3)

PINS A3–A8

TABLE AE

BFR READ ADDR
(5A10)

PINS 1–6

TABLE AF

BFR READ ADDR
(5A9)

PINS 1–6

TABLE AG

BFR READ ADDR
(IOC CONTROLLER 5A9A2)

PINS B58–B60, B108–B110

TABLE AK

I & Q CLUTTER FILTER DATA BUS
(FILTER OUTPUT/CLUTTER MAP 5A10A2)

PINS A3–A8, A11–A22, A31–A34
A83–A88, A91–A98

(IT IS A NORMAL CONDITION FOR PIN A97 TO HAVE AN UNCHANGING HIGH LOGIC STATE AND FOR PIN A98 TO HAVE AN UNCHANGING LOW LOGIC STATE)

THE SIGNALS PRESENT ON THE FOLLOWING PIN LOCATIONS ARE NOT SUPPOSED TO CHANGE STATES. THEY ARE SUPPOSED TO STAY CONSTANT AT THE LOGIC LEVELS LISTED:

CI–B 5A10A3 PIN A75 HIGH (LIT)
PIN A73 LOW (UNLIT)
PIN A25 LOW (UNLIT)

PRESCALER 5A10A6 PIN A75 HIGH (LIT)
PIN A73 LOW (UNLIT)
PIN A25 LOW (UNLIT)

NX2107

Figure 6-9. HSP Secondary Fault Isolation Flowchart (Sheet 7 of 21)

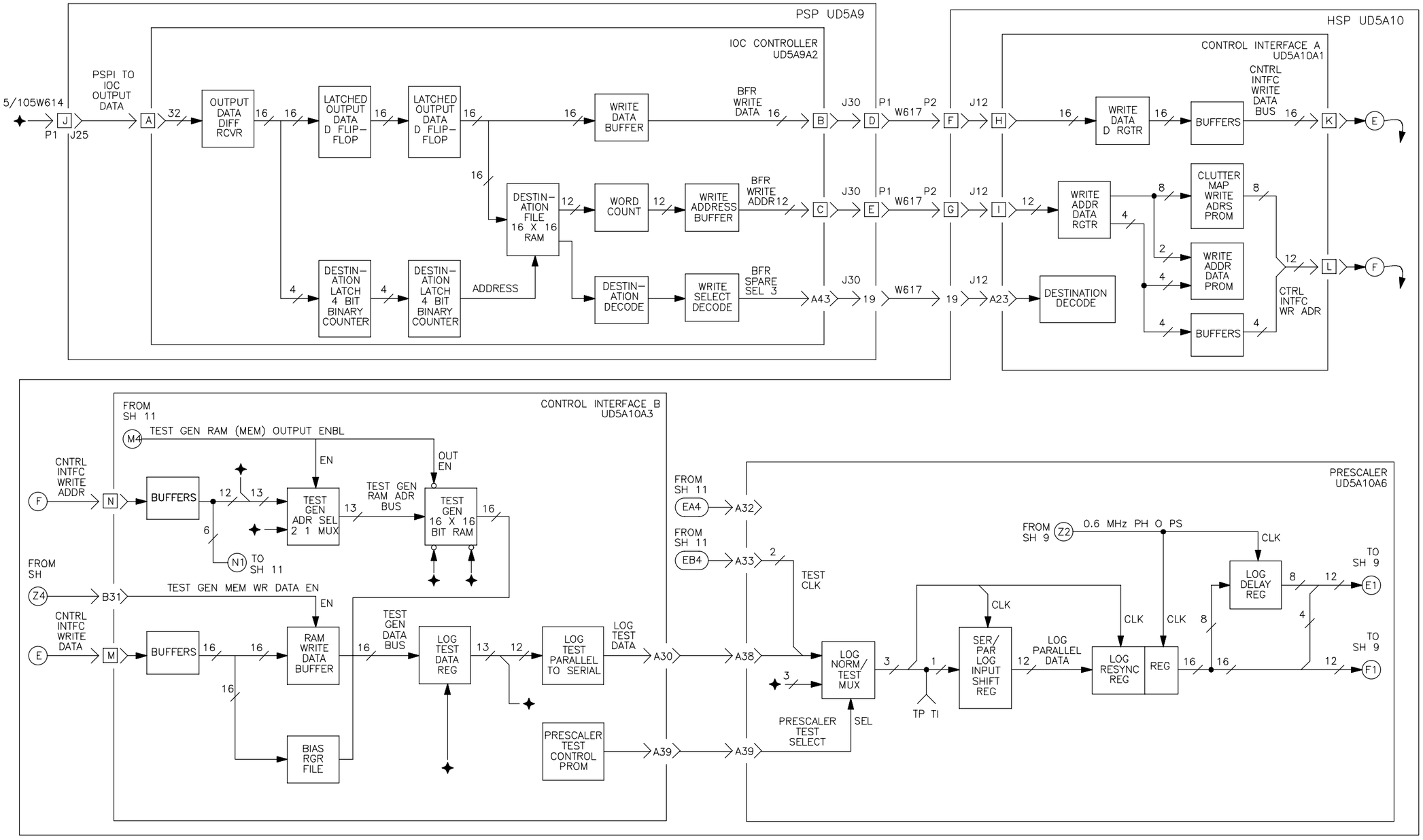


Figure 6-9. HSP Secondary Fault Isolation Flowchart (Sheet 8 of 21)

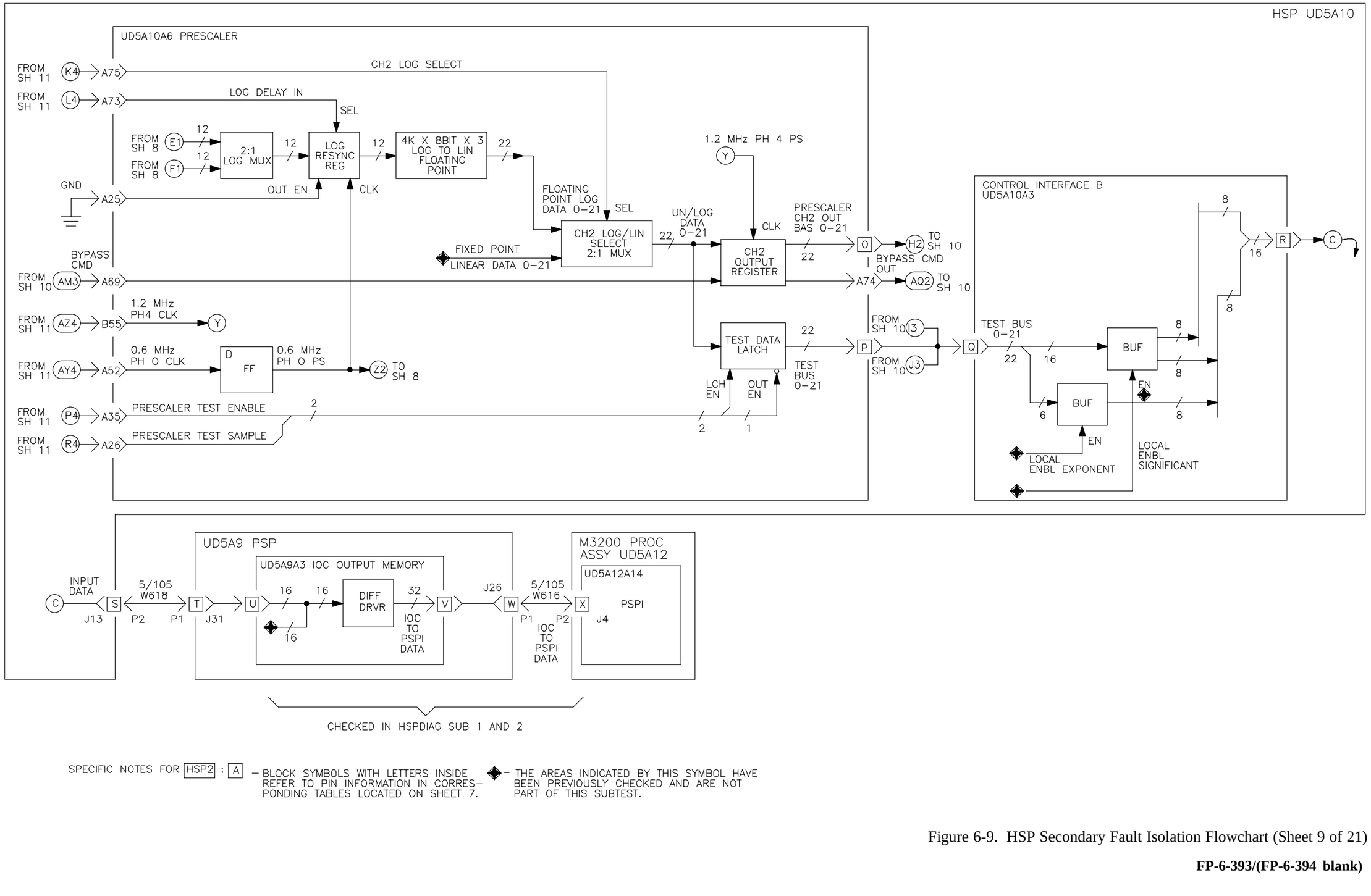


Figure 6-9. HSP Secondary Fault Isolation Flowchart (Sheet 9 of 21)

SPECIFIC NOTES FOR HSP2 : A – BLOCK SYMBOLS WITH LETTERS INSIDE REFER TO PIN INFORMATION IN CORRESPONDING TABLES LOCATED ON SHEET 7.

✦ – THE AREAS INDICATED BY THIS SYMBOL HAVE BEEN PREVIOUSLY CHECKED AND ARE NOT PART OF THIS SUBTEST.

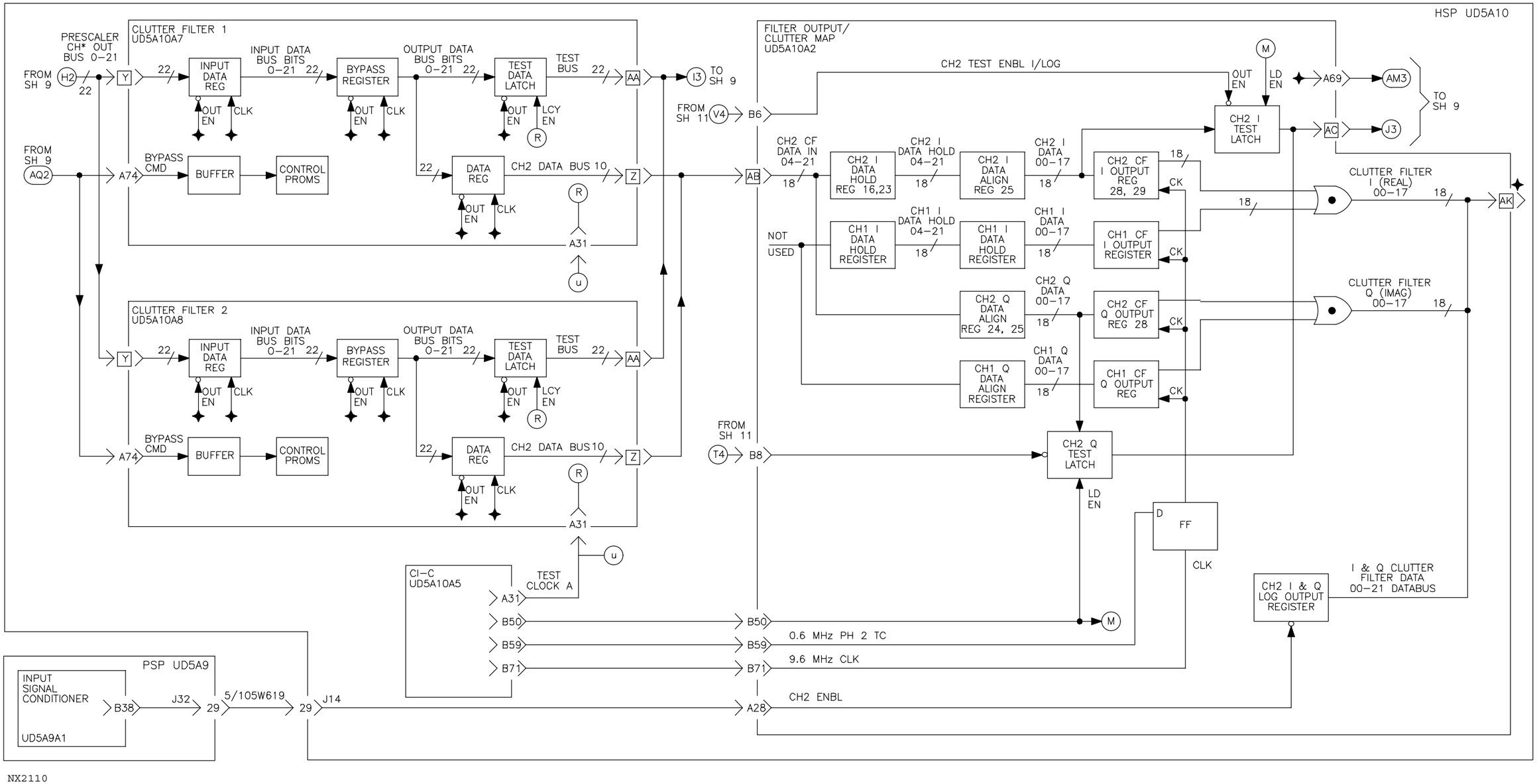


Figure 6-9. HSP Secondary Fault Isolation Flowchart (Sheet 10 of 21)

SPECIFIC NOTES FOR HSP2 : A – BLOCK SYMBOLS WITH LETTERS INSIDE REFER TO PIN INFORMATION IN CORRESPONDING TABLES LOCATED ON SHEET 7. ✦ – THE AREAS INDICATED BY THIS SYMBOL HAVE BEEN PREVIOUSLY CHECKED AND ARE NOT PART OF THIS SUBTEST.

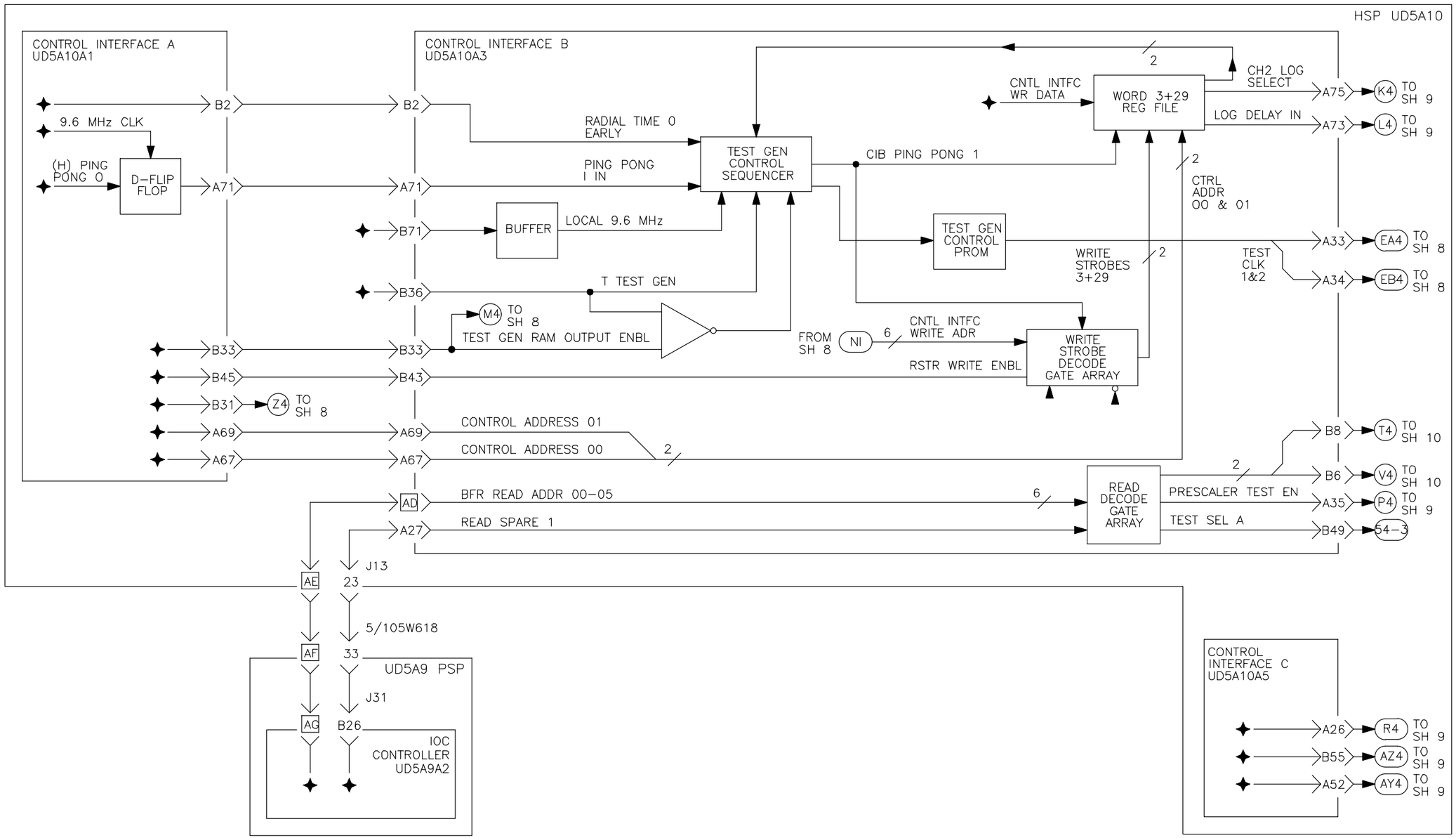


Figure 6-9. HSP Secondary Fault Isolation Flowchart (Sheet 11 of 21)

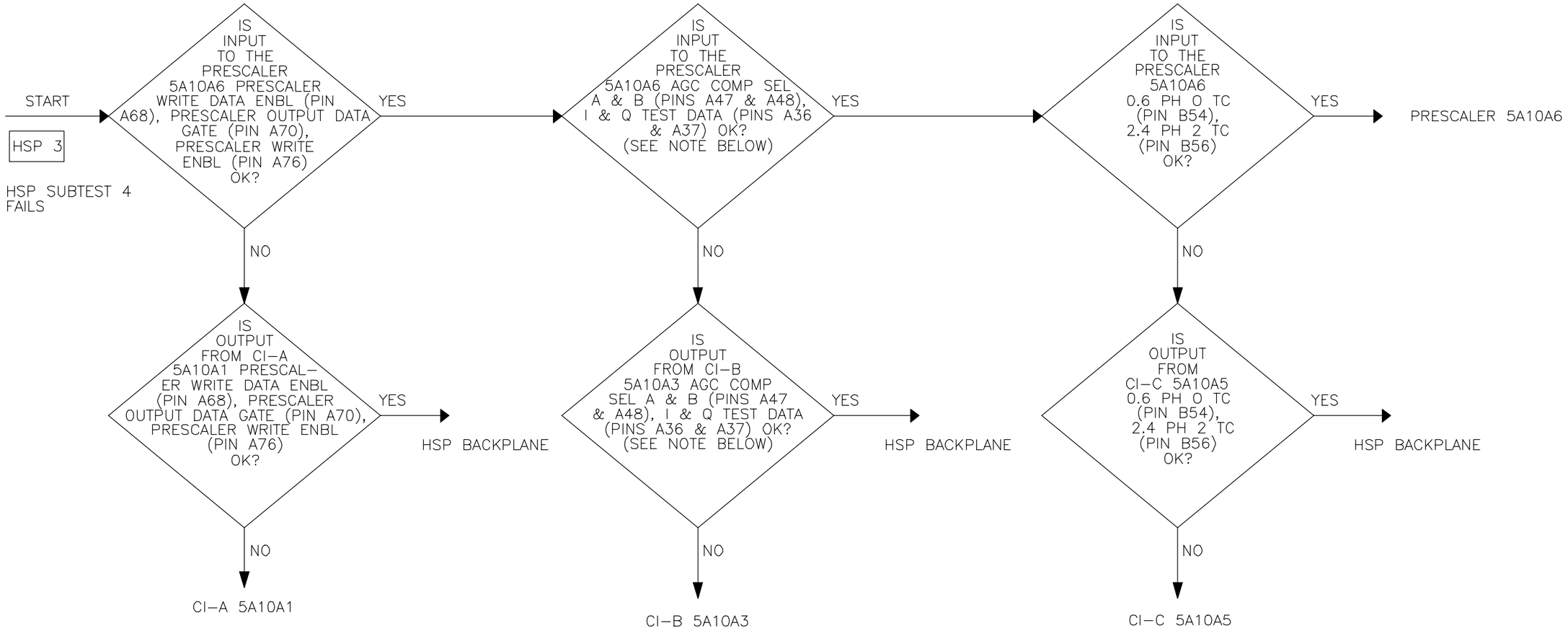


NOTE: THE CIRCUIT POINTS INDICATED ABOVE SHOULD TOGGLE BETWEEN A HIGH AND LOW STATE DURING THE PERFORMANCE OF SUBTEST 4 EXCEPT AS NOTED BELOW:

5A10A6–A48 STAYS A LOGIC HIGH
5A10A3–A48 STAYS A LOGIC HIGH

NX2112

Figure 6-9. HSP Secondary Fault Isolation Flowchart (Sheet 12 of 21)

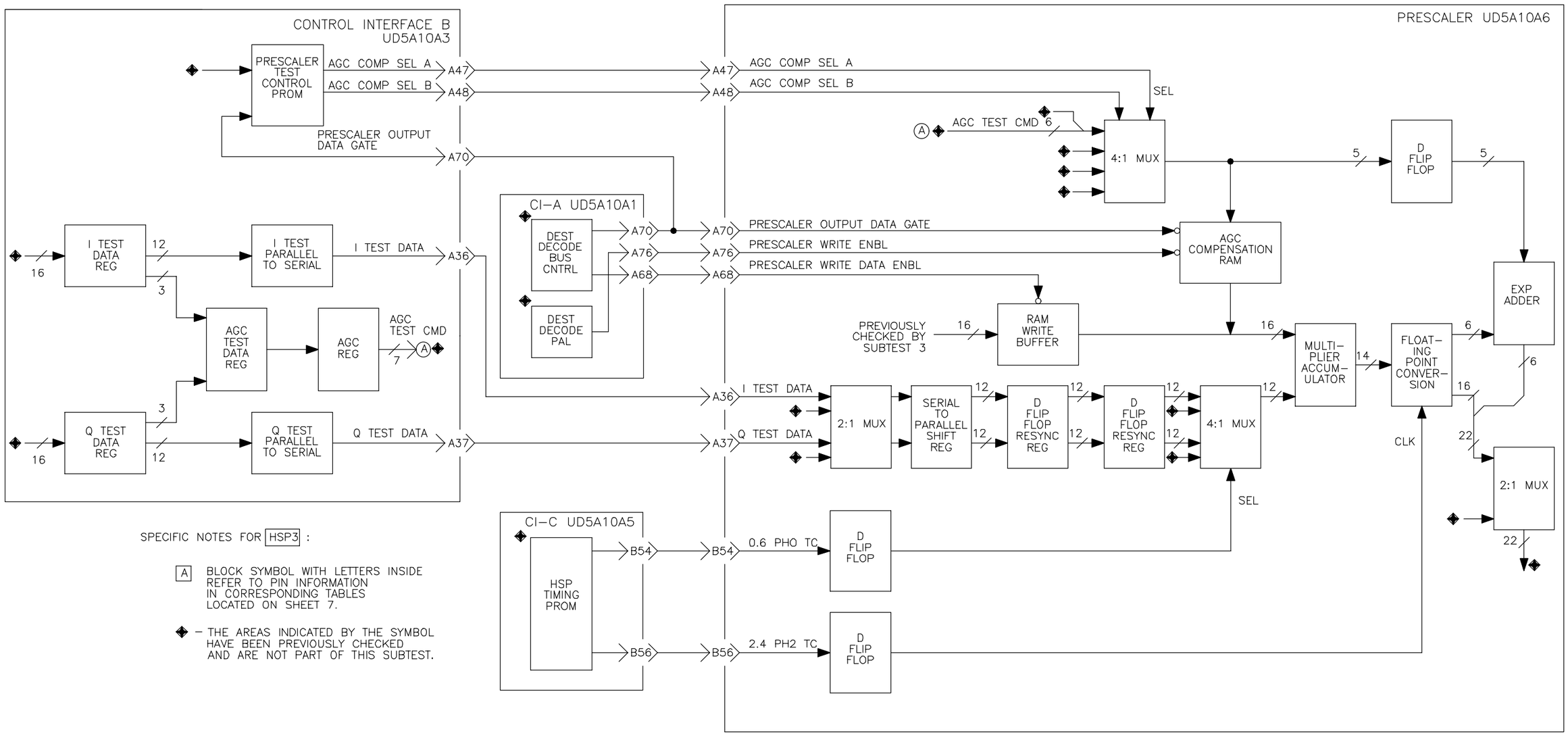


Figure 6-9. HSP Secondary Fault Isolation Flowchart (Sheet 13 of 21)

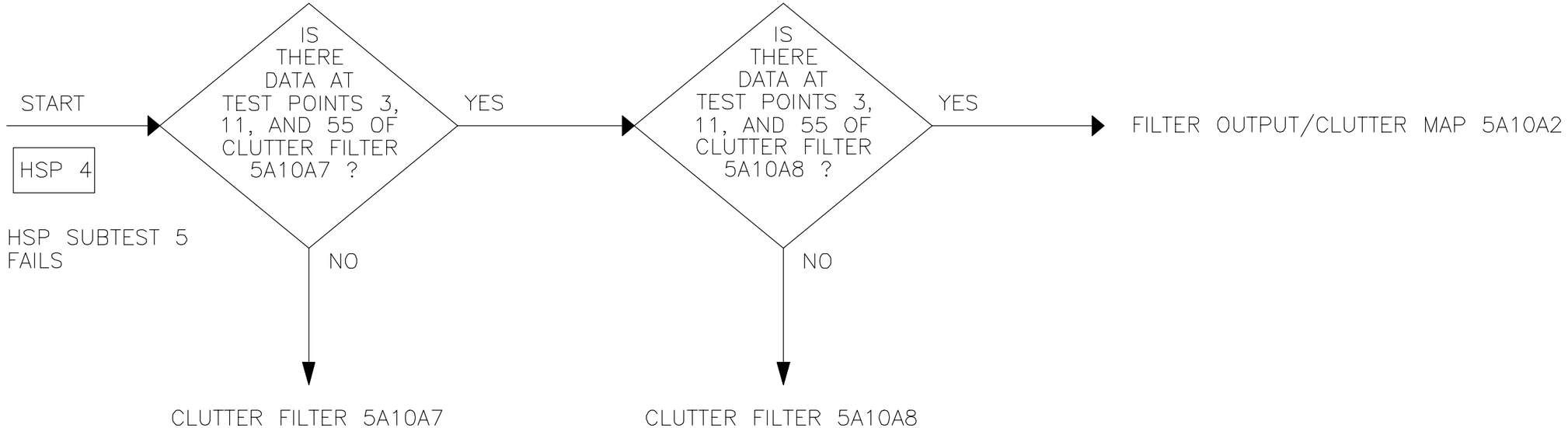


THE TEST POINTS IN SUBTEST 5 ARE CHECKED WITH THE LOGIC PROBE THE SAME WAY THAT PINS ON THE BACKPLANE ARE CHECKED. THE POWER LEADS OF THE LOGIC PROBE CAN BE PLUGGED IN THE SAME LOCATION AS IS USED TO CHECK PINS ON THE BACKPLANE; THE LOGIC PROBES POWER CORD IS LONG ENOUGH TO REACH THE TEST POINTS ON THE FRONT OF THE CARDS.

THE TEST POINTS CHECKED IN SUBTEST 5 CHANGE LOGIC STATES MANY TIMES DURING ONE EXECUTION OF THE SUBTEST.

NX2114

Figure 6-9. HSP Secondary Fault Isolation Flowchart (Sheet 14 of 21)

SPECIFIC NOTE: ◆ – THE AREAS INDICATED BY THIS SYMBOL HAVE BEEN PREVIOUSLY CHECKED AND ARE NOT PART OF THIS SUBTEST.

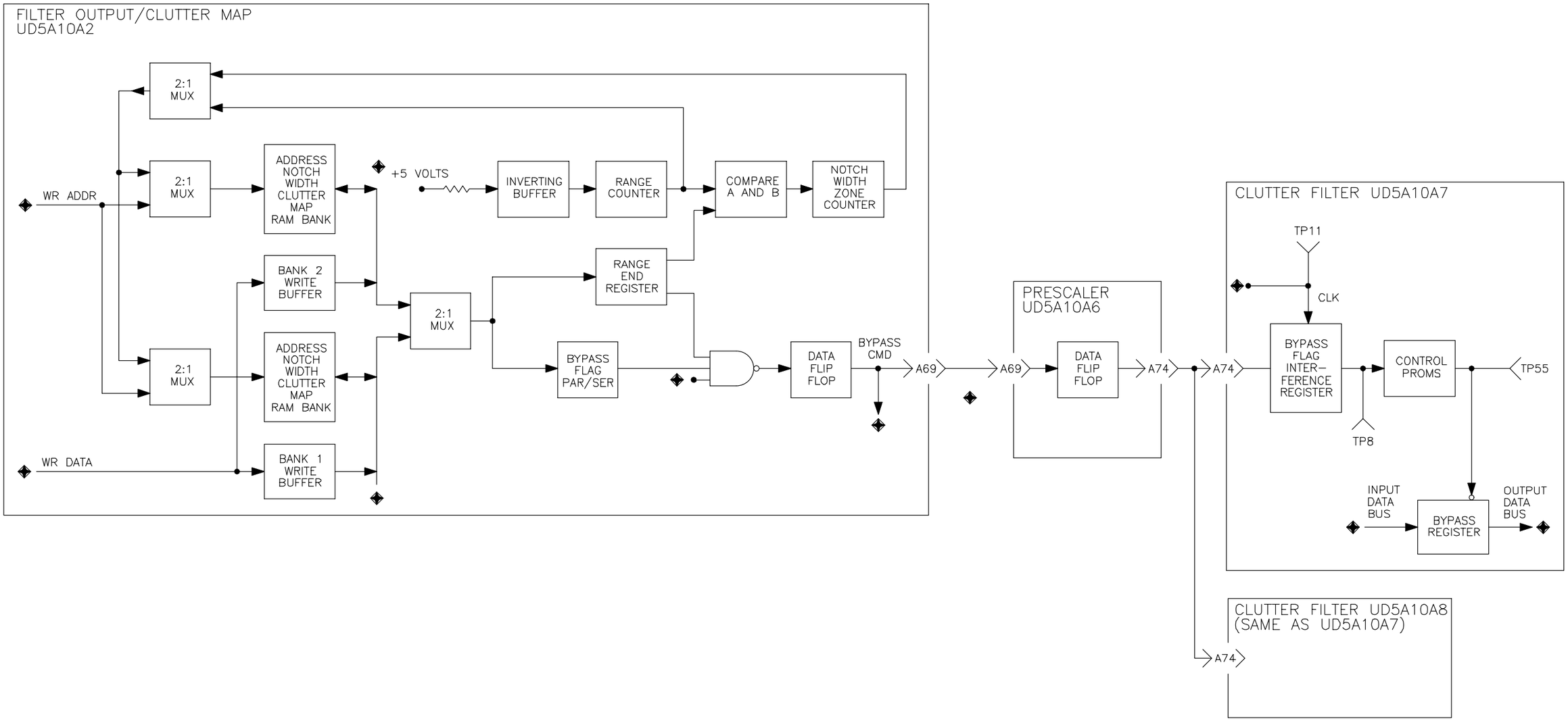


Figure 6-9. HSP Secondary Fault Isolation Flowchart (Sheet 15 of 21)

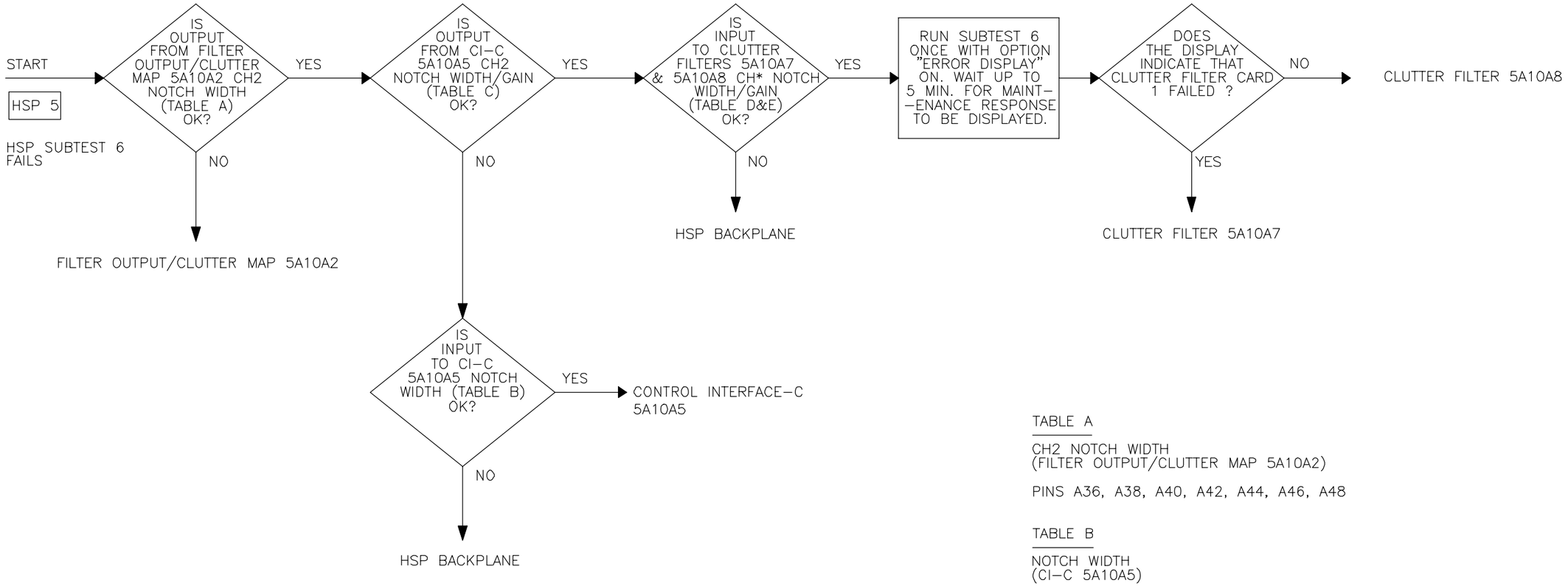


THE TABLES ARE THE PIN LOCATIONS OF DATA BUSES. THE LOGIC STATE ON ANY PIN OF A DATA BUS THAT IS PASSING DATA SHOULD CHANGE MANY TIMES DURING ONE EXECUTION OF SUBTEST 6 UNLESS OTHERWISE SPECIFIED. AN ENABLE SIGNAL, HOWEVER, MAY ONLY BLINK ONCE DURING ONE EXECUTION OF THE SUBTEST.

NX2116

TABLE A

CH2 NOTCH WIDTH
(FILTER OUTPUT/CLUTTER MAP 5A10A2)

PINS A36, A38, A40, A42, A44, A46, A48

TABLE B

NOTCH WIDTH
(CI–C 5A10A5)

PINS A36, A38, A40, A42, A44, A46, A48

TABLE C

CH2 NOTCH WIDTH/GAIN
(CI–C 5A10A5)

PINS A35, A37, A39, A41, A43, A45, A47

TABLE D

CH* NOTCH WIDTH/GAIN
(CLUTTER FILTER 5A10A7)

PINS A35, A37, A39, A41, A43, A45, A47

TABLE E

CH* NOTCH WIDTH/GAIN
(CLUTTER FILTER 5A10A8)

PINS A35, A37, A39, A41, A43, A45, A47

Figure 6-9. HSP Secondary Fault Isolation Flowchart (Sheet 16 of 21)

SPECIFIC NOTES FOR HSP5 : [A] BLOCK SYMBOL WITH LETTERS INSIDE REFER TO PIN INFORMATION IN CORRESPONDING TABLES LOCATED ON SHEET 16.

◆ - THE AREAS INDICATED BY THIS SYMBOL HAVE BEEN PREVIOUSLY CHECKED AND ARE NOT PART OF THIS SUBTEST

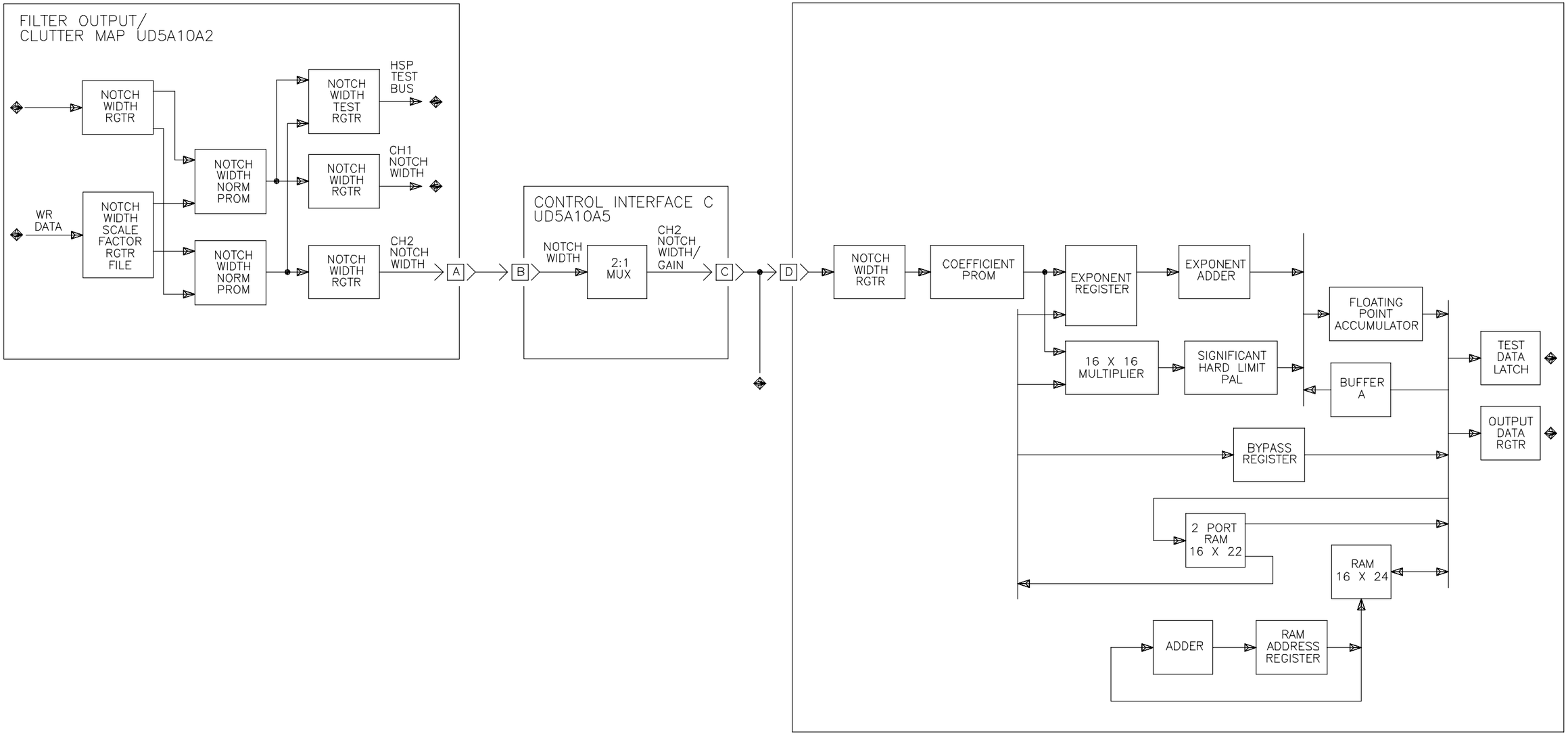


NX2117

Figure 6-9. HSP Secondary Fault Isolation Flowchart (Sheet 17 of 21)

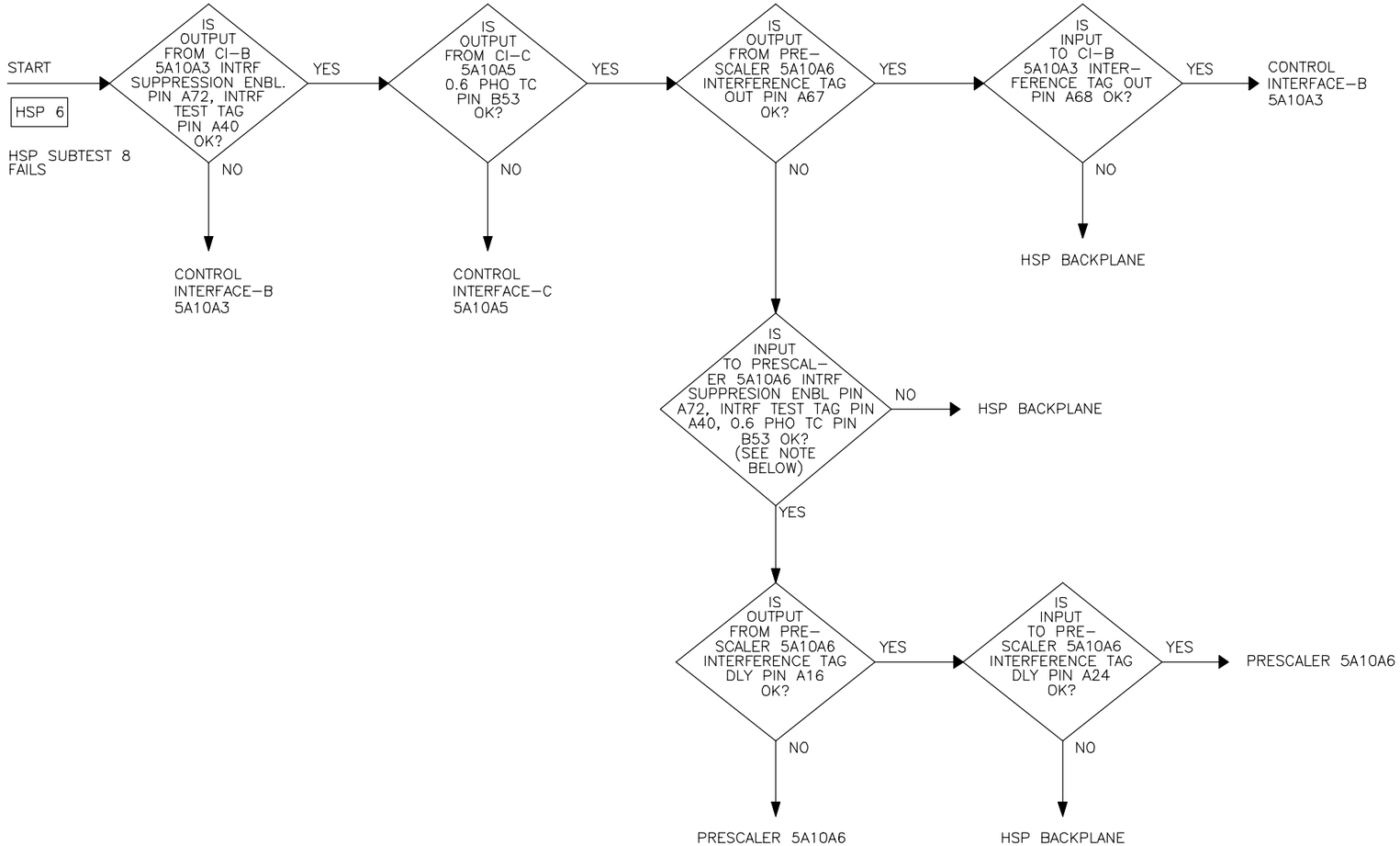


THE LOGIC STATE ON ANY PIN OF A DATA BUS THAT IS PASSING DATA SHOULD CHANGE MANY TIMES DURING ONE EXECUTION OF SUBTEST 6 UNLESS OTHERWISE SPECIFIED. AN ENABLE SIGNAL, HOWEVER, MAY ONLY BLINK ONCE DURING ONE EXECUTION OF THE SUBTEST.

NOTE:

OUTPUT FROM CI–B 5A10A3 PIN A72, AND INPUT TO PRESCALER 5A10A6 PIN A72 BOTH SHOULD BE LOGIC HIGH FOR THE ENTIRE DURATION OF HSP SUBTEST 8.

NX2118

Figure 6-9. HSP Secondary Fault Isolation Flowchart (Sheet 18 of 21)

SPECIFIC NOTE: *– THE AREAS INDICATED BY THIS SYMBOL HAVE BEEN PREVIOUSLY CHECKED AND ARE NOT PART OF THIS SUBTEST.

RDASOT HSP SUBTEST 8

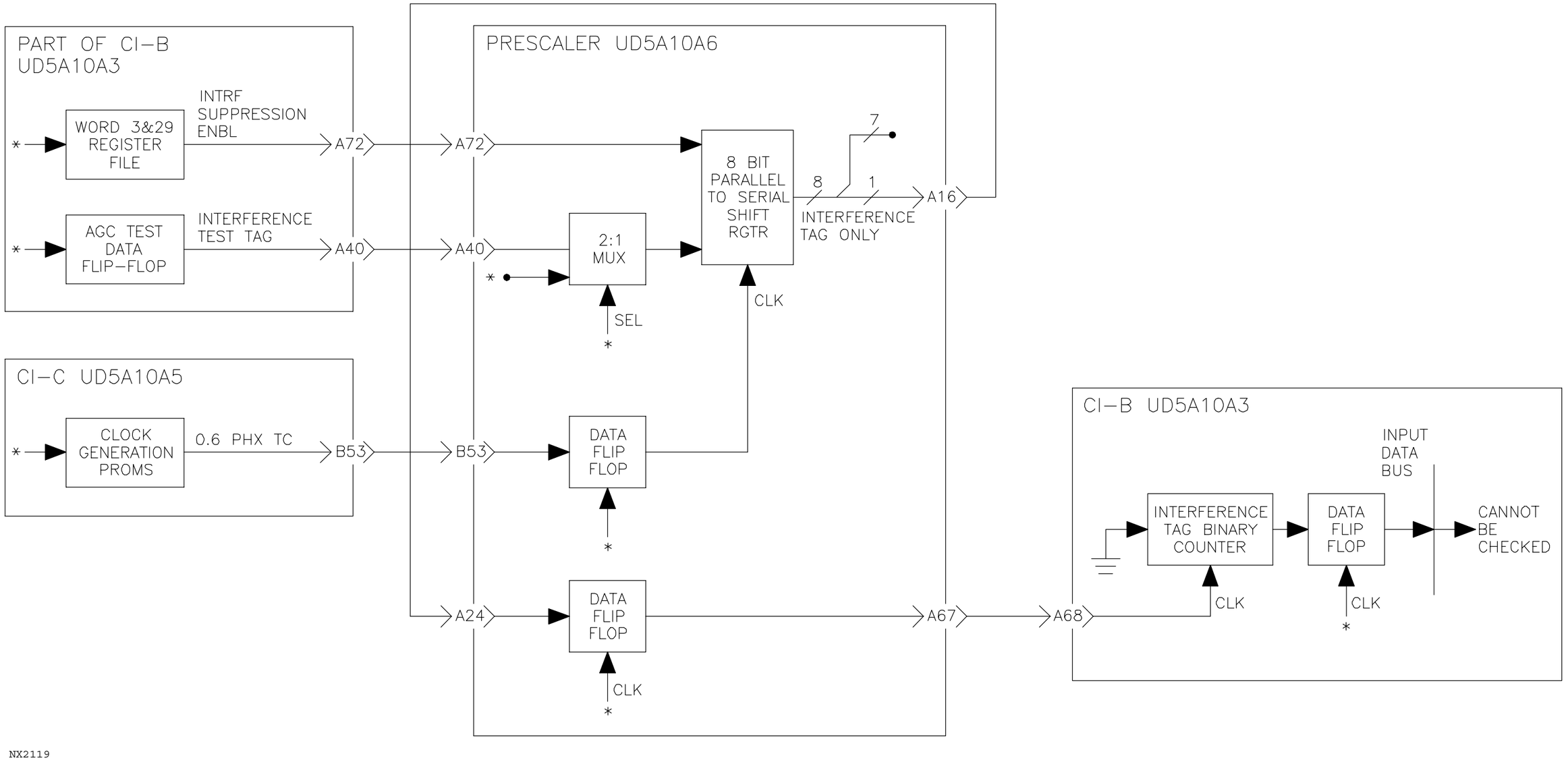


Figure 6-9. HSP Secondary Fault Isolation Flowchart (Sheet 19 of 21)

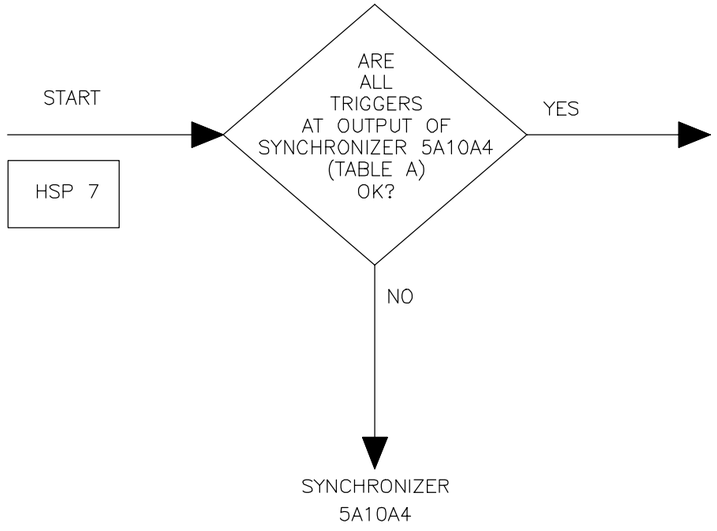


TABLE A

| | | |
|---|---|---|
| RF PULSE START | 5A10A4 | PINS A81,A82 |
| RF DRIVE TRIGGER | 5A10A4 | PINS A83,A84 |
| FILAMENT RESET | 5A10A4 | PINS A85,A86 |
| MODULATOR CHARGE TRIGGER | 5A10A4 | PINS A91,A92 |
| MODULATOR DISCHARGE | 5A10A4 | PINS A93,A94 |
| POST CHARGE TRIGGER | 5A10A4 | PINS A87,A88 |
| TRIGGER CHARGE TRIGGER | 5A10A4 | PINS A97,A98 |

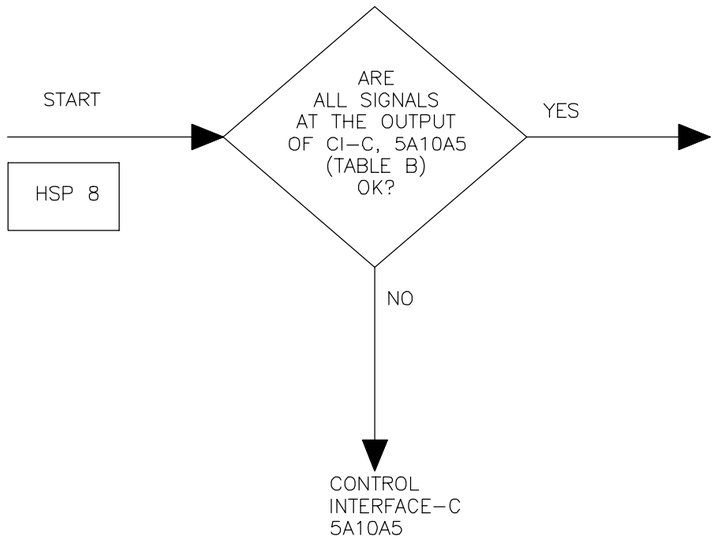


TABLE B

| | | |
|---|---|---|
| LIN SER CLK | 5A10A5 | TP1 PIN 30 |
| LOG SER CLK | 5A10A5 | TP1 PIN 29 |
| LIN A/D CLK | 5A10A5 | TP1 PIN 17 |
| LOG A/D CLK | 5A10A5 | TP1 PIN 14 |
| LIN A/D AGC CLK | 5A10A5 | TP1 PIN 20 |
| LOG A/D AGC CLK | 5A10A5 | TP1 PIN 13 |

NX2120

Figure 6-9. HSP Secondary Fault Isolation Flowchart (Sheet 20 of 21)

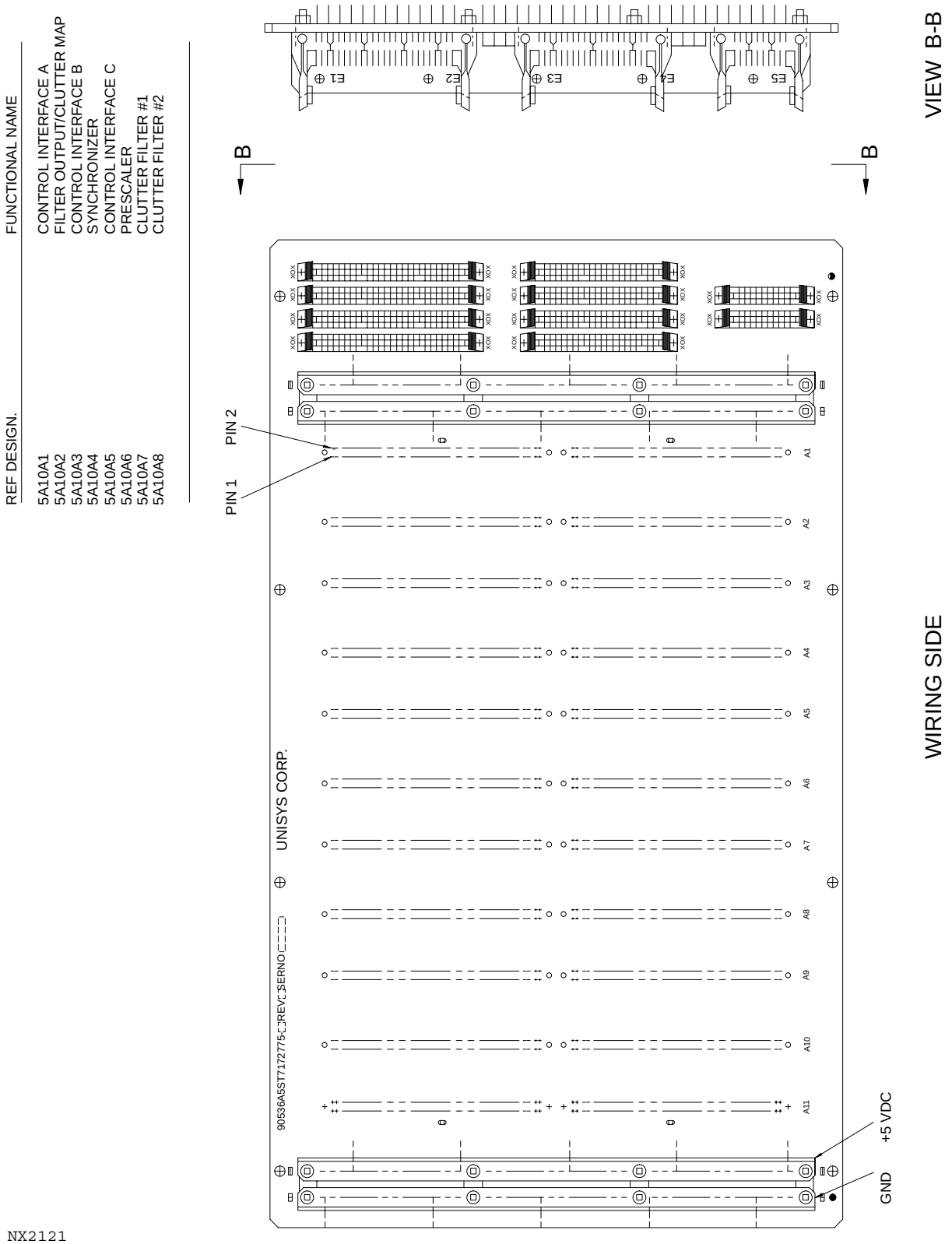


Figure 6-9. HSP Secondary Fault Isolation Flowchart (HSP Backplane) (Sheet 21 of 21)

6-4.6 PROGRAMMABLE SIGNAL PROCESSOR FUNCTIONAL GROUP.

The RDA primary fault isolation flowchart (Figure 6-2) references four secondary fault isolation procedures for the ambiguous fault groups in the programmable signal processor (PSP) functional group. These procedures are designated PSP1 through PSP4 (enclosed in rectangles) and are contained in Figure 6-10. Figure 6-10 identifies the signals to be tested at the LRU interfaces, provides pass/fail criteria for the tested signals as well as a map of the PSP backplane (sheet 9) to aid in troubleshooting. Perform the procedure in paragraph 6-4.5.1 (except substitute PSP for HSP) before proceeding to Figure 6-10. A digital multimeter (Fluke Model 8060A or equivalent) and a logic probe (HP545A or equivalent) are required to perform these procedures.

6-4.7 RDASC FUNCTIONAL GROUP.

The RDA primary fault isolation flowchart (Figure 6-2) references two secondary fault isolation procedures for the ambiguous fault groups in the RDASC functional group. These procedures are designated RDA1 and RDA2 (enclosed in rectangles) and are described in the following paragraphs.

6-4.7.1 RDA1

When a 08XXXX error message appears at the system console, the primary fault isolation procedures references secondary fault isolation procedure RDA1. Table 6-8 lists each individual 08 error message, possible cause, and suggested action. The suggested action should be followed starting with the first possible cause and proceeding down the list to complete fault isolation.

6-4.7.2 RDA2

When a 30XXXX error message appears at the system console, the primary fault isolation procedures references secondary fault isolation procedure RDA2. Table 6-9 lists each individual 30 error message, possible cause, and suggested action. The suggested action should be followed to complete fault isolation.

6-4.7.3 Confidence Test Error Messages. Refer to Table 6-10 for a list of the error messages and their corresponding fault group.

6-4.7.4 M3200 (11) Error Messages. Refer to Table 6-11 for a list of the error messages and suggested action.

Table 6-8. Power Subsystem (08) Error Messages

| Error Messages | Probable Cause | Suggested Action |
|---|---|---|
| ERROR 08 0019 OVER-CURRENT CONDITION, SYSTEM SHUTTING DOWN | An overloaded power supply or a faulty system board. | (1) Check the power supply loads and reduce them if possible.<br>(2) Check bus bars and connections.<br>(3) Check power subsystem. |
| ERROR 08 0021 P5 OVER-VOLTAGE CONDITION, SYSTEM SHUTTING DOWN | A malfunction in the power supply. | (1) Check DC power supply UD5PS5A2.<br>(2) Replace DC power supply UD5PS5A2. |

Table 6-8. Power Subsystem (08) Error Messages (continued)

| Error Messages | Probable Cause | Suggested Action |
|---|---|---|
| ERROR 08 0022<br>P5U OVER-VOLTAGE<br>CONDITION, SYSTEM<br>SHUTTING DOWN | A malfunction in the power supply or a faulty memory module. | (1) Check DC power supply UD5PS5A2.<br>(2) Replace DC power supply UD5PS5A2.<br>(3) Fault isolate memory boards. |
| ERROR 08 0023<br>P12 OVER-VOLTAGE<br>CONDITION, SYSTEM<br>SHUTTING DOWN | A malfunction in the power supply. | (1) Check DC power supply UD5PS5A2.<br>(2) Replace DC power supply UD5PS5A2. |
| ERROR 08 0024<br>FP12 OVER-VOLTAGE<br>CONDITION, SYSTEM<br>SHUTTING DOWN | A malfunction in the power supply or a faulty cooling unit. | (1) Check the cooling units for obstructions.<br>(2) Check DC power supply UD5PS5A2.<br>(3) Replace DC power supply UD5PS5A2. |
| ERROR 08 0035<br>OVER TEMPERATURE<br>CONDITION, SYSTEM<br>SHUTTING DOWN | The room temperature is too high or there is a faulty cooling module (CMB). If temperatures continue to rise, the system may shut down. | (1) Decrease the room's temperature if it is high.<br>(2) Determine cause of excess temperature. |
| ERROR 08 0047<br>BATTERY ERROR<br>(SEE STATUS) | Voltage of the μPSC's battery is below its specified value and is failing to maintain a charge. | (1) Check the STATUS command for the condition of the battery and replace if required.<br>(2) Check CDS Master Module UD5PS5A3 and replace if required. |

Table 6-8. Power Subsystem (08) Error Messages (continued)

| Error Messages | Probable Cause | Suggested Action |
|---|---|---|
| ERROR 08 0048<br>FAN FAILURE, SYSTEM SHUTTING DOWN | Either a malfunctioning or loose temperature sensing wire. | (1) Check the STATUS command for the fan(s) that failed.<br>(2) Check cooling unit connections for proper fit.<br>(3) Inspect cooling unit surroundings for blockage.<br>(4) Check cable connections. Check CDS Patch Panel UD5A15 for loose or broken connections.<br>(5) Replace fan UD5PS5A4. |

Table 6-9. Global (30) Error Messages

| Error Messages | Probable Cause | Suggested Action |
|---|---|---|
| ERROR 30 001<br>CANNOT COMMUNICATE WITH (2)CABINET xx UNANSWERED POLLS | The CDS master receives no polling responses from the specified cabinet. The causative factors are (1) poor patch panel/level 2 link cable connection, (2) no power is being supplied to the indicated cabinet, or (3) the indicated cabinet has a hardware malfunction with the CDS Master Module. | (1) Check the level 2 link cable connections,<br>(2) Ensure power is provided to the specified cabinet, or<br>(3) Replace CDS Master Module UD5PS5A3. |
| ERROR 30 0002<br>CANNOT COMMUNICATE WITH CABINET xx RECEIVE CRC ERRORS | Unintelligible data has been sent to the CDS master from the specified cabinet. This condition can be caused by faulty grounding in the level 2 link cabling or by PSC hardware failure. | (1) Check the level 2 link cable grounding.<br>(2) If the grounding is adequate, replace CDS Master Module UD5PS5A3. |
| ERROR 30 0003<br>CANNOT COMMUNICATE WITH CABINET xx TRANSMIT ERRORS | Unexpected data is received from a polled master. This condition can be caused by excessive noise in the level 2 link or by faulty transmit and receive logic in the CDS master. | (1) Check the level 2 link cabling for secure connections.<br>(2) If the connections are good, check the CDS master's drivers and receivers.<br>(3) Check configuration. |

Table 6-9. Global (30) Error Messages (continued)

| Error Messages | Probable Cause | Suggested Action |
|---|---|---|
| ERROR 30 0004<br>CANNOT COMMUNICATE WITH CABINET LINK 2 DISABLED | A level 2 link has not been established. This condition can be caused by disconnected or damaged level 2 link cabling. | (1) Check the CDS Patch Panel UD5A15 for loose or broken connections. Then check the level 2 link cable connections on each microprocessor. Finally examine the condition of all level 2 link cabling.<br>(2) Check configuration. |
| ERROR 30 0005<br>CANNOT COMMUNICATE WITH CABINET LINK 2 HARDWARE ERRORS | There are loose or questionable connections within the CDS patch panel, or the associated connectors and cabling. This message may also be caused by a universal asynchronous receiver/transmitter (for link 2) within the CDS Master Module. | (1) Check the integrity of all associated connectors and cabling. Inspect the CDS Patch Panel UD5A15 for loose or broken connections.<br>(2) If the trouble persists, replace the CDS Master Module UD5PS5A3. |
| ERROR 30 0006<br>CANNOT COMMUNICATE WITH SLOT# nn LINK 1 UNPOWERED | Information is requested from a level 1 link module while no power is supplied to the link. | Enable the power supply, using either the SET or POWER commands. |
| ERROR 30 0007<br>CANNOT COMMUNICATE WITH SLOT# nn SLOT OFFLINE | Communication was attempted with a device that has been marked off-line. During power up, level 1 link modules send their slot-specific configuration to the master. If any device sends data that does not agree with the information retained in the configuration tables for that device, the device is marked off-line by the master. | (1) Change the configuration data to reflect the modules' actual configuration.<br>(2) If the configurations already agree, troubleshoot the slave module. |

Table 6-9. Global (30) Error Messages (continued)

| Error Messages | Probable Cause | Suggested Action |
|---|---|---|
| ERROR 30 0008<br>CANNOT COMMUNICATE WITH SLOT# nn<br>UNANSWERED POLLS | There is a failed slave unit in slot # nn or a malfunctioning serial port within the CDS Master Module. | (1) If several of these messages appear, the fault is probably associated with the master's serial port. In this case, the CDS Master Module UD5PS5A3 needs replacement. If only one of these messages appears, the problem is local to the indicated slot. Check to ensure that a module is physically in the slot. If so, troubleshoot the module and reseat in the slot.<br>(2) Check CDS Patch Panel UD5A15 for loose or broken connections. |
| ERROR 30 0009<br>CANNOT COMMUNICATE WITH SLOT# nn RECEIVE CRC ERRORS | There is an unacceptable level of noise on the level 1 link. This may be the result of loose connections between the indicated module and the S-bus or a loose PSC/S-bus cable. | (1) Check the cable connection.<br>(2) If satisfactory, check the module/S-bus interface.<br>(3) Check M3200 CPU board UD5A12A4. |
| ERROR 30 000A<br>CANNOT COMMUNICATE WITH SLOT# nn TRANSMIT ERRORS | The causative factors for this message are identical to those that cause message 30 0009. | See error message 30 0009. |
| ERROR 30 000B<br>CANNOT COMMUNICATE WITH SLOT# nn<br>TRANSMITTER FAILURE | Failure of CDS Master Module hardware. | Check and/or replace the CDS Master Module UD5PS5A3. |
| ERROR 30 000D<br>CONFIGURATION MEMORY TEST FAILURE | A cabinet has been added to system, which attempted to allocate a defective S-bus data set in RAM. | Reconfigure the system to allow the allocated space to be used more efficiently. Review configuration and change configuration data to reflect actual configuration using SET command. |

Table 6-9. Global (30) Error Messages (continued)

| Error Messages | Probable Cause | Suggested Action |
|---|---|---|
| ERROR 30 000E CONFIGURATION MISMATCH, CABINET = xx | A discrepancy exists between the configuration that the CDS master has retained for that cabinet and the configuration that the specified cabinet sent to the CDS master on power-up. | If the configuration of the specified cabinet is known, use the REVIEW and STATUS commands to determine the contents of the configuration tables of both cabinets. Then update the tables to reflect the true configuration. If the exact cabinet configuration is not known, examine the system physically. Then use the REVIEW and STATUS commands. Another method is to CLEAR the configuration of the affected cabinet. Then RESET the same cabinet. |
| ERROR 30 000F CONFIGURATION MISMATCH ERROR | If no module is in the slot, this message indicates that no space is available in the configuration tables for the entry. Otherwise, the message indicates that there is a module type conflict between what is physically in the slot and what is entered in the tables for that slot. | Inspect the physical configuration of the system and re-input the configuration data accordingly. |
| ERROR 30 0010 CONFIGURATION UPDATE ERROR | Operator has attempted to add a device when the CDS configuration tables were full. | Clear the cabinet configuration and re-input the new cabinet configuration. |
| ERROR 30 0011 LEVEL 1 LINK CLOCK FAILURE | The PSC cannot establish the level 1 link baud rate. This is probably caused by a failure of the baud rate clock (BRCLK) signal. | (1) Check clock signal line.<br>(2) Replace the CDS Master Module UD5PS5A3. |
| ERROR 30 0012 PLEASE CLEAR CONFIGURATION OF MASTER OR CABINET xx | This message is generally displayed after error message 30 000E and informs the operator of a configuration conflict between the CDS master and the master in the indicated cabinet. | Review the cabinet configurations of both cabinets and update the configuration tables accordingly. |

Table 6-9. Global (30) Error Messages (continued)

| Error Messages | Probable Cause | Suggested Action |
|---|---|---|
| ERROR 30 0013<br>UNABLE TO ADD DEVICE TO CONFIGURATION | There is either a programming bug that causes the message to be too long or not enough available space is in the configuration tables. | Re-enter the configuration or reorganize the configuration for the S-bus. |
| ERROR 30 0014<br>UPSC CONFIGURATION MISMATCH | The configuration contained in the tables differs from what the master detects on power-up. This could be caused by some module being added or deleted while the system was shut down or the S-bus was not plugged in. | Reconnect and/or reseat the missing module or use the REVIEW, STATUS, and SET commands to re-enter the appropriate configuration data. |

Table 6-10. Basic Confidence Test Error Messages.

| Basic Confidence Test Error Messages | Fault Group |
|---|---|
| 8800 thru 8891 | M3200 |
| 88A0 thru 88AF | MPC, DMI, M3200, CDS Master Module |
| 88FF | M3200 |
| B2 thru BA | M3200 |
| C0 thru C6 | M3200 |

Table 6-11. M3200 (11) Error Messages

| Error # | Message | Suggested Action |
|---|---|---|
| 11 ØØØ1 | NO INITIAL RESPONSE FROM MICROCODE | Replace M3200 CPU board UD5A12A4 |
| 11 ØØØ2 | ERROR MODIFYING LOCATION COUNTER | Reenter command or option. Reboot the processor. Replace M3200 CPU board UD5A12A4. |

Table 6-11. M3200 (11) Error Messages (continued)

| Error # | Message | Suggested Action |
|---|---|---|
| 11 ØØØ3-ØØ1Ø | NO RESPONSE FROM MICROCODE<br>CMD: YYYYYY YYYYYY | Reenter command or option. Reboot the processor. Replace M3200 CPU board UD5A12A4. |
| 11 ØØ11-ØØ1E | ERROR COMMUNICATING TO MICROCODE<br>DURING YYYYYY YYYYYY<br>EXPECTED XX CMD BYTE<br>RECEIVED XX CMD BYTE FROM MICROCODE | Reenter command or option. Reboot the processor. Replace M3200 CPU board UD5A12A4. |
| 11 ØØ1F-ØØ2C | ERROR COMMUNICATING TO MICROCODE<br>DURING YYYYYY YYYYYY<br>EXPECTED DATA BYTE<br>RECEIVED XX CMD BYTE FROM MICROCODE | Reboot the processor. Replace M3200 CPU board UD5A12A4. |
| 11 ØØ2D ØØ3A | ERROR COMMUNICATING TO MICROCODE<br>DURING YYYYYY YYYYYY<br>EXPECTED XX CMD BYTE<br>RECEIVED DATA BYTE FROM MICROCODE | Reboot the processor. Replace M3200 CPU board UD5A12A4. |
| 11 ØØ3B | ERROR COMMUNICATING TO MICROCODE<br>UNEXPECTED CMD BYTE RECEIVED FROM MICROCODE | Reboot the processor. Replace M3200 CPU board UD5A12A4. |
| 11 ØØ3C | ERROR COMMUNICATING TO MICROCODE<br>UNEXPECTED DATA BYTE RECEIVED FROM MICROCODE | Reboot the processor. Replace M3200 CPU board UD5A12A4. |
| 11 ØØ3D | NO WARM/COLD STATUS RECEIVED FROM CDS MASTER | Reboot the processor. |
| 11 ØØ3E | MICRODIAGNOSTIC SUBTEST XX FAILURE | Replace M3200 CPU board UD5A12A4. |
| 11 ØØ3F | PROBLEM LOCATING SPECIFIED BANK | Replace M3200 CPU board UD5A12A4. |

Table 6-11. M3200 (11) Error Messages (continued)

| Error # | Message | Suggested Action |
|---|---|---|
| 11 ØØ4Ø | ERROR LOADING MICROCODE | Reenter command or option. Reboot the processor. Replace M3200 CPU boards UD5A12A4. |
| 11 ØØ41 | PROBLEM WRAPPING AROUND DATA THROUGH SCAN RING | Reboot the processor. Replace M3200 CPU board UD5A12A4. |
| 11 ØØ42 | SCANNED DATA = DDDDDDDDDDDDDDDDDDDDDDDDDDDD CONTROL STORE ADDRESS = AAAA ERROR BYTES = PARITY ERROR ON BYTES = 28ØØ | Reboot the processor. Replace M3200 CPU board UD5A12A4. |
| 11 ØØ43 | ERROR WRITING MICROCODE TO CONTROL STORE AT ADDRESS AAAA EXPECTED DATA = EEEEEEEEEEEEEEEEEEEEEEEEEEEE ACTUAL DATA = AAAAAAAAAAAAAAAAAAAAAAAAAAAA | Reboot the processor. Replace M3200 CPU board UD5A12A4. |
| 11 ØØ44 | INSTRUCTION CACHE PARITY ERROR | Reboot the processor. Replace M3200 CPU board UD5A12A4. |
| 11 ØØ45 | DATA CACHE PARITY ERROR | Reboot the processor. Replace M3200 CPU board UD5A12A4. |
| 11 ØØ46 | CONTROL STORE PARITY ERROR | Replace M3200 CPU board UD5A12A4. |
| 11 ØØ47 | MAP RAM PARITY ERROR | Replace M3200 CPU board UD5A12A4. |
| 11 ØØ48 | A-BUS PARITY ERROR | Reboot the processor. Replace M3200 CPU board UD5A12A4. |

Table 6-11. M3200 (11) Error Messages (continued)

| Error # | Message | Suggested Action |
|---|---|---|
| 11 ØØ49 | B-BUS PARITY ERROR | Reboot the processor. Replace M3200 CPU board UD5A12A4. |
| 11 ØØ4A | DUR PARITY ERROR | Reboot the processor. Replace M3200 CPU board UD5A12A4. |
| 11 ØØ4B | MICROCODE MEMORY TEST FAILURE | Reboot the processor. Fault isolate the M3200 CPU board UD5A12A4. |
| 11 ØØ4C | PROBLEM WRITING TO PROCESSOR - DATA OVERFLOW | Reenter command or option. Note occurrence of this message and other errors. Reboot the processor. |
| 11 ØØ4D | HALT FAILED | Reinitialize the processor using the "Reset" command. Reenter command or option. |
| 11 ØØ4E | CHECKSUM FAILURE FOR LOAD! CONTROL STORE MEMORY TEST INITIATED | Note the occurrence of this message and observe other errors. |
| 11 ØØ4F | LOAD FAILURE! CONTROL STORE MEMORY TEST PASSED | Reboot the processor. Replace M3200 CPU board UD5A12A4. |
| 11 ØØ5Ø | MICROCODE DATA STACK OVERFLOW OR UNDERFLOW | Reboot the processor. Replace M3200 CPU board UD5A12A4. |
| 11 ØØ51 | MICROCODE SEQUENCER STACK OVERFLOW OR UNDERFLOW | Reboot the processor. Replace M3200 CPU board UD5A12A4. |

Table 6-11. M3200 (11) Error Messages (continued)

| Error # | Message | Suggested Action |
|---|---|---|
| 11 ØØ52 | RECURSIVE MACHINE MALFUNCTION FAULT | Check cable connections. Fault isolate memory boards. |
| 11 ØØ53 | VAT PARITY FAULT | Reboot the processor. Replace M3200 CPU board UD5A12A4. |
| 11 ØØ54 | S-BUS I/O ERROR DETECTED | Fault isolate DMI board UD5A12A5 and M3200 CPU board UD5A12A4. |
| 11 ØØ55 | ILLEGAL MICROADDRESS BEING EXECUTED | Reboot the processor. Replace M3200 CPU board UD5A12A4. |

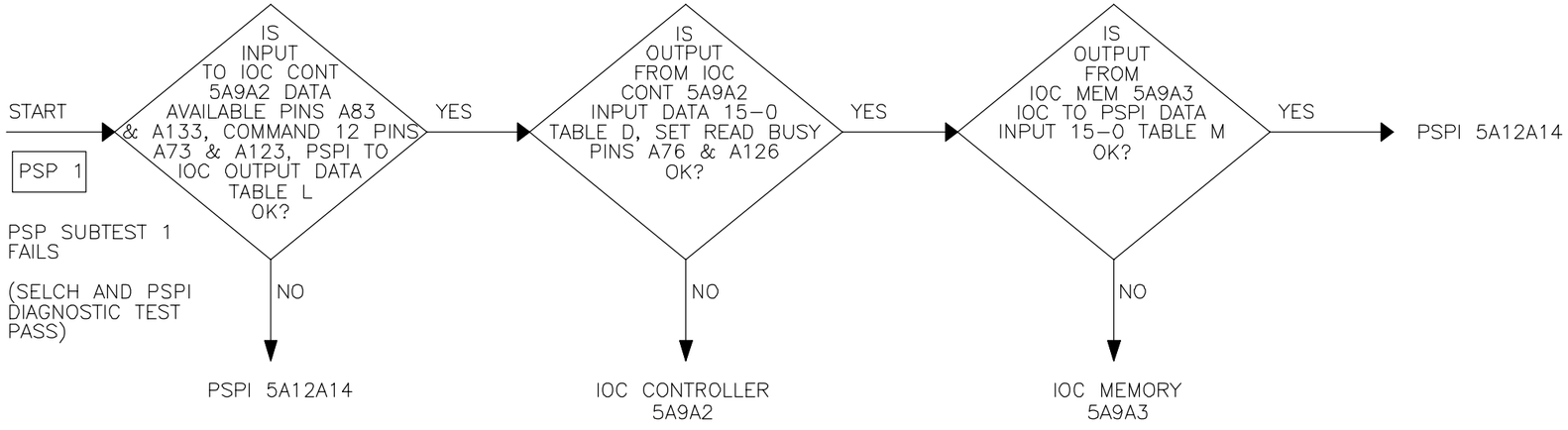


TABLE D

INPUT DATA (15–0)
(IOC CONTROLLER 5A9A2)

PINS B66–B69, B72–B75, B116–B119
B122–B125

TABLE L

PSPI TO IOC OUTPUT DATA (15–0, +&–)
(IOC CONTROLLER 5A9A2)

PINS A52–A54, A56–A64, A66–A69,
A102–A104, A106–A114, A116–A119

TABLE M

IOC TO PSPI DATA INPUT (15–0, +&–)
(IOC MEMORY 5A9A3)

PINS B16–B19, B22–B29, B31–B34,
B76–B79, B81–B84, B126–B129,
B131–B134

NOTE:

PIN A73 SHOULD BE LOGIC LOW
PIN A76 SHOULD BE LOGIC HIGH
PIN A123 SHOULD BE LOGIC HIGH
PIN A126 SHOULD BE LOGIC LOW

NOTE:

ALL SIGNALS THAT ARE SUPPOSED TO CHANGE LOGIC STATES FOR PSP SUBTEST 1 SHOULD CHANGE LOGIC STATES AT A RATE OF AT LEAST ONCE FOR EACH SUBTEST EXECUTION (AT LEAST ONCE PER SECOND)

NX2122

Figure 6-10. PSP Secondary Fault Isolation Flowchart (Subtest 1) (Sheet 1 of 9)

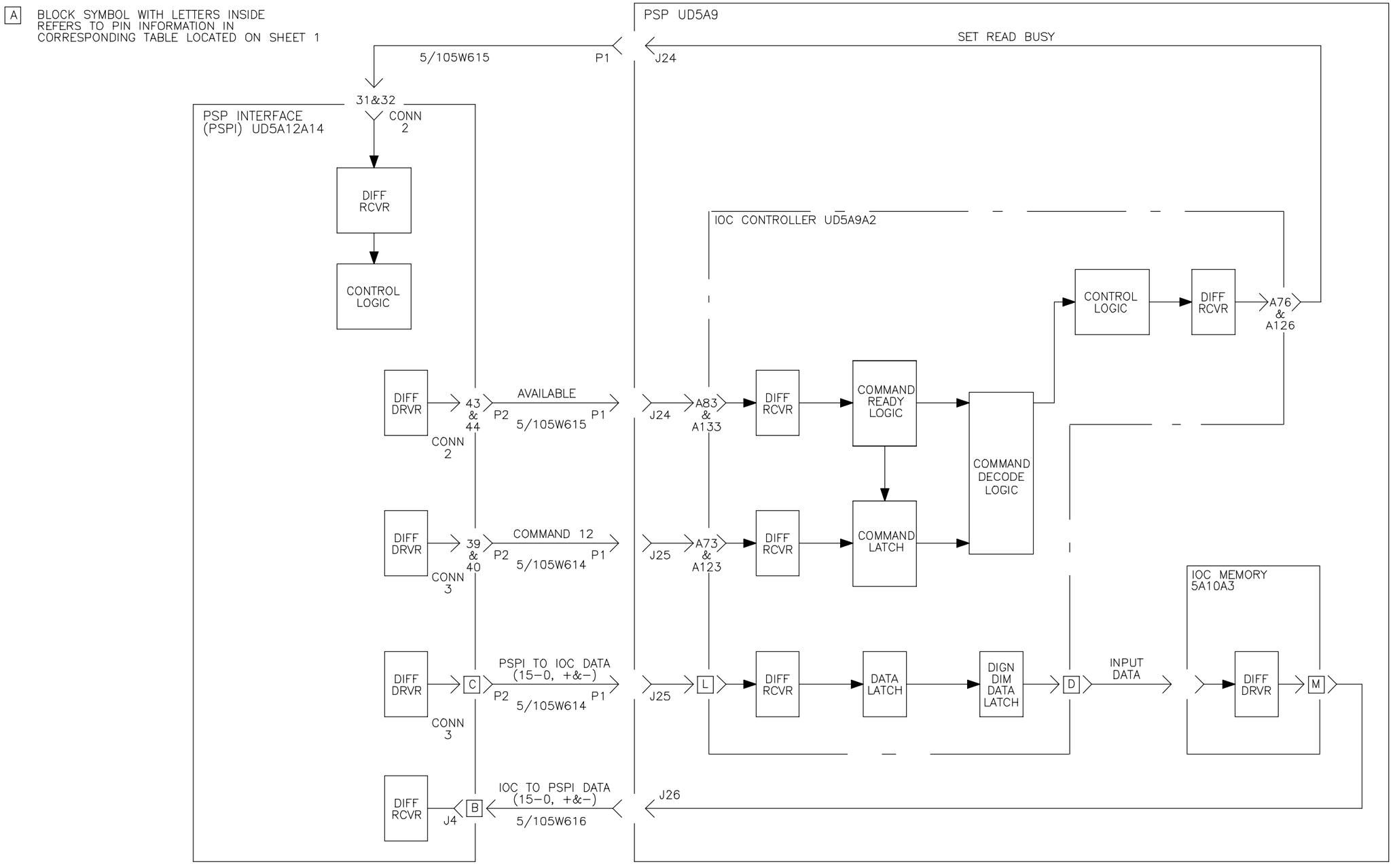


Figure 6-10. PSP Secondary Fault Isolation Flowchart (Subtest 1 Block Diagram) (Sheet 2 of 9)

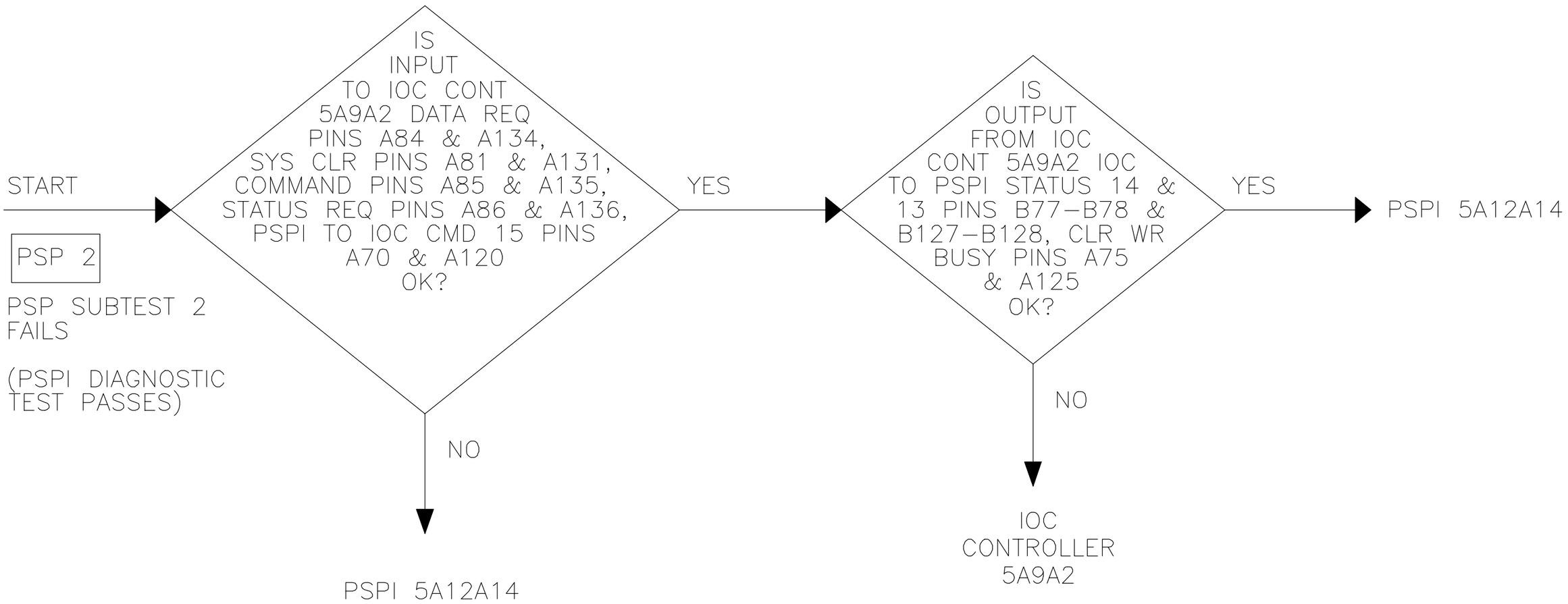


Figure 6-10. PSP Secondary Fault Isolation Flowchart (Subtest 3) (Sheet 3 of 9)

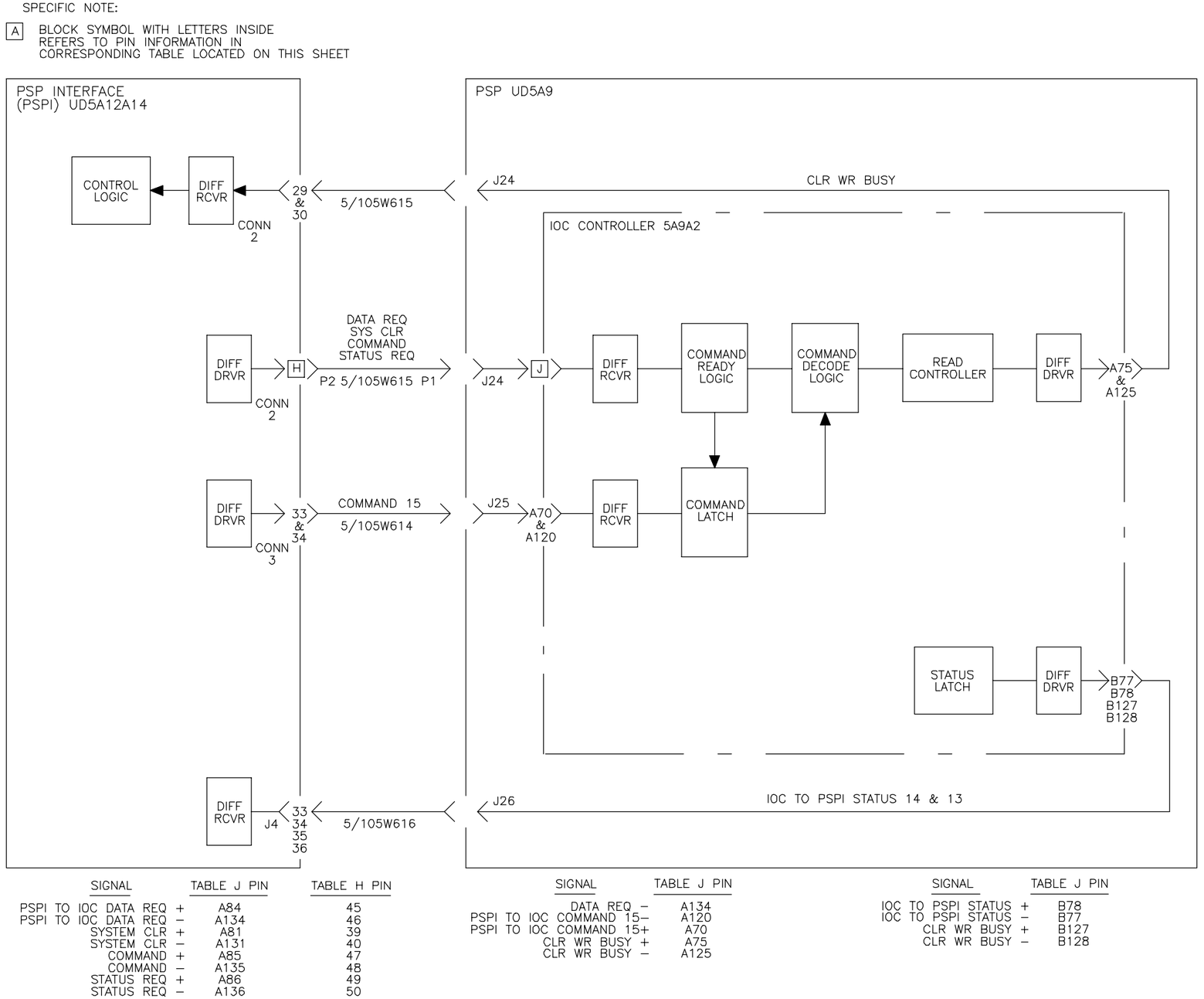


| SIGNAL | TABLE J PIN | TABLE H PIN |
|---|---|---|
| PSPI TO IOC DATA REQ + | A84 | 45 |
| PSPI TO IOC DATA REQ – | A134 | 46 |
| SYSTEM CLR + | A81 | 39 |
| SYSTEM CLR – | A131 | 40 |
| COMMAND + | A85 | 47 |
| COMMAND – | A135 | 48 |
| STATUS REQ + | A86 | 49 |
| STATUS REQ – | A136 | 50 |

| SIGNAL | TABLE J PIN |
|---|---|
| DATA REQ – | A134 |
| PSPI TO IOC COMMAND 15– | A120 |
| PSPI TO IOC COMMAND 15+ | A70 |
| CLR WR BUSY + | A75 |
| CLR WR BUSY – | A125 |

| SIGNAL | TABLE J PIN |
|---|---|
| IOC TO PSPI STATUS + | B78 |
| IOC TO PSPI STATUS – | B77 |
| CLR WR BUSY + | B127 |
| CLR WR BUSY – | B128 |

NX2125

Figure 6-10. PSP Secondary Fault Isolation Flowchart (Subtest 2 Block Diagram) (Sheet 4 of 9)

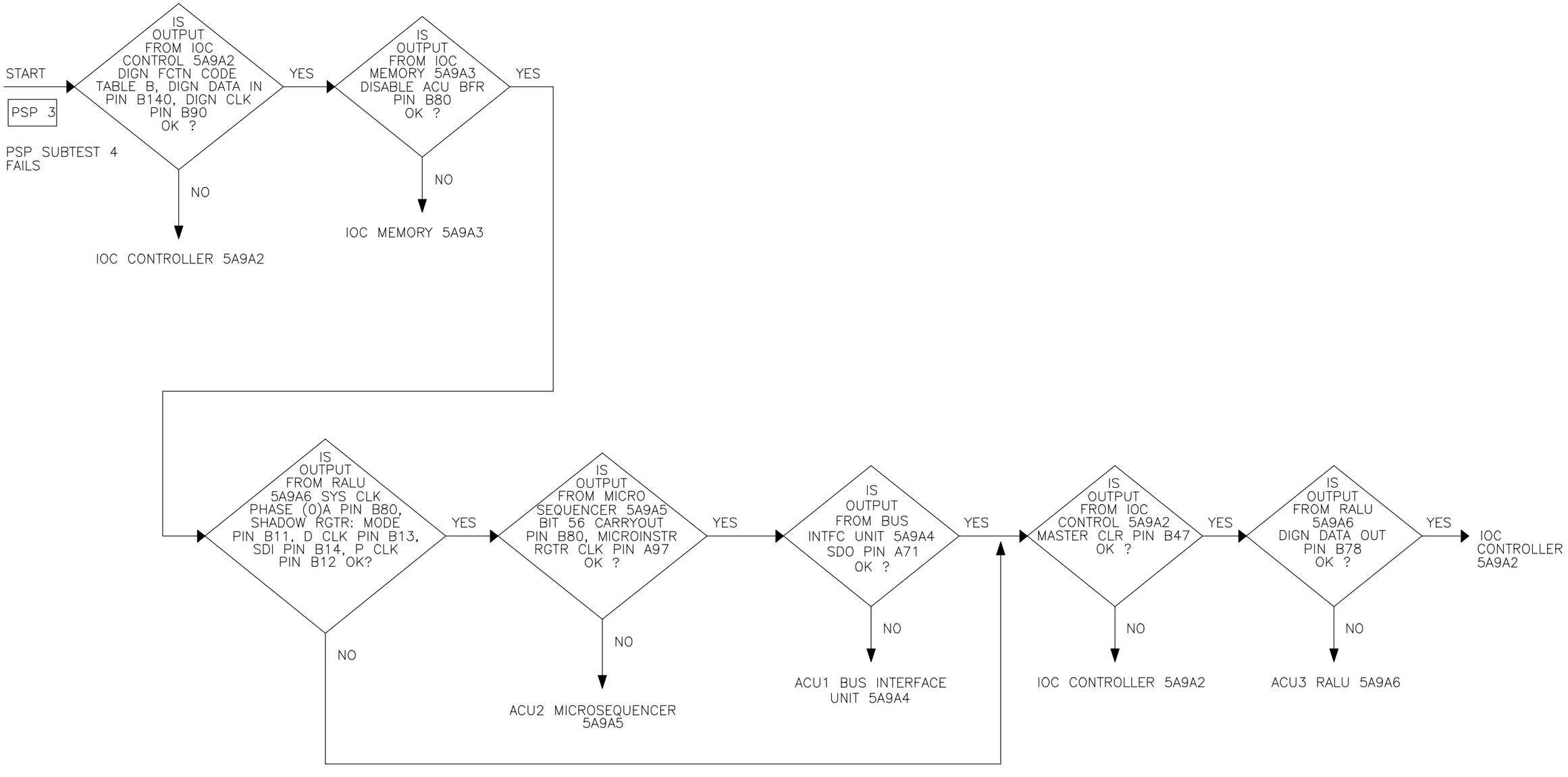


Figure 6-10. PSP Secondary Fault Isolation Flowchart (Subtest 4) (Sheet 5 of 9)

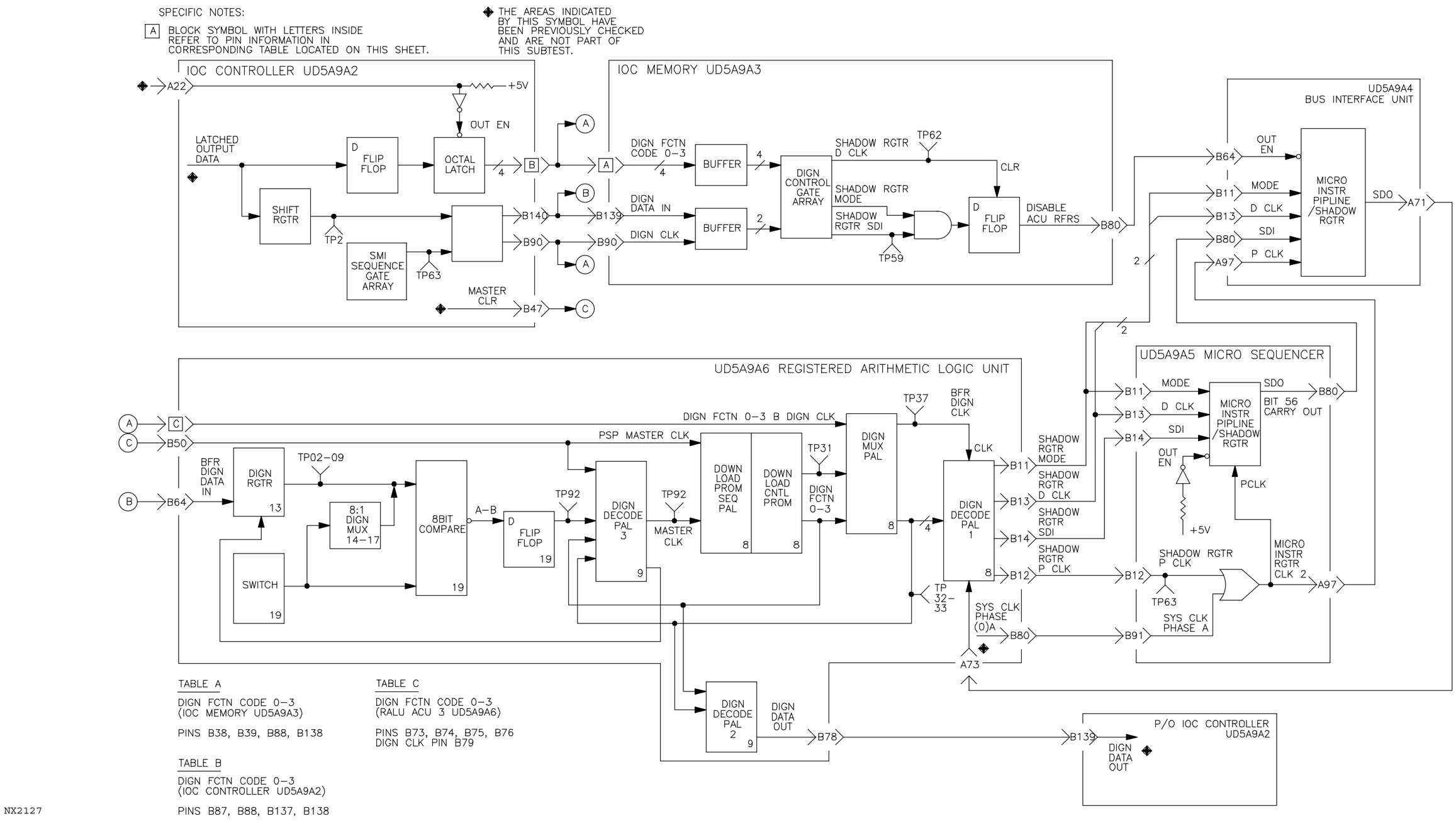


Figure 6-10. PSP Secondary Fault Isolation Flowchart (Subtest 4 Block Diagram) (Sheet 6 of 9)

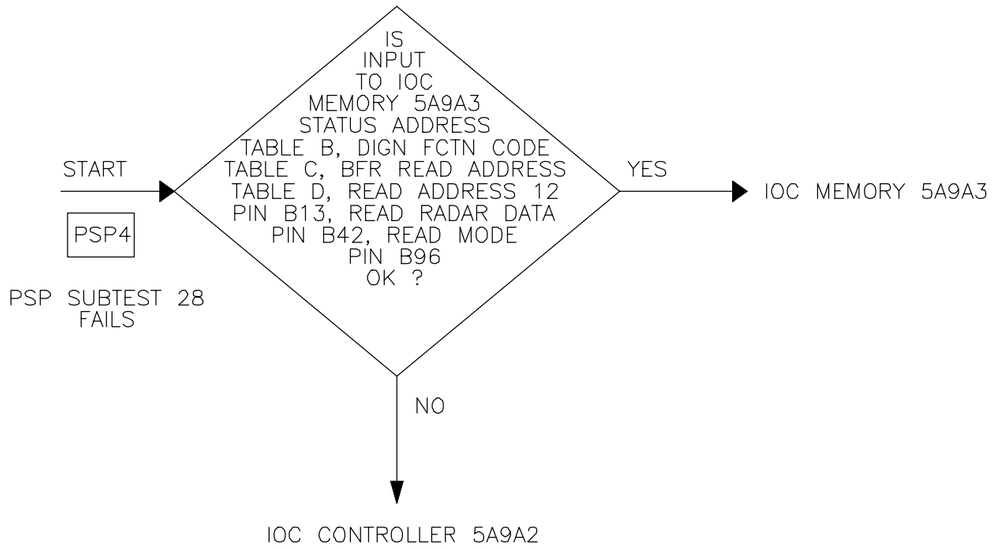


TABLE B

STATUS ADDRESS
(IOC MEMORY 5A9A3)

PINS B91–B94,B98,B99,B141–B144,B148,B149

TABLE C

DIGN FCTN CODE
(IOC MEMORY 5A9A3)

PINS B38,B39,B88,B138

TABLE D

BFR READ ADDRESS
(IOC MEMORY 5A9A3)

PINS B2–B4,B51–B54,B101–B104,B106

TABLE E

BFR READ ADDRESS
(IOC CONTROLLER 5A9A2)

PINS B58–B63, B108–B112

TABLE F

DIGN FCTN CODE
(IOC CONTROLLER 5A9A2)

PINS B87, B138, B137, B88

TABLE G

STATUS ADDRESS
(IOC CONTROLLER 5A9A2)

NX2128

PINS B91–B94,B98,B99,B141–B144

Figure 6-10. PSP Secondary Fault Isolation Flowchart (Sheet 7 of 9)

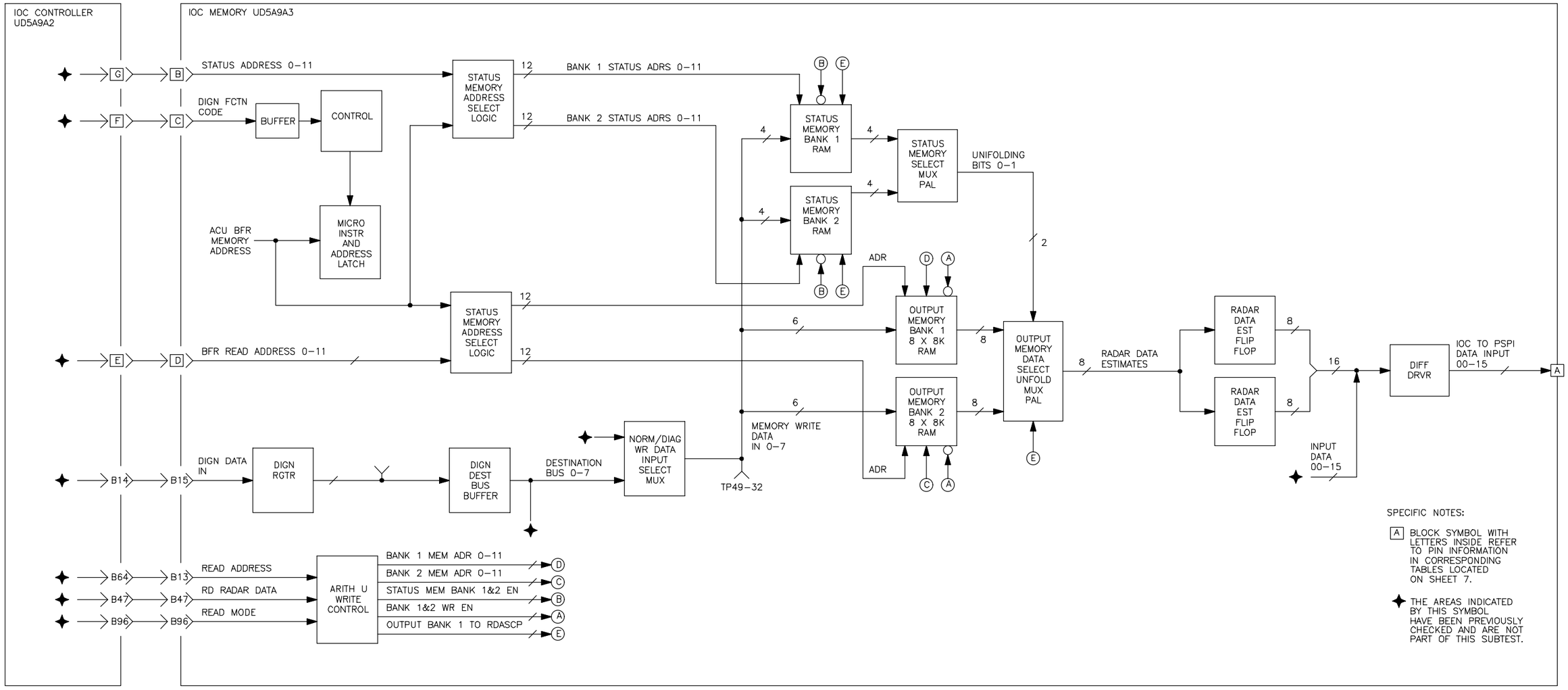


Figure 6-10. PSP Secondary Fault Isolation Flowchart (Subtest 28 Block Diagram) (Sheet 8 of 9)

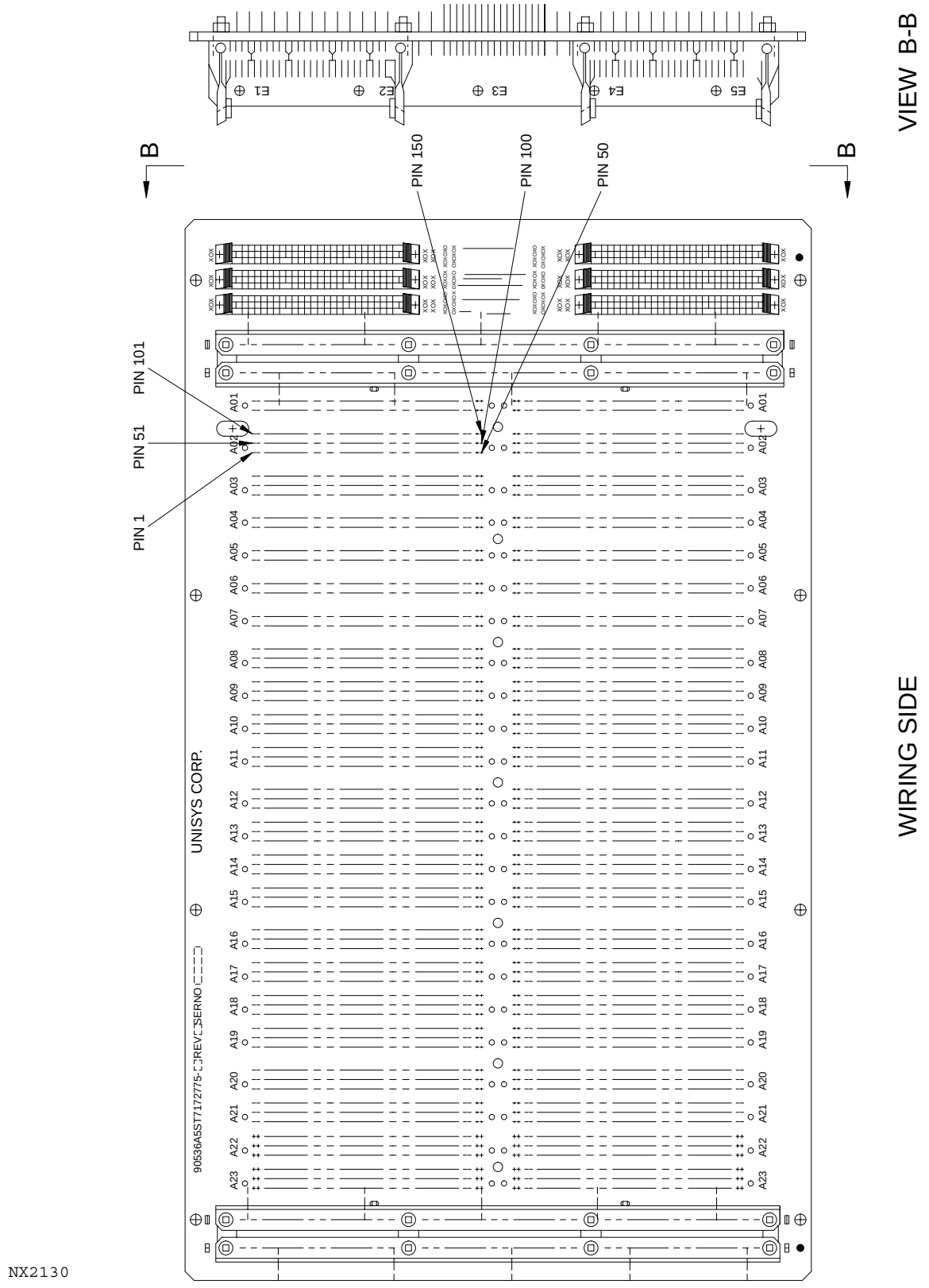


Figure 6-10. PSP Secondary Fault Isolation Flowchart (PSP Backplane) (Sheet 9 of 9)

6-4.8 MAINTENANCE PANEL/DAU FUNCTIONAL GROUP.

The RDA primary fault isolation flowchart (Figure 6-2) references two secondary fault isolation procedures for the ambiguous fault groups in the maintenance console functional group. These procedures are designated M1 and M2 (enclosed in rectangles) and are described in the following paragraphs.

A multimeter (Fluke Model 8060A or equivalent) and a jumper are needed to perform these procedures.

**NOTE**

The following paragraphs describe troubleshooting procedures relative to a single channel system. Refer to Figure FO5-20, sheets 2 and 3 and Figure FO5-22, sheet 2 to aid in troubleshooting. **Redundant sites**, refer to Figure FO5-21, sheets 2 through 4 and Figure FO5-23, sheet 2 due to cable, pin, and jack differences, such as cables W15/115 for W11, W10/110 for W10, and 2W27 for 2W21, and jack UD5J13 for UD5J9.

6-4.8.1 Equipment and Tools Required.

1. Screwdriver set, Phillips-tip
2. Fluke 87 digital multimeter (or equivalent)
3. Jumpers, 2 each (20/22 ga wire with both male and female connectors)
4. 20-foot extension ladder
5. Harness, safety

6-4.8.2 Initial Conditions/Preliminary Setup.

1. Perform steps 1 through 5.g of Table 6-13 to obtain local control of the RDA, place the transmitter in standby, idle the Archive II device, and to terminate the applications software.

6-4.8.3 M1.

1. At the Maintenance Panel UD5A2, open the swing out panel to gain access to the rear of the panel.

**NOTE**

Use Figure FO5-20, sheet 2 to aid in troubleshooting. Redundant sites, use Figure FO5-21, sheet 2.

2. At the rear of the Maintenance Panel UD5A2, locate R2, XMTR Power Meter Adjustment potentiometer. With the multimeter set to measure DC volts, measure between the following points and record the voltage level:

a. Pin 1 and GND: _____ Should be +15 Vdc.

b. Pin 3 and GND: _____ Should be -15 Vdc.

c. Pin 2 and GND: _____ XMTR Power Head Adjust (variable)

3. While measuring the DC voltage between UD5A2R2 pin 2 and ground, adjust R2 slowly and observe measured voltage.

   a. If voltage does not change, UD5A2R2 is faulty.

   b. If voltage does change, reset voltage to reading obtained in 2.c and proceed to step 4.

4. Open the front Receiver Cabinet UD4 door and locate the Transmitter Power Monitor UD4A26. Remove plug P1 from UD4A26J2 at bottom of power monitor.

5. At the disconnected power monitor plug, use the multimeter to measure the DC voltage between the following pins and ground (use same ground point as used in step 2. The voltages should be the same as in step 2.

   a. Pin A and GND: _____ Should be +15 Vdc.

   b. Pin K and GND: _____ Should be -15 Vdc.

   c. Pin D and GND: _____ XMTR Power Head Adjust (variable)

6. While measuring the DC voltage between power monitor plug pin D and ground, adjust UD5A2R2 slowly and observe measured voltage.

   a. If voltage does not change or is absent, refer to Figure FO5-20, sheet 2 to troubleshoot a cabling problem. (Redundant sites, refer to Figure FO5-21, sheet 2.)

   b. If voltage does change, reset voltage to reading obtained in 2.c. If the same voltages are obtained, this indicates that the cabling and pin connections from the Maintenance Panel UD5A2 to the Transmitter RF Power Monitor UD4A26 are functioning properly. Proceed to step 7.

7. Reconnect power monitor plug P1 to UD4A26J2.

8. At the rear of the Receiver Cabinet UD4, open the door and locate the DAU.

9. Remove the six screws securing DAU cover plate using a Phillips screwdriver. Set the DAU cover plate and screws aside.

10. At the far right side of the DAU backplane, locate connector XA2A (top set of pins). Using the multimeter set on DC millivolts range, measure the XMTR Power Monitor Output voltage between pins A19 and A20 and record below.

    XMTR Power Monitor Output voltage _____

11. While measuring the DC voltage between pins A19 and A20, adjust UD5A2R2 slowly and observe measured voltage.

    a. If voltage does not change, the Transmitter Power Monitor UD4A26 is faulty. Proceed to step 12.

    b. If voltage does change, the DAU Analog Card UD5A3A2 is faulty.

    c. After replacing the Analog Card UD5A3A2, if the problem still exists, set the XMTR Power Monitor Output voltage equal to the ANT Power Monitor Output voltage.

        (1) Using the multimeter set on DC millivolts range, measure the ANT Power Monitor Output voltage between pins A17 (black lead) and A18 (red lead) and record below.

            ANT Power Monitor Output voltage _____

            **NOTE**

            The polarity of A19 and A20 is opposite from A17 and A18.

        (2) Using the multimeter set on DC millivolts range, measure the XMTR Power Monitor Output voltage between pins A20 (black lead) and A19 (red lead).

        (3) At the Maintenance Panel UD5A2, adjust UD5A2R2 for the same voltage as recorded in step 11.c.(1).

    d. Bring up the RDA applications program by entering **RDAUP<Return>** at the RDA System Console.

    e. Press the **<Shift>** and **<Port>** keys **simultaneously** to access the RDA Applications Terminal.

    f. At the RDA Applications Terminal command and parameter lines, enter **DIPD<Tab>XMT<Return>** to display the Transmitter Performance Data.

    g. If the XMTR Power Meter Zero reading is close to the ANT Power Meter Zero reading, then the analog card is good. Proceed to paragraph 6-6.27 to perform RDA Power Monitor Bias Adjustment.

    h. If the XMTR Power Meter Zero reading is still zero, then the replacement DAU Analog Card UD5A3A2 is defective.

12. At the Maintenance Panel UD5A2, set the DAU Power switch to **OFF**.

13. Using the multimeter set to measure resistance, check the continuity of the power monitor output to the DAU input by measuring between DAU backplane at XA2A pins A19 and A20. A reading of approximately 15.4K ohms indicates a continuity path and a good reading for the power monitor.

14. Reinstall DAU cover plate if troubleshooting is complete.

15. At the Maintenance Panel UD5A2, set the DAU Power switch to **ON**.

16. If the fault light is lit on the Transmitter PDP UD3A13, open the transmitter left bay door. At the Transmitter Control Panel UD3A1, set the MAINT/SYSTEM switch to MAINT and press the Manual Reset button to clear all faults and then press the Fault Display Reset button to clear all LEDs. When the faults are cleared, place the MAINT/SYSTEM switch to SYSTEM and close the left bay door.

17. Return system to normal operation.

6-4.8.4 M2.

1. Refer to paragraph 6-4.8.1 for equipment and tools required and perform paragraph 6-4.8.2 .

2. At the Maintenance Panel UD5A2, open the swing out panel to gain access to the rear of the panel.

**NOTE**

Use Figure FO5-20, sheets 2 and 3 to aid in troubleshooting.
Redundant sites, use Figure FO5-21, sheets 2 through 4.

3. At the rear of the Maintenance Panel UD5A2, locate R1, ANT Power Meter Adjustment potentiometer. With the multimeter set to measure DC volts, measure between the following points and record the voltage level:

   a. Pin 1 and GND: _____ Should be +15 Vdc.

   b. Pin 3 and GND: _____ Should be -15 Vdc.

   c. Pin 2 and GND: _____ ANT Power Head Adjust (variable)

4. While measuring the DC voltage between UD5A2R1 pin 2 and ground, adjust R1 slowly and observe measured voltage.

   a. If voltage does not change, UD5A2R1 is faulty.

   b. If voltage does change, reset voltage to reading obtained in 3.c. and proceed to step 5.

5. At the rear of the Receiver Cabinet UD4, open the door and locate the DAU.

6. Remove the six screws securing DAU cover plate using a Phillips screwdriver. Set the DAU cover plate and screws aside.

**NOTE**

The following steps are performed at the DAU as a quick check to determine if a corresponding adjustment of R1, ANT Power Head Adjust, results in a corresponding change in ANT Power Monitor

Output voltage at the input to the DAU. If a voltage change is observed, then it can be reasonably assumed that the path from R1 to the Antenna Power Monitor UD2A5 (or UD2A9 for Redundant Sites) and back to the DAU (through cables, slip rings, and power monitor) is functioning properly. If no voltage change is observed, then the path must be investigated further in the radome.

7. At the far right side of the DAU backplane, locate connector XA2A (top set of pins). Using the multimeter set on DC millivolts range, measure the ANT Power Monitor Output voltage between pins A17 and A18 and record below.

   ANT Power Monitor Output voltage _____

8. While measuring the DC voltage between pins A17 and A18, adjust UD5A2R1 slowly and observe measured voltage.

   a. If voltage does not change, proceed to step 9.

   b. If voltage does change, the DAU Analog Card UD5A3A2 is faulty.

   c. After replacing the Analog Card UD5A3A2, if the problem still exists, set the ANT Power Monitor Output voltage equal to the XMTR Power Monitor Output voltage.

      (1) Using the multimeter set on DC millivolts range, measure the XMTR Power Monitor Output voltage between pins A20 (black lead) and A19 (red lead) and record below.

      XMTR Power Monitor Output voltage _____

      **NOTE**

      The polarity of A19 and A20 is opposite from A17 and A18.

      (2) Using the multimeter set on DC millivolts range, measure the ANT Power Monitor Output voltage between pins A17 (black lead) and A18 (red lead).

      (3) At the Maintenance Panel UD5A2, adjust UD5A2R1 for the same voltage as recorded in step 8.c.(1).

   d. Bring up the RDA applications program by entering **RDAUP<Return>** at the RDA System Console.

   e. Press the **<Shift>** and **<Port>** keys **simultaneously** to access the RDA Applications Terminal.

   f. At the RDA Applications Terminal command and parameter lines, enter **DIPD<Tab>XMT<Return>** to display the Transmitter Performance Data.

   g. If the ANT Power Meter Zero reading is close to the XMTR Power Meter Zero reading, then the analog card is good. Proceed to paragraph 6-6.27 to perform RDA Power Monitor Bias Adjustment.

h. If the ANT Power Meter Zero reading is still zero, then the replacement DAU Analog Card UD5A3A2 is defective.

**NOTE**

Steps 9 through 11 are a quick continuity check from the DAU backplane to the output of the power monitor. Refer to Figure FO5-20, sheet 3. Redundant sites, refer to Figure FO5-21, sheets 3 and 4.

9. At the Maintenance Panel UD5A2, set the DAU Power switch to **OFF**.

10. Using the multimeter set to measure resistance, check the continuity of the power monitor output to the DAU input by measuring between DAU backplane at XA2A pins A17 and A18.

    a. A reading of approximately 15.4 K ohms indicates a continuity path and a good reading for the power monitor.

    b. A very high resistance indicates a faulty power monitor or an open path from the DAU backplane to the power monitor. Proceed to step 11.

11. At the Maintenance Panel UD5A2, set the DAU Power switch to **ON**.

12. Prepare RDA to go up to pedestal.

**WARNING**

Failure to perform applicable shutdown steps in paragraph 6-6.15.3 could cause serious injury or death from antenna radiation or movement.

13. Perform steps 1, 2, 3, 5, and 6 of paragraph 6-6.15.3 to shut down antenna/pedestal.

**WARNING**

Failure to place the pedestal PWR ON/SAFE Safety Interlock Switch to the SAFE position could cause serious injury or death.

14. At the azimuth housing, ensure the PWR ON/SAFE Safety Interlock Switch is set to the SAFE position.

**NOTE**

You will be entering a confined space, non-permit required. This means the confined space does not contain any atmospheric hazards capable of causing death or serious physical harm.

15. At the azimuth housing, open the door (LPP) or remove the cover plate (FSP) to gain access to the slip ring assembly.

**NOTE**

Steps 6 through 19 are performed at the Slip Ring Assembly UD2A1A2.

16. At the slip ring assembly, remove the cover plate with the appropriate screwdriver and set it aside.

17. Using the multimeter set to measure DC volts, measure between the following slip rings and record the results:

**Single Channel Sites or Redundant Sites - Channel 1**

a. Slip ring #45 and #47:_____ Should be +15 Vdc.

b. Slip ring #46 and #47:_____ Should be -15Vdc.

c. Slip ring #48 and #47:_____ Bias/Ant Power Monitor Adjustment. Should be close to value recorded in step 3.c.

d. Slip ring #49 and #50:_____ Power Monitor Output (C) and (N). Set multimeter to read DC millivolts.

**Redundant Sites - Channel 2**

e. Slip ring #54 and #51:_____ Should be +15 Vdc.

f. Slip ring #55 and #51:_____ Should be -15Vdc.

g. Slip ring #56 and #51:_____ Bias/Ant Power Monitor Adjustment. Should be close to value recorded in step 3.c.

h. Slip ring #57 and #58:_____ Power Monitor Output (C) and (N). Set multimeter to read DC millivolts.

If the voltages are present at steps a. through c. (e. through g. for Redundant Channel 2), then all is well. If any of the voltages are missing, investigate cabling or slip rings.

If the voltage at step d. (step h. for Redundant Channel 2) is missing or erroneous, suspect faulty Antenna Power Monitor UD2A5 (or UD2A9 for Redundant sites) or faulty slip rings.

**NOTE**

The following step requires second technician to return to RDA shelter and establish communications with technician in radome.

18. While measuring between slip rings #48 and #47 (or slip rings #56 and #51 for Redundant Channel 2), have technician in RDA shelter adjust the ANT Power Head Adjustment UD5A2R1.

a. If voltage changes, all is well up to this point. Reset R1 to value measured in 17.c. (17.g. for Redundant Channel 2).

b. If voltage does not change or is absent, suspect dirty slip rings or cabling.

19. While measuring between slip rings #49 and #50 (or slip rings #57 and #58 for Redundant Channel 2), have technician in RDA shelter adjust the ANT Power Head Adjustment UD5A2R1. This will check to see if the Power Monitor UD2A5 (or UD2A9) responds with a corresponding change in Power Monitor Output.

    a. If voltage changes, the power monitor is functioning.

    b. If voltage does not change, suspect a faulty power monitor or dirty slip rings. Proceed to step 20 to isolate the power monitor.

**NOTE**

Steps 20 through 26 are performed atop the elevation housing at the Antenna Power Monitor UD2A5 (or UD2A9 for Redundant sites).

20. Place 20-foot extension ladder hooks on the elevation housing top hand rail.

**WARNING**

The technician who climbs the ladder is responsible for putting on the safety harness and hooking it to a secure position.

Failure to move the azimuth and elevation stow pins from OPERATE to STOW could cause serious injury or death.

21. Ensure the azimuth and elevation stow pins are in the STOW position.

22. Don the safety harness and climb to the top of the elevation housing to troubleshoot the Antenna Power Monitor UD2A5 (or UD2A9 for Redundant sites).

23. Remove plug P1 from Power Monitor UD2A5J2 (or plug P3 from UD2A9J2).

24. At the disconnected power monitor plug, use the multimeter to measure the DC voltages between the following pins and ground. The same voltages should be measured that were obtained in step 17.a.. through c. (or 17.e. through g. for Redundant Channel 2).

    a. Pin A and B (RTN): _____ Should be +15 Vdc.

    b. Pin K and B (RTN): _____ Should be -15 Vdc.

    c. Pin D and B (RTN): _____ ANT Power Head Adjust (variable).

**NOTE**

The following step requires the second technician to return to RDA shelter and establish communications with technician in radome.

25. While measuring the DC voltage between power monitor plug pins D and B, adjust UD5A2R1, ANT Power Head Adjustment slowly and observe measured voltage.

    a. If voltage changes, suspect faulty Antenna Power Monitor UD2A5 (or UD2A9).

    b. If voltage does not change, suspect faulty/dirty slip rings or cabling.

26. Reconnect power monitor plug P1 to UD5A5J2 (or plug P3 to UD2A9J2).

27. Descend from ladder. While descending, place the elevation and azimuth stow pins to the OPERATE position.

28. Remove ladder from elevation housing and store in secure location.

29. Perform appropriate steps (1 through 6) of paragraph 6-6.16.3 to restore antenna pedestal for normal operation. Descend to RDA shelter.

30. If the fault light is lit on the Transmitter PDP UD3A13, open the transmitter left bay door. At the Transmitter Control Panel UD3A1, set the MAINT/SYSTEM switch to MAINT and press the Manual Reset button to clear all faults and then press the Fault Display Reset button to clear all LEDs. When the faults are cleared, place the MAINT/SYSTEM switch to SYSTEM and close the left bay door.

31. Return system to normal operation.

# Section 6-5. Replacement and Setup Procedures

6-5.1 INTRODUCTION.

This section provides instructions and data for the replacement of those assemblies which require special handling or setup procedures. The procedures are organized by equipment type, such as Radar Data Acquisition Signal Processor or Small Computer System Interface devices. Table 6-12 provides an index to identify the replacement procedure that must be performed when a given assembly is to be replaced. (Refer to the Illustrated Parts Breakdown Manual, NWS EHB 6-501, for exact parts location, identification, and part number ordering data.) The great majority of WSR-88D assemblies are either standalone, plug-in, or rack-mounted modules which do not require special replacement instructions. Visual inspection and reference to cabinet layout/interconnection drawings to determine access requirements, cable connections, and fastening hardware suffice for most LRUs. There are three types of assemblies for which special procedures are required. These include certain electromechanical assemblies, printed circuit cards, and peripheral communication devices. Each of these types is defined in the following paragraphs.

**NOTE**

This section refers to the RDADP as UD5, the Receiver as UD4, the Transmitter as UD3, and the Waveguide Pressurization Unit as UD6. Unless otherwise specified, the information also applies to redundant systems UD105, UD104, UD103, and UD106.

6-5.1.1 Electromechanical Assemblies. The major electromechanical assemblies in the RDA Group which require special handling instructions are located in Transmitter UD3, Antenna Pedestal UD2, and in the SCSI chassis. Other assemblies in this category are either radome, tower, or shelter-mounted devices. The detailed installation instructions for these items are contained in the respective commercial manuals or in this section. Refer to Table 6-12 to identify the procedure paragraph reference.

6-5.1.2 Printed Circuit Cards. Many of the printed circuit cards require removal or installation of jumpers (straps) before they are installed into the WSR-88D equipment. Many cards require the proper setting of miniature built-in rotary, rocker, or dual-in-line-package (DIP) switches before they are installed. The reason for this requirement is that many of the cards are standard card assemblies which can function in several different modes or configurations. They must be configured for their specific application at the time of installation. This section provides tables for determining the proper strap/switch setting for each unique card location, and includes card layout figures for positive identification of straps/switches.

**NOTE**

All straps not defined in this section must be left in the original configuration as received from the factory/spares depot.

6-5.1.3 Universal Communication Devices. Most of the communication devices used in the WSR-88D equipment (Modems, STATMUX, Modem Eliminator) are universal RS-232 devices

capable of operating in a wide variety of applications. Special jumper/switch settings are required to define the operating modes and data transfer protocols. In some cases, such as the statmux mode, selection is accomplished via interactive pushbutton/LED displays. Instructions to accomplish the correct setup for the WSR-88D applications are referenced in the applicable replacement procedure.

6-5.1.4 Lifting with Davit Crane and Maintenance Hatch. Some items which may need to be replaced may be too heavy to hold while climbing the stairs of the steel tower. Two examples of this are the azimuth gearbox and the elevation gearbox, which are both part of the pedestal. The following procedure should be performed in preparation for using the crane to raise and lower heavy items to and from the floor at the top of the steel tower. The crane and a safety railing should be on the floor at the top of the steel tower inside the radome.

Two technicians are required for this procedure.

6-5.1.4.1 Equipment and Tools Required.

Wrench set, 1/2-inch drive socket

6-5.1.4.2 Initial Conditions/Preliminary Setup.

**WARNING**

Failure to perform applicable shutdown steps in paragraph 6-6.15.3 could cause serious injury or death from antenna radiation or antenna movement.

1. Perform steps 1, 2, 3, 5, and 6 of paragraph 6-6.15.3 to shutdown the antenna/pedestal.

**WARNING**

Failure to place the pedestal PWR ON/SAFE Safety Interlock Switch to the SAFE position could cause serious injury or death.

2. At the azimuth housing, ensure the PWR ON/SAFE Safety Interlock Switch is set to the **SAFE** position.

**WARNING**

Failure to move azimuth and elevation stow pins from OPERATE to STOW could cause serious injury or death.

3. Ensure that the azimuth and elevation stow pins are in **STOW**.

6-5.1.4.3 Procedure.

1. Remove 12 bolts and washers from the maintenance hatch using a 1/2-in drive socket wrench.

2. Remove the plugs from the radome floor, around the maintenance hatch into which the safety railings will fit and for the crane vertical post.

3. Install the safety railing, fitting the bottom of the railing posts into the radome floor.
4. Each technician should grab a handle on opposite sides of the maintenance hatch while standing outside the railing and lift the hatch to its vertical position.
5. Secure the hatch to the railing.
6. Place the davit crane vertical post into the hole in the radome floor.
7. Swing the davit crane over the maintenance hatch opening and lower the weighted hook using the hand crank. Then refer to the appropriate replacement procedure.
8. When use of the crane is completed, close the maintenance hatch. Then remove the railings, secure the hatch with the bolts, remove the crane and lay the crane and railings on the floor so they do not interfere with the antenna when operation of the radar resumes.

**NOTE**

A reference to the procedure for restoring the system to an operational state is located at the end of all removal and replacement procedures.

Table 6-12. RDA Replacement Procedure Index

| Reference Designation | Nomenclature | Replacement Paragraph | Adaptation Data Parameter[4] |
|---|---|---|---|
| UD1AT4 | 3 dB Pad | - | TR32 |
| UD1DC1 | Cross Guide Coupler | 6-5.70 | TR23<br>TR22 (-.05) |
| UD1S1 | Single Channel W/G Switch | 6-5.53.5 | TR24 (-.05) |
| UD1S1 | Redundant Channel 2 W/G Switch | 6-5.53.5 | TR24 (-.05) |
| UD1S101 | Redundant Channel 1 W/G Switch | 6-5.53.5 | TR24 (-.05) |
| UD1S2 | Redundant Channel Antenna W/G Switch | 6-5.53.5 | TR24 (-.05) |
| UD1WG6 | Spectrum Filter | 6-5.71 | TR20 (-.20) |
| UD1WGXX | Shelter Waveguide | 6-5.53 | See para. 6-5.53 |

- - - - -

1 A3 is site dependent

2 Pedestal Control Unit, Pedestal Power Amplifier/Subassemblies, and Wideband Switch are not part of UD105.

3 Narrowband communication equipment part of UD105 only.

4 Numbers in parenthesis indicates the fixed value used in adaptation data. That value should not be changed. Fixed values (particularly AØ) will be included as “default” values during certain path loss measurements where several path losses are measured in series.

Table 6-12. RDA Replacement Procedure Index (continued)

| Reference Designation | Nomenclature | Replacement Paragraph | Adaptation Data Parameter[4] |
|---|---|---|---|
| UD105A20[3] | STATMUX | 6-5.78 | N/A |
| UD105A21[3] | Dial Modem (Standalone) | 6-5.79 | N/A |
| UD105A24 | Relay Assembly | 6-5.80 | N/A |
| UD106 | Waveguide Pressurization Unit | 6-5.54 | N/A |
| UD2A1A1A1 | Elevation Manual Drive Assembly | 6-5.52.1 | N/A |
| UD2A1A1A1S1 | Elevation Manual Drive Stow Pin Switch | 6-5.52.2 | N/A |
| UD2A1A1A2/ UD2A1A1A2A1 | Elevation Data Package Assembly/ Elevation Encoder | 6-5.52.3 | N/A |
| UD2A1A1A3 | Elevation Gearbox | 6-5.52.4 | N/A |
| UD2A1A1B1 | Elevation Gearbox Drive Motor | 6-5.52.5 | N/A |
| UD2A1A1S3 and S4 (LPP) or UD2A1A1A8/A9S1 (FSP) | Elevation Stow Pin Switch | 6-5.52.6 | N/A |
| UD2A1A2 | Pedestal Slip Ring Assembly | 6-5.52.17 | N/A |
| UD2A1A2A1,A2, A3 | Pedestal Slip Ring Brush Block Assembly | 6-5.69 | N/A |
| UD2A1A3A1 | Azimuth Manual Drive Assembly | 6-5.52.7 | N/A |
| UD2A1A3A1S1 | Azimuth Manual Drive Interlock Switch | 6-5.52.8 | N/A |
| UD2A1A3A2/ UD2A1A3A2A1 | Azimuth Data Package/Azimuth Encoder | 6-5.52.9 | N/A |
| UD2A1A3A3 | Azimuth Gearbox | 6-5.52.10 | N/A |
| UD2A1A3B1 | Azimuth Gearbox Drive Motor | 6-5.52.1 1 | N/A |
| UD2A1A3FL1 | Bandpass Filter | 6-5.52.20 | R247 |
| UD2A1A3FL2 | Bandpass Filter | 6-5.52.20 | R247 |
| UD2A1A3RT2 | Main Bearing Oil Sensor | 6-5.52.15 | N/A |
| UD2A1A3S2 | Azimuth Stow Pin Switch | 6-5.52.12 | N/A |

- - - - -

1 A3 is site dependent

2 Pedestal Control Unit, Pedestal Power Amplifier/Subassemblies, and Wideband Switch are not part of UD105.

3 Narrowband communication equipment part of UD105 only.

4 Numbers in parenthesis indicates the fixed value used in adaptation data. That value should not be changed. Fixed values (particularly AØ) will be included as “default” values during certain path loss measurements where several path losses are measured in series.

Table 6-12. RDA Replacement Procedure Index (continued)

| Reference Designation | Nomenclature | Replacement Paragraph | Adaptation Data Parameter[4] |
|---|---|---|---|
| UD2A1A4 | Azimuth Rotary Joint | 6-5.52.16 | TR26 (-.05) |
| UD2A1A5 | Elevation Rotary Joint | 6-5.53 | TR28 (-.05) |
| UD2A1S1 | Waveguide Switch | 6-5.53 | See para. 6-5.53 |
| UD2A1WG05 | Circulator | 6-5.52.18 | TR34 (-.20) (-.25 Redundant) |
| UD2A1WGXX | Waveguide | 6-5.53 | See para. 6-5.53 |
| UD2A2A1 | Feedhorn | 6-5.53 | See para. 6-5.53 |
| UD2A2A1WG1 | Waveguide (EL to Feedhorn) | 6-5.53 | See para. 6-5.53 |
| UD2A2WG4 | Waveguide (AZ to Feedhorn) | 6-5.53 | See para. 6-5.53 |
| UD2A3/2A7 | Receiver Protector | 6-5.52.13 | R72, R73 |
| UD2A3A1/2A7A1 | Passive Limiter | 6-5.52.19 | Part of R73 |
| UD2A4/2A8 | Low Noise Amplifier | 6-5.52.14 | R74 |
| UD2A5/2A9 | Antenna Power Monitor | 6-5.52.22 | TR10 |
| UD2A6 | Waveguide Coupler | 6-5.53 - | TR33 (Redundant) |
| UD2AT1 | 6 dB Pad | 6-5.53 | TR33 |
| 2W900 | Coax Cable | 6-5.52.21 | R248 |
| 2W901 | Coax Cable | 6-5.52.21 | R248 |
| UD2WGXX | Elevation Waveguide | 6-5.53 | See para. 6-5.53 |
| UD4A1 | RF Frequency Generator | 6-5.6 | R34, R38, R39 |

- - - - -

1 A3 is site dependent

2 Pedestal Control Unit, Pedestal Power Amplifier/Subassemblies, and Wideband Switch are not part of UD105.

3 Narrowband communication equipment part of UD105 only.

4 Numbers in parenthesis indicates the fixed value used in adaptation data. That value should not be changed. Fixed values (particularly AØ) will be included as “default” values during certain path loss measurements where several path losses are measured in series.

Table 6-12. RDA Replacement Procedure Index (continued)

| Reference Designation | Nomenclature | Replacement Paragraph | Adaptation Data Parameter[4] |
|---|---|---|---|
| UD4A1A1 | Plug-in Frequency Unit | 6-5.38 | N/A |
| UD4A4 | Pre-Select Bandpass Filter | 6-5.7 | R81 |
| UD4A5 | Mixer/Preamplifier | 6-5.8 | R83-R87 |
| UD4A6 | Matched Bandpass Filter | 6-5.9 | R88-90 |
| UD4A7 | Coax Delay Line | 6-5.10 | R91 |
| UD4A8 | IF Attenuator Assembly | 6-5.1 1 | R92, R93 |
| UD4A9 | IF Amp/Limiter | 6-5.12 | R94, R95, R96 |
| UD4A10 | I/Q Phase Detector | 6-5.13 | R97 |
| UD4A11 | A/D Converter | 6-5.14 | R98 (-10.20) |
| UD4A12 | Multi-Output Log Amp Detector | 6-5.15 | N/A |
| UD4A13 | AGC Controller | 6-5.16 | N/A |
| UD4A14 | Guard Band IF Amp Assy | 6-5.17 | R99-R102 |
| UD4A15 and A16 | Guard Band Filter Assy | 6-5.18 | R103-R106 |
| UD4A17 and A18 | Multi-Output Log Amp Detector | 6-5.19 | N/A |
| UD4A19 | Interference Detector | 6-5.20 | N/A |
| UD4A20 | Four Way Power Divider | 6-5.21 | R50, R51, R52 |
| UD4A21 | Microwave Delay Line | 6-5.22 | R55 |
| UD4A22 | 4-Position RF Switch | 6-5.23 | R57-R62 |
| UD4A23 | RF Digital Attenuator | 6-5.24 | R63-R65, R114(Ø) -R217 |
| UD4A24 | 2-Position RF Switch | 6-5.25 | R66-R68 |
| UD4A25 | RF Noise Source | 6-5.26 | R35 |
| UD4A26 | Power Monitor | 6-5.27 | TR9 |

- - - - -

1 A3 is site dependent

2 Pedestal Control Unit, Pedestal Power Amplifier/Subassemblies, and Wideband Switch are not part of UD105.

3 Narrowband communication equipment part of UD105 only.

4 Numbers in parenthesis indicates the fixed value used in adaptation data. That value should not be changed. Fixed values (particularly AØ) will be included as “default” values during certain path loss measurements where several path losses are measured in series.

Table 6-12. RDA Replacement Procedure Index (continued)

| Reference Designation | Nomenclature | Replacement Paragraph | Adaptation Data Parameter[4] |
|---|---|---|---|
| UD4A27 | Multi-Position RF Select Switch | 6-5.28 | R107 (Ø) |
| UD4A28 | Multi-Position IF Select Switch | 6-5.29 | R108 (Ø) |
| UD4A29 | RF Detector/Log Video Amplifier | 6-5.30 | N/A |
| UD4A30 | Log Amplifier Detector | 6-5.31 | N/A |
| UD4A31 | RF/IF Test Monitor | 6-5.32 | R109 (2.70)<br>R110 (.713)<br>R111 (.713)<br>R112 (.754)<br>R113 (.700) |
| UD4A32 | Receiver Interface | 6-5.33 | N/A |
| UD4A33 | 6 dB Attenuator Pad | 6-5.34 | R49 |
| UD4A34 | 10 dB Attenuator Pad | 6-5.35 | R53 |
| UD4A36 | Fixed Attenuator | 6-5.36 | R78 |
| UD4B1 and B2 | Receiver Cabinet Blowers | 6-5.37 | N/A |
| UD4DC1 | 40 dB Directional Coupler | 6-5.39 | R54 |
| UD4DC2 | 20 dB Directional Coupler | 6-5.40 | R80 |
| UD4PS1 and PS2 | Power Supply | 6-5.55 | N/A |
| UD4PS4 thru PS9 | Power Supply | 6-5.55 | N/A |
| 4W102 | Coax Cable | - | R82 (Ø) |
| 4W103 | Coax Cable | - | R79 (Ø) |
| UD5A1 | VME Chassis | 6-5.72 | N/A |
| UD5A1A1 | VME to Concurrent I/O Board (VCI-V) | 6-5.74 | N/A |
| UD5A1A2/3[1]* | VME Wideband Module | 6-5.73 | N/A |
| UD5A1PS1 | VME Chassis Power Supply | 6-5.75 | N/A |
| UD5A2 | Maintenance Panel Assembly | 6-5.50 | N/A |
| UD5A3A1 | DAU Controller Module | 6-5.41 | N/A |

- - - - -

1 A3 is site dependent

2 Pedestal Control Unit, Pedestal Power Amplifier/Subassemblies, and Wideband Switch are not part of UD105.

3 Narrowband communication equipment part of UD105 only.

4 Numbers in parenthesis indicates the fixed value used in adaptation data. That value should not be changed. Fixed values (particularly AØ) will be included as “default” values during certain path loss measurements where several path losses are measured in series.

Table 6-12. RDA Replacement Procedure Index (continued)

| Reference Designation | Nomenclature | Replacement Paragraph | Adaptation Data Parameter[4] |
|---|---|---|---|
| UD5A3A2 | DAU Analog Processor Module | 6-5.41 | N/A |
| UD5A4 | RDA Maintenance Terminal | 6-5.68 | N/A |
| UD5A5A1 | SCSI Tape Drive | 6-5.66.4 | N/A |
| UD5A5A2 | SCSI Disk Drive | 6-5.66.5 | N/A |
| UD5A5A6 | SCSI Enclosure Assembly | 6-5.66.3 | N/A |
| UD5A5PS1 | SCSI Power Supply | 6-5.66.6 | N/A |
| UD5A6A1[2] | DCU Analog Card | 6-5.42 | N/A |
| UD5A6A2[2] | DCU Digital Card | 6-5.43 | N/A |
| UD5A6PS1/PS2/ PS3[2] | DCU +5V and ±15V Power Supply | 6-5.44 | N/A |
| UD5A7[2] | Pedestal/Power Amplifier Unit | 6-5.45 | N/A |
| UD5A7A1 and A2[2] | Azimuth/Elevation Power Amp | 6-5.46 | N/A |
| UD5A7A3[2] | HV Bus Monitor | 6-5.47 | N/A |
| UD5A7CR5 and CR6[2] | Transient Absorber | 6-5.48 | N/A |
| UD5A7K1[2] | Relay | 6-5.49 | N/A |
| UD5A8 | SCSI Fan Assembly | 6-5.65 | N/A |
| UD5A9A1 thru A19 | Programmed Signal Processor Circuit Cards | 6-5.4.1 | N/A |
| UD5A10A1 thru A8 | Hardwired Signal Processor Circuit Cards | 6-5.4.1 | N/A |
| UD5A11 | Signal Processor Blower Assembly | 6-5.62 | N/A |
| UD5A12A4 thru A20 | RDA Status and Control Processor Circuit Cards | 6-5.5.4 | N/A |
| UD5A12A20A1BT1 and BT2 | TODY Battery | 6-5.5.5 | N/A |
| UD5A12A3 | Temperature Sense Module | 6-5.60 | N/A |

- - - - -

1 A3 is site dependent

2 Pedestal Control Unit, Pedestal Power Amplifier/Subassemblies, and Wideband Switch are not part of UD105.

3 Narrowband communication equipment part of UD105 only.

4 Numbers in parenthesis indicates the fixed value used in adaptation data. That value should not be changed. Fixed values (particularly AØ) will be included as “default” values during certain path loss measurements where several path losses are measured in series.

Table 6-12. RDA Replacement Procedure Index (continued)

| Reference Designation | Nomenclature | Replacement Paragraph | Adaptation Data Parameter[4] |
|---|---|---|---|
| UD5A13 | AC Fan Tray Assembly/ Fans B1 through B4 | 6-5.76 | N/A |
| UD5A13A1A1 | AC Fan Tray Sensor Board | 6-5.77 | N/A |
| UD5A14 | RDADP Cabinet Power Distribution Panel | 6-5.67 | N/A |
| UD5A15 | CDS Patch Panel | 6-5.61 | N/A |
| UD5A17 | A/B Switch | 6-5.63 | N/A |
| UD5A18 | Channel Service Unit (CSU) | 6-5.64 | N/A |
| UD5A19[2] | Automatic Wideband Switch | 6-5.81 | N/A |
| UD5A24 | Relay Assembly | 6-5.80 | N/A |
| UD5PS1 | +28 Vdc Power Supply | 6-5.56 | N/A |
| UD5PS2 and PS3 | ±15 Vdc and +5 Vdc Power Supplies | 6-5.57 | N/A |
| UD5PS4 | +5 Vdc Power Supply | 6-5.58 | N/A |
| UD5PS5 | Swing-Out Power Subsystem (SOPS) | 6-5.59 | N/A |
| UD5PS5A1 | AC Power Module | 6-5.59.4 | N/A |
| UD5PS5A1BT1 | SOPS AC Power Module Rechargeable Battery | 6-5.59.5 | N/A |
| UD5PS5A2 | DC Power Supply | 6-5.59.6 | N/A |
| UD5PS5A3 | CDS Master Module | 6-5.59.7 | N/A |
| UD5PS5A4 | DC Power Supply Fan Tray | 6-5.59.8 | N/A |
| UD5PS5A4B1/B2 | DC Power Supply Fan Tray Fans | 6-5.59.8 | N/A |
| UD6 | Waveguide Pressurization Unit | 6-5.54 | N/A |
| W53/153 | Coax Cables | | R69 |
| W54/154 | Coax Cables | | R77 |
| W55/155 | Coax Cables | | R69 |
| W56/156 | Coax Cables | | R77 |
| W60/160-4W1 10 | Coax Cable | - | R56 |

- - - - -

1 A3 is site dependent

2 Pedestal Control Unit, Pedestal Power Amplifier/Subassemblies, and Wideband Switch are not part of UD105.

3 Narrowband communication equipment part of UD105 only.

4 Numbers in parenthesis indicates the fixed value used in adaptation data. That value should not be changed. Fixed values (particularly AØ) will be included as “default” values during certain path loss measurements where several path losses are measured in series.

Table 6-12. RDA Replacement Procedure Index (continued)

| Reference Designation | Nomenclature | Replacement Paragraph | Adaptation Data Parameter[4] |
|---|---|---|---|
| W61/161-4W105 | Coax Cable | - | R48 |
| WGXX | Tower (UD11) Waveguide Pieces (From Waveguide Switch to Azimuth Rotary Joint) | 6-5.53 | TR25 |

- - - - -

1 A3 is site dependent

2 Pedestal Control Unit, Pedestal Power Amplifier/Subassemblies, and Wideband Switch are not part of UD105.

3 Narrowband communication equipment part of UD105 only.

4 Numbers in parenthesis indicates the fixed value used in adaptation data. That value should not be changed. Fixed values (particularly AØ) will be included as "default" values during certain path loss measurements where several path losses are measured in series.

6-5.1.5 Recording Maintenance Sessions using RDASOT. The RDASOT program has provisions to record maintenance sessions to a printer, tape, disk, or the console. The session is automatically logged to disk by default. If the selection is made to log to disk, a file named P06RECOD.LOG is created in account 0 on whatever volume is assigned to the RDA system console. This selection will destroy the data recorded up to the point of making the choice. At the conclusion of a maintenance session, the technician may print the file, copy it to tape, or rename it to save for later use. Note that if the file is to be saved, it must be renamed (using the OS/32 RENAME command), as the next maintenance session will use the same file name (P06RECOD.LOG). Refer to NWS EHB 6-510-1, paragraph 2.2.1 for additional information. To record a maintenance session, enter the following steps at the RDA system console.

At the RDA System Console:

| | | |
|---|---|---|
| 1. | **RDASOT<Return>** | Brings up RDASOT. The Main Menu will be displayed. |
| 2. | **1<Return>** | To select Record Maintenance Session. |
| 3. | ***x*<Return>** | Where *x* is: 1 for Log to Disk<br>2 for Log to tape<br>3 for Log to Printer<br>4 for Log to Console Only |

6-5.2 SPECIAL CONSIDERATIONS FOR REPLACEMENT PROCEDURES.

Whenever a component or assembly is to be replaced, the general considerations in the following paragraphs apply.

6-5.2.1 Safety. Always read the text and procedures and note the Safety Cautions provided. Do not attempt to bypass or circumvent instructions and features provided for the safety of personnel or the protection of the equipment.

6-5.2.2 Software Shutdown. A software shutdown is applicable when it is necessary to stop the application software prior to a removal and replacement procedure. When a software shutdown is necessary, it is included in the removal and replacement procedure.

6-5.2.3 Power Turn-Off. Always deenergize equipment before connecting/disconnecting or removing/installing components. Follow the appropriate equipment shutdown procedure as provided within each removal and replacement procedure.

6-5.2.4 Inspection. When a new or replacement component is to be installed in the equipment, first verify it is the correct part, then inspect for physical damage. Check part numbers against the parts list to ensure correctness. Attempted installation of an incorrect part (or into the wrong location) can cause equipment damage.

6-5.2.5 Related Procedures. The replacement of certain components will require an alignment or initialization to be done. This will be referenced in one of the last steps of a replacement procedure.

6-5.2.6 Handling of Electrostatic Sensitive Devices. All WSR-88D circuit cards are electrostatic sensitive devices (ESDs) and must be handled using the special ESD handling procedures given below. A grounded conductive mat with wrist strap, and a suitable conductive bag, are required to provide proper component protection. Use the following procedure below as applicable.

**ESD** **CAUTION** **ESD**

The ESD symbol establishes the requirement that all paragraphs/steps, figures with illustrations and diagrams identified by **ESD** must be followed as written and according to ESD device handling procedures.

6-5.2.6.1 Card Removal/Installation

1. Remove all power to equipment.
2. Put ESD wrist strap on bare wrist and connect clip lead to chassis frame.
3. Have a conductive bag ready.
4. Remove the component and place into the conductive bag.
5. Remove new card from its conductive package and install.
6. Disconnect wrist strap and return system to normal operation.

6-5.2.6.2 ESD DIP Switch Setting

1. Put ESD wrist strap on bare wrist and connect clip lead to chassis frame.

2. Place ESD circuit card on grounded conductive mat.
3. Set DIP switches for correct setting.
4. Install circuit card in proper slot.
5. Remove wrist strap.
6. Disconnect wrist strap clip lead from chassis frame.

### 6-5.3 RDA GROUP STARTUP AND SHUTDOWN PROCEDURES.

This section contains the RDA Group Startup procedure and the RDA Group Shutdown procedure. The entire shutdown and startup procedures should be used when the RDA group is to be shut down for an extended period of time (more than 24 hours) or to restore the RDA group to an operational state after an extended shutdown period. Portions of the procedures are referenced from LRU replacement procedures, equipment alignment procedures, or periodic maintenance procedures in other sections of Chapter 6. Table 6-22 RDA Group Circuit Breaker Identification contains a listing of circuit breakers and their location to aid in their identification for startup, shutdown, troubleshooting, and maintenance.

**WARNING**

Lethal voltages (from commercial power, cathode ray tube (CRT) high-voltage power supplies, low-voltage high-current power supplies, and RF radiation) exist in many RDA group equipments. In addition, the antenna/pedestal contains a high torque, large-mass, motor-driven system. Observe appropriate safety precautions at all times to ensure personnel safety. The safety summary at the beginning of this document should be reviewed before attempting maintenance.

**NOTE**

This section refers to the RDADP as UD5, the Receiver as UD4, the Transmitter as UD3, and the Waveguide Pressurization Unit as UD6. Unless otherwise specified, the information also applies to redundant systems UD105, UD104, UD103, and UD106.

#### 6-5.3.1 RDA GROUP SHUTDOWN.

Table 6-13 contains the procedures for the RDA Group Shutdown for single channel systems, NWS redundant systems, and FAA redundant systems. Each individual replacement procedure will refer to the specific steps in this table as required. The following special considerations apply whenever the RDA equipment is to be deenergized:

- Do not deenergize consoles, terminals, or primary equipment unless the associated programs have been placed off-line (stopped) and all active files are properly closed

(tasks ended). This is accomplished by "marking off" the disks, following the steps provided in the shutdown procedures.

- Be sure to advise the equipment operator of any planned equipment shutdown so that necessary operating mode change/task completions may be accomplished.
- Prior to visiting an equipment shelter, local control must be established from the MSCF. This is accomplished at the MSCF HCI, RPG Control/Status window. Click on the **Control** box in the RDA container. After the RDA Control/Status window appears, click on **Enable Local (RDA)**.
- After switching any A/B switch, wait for the computer to repaint the screen before typing. If any keyboard locks, shut off the 0/1 power switch on the front lower right corner of the terminal and wait a full 20 seconds before restoring power. This will clear the problem.

6-5.3.2 RDA GROUP STARTUP.

Table 6-15 contains the procedures for the RDA Group Startup for single channel systems, NWS redundant systems, and FAA redundant systems. Each individual replacement procedure will refer to the specific steps in this table as required. Refer to the special considerations and notes in paragraph 6-5.3.2.1 before proceeding with the RDA Group Startup procedure in the previously mentioned table.

6-5.3.2.1 Special Considerations and Notes. The WSR-88D unit is a fully-integrated, self-monitoring system with extensive status monitoring and fault detection instrumentation. In addition, many status indications are dependent on either software controlled functions, operator selected submodes, or equipment operational states. This can be a source of confusion during startup and maintenance activities. It is recommended that the technician ascertain system status and operator enabled/inhibited states prior to commencing any maintenance or startup activity. The areas where confusion is most likely to occur are summarized in paragraphs 6-5.3.2.1.1 through 6-5.3.2.1.6 .

6-5.3.2.1.1 Switching of Redundant Systems. For both the FAA and NWS redundant systems, if there is a failure in the controlling channel, attempt to transfer control to the other channel. Troubleshooting procedures, power down procedures (for replacement of parts), and off-line diagnostics can be performed on the non-controlling channel. If maintenance is to be performed on the channel that is already the non-controlling channel, then transferring control to the other channel should not be performed. This sequence of actions reduces the system down time as seen by the users. The transfer of control for the FAA and NWS systems is detailed in the paragraphs below.

In most situations, transferring control between channels is a manual operation by use of the CONC or NONC commands and password (default password is PINKY). There is an exception. If channel 2 is the controlling channel and the wideband link and the interprocessor link both fail, then the system will automatically give control to channel 1 for both NWS and FAA redundant configurations.

6-5.3.2.1.1.1 Switching of FAA Redundant Systems. Transfer to the other channel can be performed at the Distant MSCF for FAA redundant systems using the procedures in Table 4-46. If

transfer of control to the other channel fails at the MSCF, then it should be performed at the RDA maintenance terminal in the equipment shelter using the procedure in Table 4-48.

6-5.3.2.1.1.2 Switching of NWS Redundant Systems. Transfer to the other channel can be performed at the remote RDA maintenance terminal for NWS redundant systems using Table 4-50. RDA local control must be enabled from the MSCF workstation before performing transfers on the remote RDA maintenance terminal and before performing transfer functions with the RDA maintenance terminals at the RDA site. If transfer of control to the other channel fails at the remote RDA maintenance terminal, then transfer of control to the other channel should be performed at the RDA maintenance terminal in the RDA equipment shelter using the procedures in Table 4-52.

Before transferring control from one channel to another, both channels should be in Standby (STBY). The channel which is taking control can be in either LOCAL or L/R. The channel from which control is being taken must be in L/R. Putting a channel in L/R can be accomplished by performing an enable remote control (ENRC) command while the channel is in STBY. If an ENRC command is attempted while the channel is in OPER, the channel will go to REM OPER and control of the channel from the remote RDA maintenance terminal or RDA maintenance terminal will be lost until the RPG enables local control again.

Control can be given from channel #1 to channel #2 by use of the NONC command and password on the command and parameters lines of channel #2. The NONC command can only be used on channel #2, with channel #2 in LOCAL or L/R. If the NONC command is used on channel #1 in an attempt to give control to channel #2, you will get the response `NONC rejected Channel is Channel1` , because the NONC command merely states go to the default channel or make channel #1 the controlling channel, which it already is. The CONC command can be used on either channel to assume the controlling channel mode, provided that the current controlling channel is in either LOCAL or L/R.

6-5.3.2.1.2 Data Links. Both wideband and narrowband communications equipment indicate faults and/or disconnect conditions whenever equipment at either end of the link is deenergized or inoperative. In addition, connection and data transfer will usually be disabled if the controlling program in the associated processor is not initialized (running).

6-5.3.2.1.3 RDA Control. The RDA is controlled either locally or remotely. Remote control by the Unit Control Position (System Mode) is the normal method of RDA control. When the RDA is under remote control, the RDASC processor and RPG data processor (RPGDP) are both operational with the application software running and the processors are communicating with each other. When the RDA is under local control (Maintenance Mode), the RDASC processor is operating under the control of either the RDA application program or the RDASOT program. With the RDA in local control, communication between the RDASC processor and the RPG data processor has been suspended.

6-5.3.2.1.4 System/Applications Consoles. All system terminals are in direct communication with their respective processors via the system MUX bus structure. Deenergizing any console while the applications programs are on-line may result in a communication lockup to the MUX bus or a loss/contamination of programs or product data in memory. Do not deenergize any terminal unless the tasks in the associated applications software have been properly terminated.

6-5.3.2.1.5 Transmitter Startup. The following special considerations apply to transmitter maintenance startup:

6-5.3.2.1.5.1 When preparing to perform the transmitter startup procedure, visually inspect the transmitter top control panel to ensure that all circuit breakers on the Transmitter AC Power Distribution Panel UD3A13 are in the OFF position. Ensure that all tools are removed from inside the cabinet/bays and that both inner doors are closed and key interlocked.

**CAUTION**

Ensure that all personnel are clear of radar transmitter cabinets and the radome before energizing the transmitter.

6-5.3.2.1.5.2 Transmitter startup requires the availability of the RDASC processor under control of either the application or RDASOT program in order to obtain triggers and synchronization from the Hardwired Signal Processor.

6-5.3.2.1.5.3 The FILAMENT FAULT indicator may light during initial startup, but must go off within 60 seconds after the filament current reaches the nominal value on the nameplate.

**NOTE**

A manual reset is required to clear the fault display.

6-5.3.2.1.5.4 In the Maintenance Mode, all fault indications on the fault monitor panel must be reset manually. To reset a fault indication, perform the following on the Transmitter Control Panel:

1. Press the RESET MODE AUTOMATIC/MANUAL pushbutton and verify that the MANUAL indicator illuminates.
2. Press the FAULT DISPLAY RESET pushbutton and verify that the FAULT indicators go off.
3. Press the RESET MODE MANUAL pushbutton and verify that the AVAILABLE indicator illuminates.

6-5.3.2.1.5.5 In the system (remote) mode, the Reset Mode function defaults to Automatic. This allows fault circuitry to be automatically recycled.

6-5.3.2.1.5.6 When the transmitter is in the system (remote) operating mode and a fault condition persists after five automatic resets have been attempted, the transmitter will become non-operational and the fault must be reset manually.

6-5.3.2.1.5.7 The FAULT DISPLAY RESET pushbutton resets all fault indicators to the OFF condition.

6-5.3.2.1.5.8 Several transmitter operating parameters are dependent upon the characteristics of the specific klystron tube installed. The correct filament current must always be ascertained by inspecting the klystron nameplate tag. Other voltage/current dependencies are noted in the applicable turn-on inspection or adjustment step.

6-5.3.2.1.6 RDADP Startup.

6-5.3.2.1.6.1 The wideband transceiver will present data link fault indications during turn-on until the communications equipment at both ends of the link are operational and under applications software control. If faults persist or communications cannot be established after startup is complete, refer to the wideband fault isolation flow charts in NWS EHB 6-545.

6-5.3.2.1.6.2 The RDA Group Startup procedure assumes all required operational program software is loaded on the SCSI disk mass storage device and available for automatic or manual booting into processor memory. If an operational software program load/reload is required, refer to paragraph 4-3.4 .

6-5.3.2.1.6.3 If the Antenna Pedestal UD2 is positioned at either the upper or lower elevation limits, the RDA applications program will fail to initialize and a `SELF TEST 2 FAILURE` message will be presented at the RDA System Console. If this condition occurs during startup, the antenna will have to be moved out of the stops before successful initialization can be performed. To prevent this occurrence, always be sure to properly terminate the RDA applications program before deenergizing the equipment (Table 6-13, steps 1 through 5).

6-5.3.2.1.6.4 Any time that power to the NWS Channel 1 RDASC Processor UD105A12, STATMUX UD105A20/UD32A3, or Standalone Dial Modem UD105A21/UD32A4 is temporarily lost, the Standalone Dial Modem UD32A4 must redial the Standalone Dial Modem UD105A21 to reestablish communication with the equipment in the NWS redundant shelter.

6-5.3.2.1.6.5 When maintenance is complete and it's time to leave an NWS redundant shelter, ensure that both RDA (Local/Remote) Dual A/B Switches UD5/105A17 are in the B (remote) position. When maintenance is complete, and it's time to leave an FAA redundant shelter, or a shelter which contains a Collocated RPG, ensure that both A/B Switches UD5/105A17 are in the B (remote) position.

## 6-5.4 SIGNAL PROCESSOR UD5A9/A10 CIRCUIT CARD REPLACEMENT.

The RDA signal processor consists of the Hardwired Signal Processor (HSP) UD5A10 and the Programmable Signal Processor (PSP) UD5A9 assemblies. Each of these assemblies is a universal type card rack featuring a wired backplane assembly and standard size (100 or 150 pin) card slot connectors.

6-5.4.1 Signal Processor Circuit Card (UD5A9A1 thru A19 and UD5A10A1 thru A8) Removal and Insertion. The Programmable Signal Processor/Hardwired Signal Processor (PSP/HSP) circuit cards are 6″×9″ cards mounted vertically in 11-slot (HSP) or 23-slot (PSP) card racks. (Refer to

Figure 6-11 for the PSP/HSP card layout scheme.) To prevent damage, a special card extractor tool is used to remove the cards from the backplane assembly (Refer to Figure 6-12.) The pins on the card extractor are engaged to the outside edge of the card to be removed. By squeezing the handle of the card extractor, the brace of the card extractor will push onto the card rack. As pressure on the handle is increased, the card will slide from the connectors. When removing a card, do not pull card extractor brace off the card rack until the card is completely disengaged. When the card is fully disengaged, remove the card extractor from the card, then remove the card from the slot by holding the card edges securely with both hands. To reinstall, guide card gently to rear of slot and, using thumb pressure at each corner, rock the card into the backplane until it is fully seated. Refer to paragraph 6-5.4.3 for replacement procedures. Also, remember to wear the grounded ESD wrist strap while handling circuit cards.

Table 6-13. RDA Group Shutdown Procedure

| Step | Equipment/Location | Action/Procedure | Indication/Response |
|---|---|---|---|
| | | **NOTES**<br><br>In the following procedure, where there are **bold face headings,** any step, note, caution, warning, etc. that is immediately after the heading applies only to the type of system indicated in the text of the heading, **i.e. NWS Redundant, FAA Redundant, or Single Channel**. Where steps, notes, cautions, warnings, etc. are not preceded by a **bold face heading** they apply to all systems.<br><br>Before traveling to the RDA equipment shelter to perform the shutdown procedure, enable local control by performing step 1.<br><br>To shut down the pedestal, refer to paragraph 6-6.15 .<br><br>**FAA and NWS Redundant Systems only**<br>Before performing shutdown on any channel, ensure control is switched from the channel to be shut down by performing the applicable procedures of Table 4-46, Switching FAA Redundant Channels Remotely from the Distant MSCF or Table 4-50, Switching NWS Redundant Channels Remotely Starting at the MSCF. If remote switching fails, then perform the applicable procedures of Table 4-48, Switching FAA Redundant Channels Locally Starting at the MSCF, or Table 4-52, Switching NWS Redundant Channels Locally Starting at the MSCF. | |
| 1. | MSCF Workstation (UD71) | Enable local control of the RDA from the MSCF Workstation by performing the following steps: | |

Table 6-13. RDA Group Shutdown Procedure (continued)

| Step | Equipment/Location | Action/Procedure | Indication/Response |
|---|---|---|---|
| 1.a. | | On the HCI (Active/ Controlling channel only for FAA Redundant systems), click the Control block in the RDA container and observe the RDA Control: field. | The RDA Control: field should indicate “RPG” assuming the RPG is in control of the RDA. |
| 1.b. | | Click Enable Local (RDA) in the RDA Control area to allow control at the RDA. | “Enable RDA control of RDA” noted on Feedback: line on HCI. |
| **NOTES**<br><br>In step 1.b. after control is enabled from the MSCF workstation, the RDA will continue to indicate `MODE REM OPER` at the RDA Maintenance Terminal until RELC (Request Local Control) is performed at that terminal (either remotely or at the RDA site) assuming the RDA is in Operate. For redundant systems, only the controlling channel could be in Operate. If the controlling channel is in STBY, the MODE will already indicate L/R.<br><br>The Equipment/Location column lists dual reference designations for the equipment. Single channel systems only have one reference designation and should refer to the reference designation with a single digit such as UD5. Single channel systems also can ignore references to controlling vs noncontrolling channels. | | | |
| 2. | Step deleted. | | |
| 3. | Step deleted. | | |

Table 6-13. RDA Group Shutdown Procedure (continued)

| Step | Equipment/Location | Action/Procedure | Indication/Response |
|---|---|---|---|
| | | **NOTES**<br><br>**FAA and NWS Redundant Systems only**:<br>The following steps generally apply only to the (non-controlling) channel upon which maintenance is to be performed. Exceptions to this will be indicated in the step to which they apply. Thus, if UD5/105A1A4 is listed in the Equipment/Location column and maintenance is to be performed on channel 1, the reference applies to UD105A1A4.<br><br>**FAA Redundant Systems only**:<br>If it becomes necessary to use the RDA Maintenance Terminal (which is not used in this procedure) press the <Break> key at the RDA Maintenance Terminal UD5/105A4 with the A/B Switch UD5/105A17 in the "A" position.<br><br>**FAA and NWS Redundant Systems**:<br>If there is a problem in the controlling channel, perform the applicable procedure to switch control to the other channel.:<br><br>Table 4-46, Switching FAA Redundant Channels Remotely from the Distant MSCF<br>Table 4-50, Switching NWS Redundant Channels Remotely Starting at MSCF<br>Table 4-48, Switching FAA Redundant Channels Locally Starting at MSCF, or<br>Table 4-52, Switching NWS Redundant Channels Locally Starting at MSCF | |
| 4. | **FAA and NWS Redundant Systems**<br>A/B Switch or Dual A/B Switch UD5/105A17 | **FAA Redundant Systems**<br>Turn the A/B Switch to the "B" (OPERATION/RDA MAINTENANCE) position.<br>**NWS Redundant Systems**<br>Turn the A/B Switch to the "A" (LOCAL) position. | |
| 5. | RDA Maintenance Terminal | Terminate the RDA application program by performing the following steps: | |

Table 6-13. RDA Group Shutdown Procedure (continued)

| Step | Equipment/Location | Action/Procedure | Indication/Response |
|---|---|---|---|
| 5.a. | | At the Main Menu of the RDA Applications Terminal, enter **RD<Return>** at the command line to display the RDA Control Menu. | RDA Control Menu is displayed. |
| 5.b. | | At the Main Menu of the RDA Applications Terminal, request local control from the MSCF workstation by entering **RELC<Return>** at the command line. | `RELC-ACCEPTED` appears on the feedback line of the menu. `LOC` appears in the MODE field. The RDA is now in local control. |
| 5.c. | | Check the STAT line. If the STAT line is not `STBY`, place the channel in standby by entering **STBY<Return>**. | STAT line reads `STBY`. |
| 5.d. | | To ensure the archive device is set to idle, enter **ARCH<Tab>D<Return>** at the command line. If archive device is not idle, reenter the above command. | `ARCH IGNORED COMMAND ENABLED OR IN PROGRESS` will appear if archive is idle. |
| 5.e. | | At the Main Menu command line, enter **TERP<Tab>**. | `TERP` is displayed on command line and cursor moves to parameter line. |
| 5.f. | | At the parameter line, enter ***password*<Return>**. The default password is *FLOYD*. | `TERP ACCEPTED` is displayed. |
| 5.g. | | Perform **<Shift><Port>** to display and move cursor to the RDA System Console.<br>RRRAT Users can use mouse and click on RDA System Console window. | `Task 02:End of Task` appears after a short delay at the RDA System Console. |

Table 6-13. RDA Group Shutdown Procedure (continued)

| Step | Equipment/Location | Action/Procedure | Indication/Response |
|---|---|---|---|
| | | **WARNING**<br>High voltage is present in the RDADP UD5 and Radar Receiver UD4 which can cause serious injury or death. Set service panel circuit breakers to **OFF** when working in the RDADP or the Radar Receiver.<br>**NOTE**<br>**Single Channel Systems Only**<br>When the procedure indicates a reference to RDA Secondary Power Distribution Panel #1 UD7A3, #2 UD7A29, or #3 UD7A30, only #1 UD7A3 is applicable to Single Channel Systems. | |
| 6. | RDA Secondary Power Distribution Panel #1 UD7A3 (Channel 1), or #2 UD7A29 (Channel 2) | Place Receiver CB22 to **OFF**. | Receiver System deenergized |
| 7. | Radar Transmitter Control Panel UD3A1 | Before shutting down the transmitter in the following steps, ensure the transmitter is in **MAINT** by pressing the MAINT/SYSTEM switch as required. | Observe that MAINT and MANUAL indicators are illuminated. |
| 8. | Transmitter Power Distribution Panel UD3A13 | Place the following transmitter circuit breakers to the **OFF** position:<br>CB3 (CABINET LIGHTS),<br>CB1 (HIGH VOLTAGE POWER),<br>CB2 (AUXILIARY POWER) | Transmitter internal electronics deenergized. Observe that indicators do not illuminate when each cabinet door is opened. |
| 9. | | Lock the CB1 HIGH VOLTAGE POWER OFF by rotating the HVCB key CLOCKWISE to LOCK and removing it. | |
| 10. | RDA Secondary Power Distribution Panel #1 UD7A3 (Channel 1), or #2 UD7A29 (Channel 2) | Place CB1, 3, and 5 (ganged) for the Transmitter and CB7 for the Transmitter Utility Power outlets to **OFF**. | Transmitter cabinet deenergized. |

Table 6-13. RDA Group Shutdown Procedure (continued)

| Step | Equipment/Location | Action/Procedure | Indication/Response |
|---|---|---|---|
| | | **CAUTION**<br>Before turning off the waveguide pressurization unit, ensure the transmitter is shut down.<br>**NOTE**<br>Shut off circuit breakers to the waveguide pressurization unit only if the site will be shut down for an extended period of time (over 24 hours) or the waveguide has maintenance required. | |
| 11. | Waveguide Pressurization Unit UD6/106 | Set the POWER ON/OFF switch (CB1) to **OFF** only if waveguide pressurization unit has maintenance required. | PWR indicator extinguishes. Compressor stops. |
| 12. | **Single Channel and FAA Redundant Systems**<br>RDA Secondary Power Distribution Panel #1 UD7A3 (Channel 1), or #2 UD7A29 (Channel 2)<br><br>**NWS Redundant Systems**<br>RDA Secondary Distribution Panel #3 UD7A30 | **Single Channel and FAA Redundant Systems**<br>Place Waveguide Pressurization Unit CB8 to **OFF** only if waveguide pressurization unit has maintenance required.<br>**NWS Redundant Systems**<br>Place Waveguide Pressurization Unit circuit breakers CB10 (for UD106) and CB8 (for UD6) to **OFF** only if waveguide pressurization unit has maintenance required. | |

Table 6-13. RDA Group Shutdown Procedure (continued)

| Step | Equipment/Location | Action/Procedure | Indication/Response |
|---|---|---|---|
| | | **WARNING**<br>Failure to set Secondary Power Distribution Panel circuit breakers to OFF when working on pedestal equipment could cause serious injury or death.<br>**NOTE**<br>Steps 13 - 15 turn off power to the pedestal making it inoperable. This is only accomplished if both channels in a redundant system or the pedestal are turned off.<br>If either of the channels is operating, it must be placed into Standby by performing step 13 prior to turning off the power to the pedestal electronics. | |
| 13. | RDA Maintenance Terminal of the operating channel | Place the operating channel in standby prior to shutting down pedestal electronics by entering **STBY<Return>** at the operating channel's RDA Applications Terminal command line. | `STBY` appears in the STAT line of the operating channel's RDA Control Menu. |
| 14. | **Single Channel Systems**<br>RDA Secondary Power Distribution Panel UD7A3<br>**FAA Redundant Systems**<br>RDA Secondary Power Distribution Panel #2 UD7A29<br>**NWS Redundant Systems**<br>RDA Secondary Power Distribution Panel #3 UD7A30 | Place antenna Pedestal Motor Power circuit breakers CB2, 4, and 6 to **OFF** if both channels or the pedestal must be shut down. | Ensure the Pedestal Power Amplifier UD5A7 lights extinguish. |
| 15. | RDA Maintenance Panel UD5A2 | Place the PEDESTAL ELECTRONICS POWER switch to the **OFF** position. (There is no Pedestal Electronics Switch on UD105A2). | Pedestal Electronics secondary power deenergizes. |
| 16. | RDA Maintenance Terminal | Shutdown the RDASC processor by performing the following steps: | |

Table 6-13. RDA Group Shutdown Procedure (continued)

| Step | Equipment/Location | Action/Procedure | Indication/Response |
|---|---|---|---|
| 16.a. | RDA Maintenance Terminal | If the RDA Applications Terminal Main Menu is displayed, then **simultaneously** press the **<Shift>** and **<Port>** keys to get to the System Console. | System prompt "*" mode should appear. If CDS> prompt appears, enter **CO<Return>** for system prompt mode. |
| 16.b. | | At the system prompt "*", enter **ERR LOG, OFF <Return>**, then enter **D TA <Return>**. | This turns the error log off and displays the task's status. If there is a task running (except for TIME), it must be canceled per the procedure in the next step. |
| 16.c. | | Cancel any running task (except TIME) by entering **CA *task name* <Return>**. | This cancels the named task. |
| 16.d. | | Enter: **MA DSCØ:,OFF<Return>** and then enter **D D<Return>** | Marks Disk Ø off. Verify that DSCØ: is off. |
| 16.e. | | **Simultaneously** press the **<Ctrl>** and **V** keys twice, then press **<Return>** twice. | CDS> prompt appears on the screen. |
| 16.f. | | Enter **KEY 1, *password* <Return>**. The default password is *RDA*. | Sets KEY 1 commands to ON. |
| 16.g. | | Enter **HA<Return>**. | Halts CPU. |
| 16.h. | | Enter **PO OFF<Return>**. | Turns off DC power supply to the processor boards. |
| 17. | RDASC Processor Swing-Out Power Supply UD5/105PS5 | Place AC Power Module ganged circuit breakers CB1-3 to **OFF** (0) position. | Turns off AC power to the processor. |

**NOTE**

**NWS and FAA Redundant Systems Only**
Setting power circuit breaker CB1 on UD5A14 to OFF shuts down power to the pedestal electronics, making both channels inoperable. Bring the operating channel to standby before setting switch to OFF by performing step 19 of this table.

Table 6-13. RDA Group Shutdown Procedure (continued)

| Step | Equipment/Location | Action/Procedure | Indication/Response |
|---|---|---|---|
| 18. | AC Power Distribution Panel UD5A14 | Place the Main AC Power Circuit Breaker CB1 to **OFF** (0) position. | |

**NOTE**

**NWS Redundant Systems Only**
Perform steps 19 and 20 on channel 2 only if maintenance is required on the pedestal or channel 2 must be completely shut down. Setting power circuit breakers CB15, 17, and 19 in the RDA Secondary Power Distribution Panel #3 UD7A30 to OFF shuts down power to the pedestal electronics, making both channels inoperable. It is advisable to bring any operating channel to standby before setting switch to OFF.

**FAA Redundant Systems Only**
Perform steps 19 and 20 on channel 2 only if maintenance is required on the pedestal or channel 2 must be completely shut down. Setting power circuit breaker CB15, 17, and 19 in RDA Secondary Power Distribution Panel #2 UD7A29 to OFF shuts down power to the pedestal electronics, making both channels inoperable. It is advisable to bring any operating channel to standby before setting switch to OFF.

**Single Channel Systems Only**
Steps 19 and 20 are only performed if the RDASC must be completely shut down. It is advisable to ensure the system is in standby before setting circuit breakers CB15, 17, and 19 in RDA Secondary Power Distribution Panel UD7A3 to OFF.

| | | | |
|---|---|---|---|
| 19. | RDA Maintenance Terminal of the operating channel | If not already accomplished, place the operating channel to standby by entering **STBY <Return>** at the command line of the RDA Applications Terminal. | STAT field in RDA Control Menu indicates `STBY` |

Table 6-13. RDA Group Shutdown Procedure (continued)

| Step | Equipment/Location | Action/Procedure | Indication/Response |
|---|---|---|---|
| 20. | **FAA Redundant Systems**<br>RDA Secondary Power Distribution Panel<br>#1 UD7A3 (Channel 1), or<br>#2 UD7A29 (Channel 2) | **FAA Redundant Systems**<br>Place RDASC Processor CB15, 17, and 19 (ganged) to the **OFF** position. | Turns off power to the RDASC Processor. |
| | **Single Channel Systems**<br>RDA Secondary Power Distribution Panel UD7A3 | **Single Channel Systems**<br>Place RDASC Processor CB15, 17, and 19 (ganged) to the **OFF** position. | |
| | **NWS Redundant Systems**<br>RDA Secondary Power Distribution Panel #3 UD7A30 | **NWS Redundant Systems**<br>Place RDASC Processor #1 (Channel 1) CB9, 11, and 13 or RDASC Processor #2 (Channel 2) CB15, 17, and 19 to the **OFF** position depending on which channel is being worked on. | |
| 21. | RDA Secondary Power Distribution Panel<br>#1 UD7A3 (Channel 1), or<br>#2 UD7A29 (Channel 2) | Place Signal Processor circuit breakers CB16 and CB18 (ganged) to **OFF**. | Turns off power to the Signal Processor. |
| | **CAUTION**<br>**NWS and FAA Redundant Systems Only**<br>28 Volts from the other redundant channel is still present at the DAU backplane with the power turned off. | | |
| 22. | RDA Maintenance Panel<br>UD5/105A2 | Place the DAU Power switch to **OFF**. | Secures power to the DAU. |
| | **NOTE**<br>Steps 23 - 25 should only be performed if the site will be shut down for an extended period of time (over 24 hours). | | |
| 23. | RDA Maintenance Terminal | Place Power ON/OFF switch to **OFF**. | Observe that the keyboard power on indicator is off. |
| 24. | RDA Secondary Power Distribution Panel #1 UD7A3 and #2 UD7A29 | If the system has a MLOS Transceiver, set corresponding circuit breakers CB24 and CB26 to **OFF**. | |

Table 6-13. RDA Group Shutdown Procedure (continued)

| Step | Equipment/Location | Action/Procedure | Indication/Response |
|---|---|---|---|
| 25. | RDA Main Power Distribution Panel UD7A2 | Set Transmitter Vents for channel #1 CB22 or channel #2 CB24 to OFF. | |

**CAUTION**

Except as required for safety while servicing the air conditioner, circuit breakers on the air conditioner should not be set to OFF. If power is removed from the air conditioner for 12 hours or more, the minimum power-up time is 4 hours or more to prevent possible damage to the compressor.

Table 6-14 and pages 6-483 through 6-490 deleted.

Table 6-15. RDA Group Startup Procedure

| Step | Equipment/Location | Action/Procedure | Indication/Response |
|---|---|---|---|
| | | **NOTE**<br><br>Perform the turn-on procedure for the channel or channels which are shutdown.<br><br>Where dual reference designations are indicated in the Equipment/Location column, perform the procedure on the applicable channel.<br><br>Refer to paragraph 6-6.16 to turn on the pedestal if it has been previously shutdown. Otherwise, proceed to step 1.<br><br>**Single Channel Systems Only**<br>When the procedure indicates a reference to RDA Secondary Distribution Panel #1 UD7A3, #2 UD7A29, or #3 UD7A30, only #1 UD7A3 is applicable to Single Channel Systems.<br><br>The Equipment/Location column lists dual reference designations for the equipment. Single channel systems only have one reference designation and should refer to the reference designation with a single digit such as UD5. Single channel systems also can ignore references to controlling vs noncontrolling channels. | |
| 1. | RDA Main Power Distribution Panel UD7A2 | Ensure that the Radar Transmitter Vent #1 and #2 circuit breakers CB22 and CB24 are **ON**. | |
| 2. | RDA Secondary Power Distribution Panel #1 UD7A3 (Channel 1), or #2 UD7A29 (Channel 2) | Ensure Radar Transmitter circuit breakers CB1, 3, 5 (ganged) are **ON**.<br><br>Ensure Radar Transmitter Utility Power circuit breaker CB7 is **ON**. | |

Table 6-15. RDA Group Startup Procedure (continued)

| Step | Equipment/Location | Action/Procedure | Indication/Response |
|---|---|---|---|
| 3. | **FAA Redundant Systems**<br>RDA Secondary Power Distribution Panel<br>#1 UD7A3 (Channel 1), or<br>#2 UD7A29 (Channel 2)<br><br>**Single Channel Systems**<br>RDA Secondary Power Distribution Panel UD7A3<br><br>**NWS Redundant Systems**<br>RDA Secondary Power Distribution Panel #3 UD7A30 | **FAA Redundant Systems**<br>Ensure CB8 for the waveguide pressurization unit is **ON**.<br><br>**Single Channel Systems**<br>Ensure CB8 for the waveguide pressurization unit is **ON**.<br><br>**NWS Redundant Systems**<br>Ensure CB10 (for UD106) or CB8 (for UD6) for the waveguide pressurization unit is **ON**. | |
| 4. | Waveguide Pressurization Unit UD6/106 | Ensure POWER ON/OFF switch (CB1) is **ON**. | PWR indicator is illuminated. Compressor runs. |
| 5. | Waveguide Pressurization Unit UD6/106 | Perform steps 5.a through 5.f if the site has been shutdown for an extended period of time (greater than 24 hours) or if waveguide pressurization faults were indicated before shutdown. | |
| 5.a. | | Observe TANK PRESSURE gauge for the correct range of operating pressure. Adjust TANK PRESSURE switch as required using the Start/Stop Pressure Switch Adjustment procedures in NWS EHB 6-512 (part # 19331) or EHB 6-512-1 (part # 41642) for the correct range of operating pressure. | For Compressor Dehydrator part number 41642, the compressor starts at 35 PSIG and stops at 60 PSIG indication on TANK PRESSURE gauge. For Compressor Dehydrator part number 19331, the compressor starts at 18 PSIG and stops at 40 PSIG. |
| 5.b. | | Measure a full compressor on/off cycle. If compressor operation is excessive, perform leak tests per the applicable commercial manual. | Verify that the compressor does not run more than 20% of the time. |

Table 6-15. RDA Group Startup Procedure (continued)

| Step | Equipment/Location | Action/Procedure | Indication/Response |
|---|---|---|---|
| 5.c. | | Observe LOW LINE PRESSURE gauge. If pressure is less than 3.0 PSIG, adjust per applicable procedure in the commercial manual. | Gage reads greater than 3.0 PSIG. |
| 5.d. | | Decrease LINE PRESSURE to 1.5 PSIG. If Line Pressure Alarm does not illuminate, adjust Line Pressure Alarm Switch per applicable commercial manual. | Line Pressure Alarm indicator illuminates at 1.5 PSIG. |
| 5.e. | | Readjust LINE PRESSURE to 3.0 PSIG. | Line Pressure Alarm deactivates. LINE PRESSURE ALARM indicator is **OFF**. |
| 5.f. | | Observe HUMIDITY ALARM indicator. If HUMIDITY ALARM indicator is not OFF, perform applicable procedures in the commercial manual to verify and correct the HUMIDITY ALARM condition. | HUMIDITY ALARM indicator is **OFF**. |
| **NOTE**<br><br>Steps 6 and 7 are performed for single channel systems or if both channels of a redundant system are shutdown. | | | |
| 6. | **FAA Redundant Systems**<br>RDA Secondary Power Distribution Panel #2 UD7A29.<br><br>**Single Channel Systems**<br>RDA Secondary Power Distribution Panel UD7A3.<br><br>**NWS Redundant Systems**<br>RDA Secondary Power Distribution Panel #3 UD7A30. | Ensure Pedestal Motor Power circuit breakers CB2, 4, and 6 (ganged) are **ON**. | |

Table 6-15. RDA Group Startup Procedure (continued)

| Step | Equipment/Location | Action/Procedure | Indication/Response |
|---|---|---|---|
| 7. | RDA Maintenance Panel UD5A2 | Place the PEDESTAL ELECTRONICS POWER switch to **ON** (there is no pedestal electronics switch on UD105A2). | |
| 8. | **FAA Redundant Systems** RDA Secondary Power Distribution Panel #1 UD7A3 or #2 UD7A29<br>**Single Channel Systems** RDA Secondary Power Distribution Panel UD7A3<br>**NWS Redundant Systems** RDA Secondary Power Distribution Panel #3 UD7A30 | **FAA Redundant Systems** Ensure RDASC Processor CB15, 17, and 19 (ganged) are **ON**.<br>**Single Channel Systems** Ensure RDASC Processor CB15, 17, and 19 (ganged) are **ON**.<br>**NWS Redundant Systems** Ensure RDASC Processor CB9, 11, and 13 (Channel 1) or CB15, 17, and 19 (Channel 2) are **ON**. | |
| 9. | RDA Maintenance Panel UD5A2/105A2 | Place the DAU Power Switch to **ON**. | **NWS Redundant Systems** No response is expected until power to the RDASC Processor is applied with the PO ON command. |
| | | **CAUTION**<br>Perform the following checks before setting circuit breakers on the Transmitter UD3:<br>Ensure the pedestal azimuth and elevation stow pins are not in the STOW position and the azimuth and elevation interlock (quick release) pins are inserted into the OPERATE hole.<br>Inspect transmitter oil level sight gauge for proper amount of oil (above ADD OIL level).<br>Ensure all tools are removed from inside cabinets and all door panels are closed, except control panel door on left.<br>Ensure all personnel are clear of transmitter cabinets. | |
| 10. | Transmitter Power Distribution Panel UD3A13 | Insert the interlock key and turn it counterclockwise to the **LOCK OFF** position. | Enables CB1 to be turned **ON**. |

Table 6-15. RDA Group Startup Procedure (continued)

| Step | Equipment/Location | Action/Procedure | Indication/Response |
|---|---|---|---|
| 11. | Transmitter Power Distribution Panel UD3A13 | Place AUX POWER (CB2) to **ON**. Place CABINET LIGHTS (CB3) to **ON**. Place HV POWER (CB1) to **ON**. | **NWS Redundant Systems** No response is expected because the power to the transmitter will not come on until the RDASC Processor is commanded to power on (PO ON). |
| 12. | RDA Secondary Power Distribution Panel #1 UD7A3 (Channel 1), or #2 UD7A29 (Channel 2) | Place Signal Processor circuit breakers CB16 and CB18 (ganged) to **ON**. | |
| 13. | RDA Secondary Power Distribution Panel #1 UD7A3 (Channel 1), or #2 UD7A29 (Channel 2) | Place Receiver circuit breaker CB22 to **ON**. | |
| 14. | AC Power Distribution Panel UD5/105A14 | Place the Main AC circuit breaker (CB1) to **ON**. | **NWS Redundant Systems** No response is expected because the power to the transmitter will not come on until the RDASC Processor is commanded to power on (PO ON). |
| 15. | RDASC Processor Swingout Power Supply UD5/105PS5 | Set AC Power Module ganged circuit breaker CB1-3 to **ON** (1) position | **NWS Redundant Systems** No response is expected because the power to the transmitter will not come on until the RDASC Processor is commanded to power on (PO ON). |
| 16. | **NWS and FAA Redundant Systems Only** RDA A/B Switch UD5A17 | **FAA Redundant Systems Only** Ensure the A/B switch is in the “B” position. **NWS Redundant Systems Only** Ensure the A/B switch is in the “A” (LOCAL) position. | |
| 17. | RDA Maintenance Terminal | Startup system and applications software and command RDASC Processor to **ON** by performing the following: | |

Table 6-15. RDA Group Startup Procedure (continued)

| Step | Equipment/Location | Action/Procedure | Indication/Response |
|---|---|---|---|
| 17.a. | RDA Maintenance Terminal | Ensure monitor power ON/OFF switch is **ON**. At system console ensure CDS prompt is present. If not, **simultaneously** press the **<Ctrl>** and **V** keys twice, then press **<Return>** twice. | CDS> prompt is present. |
| 17.b. | | Enter **KEY 1, *password* <Return>** | |
| 17.c. | | Enter **PO ON <Return>**. Wait 2 to 3 minutes for system to initialize. | RDA software will begin to boot up. The system and applications software are loaded from the hard disk. RDA Main Menu will appear after a few minutes. Pedestal motors are activated. |
| 17.d. | | Press the **<Shift>** and **<Port>** keys **simultaneously** to place the cursor on the application screen. | |
| 18. | Transmitter Control Panel UD3A1 | Observe the indications on the transmitter. | Transmitter interior cabinet lights illuminate when each cabinet door is opened.<br>The CABINET OVER TEMPERATURE and FAULT lamps are OFF. |
| 19. | Maintenance Panel UD5/105A2 | Press and hold LAMP TEST pushbutton to **ON** until the indications are observed. | All panel indicators illuminate. |
| 20. | Radar Receiver UD4 | Observe UD4 Power Supplies PS1, PS2, and PS4 through PS9 POWER ON indicators. | POWER ON indicators illuminate. |
| 21. | RDADP Cabinet UD5 | Observe Power Supply PS2 and PS3 POWER ON indicators. | POWER ON indicators illuminate. |

Table 6-15. RDA Group Startup Procedure (continued)

| Step | Equipment/Location | Action/Procedure | Indication/Response |
|---|---|---|---|
| **NOTE**<br><br>Wait for the PREHEAT light to go out and the AVAILABLE light to come on before performing step 22.<br><br>When the transmitter completes klystron preheat, the system will enter the same generating state that was in effect at the time of the prior shutdown. If the system was terminated from the operate (OPER) state, the transmitter HV indicator will illuminate upon startup; otherwise, it will not illuminate. | | | |
| 22. | Transmitter Control Panel UD3A1 | Observe AVAILABLE/PREHEAT indicator. | AVAILABLE indicator lights approximately 15 minutes after transmitter was powered on. |
| 22.a. | | Observe MAINT/SYSTEM indicator. If MAINT indicator illuminates, press MAINT/SYSTEM switch to put the transmitter in the SYSTEM mode. | SYSTEM indicator is illuminated and MAINT is off. |
| 23. | RDA Maintenance Terminal | At the Main Menu command line, enter **OPER <Return>**. | STAT line changes to `OPER`. |
| **NOTE**<br><br>Perform step 24 if the site has been shutdown for an extended period of time (greater than 24 hours.). Otherwise proceed to step 25. | | | |
| 24. | RDA Maintenance Terminal | The following steps 24.a through 24.o check RDA performance. | |
| 24.a. | | Press the **<Shift>** and **<Port>** keys **simultaneously** to place cursor on the application screen, if not already accomplished. | |
| 24.b. | | Enter **STBY<Return>** on the command line to place system in standby. | Transmitter HV OFF indicator illuminates. |

Table 6-15. RDA Group Startup Procedure (continued)

| Step | Equipment/Location | Action/Procedure | Indication/Response |
|---|---|---|---|
| 24.c. | Transmitter Control Panel UD3A1 | Press MAINT/SYSTEM switch to select maintenance mode. | MAINT indicator illuminates. |
| 24.d. | | Observe RESET MODE switch. If MANUAL indicator does not illuminate press RESET MODE switch to switch it on. | MANUAL indicator illuminated. |
| 24.e. | | Press the MANUAL RESET switch.<br>Press the FAULT DISPLAY RESET pushbutton.<br>Press Lamp Test pushbutton. | On the Power Distribution Panel, verify that the FAULT indicator is not illuminated.<br>Ensure Fault Display indicators illuminate. |
| 24.f. | | Check the Auxiliary Power Supplies by setting the Rotary Selector switch to the positions 1 through 6 and checking the VOLTAGE/CURRENT meter readings for indicated values. | Sw. Pos. / Value<br>1 +5 ± 0.50 Vdc<br>2 +15 ± 0.50 Vdc<br>3 -15 ± 0.50 Vdc<br>4 +28 ± 1.0 Vdc<br>5 +45 ± 1.5 Vdc<br>6 +280 ± 40.0 Vdc |
| 24.g. | | Press MAINT/SYSTEM switch to select SYSTEM mode. | SYSTEM indicator illuminates. |
| 24.h. | RDA Maintenance Terminal | **<Tab>** cursor to Main Menu command entry line, if necessary. | |

**NOTE**

**NWS and FAA Redundant Systems only**
The non-controlling channel cannot be brought to OPERATE, but only to STANDBY. If it is necessary to bring this channel to OPERATE perform step 24.i to switch control to that channel. Otherwise proceed to step 24.j.

Table 6-15. RDA Group Startup Procedure (continued)

| Step | Equipment/Location | Action/Procedure | Indication/Response |
|---|---|---|---|
| 24.i. | **NWS and FAA Redundant Systems Only**<br>RDA Maintenance Terminal | **NWS and FAA Redundant Systems Only**<br>If required, switch to the non-controlling channel by performing steps 24.i.1 - 24.i.4: | |
| 24.i.1 | **NWS and FAA Redundant Systems Only**<br>RDA Maintenance Terminal of the Controlling Channel | **NWS and FAA Redundant Systems Only**<br>Ensure the controlling channel's Mode is L/R as displayed on it's Application Main Menu. If the Mode is LOC, enter **ENRC<Return>** at the command line. | **NWS and FAA Redundant Systems Only**<br>The Mode of the controlling channel should now be "L/R". |
| 24.i.2 | **NWS and FAA Redundant Systems Only**<br>RDA Maintenance Terminal of the Controlling Channel | **NWS and FAA Redundant Systems Only**<br>At the Application Screen of the controlling channel, verify that the controlling channel is in standby by checking the status at the RDA Control Menu. If the status does not indicate `STBY` enter **STBY<Return>** at the command line. | **NWS and FAA Redundant Systems Only**<br>STAT line in the RDA Control Menu of the controlling channel should read `STBY`. |
| 24.i.3 | **NWS and FAA Redundant Systems Only**<br>RDA Maintenance Terminal of the Non-controlling channel | **NWS and FAA Redundant Systems Only**<br>Enter **CONC<Tab>** ***redundant password*** on the command line of the non controlling channel's maintenance terminal. The redundant default password is ***PINKY***. | **NWS and FAA Redundant Systems Only**<br>The redundant line reads "`C*`", where * is the channel #. Control has been transferred to this channel. |
| 24.i.4 | | **NWS and FAA Redundant Systems Only**<br>Verify that the new controlling channel is in Operate. If not, enter **OPER<Return>** on the command line. | **NWS and FAA Redundant Systems Only**<br>STAT line in the RDA Control menu should read `OPER`. |

Table 6-15. RDA Group Startup Procedure (continued)

| Step | Equipment/Location | Action/Procedure | Indication/Response |
|---|---|---|---|
| 24.j. | Transmitter Control Panel UD3A1 | Observe HV ON indicator illuminates. | HV ON/OFF: **HV ON** |
| 24.k. | Transmitter Control Panel UD3A1 | Verify that FOCUS COIL CURRENT meter reading is equal to preset value on nameplate under meter. If meter reading is not within tolerance, adjust current using INCREASE control under meter. | Nominal value ±5% |
| 24.l. | | Verify that FILAMENT CURRENT meter reading is equal to preset value on nameplate located under meter. If meter reading is not within tolerance, adjust filament current using INCREASE control under meter. (The FILAMENT FAULT indicator may illuminate during startup but must go off when current reaches nameplate value.) | |

Table 6-15. RDA Group Startup Procedure (continued)

| Step | Equipment/Location | Action/Procedure | Indication/Response |
|---|---|---|---|
| 24.m. | | Check transmitter power supplies by setting the rotary selector switch to positions 7 through 15 and checking VOLTAGE/CURRENT meter reading against values listed on card attached to control panel. Some voltages and currents are PRF-dependent and variations will occur as PRF changes. | Sw. Pos. / Power Supply / Tolerance<br>7 FPA Filament PS ±5%<br>8 FPA Filament Voltage ±10%<br>9 FPA Focus Coil PS ±5%<br>10 FPA Vacuum Pump PS ±5%<br>11 FPA Cathode Current ±5%<br>12 FPA Beam Voltage ±5%<br>13 Modulator Inv Current ±5%<br>14 PFN Charge Current ±5%<br>15 Regulator Current (may vary with regulation) ±5% |
| 24.n. | | Verify the correct value of VACUUM PUMP CURRENT on the meter. | Meter indicates less than 20 microamperes. |
| 24.o. | | Verify the correct value of PFN VOLTAGE on the meter. | Meter indicates a value between 4.8 and 5.2 kV. |
| 25. | RDA Maintenance Terminal | Verify status and set clock by performing the following steps: | |
| 25.a. | RDA Maintenance Terminal | If Applications Terminal is not displayed, press **<Shift>** and **<Port>** keys **simultaneously**. | Main Menu appears on the Maintenance Terminal. |
| 25.b. | | Observe the status area of the Main Menu and verify that the conditions are met for each field and that there are no alarms displayed. | Field / Condition<br>MODE LOC OPER<br>STAT OPER |
| 25.c. | | **Simultaneously** press **<Shift>** and **<Port>** keys. | "*" prompt appears on the screen. |

Table 6-15. RDA Group Startup Procedure (continued)

| Step | Equipment/Location | Action/Procedure | Indication/Response |
|---|---|---|---|
| 25.d. | | At the "*" prompt, press **<Ctrl>** and **V** keys **simultaneously** and press **<Return> <Return>**. | CDS> prompt appears on screen. |
| 25.e. | | At the CDS> prompt, enter **TI<Return>** | Day, date, and time of CDS is displayed. |
| **NOTE**<br>For step 25.f, the first set of *X*s represents the first three letters of the day (Tuesday is represented TUE). The second set of *X*s represents the month, day, and year. The last set of *X*s represents hours and minutes. | | | |
| 25.f. | | If any of the information is incorrect, at the CDS> prompt enter the following to reset all entries:<br>**TI U,*XXX,XX/XX/XXXX,XX:XX*,P<Return>**. | |
| 25.g. | | Enter **CO** and press **<Return>** twice. | "*" appears on screen. |
| 25.h. | | At the "*" prompt, enter **D T<Return>**. | Time and date of TODY clock are displayed |
| 25.i. | | If time or date needs to be changed, enter **CA TIME<Return>**. | |
| 25.j. | | To set new time and date, enter **BGLSETU<Return>**. | Displays SETTIME> prompt |
| **NOTE**<br>For step 25.k., the first set of *X*s represents the month, day, and year. The last set of *X*s represents the hours, minutes, and seconds. | | | |
| 25.k. | | At SETTIME> prompt, enter ***XX/XX/XX*, *XX:XX:ØØ* <Return>**. | The time is entered to the next minute and seconds are entered as ØØ. |
| 25.l. | | Enter **BGLSTART<Return>** to start time of day program. | |

Table 6-15. RDA Group Startup Procedure (continued)

| Step | Equipment/Location | Action/Procedure | Indication/Response |
|---|---|---|---|
| 25.m. | **NWS and FAA Redundant Systems only**<br>RDA Maintenance Terminal of the Controlling Channel | **NWS and FAA Redundant Systems only**<br>Perform steps 25.m.1 and 25.m.2 to change the mode of the controlling channel from Local to Local/Remote, if necessary. | |
| 25.m.1 | **NWS and FAA Redundant Systems only**<br>RDA Maintenance Terminal of the Controlling Channel | **NWS and FAA Redundant Systems only**<br>At the maintenance terminal of the controlling channel, press **<Shift>** and **<Port>** keys **simultaneously** to get to the applications terminal mode. | |
| 25.m.2 | **NWS and FAA Redundant Systems only**<br>RDA Maintenance Terminal of the Controlling Channel | **NWS and FAA Redundant Systems only**<br>Observe the MODE field. If the controlling channel's MODE is "LOC OPER", verify status is "STBY", then enter **ENRC<Return>** at the command line to switch the MODE to "L/R". | **NWS and FAA Redundant Systems only**<br>MODE will go to `L/R`. |
| **NOTE**<br><br>**NWS and FAA Redundant Systems Only**<br>To switch channels perform step 25.n. Otherwise proceed to step 25.o. | | | |
| 25.n. | **NWS and FAA Redundant Systems only**<br>RDA Maintenance Terminal of the Noncontrolling Channel | **NWS and FAA Redundant Systems only**<br>At the maintenance terminal of the noncontrolling channel press **<Shift>** and **<Port> simultaneously** to get to the Application Screen, if necessary. Press the **<Tab>** key to move the cursor to the command line. Type **CONC<Tab>** ***redundant password*** **<Return>**. (The redundant password is ***PINKY***.) | **NWS and FAA Redundant Systems only**<br>Observe that the REDUNDANT line reads C1 for UD105 or C2 for UD5, the STAT line reads STBY, and the MODE lines reads LOC OPER. Control has been transferred to the channel indicated. |

Table 6-15. RDA Group Startup Procedure (continued)

| Step | Equipment/Location | Action/Procedure | Indication/Response |
|---|---|---|---|
| 25.o. | RDA Maintenance Terminal of the New Controlling Channel | At the command line, type **OPER<Return>** to switch the Status from Standby to Operate. Ensure that the channel status has been changed to Operate by observing the Status line on the RDA Control Menu. | MODE line reads `LOC OPER`. STAT line reads `OPER` for the new controlling channel. |
| 25.p. | RDA Maintenance Terminal | Transfer control of RDA to MSCF Workstation by pressing the **<Tab>** cursor to the Enable Remote Control command and pressing **<Return>** or by entering **ENRC<Return>** on the command line. | `ENRC ACCEPTED` is displayed on the response line. `MODE REM/OPER` appears on the status line. |
| 26. | | Perform the following steps 26.a - 26.h prior to leaving the equipment shelter: | |
| 26.a. | **NWS Redundant Systems only**<br>RDA Dual A/B Switch UD5/105A17<br><br>**FAA Redundant Systems only**<br>RDA Dual A/B Switch UD5/105A17 | **NWS Redundant Systems only**<br>Ensure both RDA A/B switches are in the “B” position.<br>**FAA Redundant Systems only**<br>Ensure the RDA A/B switch is in the “A” (RPG) position. | |
| 26.b. | MSCF Workstation UD71 | Before leaving the shelter, call the MSCF operator and ensure control is transferred to remote operations. | `COMMAND EXECUTED-RD` is displayed. The RDA Control field in the status area of the menu appears as:<br>`RDA`<br>`CNTL`<br>`RPG` |
| **NOTE**<br><br>Steps 26.c - 26.e apply only to **NWS Redundant Systems**. | | | |

Table 6-15. RDA Group Startup Procedure (continued)

| Step | Equipment/Location | Action/Procedure | Indication/Response |
|---|---|---|---|
| 26.c. | **NWS Redundant Systems Only**<br>Remote RDA Maintenance Terminal UD32A4 | **NWS Redundant Systems Only**<br>Press the (ENTER) key for the indicated response. | **NWS Redundant Systems Only**<br>`DISCONNECTED T/D` is displayed. |
| 26.d. | **NWS Redundant Systems Only** | **NWS Redundant Systems Only**<br>Press the (ACROSS) key. | **NWS Redundant Systems Only**<br>Dial from #=1 appears. |
| 26.e. | **NWS Redundant Systems Only** | **NWS Redundant Systems Only**<br>Press the (ENTER) key. | **NWS Redundant Systems Only**<br>The modem redials the UD105A21 modem. |
| 26.f. | RDA Equipment Shelter | Ensure the security system is enabled. | |
| 26.g. | | Turn off lights in equipment shelter. | |
| 26.h. | | Exit equipment shelter and lock door. | |

PSP - UD5A9

| | |
|---|---|
| INPUT SIGNAL CONDITIONER | A1 |
| IOC DATA CONTROLLER | A2 |
| IOC DATA MEMORY | A3 |
| ACU1 BUS INTERFACE | A4 |
| ACU2 MICROSEQUENCER | A5 |
| ACU3 REGISTERED ALU | A6 |
| ACU4 MEMORY ADDRESS | A7 |
| AU4 MEMORY | A8 |
| AU INPUT MULTIPLEXER | A9 |
| AU2 MULTIPLIER/ACCUM. | A10 |
| AU3 OUTPUT SELECTOR | A11 |
| AU4 MEMORY | A12 |
| AU 2 INPUT MULTIPLEXER | A13 |
| AU2 MULTIPLIER/ACCUM. | A14 |
| AU3 OUTPUT SELECTOR | A15 |
| AU4 MEMORY | A16 |
| AU3 INPUT MULTIPLEXER | A17 |
| AU2 MULTIPLIER/ACCUM. | A18 |
| AU3 OUTPUT SELECTOR | A19 |
| (NOT USED) | A20 |
| (NOT USED) | A21 |
| (NOT USED) | A22 |
| (NOT USED) | A23 |

HSP - UD5A10

| | |
|---|---|
| CONTROL INTERFACE A MODULE | A1 |
| FILTER OUTPUT/ CLUTTER MAP | A2 |
| CONTROL INTERFACE B MODULE | A3 |
| SYNCHRONIZER MODULE | A4 |
| CONTROL INTERFACE C MODULE | A5 |
| PRESCALE MODULE | A6 |
| CLUTTER FILTER | A7 |
| CLUTTER FILTER | A8 |
| (NOT USED) | A9 |
| (NOT USED) | A10 |
| (NOT USED) | A11 |

NX2131

Figure 6-11. Signal Processor (PSP/HSP) UD5A9 and UD5A10 Layout

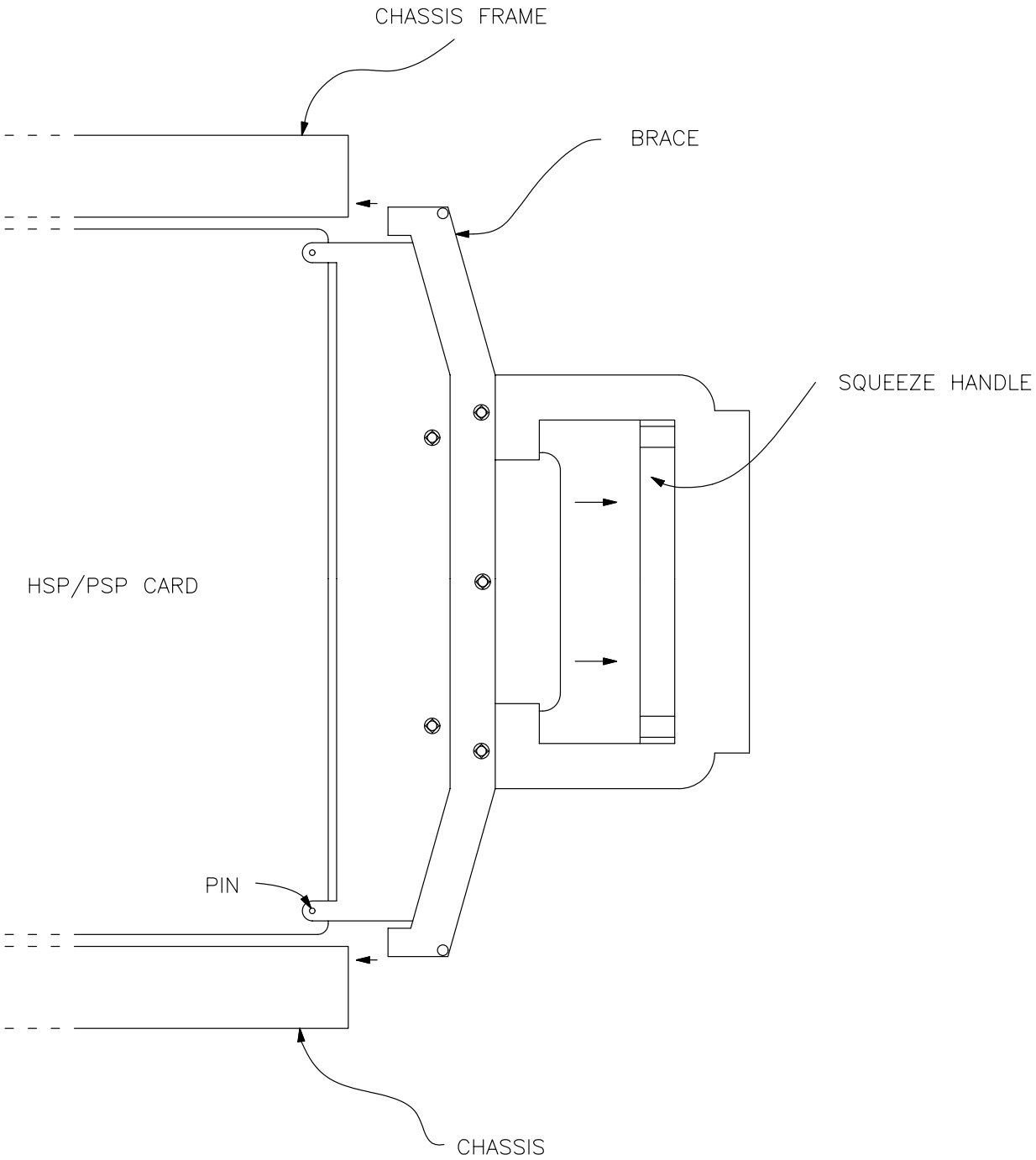


Figure 6-12. PSP/HSP Card Extractor Tool (Engaged)

6-5.4.2 Signal Processor DIP Switch Locations And Settings.

The PSP/HSP cards contain DIP switches which must be set correctly. The DIP switches for a particular card are identified by their grid location on the card. Figure 6-13 shows a typical card viewed from the top (component) side, and depicts the alphanumeric grid component locator scheme. All DIP switch assemblies will contain three, four, or eight switches of either rocker or slide style numbered from left to right, top view. The ON position (Logic Value Ø) is set when the rear-most rocker is depressed or slide is next to "ON" (indicated by X on the sample figure). In Figure 6-13, the switch at location 5F is set to "Ø1111ØØ1." Table 6-16 contains the switch settings for all of the PSP/HSP cards. Use the procedure below for the replacement of any PSP/HSP card.

**NOTE**

The EEPROM Burn procedure (paragraph 6-5.4.4 ) should have been performed on the ACU3 card UD5A9A6 at the NRC.

6-5.4.3 PSP/HSP UD5A9/A10 Card Replacement Procedure. One technician is required for this procedure.

6-5.4.3.1 Equipment and Tools Required.

1. PSP/HSP Card Extractor, Unisys Model PL7172731
2. ESD wrist strap with clip lead

6-5.4.3.2 Initial Conditions/Preliminary Setup.

**WARNING**

Failure to perform applicable shutdown steps in Table 6-13 could cause serious injury or death.

**NOTE**

Refer to paragraph 6-5.2 for special considerations for replacement procedures.

1. Open the front right UD5 cabinet door and locate the PSP/HSP.
2. Perform steps 1 through 5 and 21 of Table 6-13 to shut down PSP/HSP.

6-5.4.3.3 Replacement Procedure.

**ESD** **CAUTION** **ESD**

All WSR-88D printed circuit cards are electrostatic sensitive devices which require special handling. Refer to paragraph 6-5.2.6 .

1. Put ESD wrist strap on and attach clip lead to cabinet chassis.

2. At the RDADP, open the front cover of the PSP/HSP and remove the faulty card from its slot using the PSP/HSP card extraction tool.

3. Remove new card from its conductive wrapping and verify part number.

4. Check/set DIP switches on new card according to data in Table 6-16. (Refer to Figure 6-13 for switch location.)

5. Install new card in the correct slot (component side to left); be sure card is firmly seated.

6. Close front cover(s) and remove wrist strap.

7. At the RDA Secondary PDP #1 or #2, UD7A3 or UD7A29, set the Signal Processor circuit breakers CB16 and CB18 to **ON**.

8. Perform EEPROM download burn procedure in paragraph 6-5.4.4 if ACU3 card UD5A9A6 has been replaced. (DEPOT LEVEL MAINTENANCE ONLY)

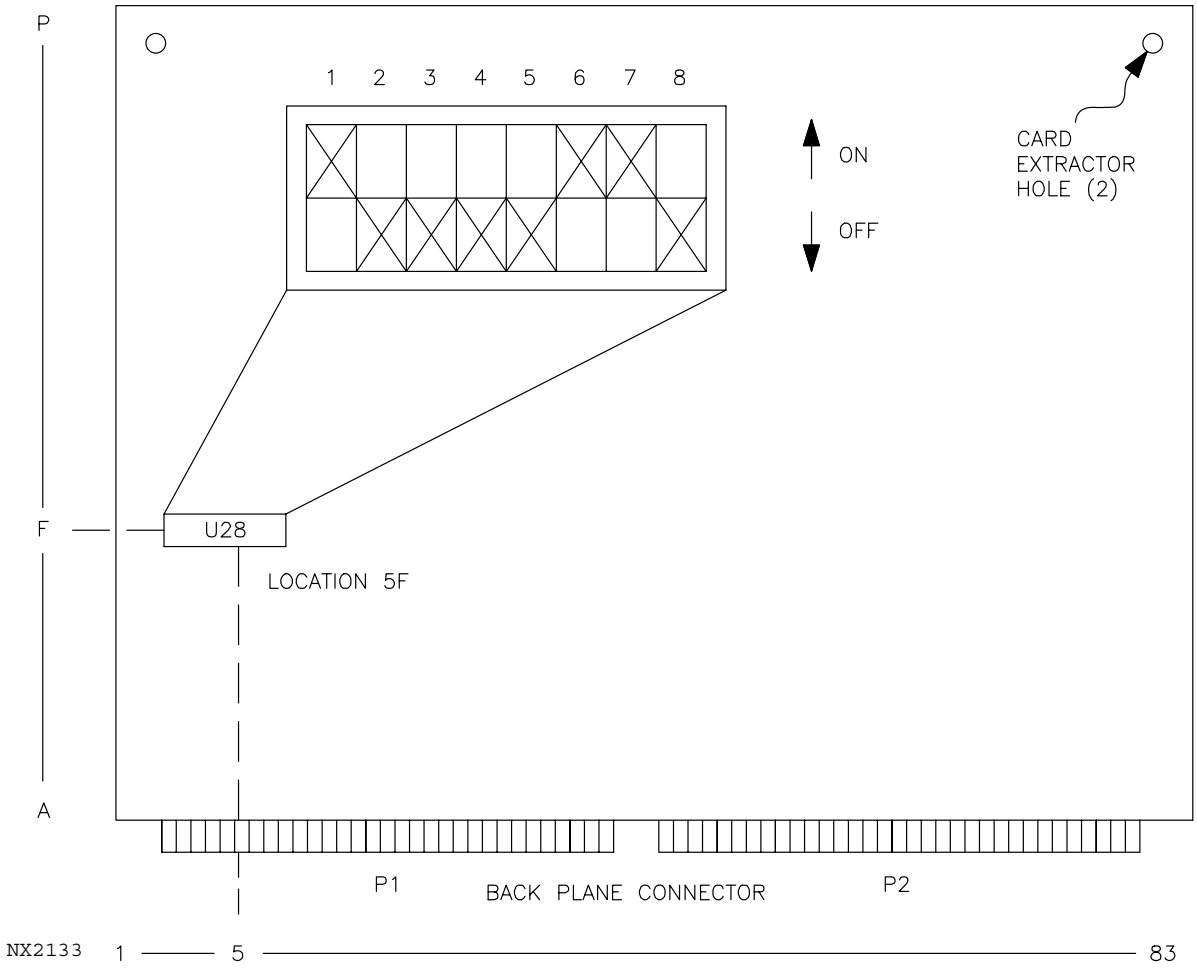


Figure 6-13. PSP/HSP Sample LRU Layout Scheme (Top View)

Table 6-16. Signal Processor DIP Switch Settings

| PC Board | Name | | Switch Location (Chip No.) | Setting (Ø = On 1 = Off) 1 | 2 | 3 | 4 | 5 | 6 | 7 | 8 |
|---|---|---|---|---|---|---|---|---|---|---|---|
| HSP UD5A10 | | | | | | | | | | | |
| A1-A3, A6-A8 | (No Straps/Switches) | | | | | | | | | | |
| A4 | Synchronizer | (note 1) | 2D (U22) | | | | | | | | |
| | | (note 1) | 2F (U40) | | | | | | | | |
| A5 | Control Interface C | (note 2) | 74H (U51) | 1 | 1 | Ø | 1 | 1 | Ø | Ø | Ø |
| | | (note 2) | 74J (U59) | Ø | 1 | 1 | 1 | 1 | 1 | 1 | Ø |
| PSP UD5A9 | (A4,A7,A9,A10,A13,A14, A17,A18: No Straps) | | | | | | | | | | |
| A1 | Input Signal Conditioner | | 5F (U40) | Ø | 1 | Ø | 1 | 1 | 1 | 1 | 1 |
| | | | 5L (U76) | 1 | 1 | Ø | Ø | | | | |
| | | | 5N (U94) | Ø | Ø | 1 | 1 | | | | |
| A2 | IOC Data Controller | | 35C (U22) | 1 | 1 | 1 | 1 | | | | |
| A3 | IOC Output Memory | | 5E (U41) | Ø | 1 | 1 | Ø | 1 | Ø | 1 | Ø |
| | | | 65P (U96) | Ø | 1 | 1 | | | | | |
| A5 | ACU2 - Microsequencer | | 5J (U55) | Ø | Ø | Ø | Ø | Ø | Ø | Ø | 1 |
| A6 | ACU3 - Registered ALU (see paragraph 6-5.4.4 ) | | 5F (U28) | Ø | 1 | 1 | 1 | 1 | Ø | Ø | 1 |
| A8,A12, A16 | AU4 - Au Memory | (note 3) | 5A (U1) | 1 | 1 | 1 | 1 | | | | |
| | | | 5P (U91) | 1 | 1 | 1 | 1 | 1 | 1 | Ø | 1 |
| | | | 15P (U92) | Ø | 1 | 1 | 1 | 1 | 1 | 1 | 1 |
| | | | 40P (U93) | Ø | 1 | 1 | 1 | 1 | 1 | 1 | 1 |
| A11 | AU3 - Au Output Selector | | 15P (U11) | 1 | Ø | Ø | 1 | Ø | Ø | 1 | 1 |
| A15 | AU3 - Au Output Selector | | 15P (U11) | Ø | Ø | 1 | Ø | Ø | 1 | 1 | Ø |
| A19 | AU3 - Au Output Selector | | 15P (U11) | Ø | Ø | 1 | 1 | Ø | 1 | Ø | 1 |

**NOTES**

1. Final positions are determined by RF Bracketing Adjustments (part of Klystron tuning). Refer to NWS EHB 6-511, para. 7.8.6.5.3.
2. Positions shown are preliminary, final settings are determined at installation. Perform AGC Clock Alignment per paragraph 6-6.24.7 using DIP switches U51 and U59. If site specific settings are unknown, use settings given above.
3. PSP Cards A8, A12, and A16 are identical, and have identical settings. PSP Cards A11, A15, and A19 are identical, but have different settings.

6-5.4.4 UD5A9A6 ACU3 Card EEPROM Burn Procedure. **This procedure is for DEPOT LEVEL MAINTENANCE ONLY.** This off-line procedure is used to download, or burn, the PSP microcode from a separately supplied EEPROM Burn Tape into the PSP ACU3 card. It must be performed whenever the ACU3 card resident microcode is to be updated. The EEPROM burn procedure is not necessary if the ACU3 card has simply been removed and inserted into the A6 slot. If an unprogrammed ACU3 card has been installed, a PSP I/O error will result. Return unprogrammed ACU3 cards to the depot.

6-5.4.4.1 Equipment and Tools Required.

EEPROM SCSI Tape (burn tape)

6-5.4.4.2 Initial Conditions/Preliminary Setup.

Refer to Table 6-13 steps 1, 2, 3, 5, and 16.a for procedures in accomplishing the following:

1. RDA in Local Control
2. Application Program Terminated
3. Maintenance Terminal on-line in System Console Mode.

6-5.4.4.3 Replacement Procedure.

1. Perform EEPROM Microcode Installation Procedure, refer to Table 6-17, steps 1 through 10.
2. Remove Burn Tape from SCSI tape drive.
3. Initialize RDA Applications Program (Refer to Table 6-15, steps 17, 25.m, 25.n, 25.o and 25.p) and establish remote (RPG) control mode.

Table 6-17. EEPROM Microcode Installation Procedure

| Step | Equipment/Location | Action/Procedure | Indication/Response |
|---|---|---|---|
| 1. | SCSI Cartridge Tape Drive | Place the burn tape in the tape drive and secure. | N/A |
| 2. | System Console | Enter **REW STØ:<Return>** | Observe: "*" on the next line |
| 3. | System Console | Enter **LO BACKUP<Return>** | Observe: `TSKID = BACKUP *` |
| 4. | System Console | Enter **ST<Return>** | Observe: `*hh:mm:ss BACKUP: Concurrent Computer Corp OS/32 BACKUP 03-153 R08-02.1 *hh:mm:ss BACKUP: Missing START commands - using console as command entry *BACKUP>` |

Table 6-17. EEPROM Microcode Installation Procedure (continued)

| Step | Equipment/Location | Action/Procedure | Indication/Response |
|---|---|---|---|
| 5. | System Console | Enter **IN=STØ:,OUT=DSCØ:, LI=NULL:, VER,ACC=Ø<Return>** | Observe: "*BACKUP>" |
| 6. | System Console | Enter **END<Return>** | Observe: `*hh:mm:ss BACKUP: 9 FILES TRANSFERRED *hh:mm:ss BACKUP: Option Verify *hh:mm:ss BACKUP: END OF TASK 0` |
| 7. | PSP UD5A9 | Insert a jumper wire between test points 1 and 2 on the ACU3 card in location A6 (See Figure 6-14 for test point location.) | N/A |
| 8. | System Console | Enter **PROMBURN/*sss sss* <Return>** where sss = account number. NOTE: Burn process takes about 20 minutes. | Observe: NOTE: see Figure 6-15 for results of this step "*". |
| 9. | System Console | Enter **DEL PROMBURN.CSS/*sss* <Return>** where sss = account number | Observe: "*" |
| 10. | PSP UD5A9 | Remove jumper wire | N/A<br>Installation complete. RDA may now be restored to operational status. |

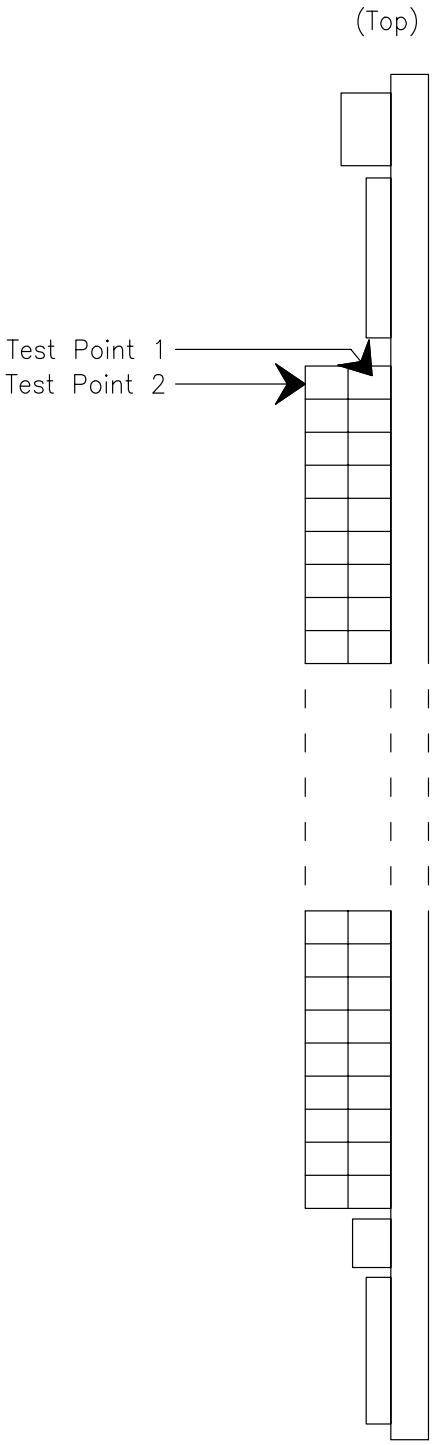


NOTE: Card Location A6 in PSP Chassis

NX2134

Figure 6-14. Test Point Jumper Locations, ACU3 Card UD5A9A6

```
*13:21:38   .BG:START/END CONTROL STORE ADDRESS: 0/              748#
*13:21:39   .BG:
*13:21:39   .BG:
*13:21:40   .BG:          TOTAL MICROCODE BLOCKS:  1
*13:21:40   .BG:
*13:21:40   .BG:          CONFIGURATION BLOCK:  1
*13:21:40   .BG:
*13:21:40   .BG:          BURN FILE:  SYS  :CSHIP    .TRN/P
*13:21:40   .BG:          FILE SIZE:  31 RECORDS
*13:21:40   .BG:          START CONTROL STORE ADDRESS:  0
*13:21:40   .BG:          END CONTROL STORE ADDRESS:  748#
*13:21:41   .BG:          BURN DATE/TIME                 04/06/89    08:54:49
*13:21:41   .BG:          BURN FILE CREATED              04/03/89    16:44:00
*13:21:41   .BG:          BURN FILE LAST WRITTEN:        04/03/89    23:36:00
*13:21:41   .BG:
*13:21:41   .BG:--- READING PROM BEFORE MICROCODE BLOCK
*13:21:41   .BG:    ADDRESS - START/END:                 FFFFFFFF/   FFFFFFFE
*13:21:41   .BG:--- WRITING  MICROCODE  BLOCK
*13:21:42   .BG:    ADDRESS - START/END:                 FFFFFFFF/   748E#
*13:22:40   .BG:--- READING FROM AFTER MICROCODE BLOCK
*13:22:50   .BG:    ADDRESS - START/END:                 748F/  #    FF8E
*13:22:55   .BG:---  WRITING  CONFIGURATION BLOCK
*13:23:40   .BG:    ADDRESS - START/END:                 FF8F/       FFDE
*13:24:45   .BG:--- READING  AFTER  CONFIGURATION BLOCK
*13:25:50   .BG:    ADDRESS - START/END:                 FFDF/       FFFA
*13:27:58   .BG:--- WRITING  TRAILER  BLOCK
*13:29:48   .BG:    ADDRESS - START/END:                 FFFB/       FFFC
*13:31:49   .BG:    ADDRESS - START/END:                 FFFD/       FFFE
*13:32:37   .BG:  DOWN LOAD VERIFY COMPLETED
*13:33:55   .BG: CS_VERIFY COMPLETED
*13:34:34   .BG:START/END CONTROL STORE ADDRESS: 0/              748#
*13:35:35   .BG:---VERIFYING  MICROCODE  BLOCK
*13:37:20   .BG:>>>ACU 4K CONTROL STORE DOWNLOAD VERIFY<<<
*13:39:20   .BG:<<<CONTROL STORE DOWNLOAD VERIFY PASS - LAST ADDRESS =
*13:39:20   .BG:1864#>>>
*13:40:20   .BG:STOP
*13:41:38   .BG:END OF TASK CODE       0
```

NOTES: All times will reflect current execution times.
Microcode addresses indicated by “#” may change due to changes in microcode.

Figure 6-15. PROM BURN Execution Display Sequence

## 6-5.5 RDA STATUS AND CONTROL PROCESSOR UD5A12 CIRCUIT CARD REPLACEMENT.

The RDA Status and Control (RDASC) processor is composed of two rack-mounted card assemblies, a cabinet-mounted power subsystem, and a SCSI tape and disk-drive peripheral device. This paragraph provides data and instructions for replacement of the RDASC rack-mounted card assemblies which require special strapping, switch settings, or both.

6-5.5.1 Removal and Insertion General Information. The RDASC processor consists of a 21-slot chassis UD5A12.

Figure 6-16 identifies the location of the individual circuit cards in the UD5A12 assembly. The UD5A12 RDASC cards are mounted vertically in 17-inch and 15-inch-high slots. Card Extractor Assist Tabs are provided on the two outer corners to assist in proper seating/unseating of the cards during replacement. (Refer to Figure 6-17 for the representative RDASC processor circuit card physical structure). Always be sure to manually align the card by gently inserting the card edge connector into the backplane connector before securing the tabs. Refer to paragraph 6-5.5.4 for replacement procedures. Figure 6-18 depicts the RDASC processor edge-connected cables. Special care must be taken when removing/installing cards which have one or more edge-connected cables on the outboard edge. Always disengage the edge connector(s) prior to removing the card from its slot, and reconnect the cables only after the card has been reinstalled and properly seated.

6-5.5.2 Strapping and Switches. Each of the RDASC processor cards has a unique component complement and layout. For this reason, a separate figure is provided for each card which requires strapping or switch settings. In most cases, the strapping information is provided directly on the figure. In a few cases, because of the complexity of the strapping layout, a separate table is also provided. Figure 6-16 identifies the setup figures/tables for each RDASC processor card. The strapping and switch settings required for each card depend on their specific application and slot location. The card strapping and switch setting must always be checked prior to installation in the RDASC processor. Card strapping consists of wire-wrap jumpers placed between board-mounted stakes or pins. When a strap is to be removed, the wire unwrapping tool must be used to completely remove the unused strap. To install a strap, use the appropriate size wire-wrap tool and install the strap as designated on the appropriate illustrations.

6-5.5.2.1 Input/Output (I/O) Chassis Backpanel Wiring. The standard I/O chassis backpanel is segmented into two separate sections: one 9-slot section and one 12-slot section, which can be used as separate I/O chassis sections or cabled together to continue the MUX and DMA busses through each section.

6-5.5.2.2 Interrupt Priority Backpanel Wiring. The acknowledge (ACK) control line from the DMI board in the processor/S-bus chassis carries the interrupt ACK signal. This line breaks into a series of short lines at each device controller in an I/O chassis slot to form the daisy-chained priority. The ACK signal must pass through every controller equipped with interrupt control circuits in serial fashion. The CONN-0/CONN-1/CONN-2 Layout and Strapping information is shown in Figure 6-19.

| SLOTS | NAME | FIGURE |
|---|---|---|
| A0 | NOT USED | |
| A1 | NOT USED | |
| A2 | NOT USED | |
| A3 | TEMP SENSE MODULE | Figure 6-44 |
| A4 | MICROFIVE PROCESSOR | |
| A5 | DMI | Figure 6-26 |
| A6 | 8MB CMM | Figure 6-25 |
| A7 | NOT USED | |
| A8 | NOT USED | |
| A9 | NOT USED | |
| A10 | NOT USED | |
| A11 | ARCHIVE II CONTROLLER | |
| A12 | ODC | Figure 6-34 |
| A13 | SELCH | Figure 6-32 |
| A14 | PSPI | Figure 6-33 |
| A15 | SELCH | Figure 6-32 |
| A16 | NOT USED | |
| A17 | NOT USED | |
| A18 | VCI-C | Figure 6-27 |
| A19 | 8-LINE COMM MUX | Figure 6-30<br>Figure 6-31 (FAA) |
| A20 | A2-LSU/A1 TODY CLOCK | Figure 6-29/<br>Figure 6-28 |

FRONT VIEW

Figure 6-16. RDASC UD5A12 Component Layout and Strapping Index

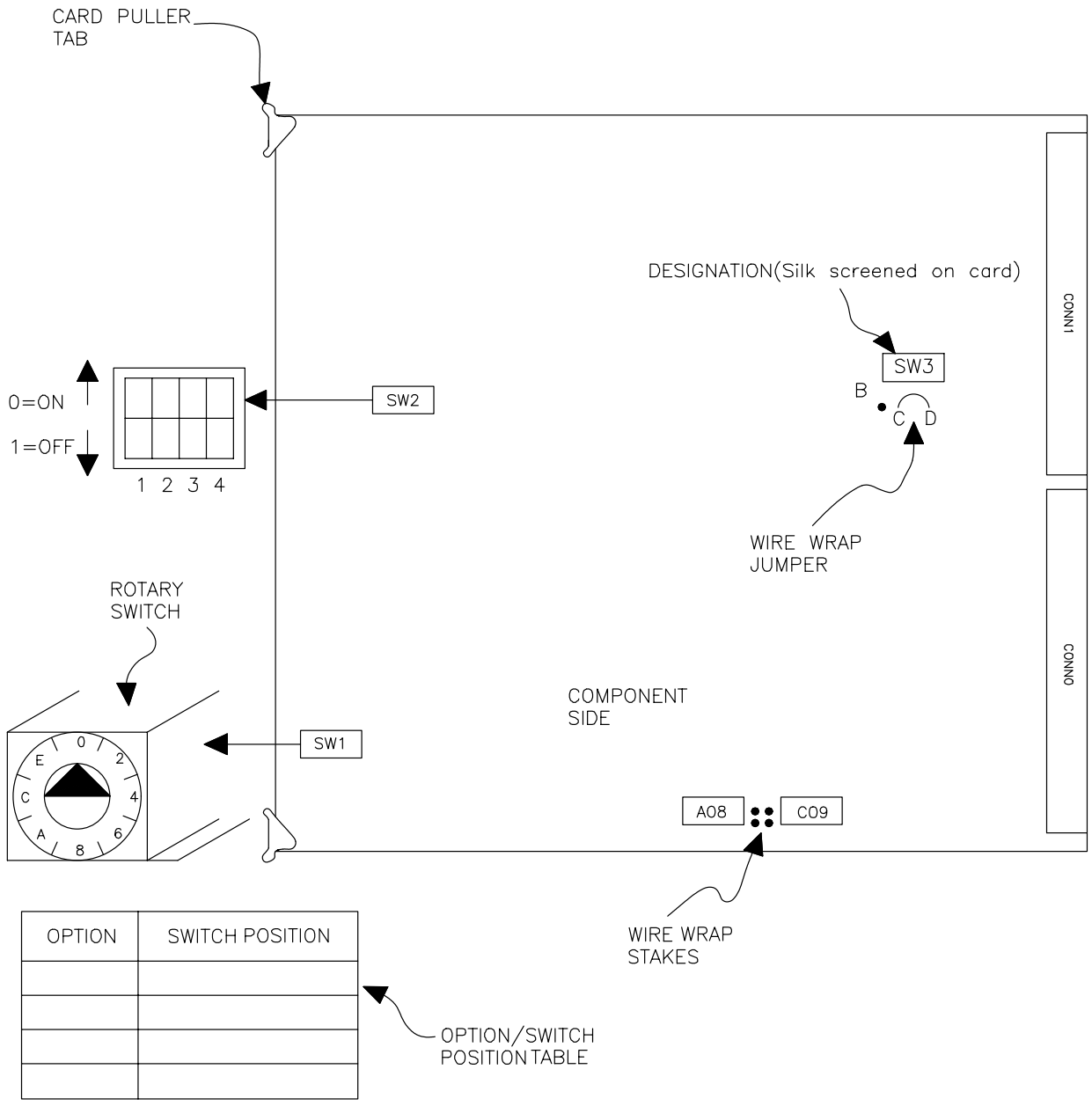


Figure 6-17. Typical RDASC Processor Circuit Card Physical Features

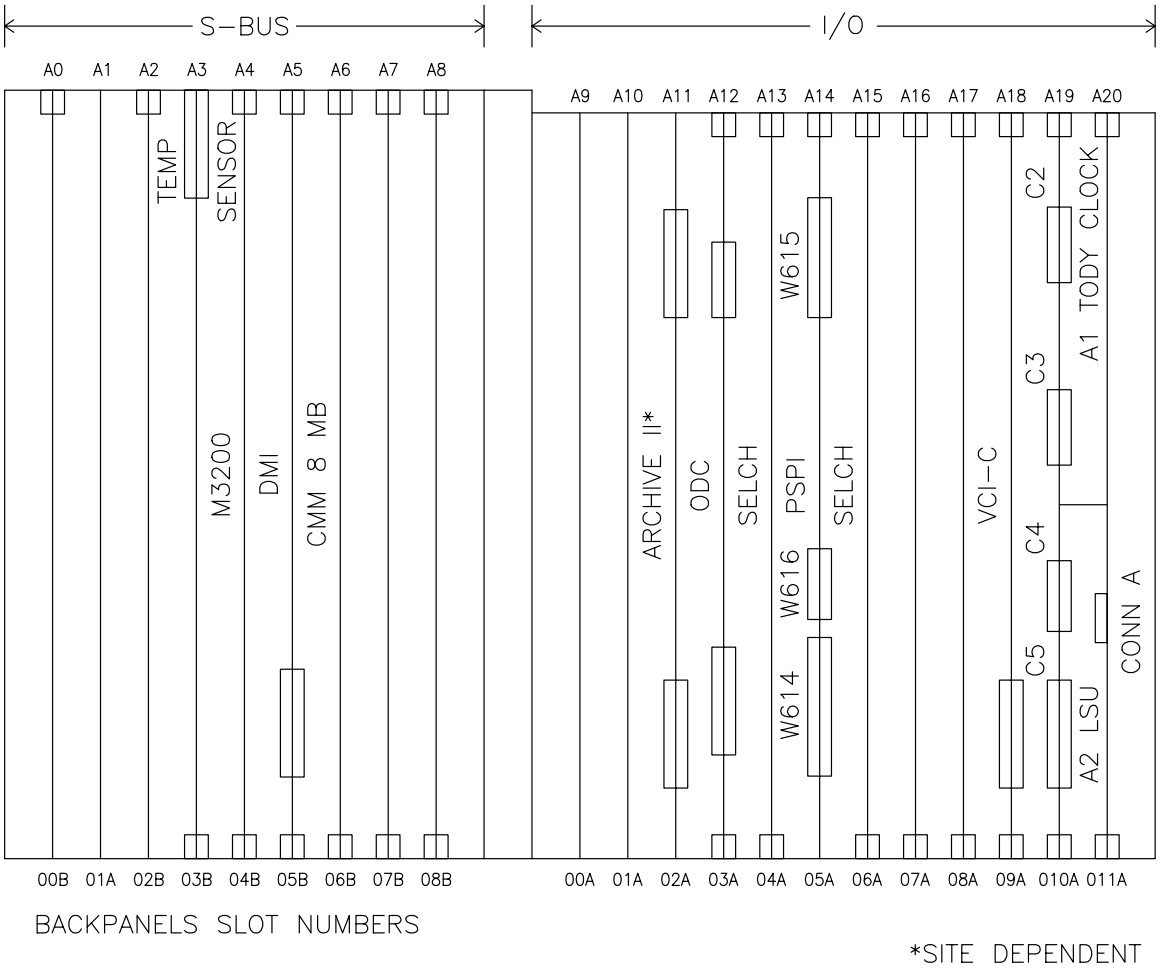


NX2138

Figure 6-18. RDASC Processor UD5A12 Edge Connected Cables

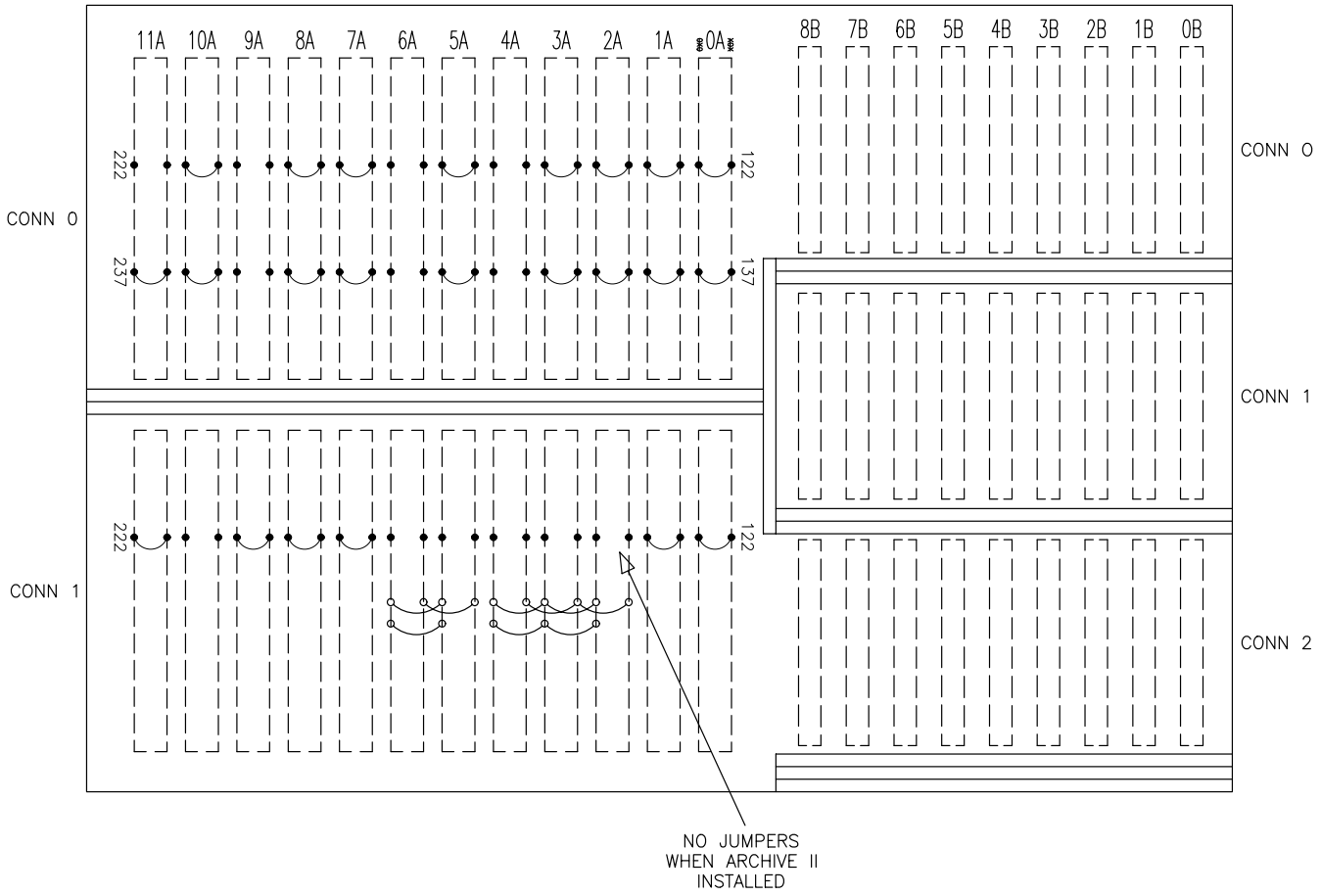


NX2139

Figure 6-19. CONN-0/CONN/-1 Layout and RACK0/TACK0 Strapping

Backpanel wiring for interrupt control at a given position is as follows:

- The daisy-chain bus is formed by a series of line segments that connect the receive acknowledge (RACK0), at pins 122-0 of a given slot, to the transmit acknowledge (TACK0), at pins 222-0, respectively, of the next slot (lower priority).
- The TACK0 is received as RACK0 and inputted at pins 122-0 and the TACK0 is outputted at pins 222-0 and so on, down the RACK0/TACK0 backpanel chain.
- Unequipped slots are bypassed by jumpers that short pins 122-0 to pin 222-0 together. These jumpers are orange wire wrap loops on the chassis backpanel.
- This daisy-chain can be continued to the CONN1 side of the I/O chassis backpanel by linking the CONN0 side and CONN1 side together with a private multiplexor (PMUX) bus cable and a 35-813 terminator. This cable is installed on the terminator at the end of the CONN0 side and connected to the terminator at the beginning of CONN1 side of the chassis. The CONN1 side is now considered an extension of the CONN0 side and the RACK0/TACK0 chain continues down that side.

Backpanels are wired with jumpers on all slots. Therefore, whenever a chassis slot is equipped with a controller that requires interrupt capability, the jumper between pins 122-0 and 222-0 and/or the jumper between pins 122-1 and pin 222-1 must be removed at that slot according to installation instructions for that controller.

6-5.5.2.3 Input/Output (I/O) Chassis Terminators. The 35-813M01, F01, F02 and 35-814 F01, F02 terminators used in the system are installed by inserting them onto the appropriate pins on the back of the I/O chassis for that required slot. For terminating locations, refer to Table 6-18 and Figure 6-20.

6-5.5.2.3.1 35-813M01 Terminators. Terminators 35-813F01M07 (6 ea.) are used to end the processor MUX bus and the PMUX bus signals along the I/O chassis backplane. The 35-813F01M01 terminator at CONN0 SLOT 00A is used with cable 17-989F02R03 to extend the MUX bus to 35-813F01M01 terminator at CONN1 SLOT 11A which is used to end the MUX bus on the lower portion of the I/O chassis. All six 35-813F01M01 terminators should be strapped from E7 to E8 and E9 to E10. In addition to these straps, the 35-813 terminator at CONN0 SLOT 00A should also be strapped E1 to E3, whereas the 35-813 terminator at CONN1 SLOT 11A should also be strapped at E2 to E3. If the bus is longer than two slots, install a 35-813F01M01 terminator on each 8-slot chassis throughout the length of the bus. The 35-813F01M01 terminator is shown in Figure 6-21. The 35-813F01M01 terminator is used in the following slots: CONN 1 SLOT 07A, CONN1 SLOT 05A, CONN 1 SLOT 00A, CONN 0 SLOT 08A, CONN 1 SLOT 11A, and CONN 0 SLOT 00A.

6-5.5.2.3.2 35-814M01 Terminators. Terminators 35-814F01 and F02 are used to end the DMA bus signals along the I/O chassis backpanel. The 35-814F01 is used on the CONN0 side of the I/O chassis and the 35-814F02 is used on the CONN1 side of the I/O chassis. The 35-814F02 terminator is shown in Figure 6-22, the 35-814F01 does not contain DM1, RM1, RM2, and R1 through R4. The 35-814F01M01 terminator is used in the following slot: CONN 0 SLOT 01A. The 35-814F02M01 terminator is used in the following slot: CONN 1 SLOT 01A.

6-5.5.2.3.3 35-ADL. The 35-ADL terminator is used behind the A4 slot (04B) as shown in Figure 6-20.

6-5.5.2.3.4 S-BUS Terminator Board (35-886). The S-BUS terminator board (35-886) is mounted vertically on the S-BUS I/O chassis backpanel with component side to the right (as viewed from the rear). The S-BUS terminator board is shown in Figure 6-23. This board should be installed in slot 08B. CONN 0, CONN 1, and CONN 2 connect to the S-BUS I/O chassis backpanel. J1A is used to distribute the clock signals.

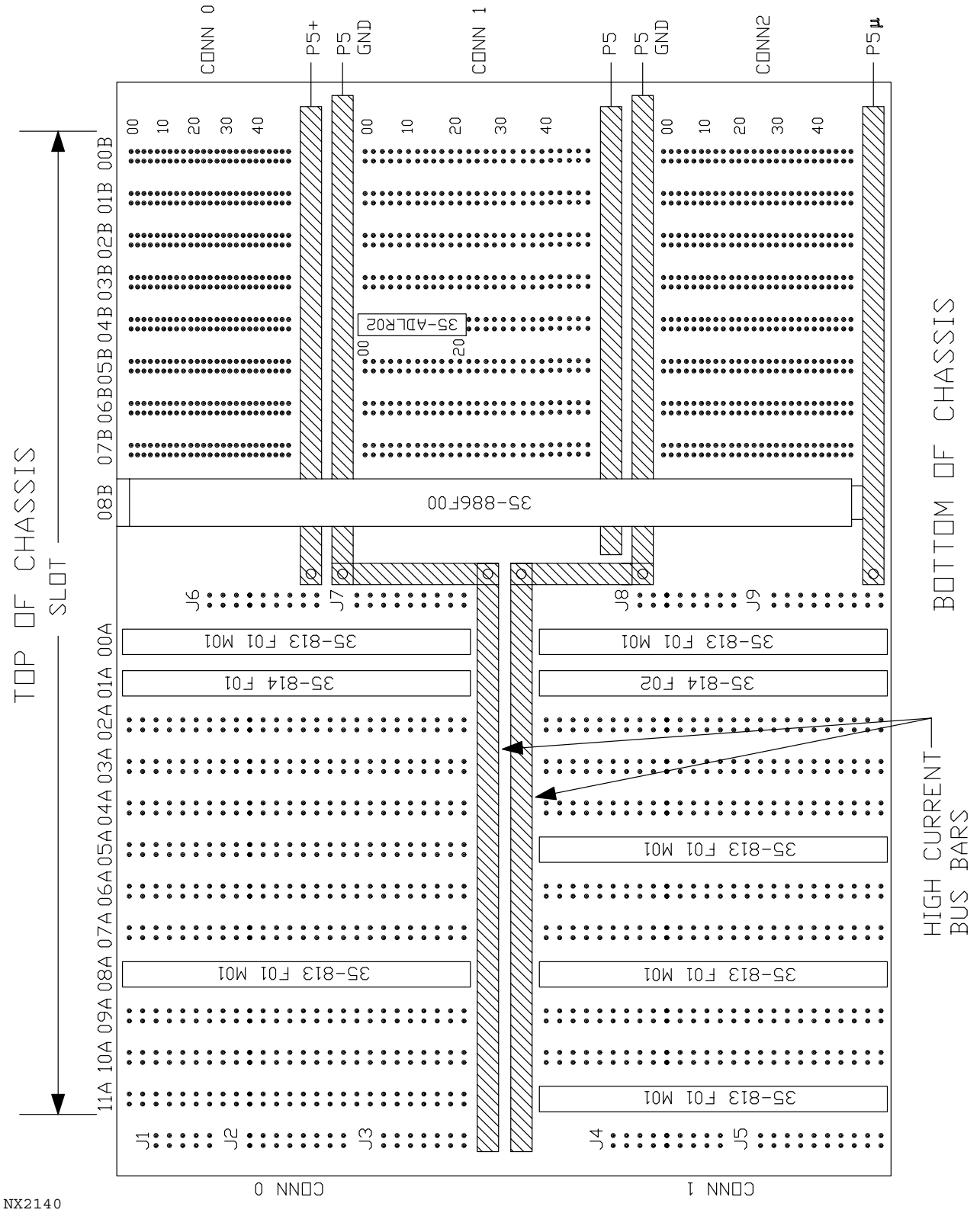


Figure 6-20. RDASC Processor UD5A12 (Rearview) Terminator Board Locations

Table 6-18. RDA M3200 Processor Assembly, UD5A12, Terminator Locations

| Terminator | Type | Backplane Slot |
|---|---|---|
| AT1 | 35-886 | 08B, CONN 0-2 |
| AT2 | 35-ADL | 04B, CONN 1 |
| AT3 | 35-813F01 | 00A, CONN 0 |
| AT4 | 35-813F01 | 00A, CONN 1 |
| AT5 | 35-814F01 | 01A, CONN 0 |
| AT6 | 35-814F02 | 01A, CONN 1 |
| AT7 | 35-813F01 | 08A, CONN 0 |
| AT8 | 35-813F01 | 11A, CONN 1 |
| AT9 | 35-813F01 | 07A, CONN 1 |
| AT10 | 35-813F01 | 05A, CONN 1 |

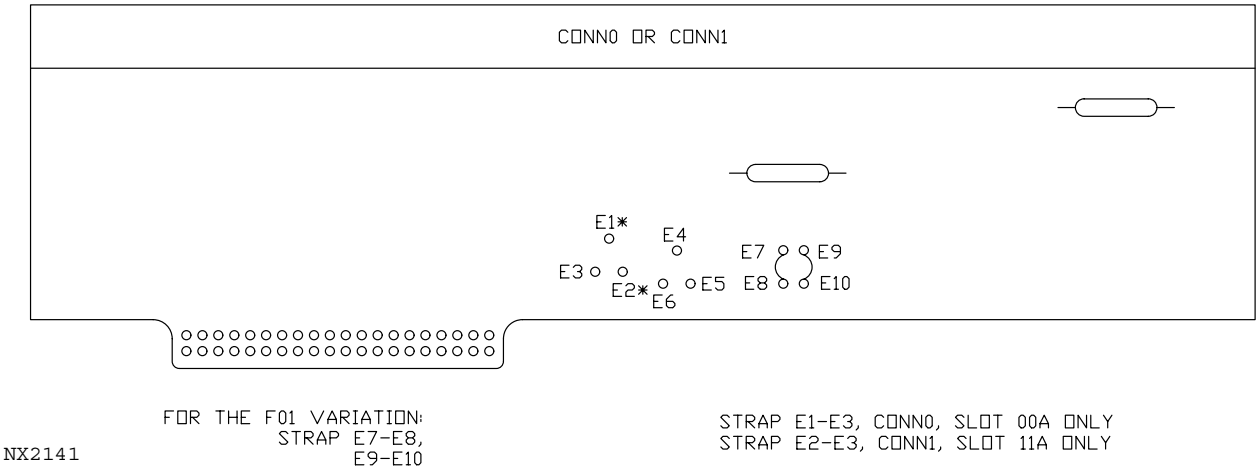


Figure 6-21. Terminator (35-813M01)

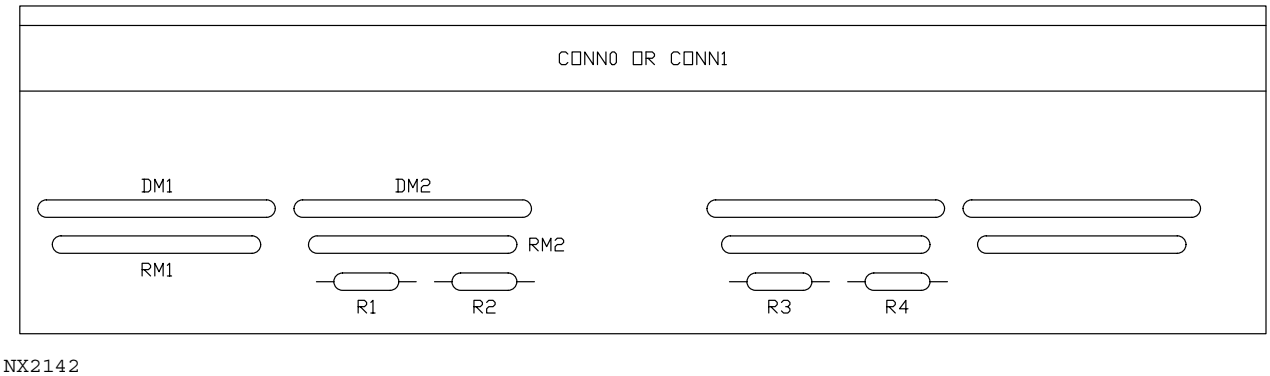


Figure 6-22. Terminator (35-814, F02 Variation)

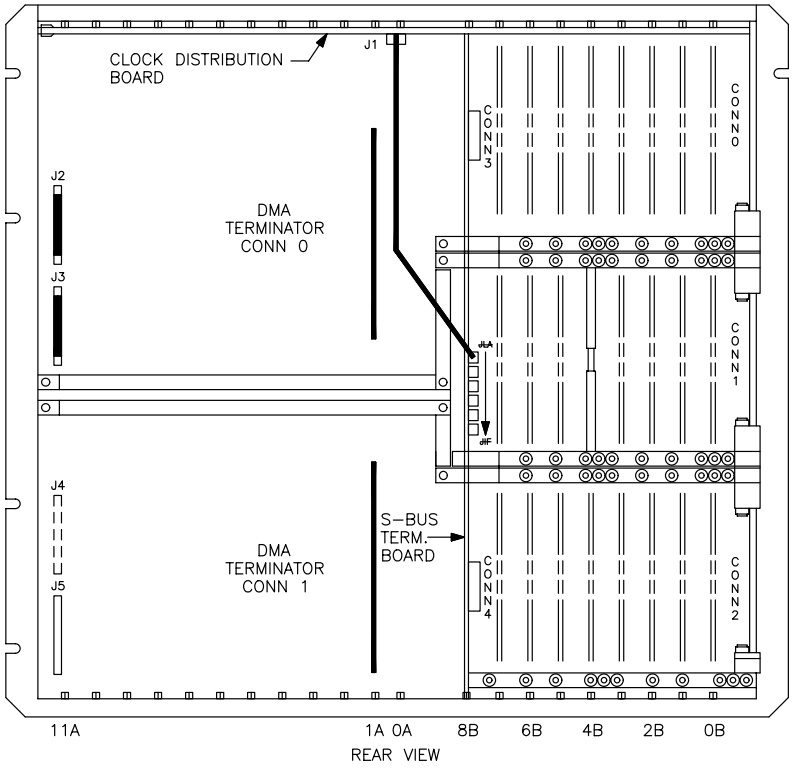


S–bus/10 Chassis Backpanel (Rear View)

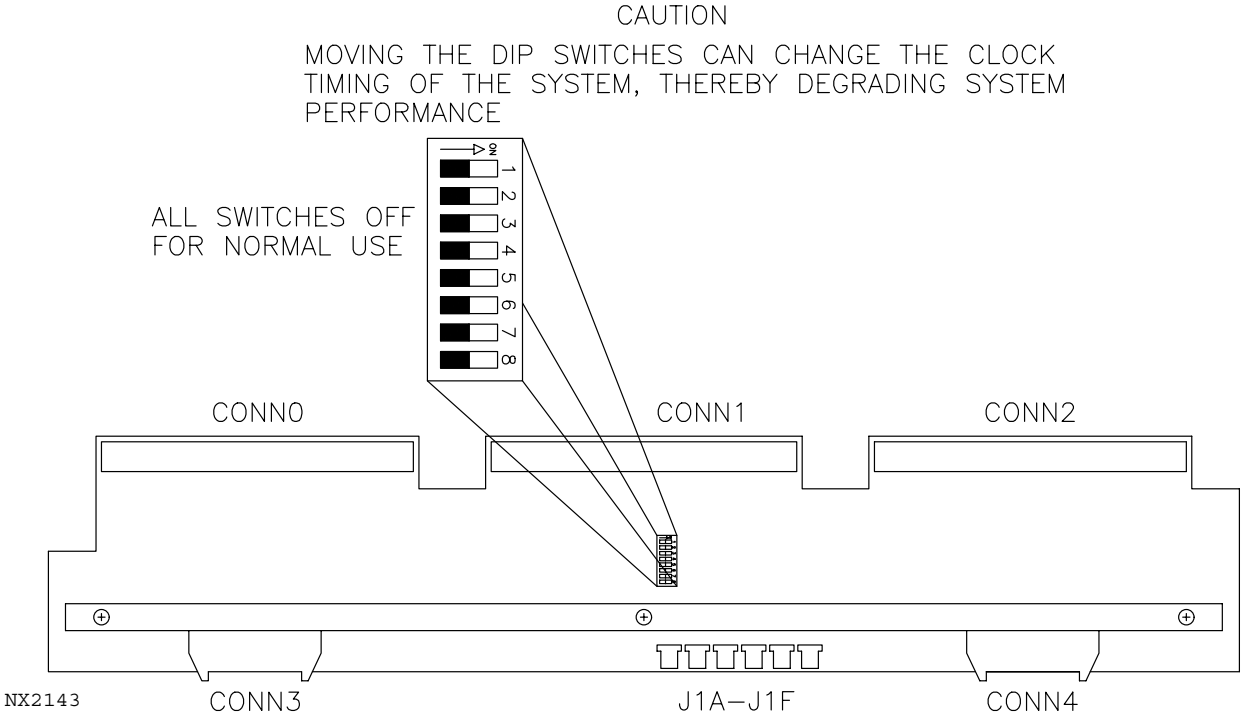


Figure 6-23. S-bus Terminator Board (35-886)

6-5.5.3 Half-Board Disassembly and Assembly. There are two circuit cards in the RDASC processor which require a special removal and replacement procedure. The LSU and TODY clock circuit cards require the removal of the circuit board and then disassembly of the two half-boards before replacement of that half-board. Figure 6-24 depicts two half-boards assembled. Table 6-19 contains the special half-board disassembly/assembly procedure.

6-5.5.4 RDA Status and Control Processor UD5A12 Circuit Card Replacement Procedure. One technician is required for this procedure.

6-5.5.4.1 Equipment and Tools Required.

1. Miniature pliers, diagonal cut
2. Wire-wrap tool kit
3. ESD wrist strap with clip lead
4. Screwdriver set, Phillips-tip.

6-5.5.4.2 Initial Conditions/Preliminary Setup.

**WARNING**

Failure to perform applicable shutdown steps in Table 6-13 could cause serious injury or death.

**NOTE**

Refer to paragraph 6-5.2 for special considerations for replacement procedures.

1. Open the front right UD5 cabinet door and locate the RDASC Processor UD5A12.
2. Perform steps 1 through 5, 16, 17, and 20 of Table 6-13 to shut down RDASC processor.

6-5.5.4.3 Replacement Procedure.

**ESD** **CAUTION** **ESD**

All WSR-88D printed circuit cards are electrostatic sensitive devices which require special handling. Refer to paragraph 6-5.2.6 .

1. Put ESD wrist strap on and attach clip lead to cabinet chassis.
2. Remove circuit board retaining bar from chassis. Disconnect edge connector cables, and cut tie wraps required to remove the defective board.
3. Locate and remove the defective card from its slot. If card is mounted on a half board, perform the procedure in Table 6-19.

4. Remove the replacement card from its conductive wrapping.
5. Check/set the switches/straps on the card according to the figure and tables specified in Figure 6-16.
6. Install the replacement card in the vacated slot (component side to left). Ensure the card is firmly seated by closing the extractor tabs.
7. Replace retaining bar on chassis.
8. Remove wrist strap and close cabinet door.
9. Perform steps 8, 15, 16, and 17 of Table 6-15 to turn on RDASC processor.

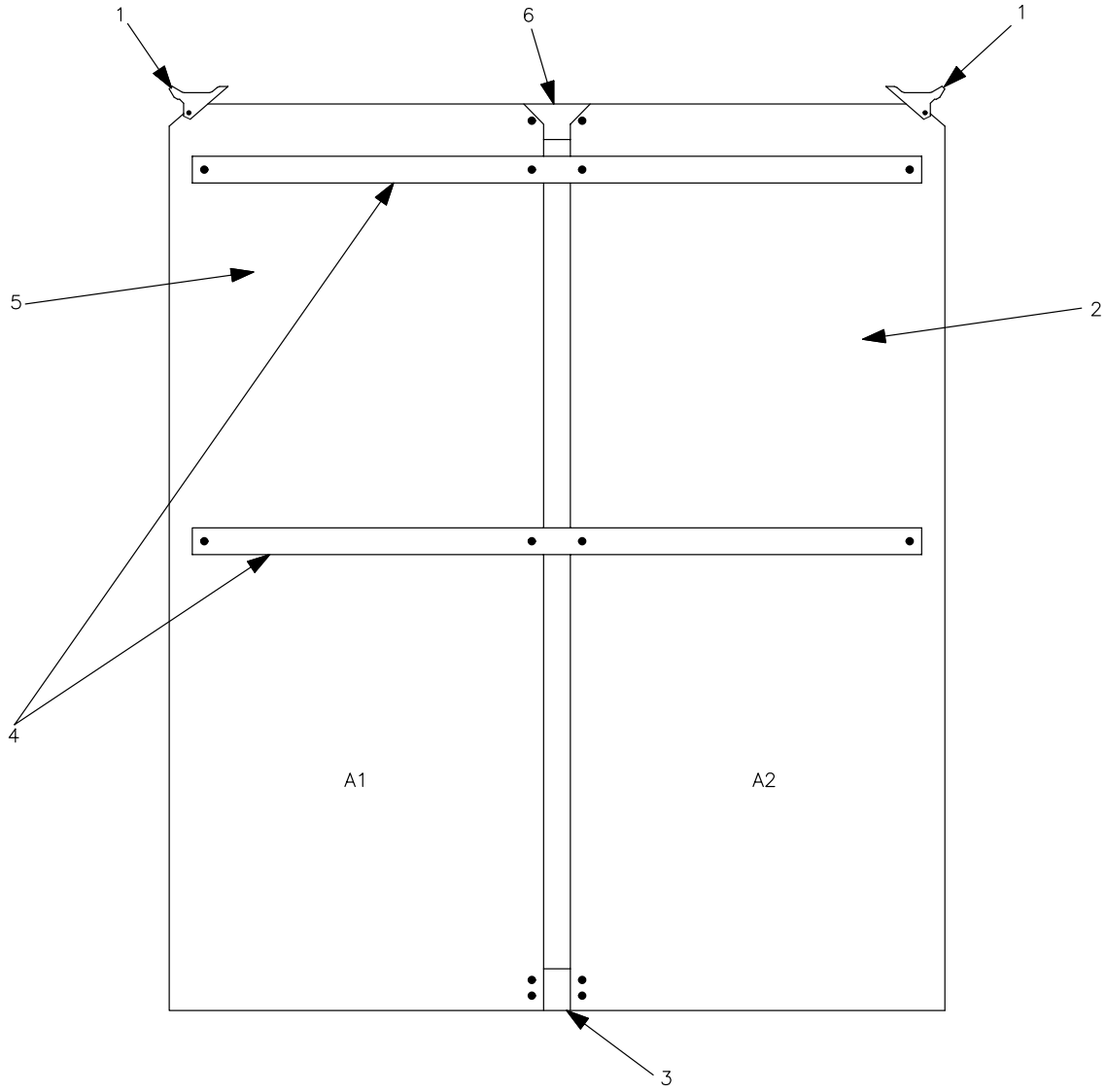


NX2144

Legend for Figure 6-24

1. Card Puller Tabs
2. LSU Card (A2)
3. Rear of Assembly
4. Retaining Bars
5. TODY Card (A1)
6. Front of Assembly

Figure 6-24. Two Half-Boards Assembled

Table 6-19. Half-Board UD5A12A20A1 and UD5A12A20A2 Disassembly/Assembly Procedure

| Step | Action |
|---|---|
| | **NOTE**<br>Use ESD procedure in paragraph 6-5.2.6 when performing half-board removal/replacement procedure. |
| 1. | Remove defective half-board front securing device using proper screwdriver. See Figure 6-24, item 6. |
| 2. | Remove defective half-board with card puller tabs. See Figure 6-24, item 1. |
| 3. | Remove defective half-board rear securing device, using proper screwdriver. See Figure 6-24, item 3. |
| 4. | Remove the defective half-board retaining bars using proper screwdriver. See Figure 6-24, item 4. |
| 5. | Place replacement board into half-board assembly, being sure to secure new board to front and rear securing devices and both retainer bars. |
| 6. | If applicable, strap board by referencing procedure in Figure 6-16. |
| 7. | Replace board assembly A1 or A2 in computer chassis. |
| 8. | Replace half-board securing device. |
| 9. | Continue replacement procedure in paragraph 6-5.5.4.3 , step 7. |

6-5.5.5 Time of Day (TODY) Battery UD5A12A20A1BT1/BT2 Replacement Procedure.

One technician is required for this procedure.

6-5.5.5.1 Equipment and Tools Required.

1. Screwdriver set, jewelers type
2. Sealed rechargeable lithium batteries (watch type) (Qty. 2)
3. ESD Component Handling Kit.

6-5.5.5.2 Initial Conditions/Preliminary Setup.

1. Perform paragraph 6-5.5.4 to shutdown RDASC processor and prepare chassis for card replacement. Ensure ESD wrist strap is worn.

6-5.5.5.3 Replacement Procedure.

1. Remove the TODY clock circuit card (UD5A12A20A1) from the RDA Status and Control Processor UD5A12.
2. Using appropriate screwdriver, loosen holding spring until it can be moved aside to gain access to batteries. DO NOT remove holding spring. See Figure 6-28 for location of batteries.

3. Using fingers, remove batteries from holder.
4. Place replacement batteries into holder.
5. Slide holding spring over batteries and, using appropriate screwdriver, tighten until batteries are secure.
6. Place the TODY clock circuit card into the RDASC processor chassis. Perform remaining replacement procedures in paragraph 6-5.5.4 .
7. Perform the RDA Data Processor Clock Time Set procedure to set the time (refer to paragraph 4-3.3 ).

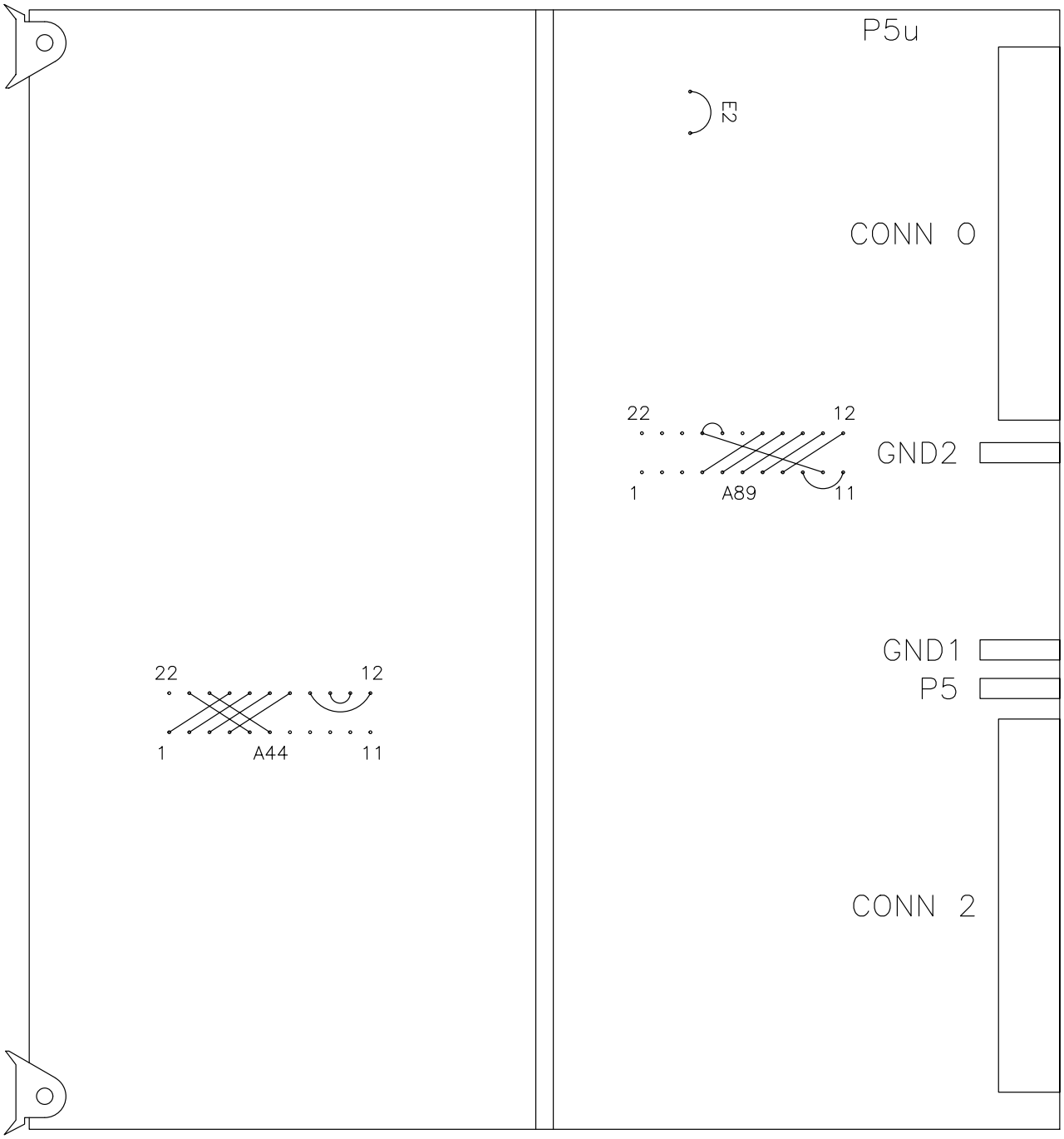


NOTE: STRAPPING SHOWN IS AS FOLLOWS:

| LOCATION | STRAPPING | LOCATION | STRAPPING |
|---|---|---|---|
| A44 | 12–15, 13–14, 4–16, 5–21, 6–20, 1–19, 2–18, 3–17 | A89 | 4–16, 9–11, 8–12, 7–13, 6–14, 5–15, 10–19, 19–18 |

NX2145

Figure 6-25. 8 MB CMM UD5A12A6 Strapping

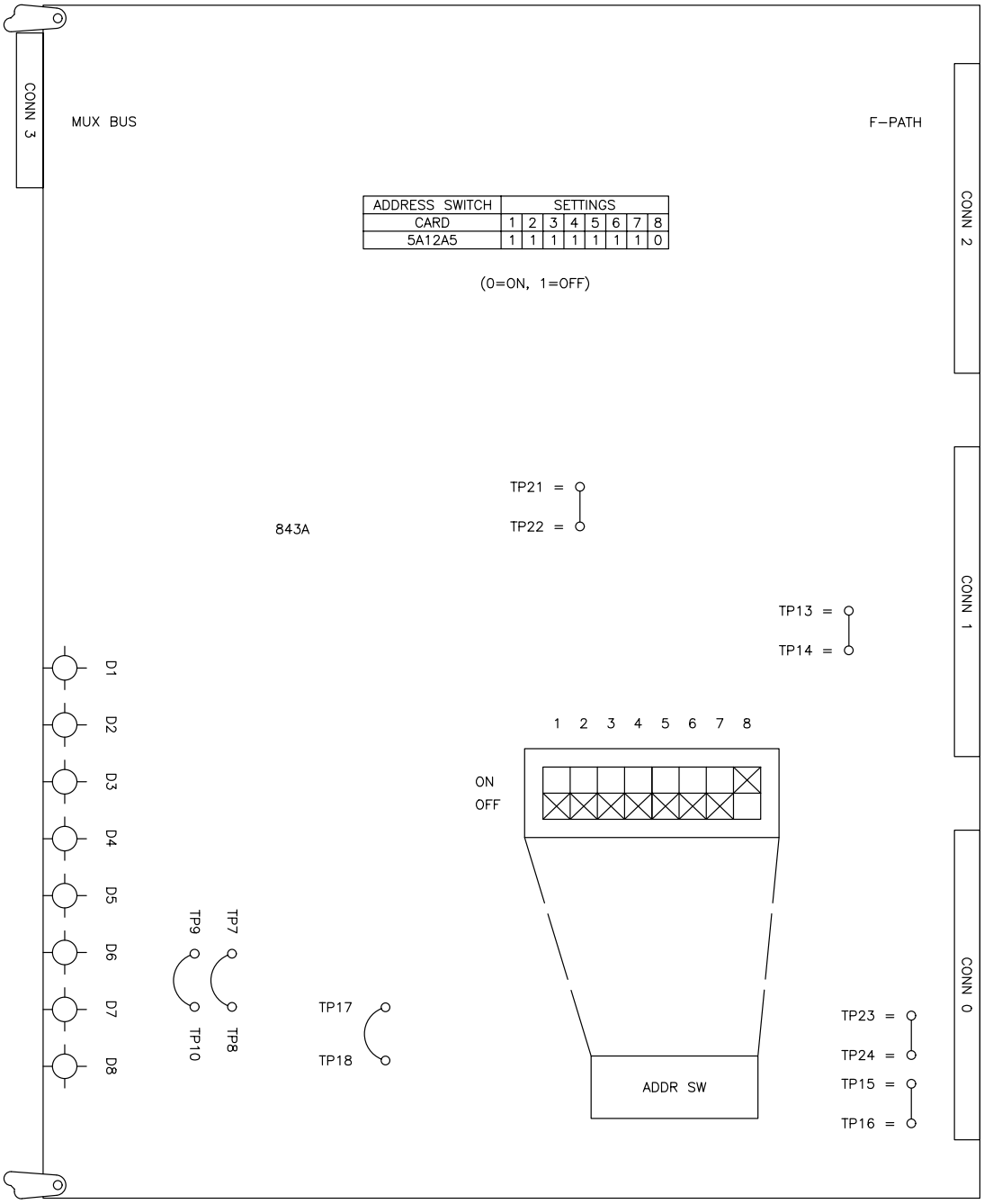


* TP 13, 14, 15, 16, 21, 22, 23, and 24 are Factory Set.

NX2146

Figure 6-26. DMI UD5A12A5 Strapping

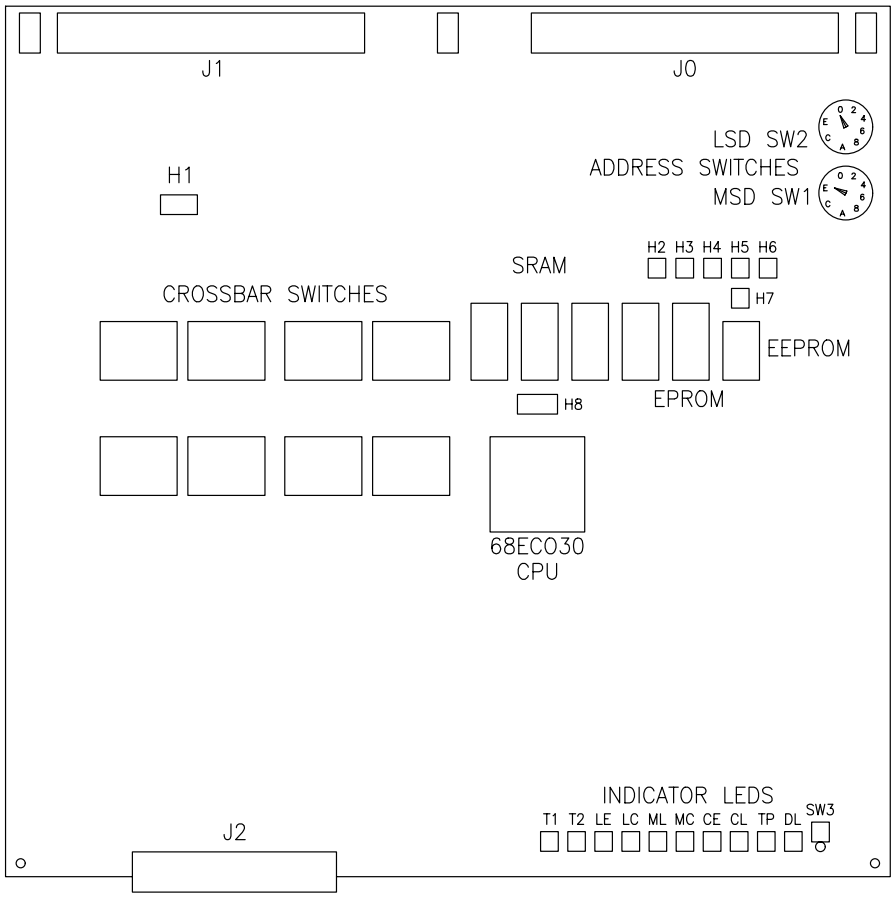


NX2147

VCI-C Board Jumpers/Switches

The Concurrent I/O space device is set on SW1 and SW2. The MSD (most significant digit) and LSD (least significant digit) of the address can be set with these two rotary switches. SW1, the MSD is set to E. SW2, the LSD is set to Ø. The LSD switch should be set to a module 4 values. This is due to the VCI-C requiring the use of four I/O space addresses.

The front panel of the VCI-C has a toggle switch labeled LSU/OFF/CONF. This is SW3 on the silk-screen of the VCI-C. This switch should normally be in the center, or OFF, position.

Figure 6-27. VCI-C Board UD5A12A18 Strapping

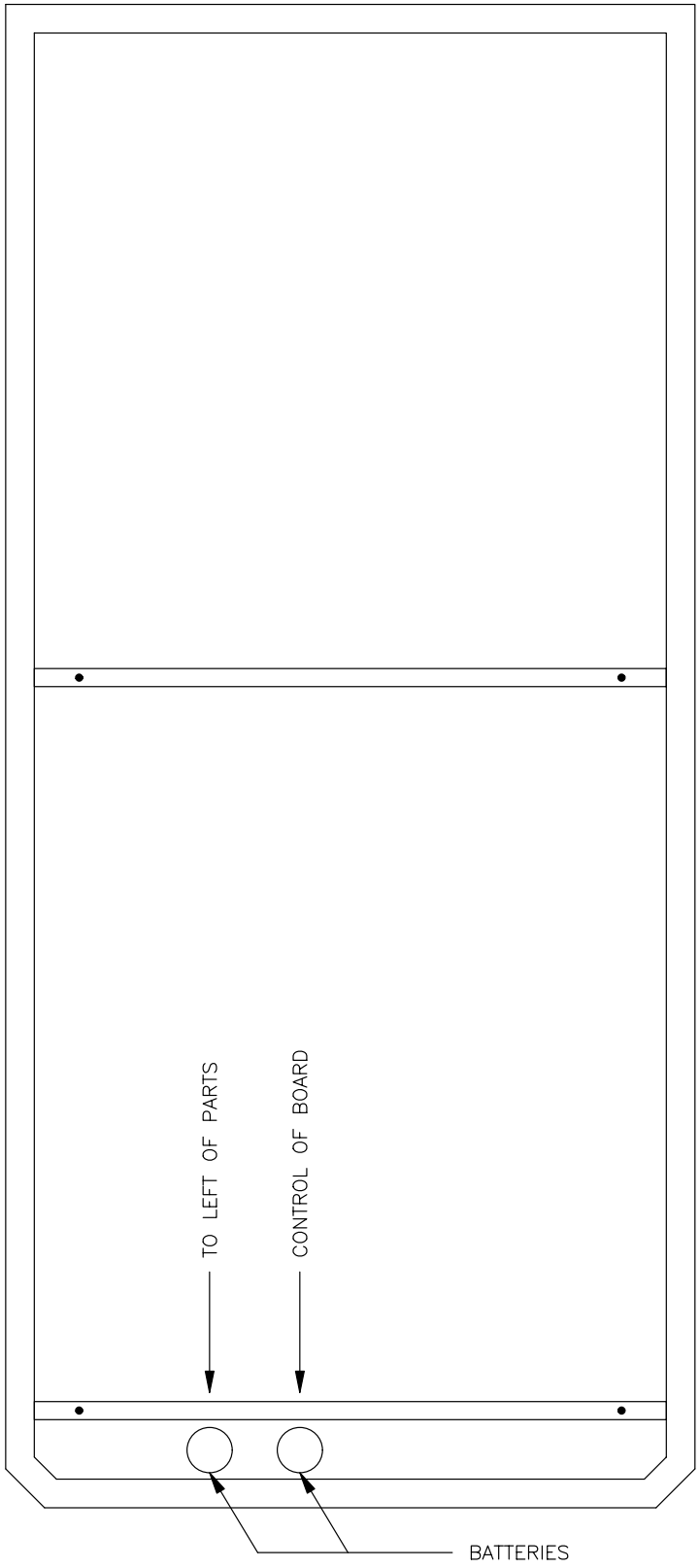


Figure 6-28. TODY Clock UD5A12A20A1 Battery Location

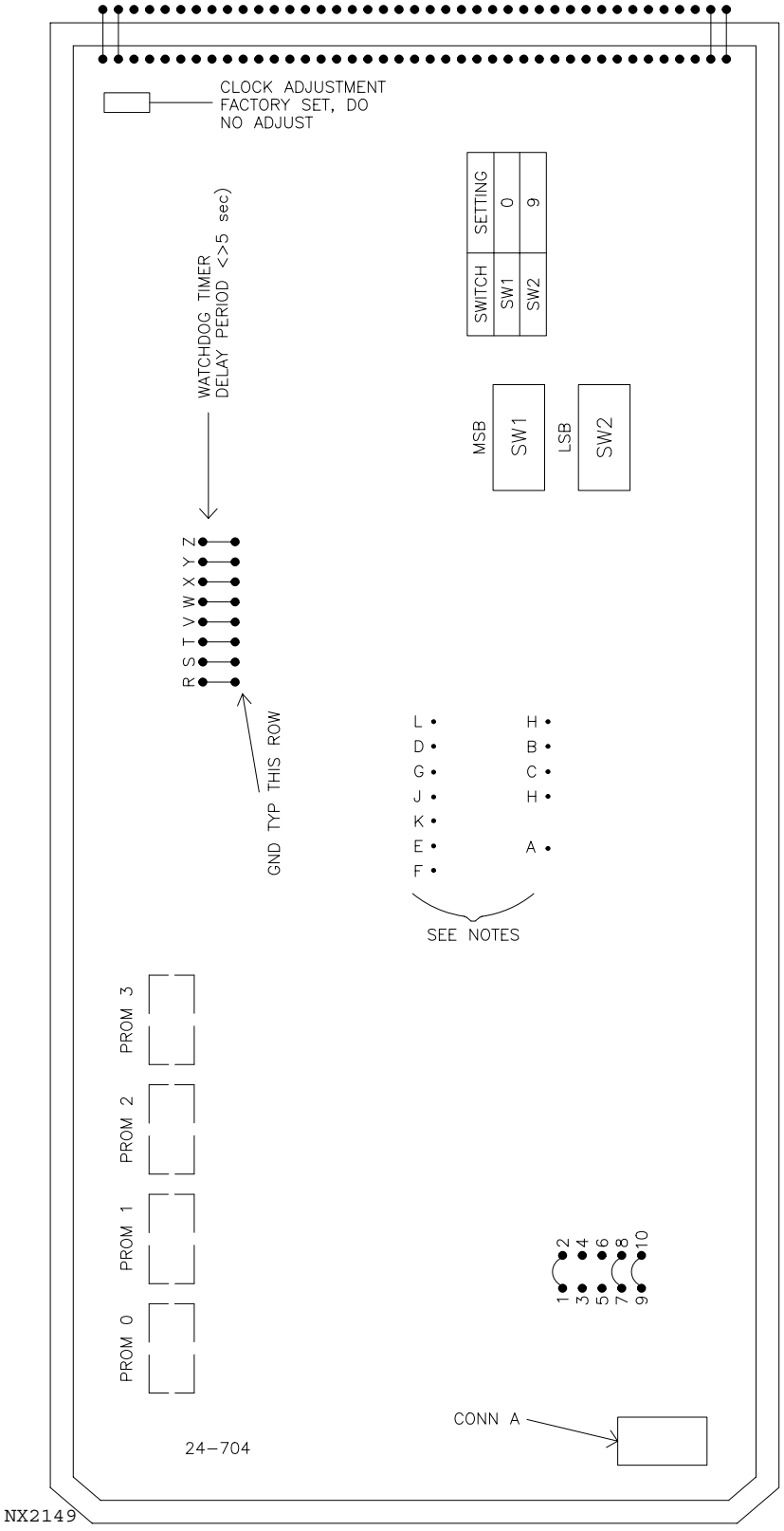


NOTES:

IF 3 PROMS (0–2) ARE INSTALLED, THE STRAPPING IS:

D TO B
J TO C
K TO H
E TO A

IF 4 PROMS (0–3) ARE INSTALLED, THE STRAPPING IS:

L TO H
G TO B
J TO H
J TO A
G TO C

Figure 6-29. LSU UD5A12A20A2 Strapping

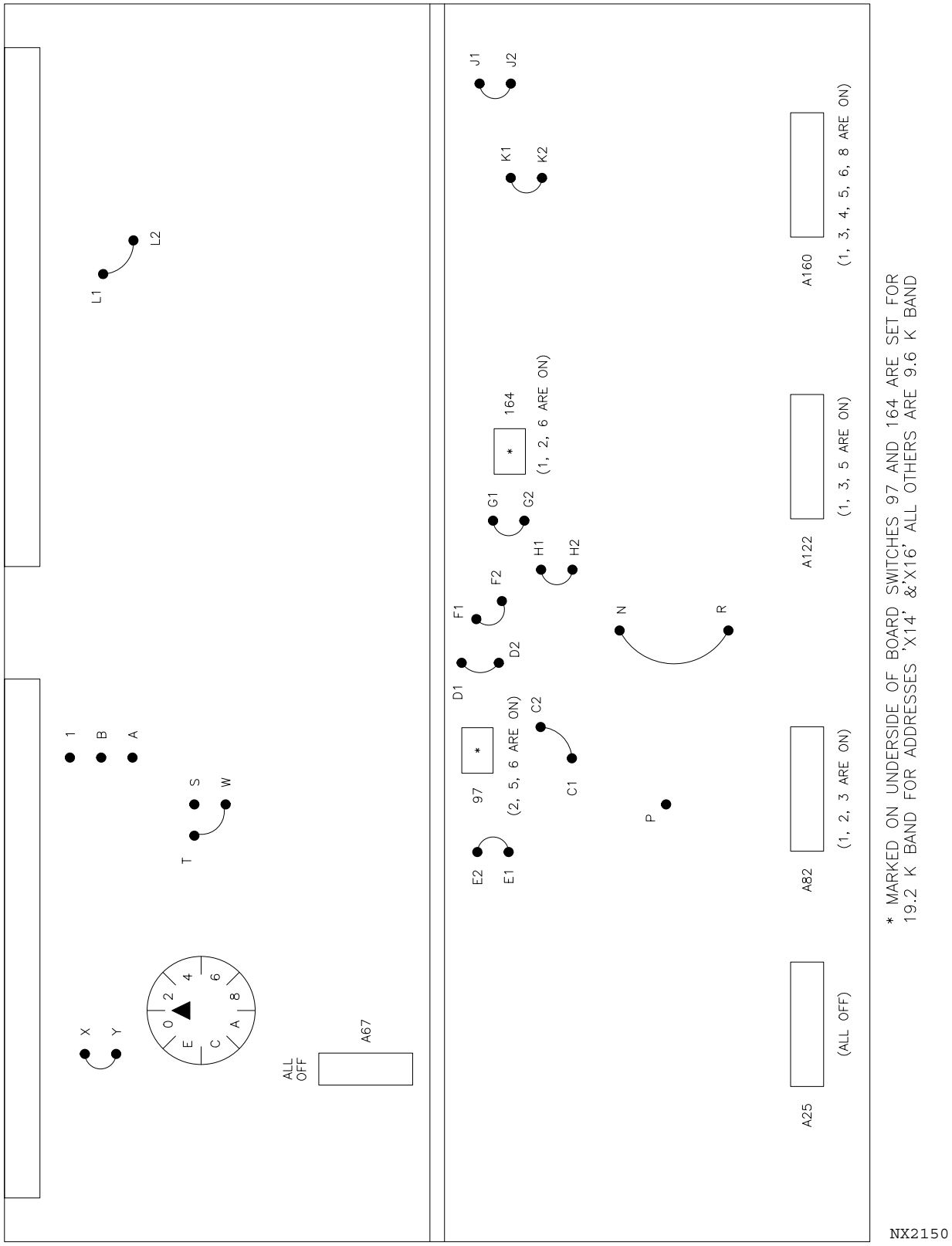


Figure 6-30. 8-Line COM MUX UD5A12A19 Strapping

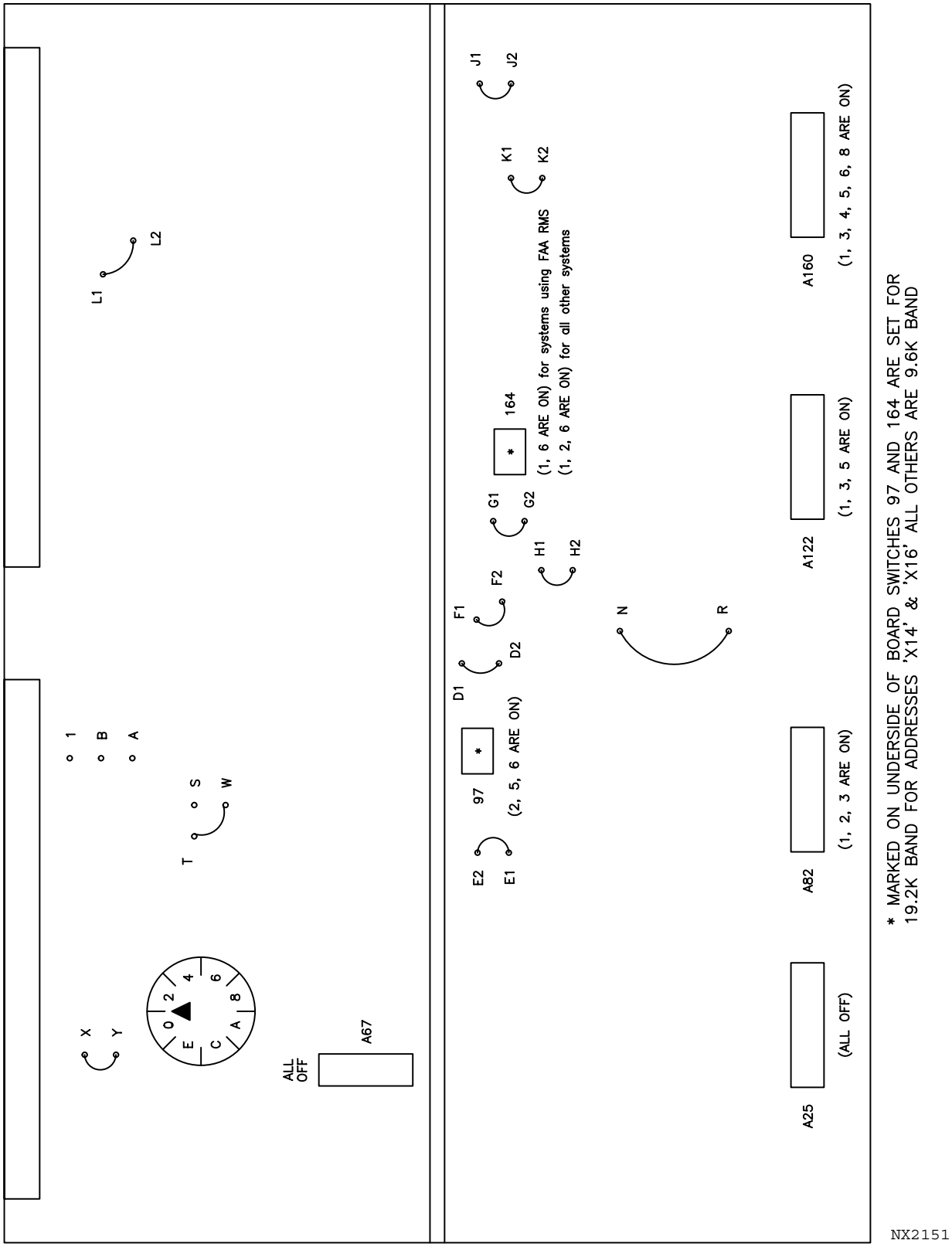


Figure 6-31. FAA RMS 8-Line COM MUX UD5A12A19 Strapping

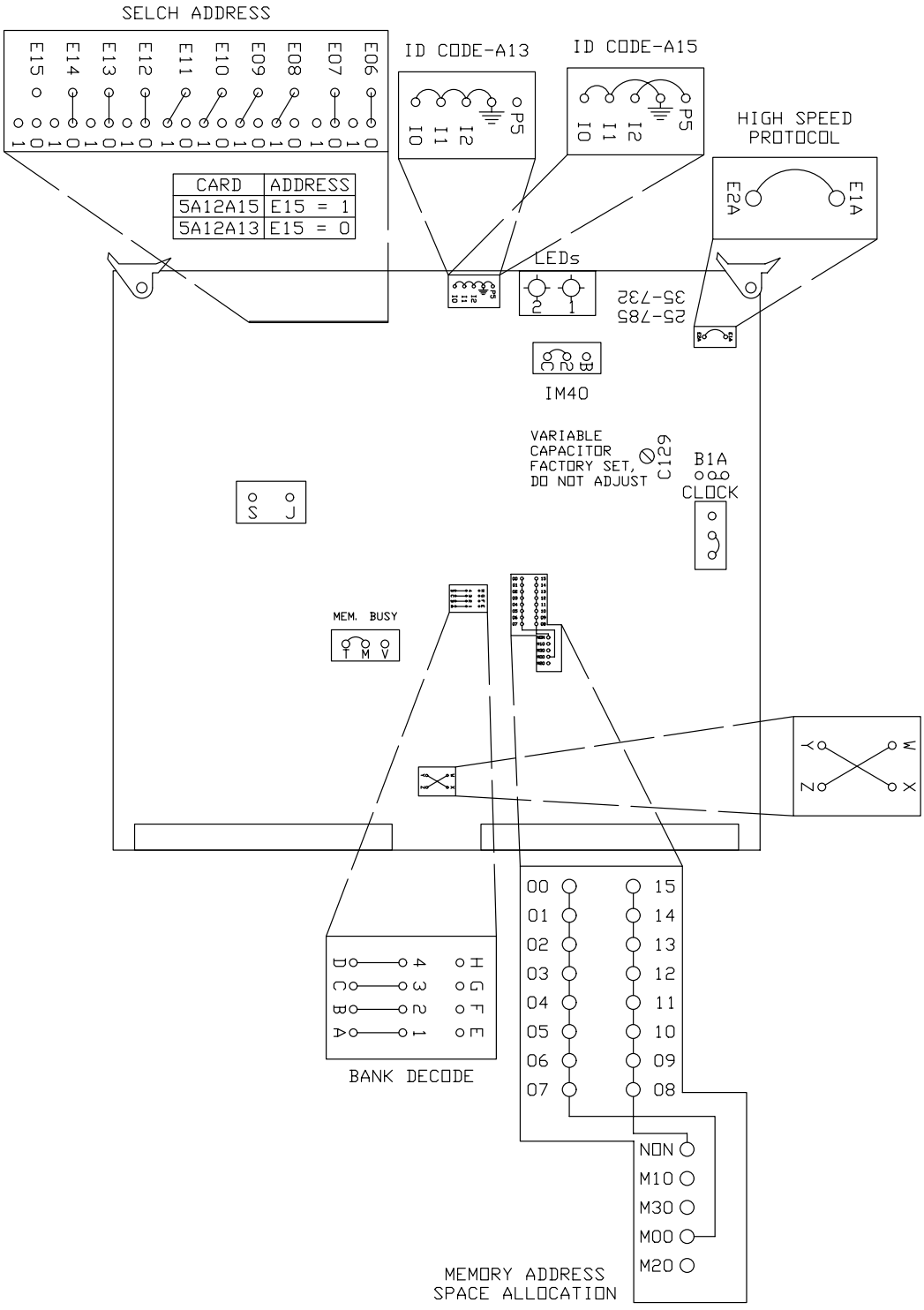


NX2152

Figure 6-32. SELCH UD5A12A13, UD5A12A15 Strapping

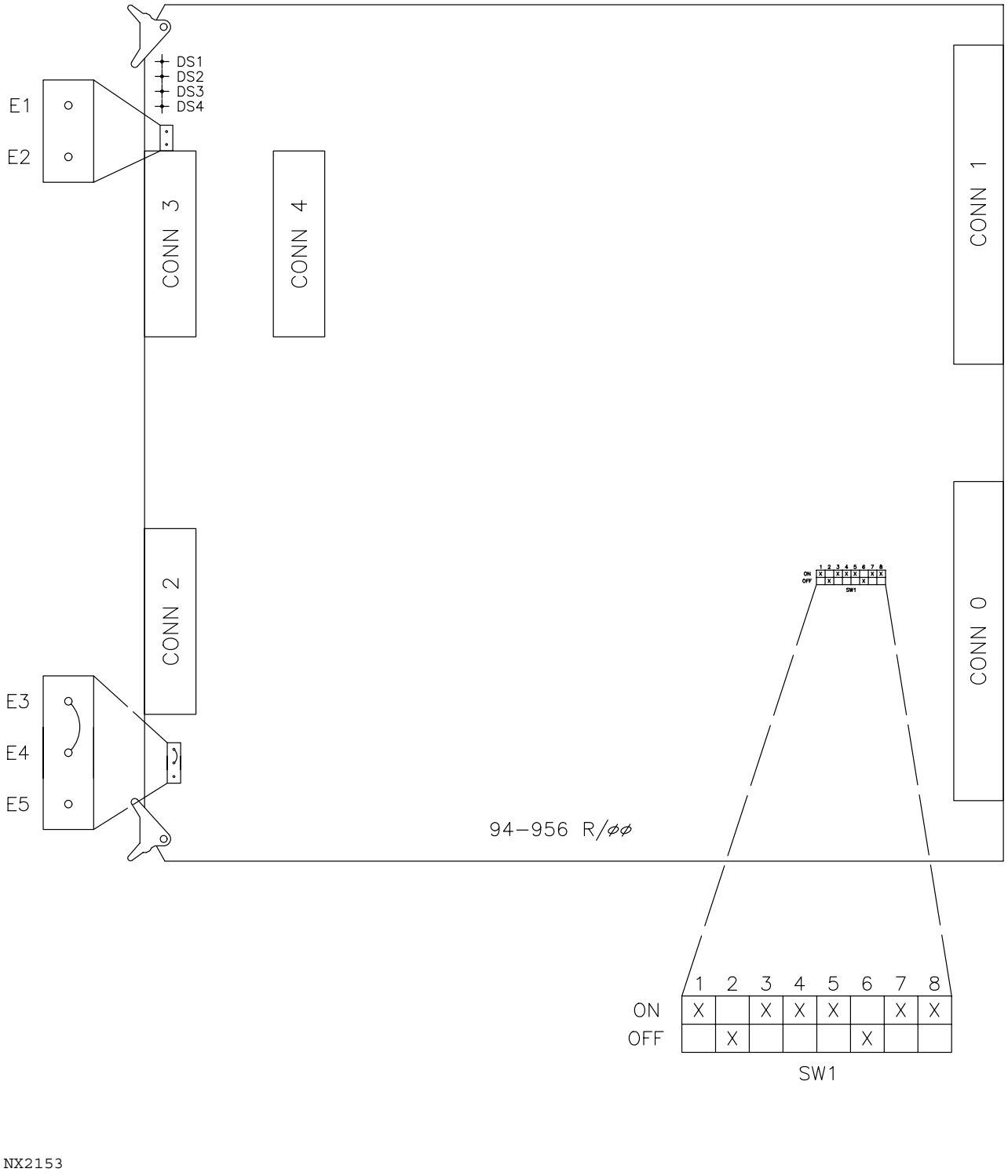


Figure 6-33. PSPI UD5A12A14 Strapping

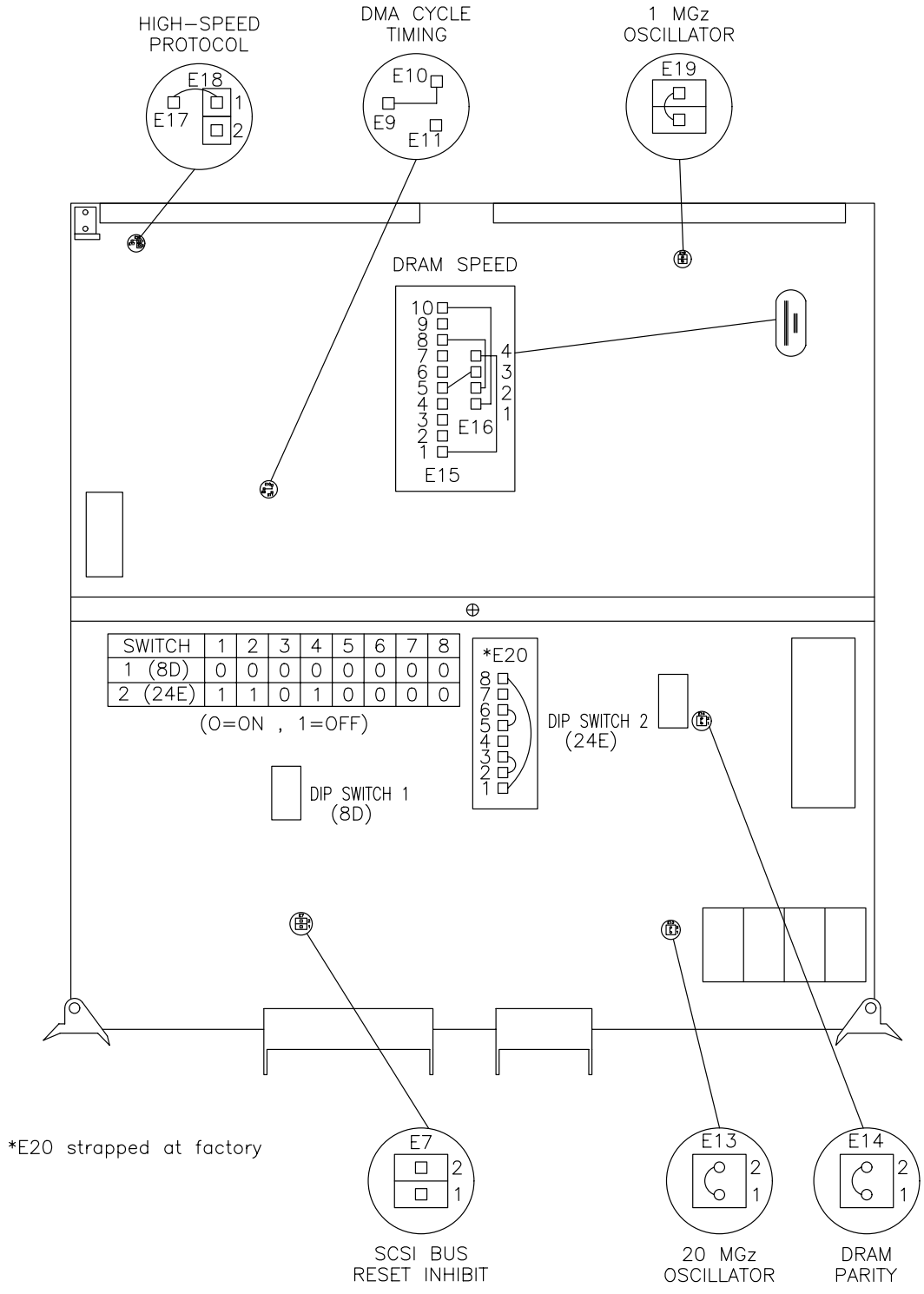


NX2154

Figure 6-34. ODC UD5A12A12 Strapping

6-5.6 RF FREQUENCY GENERATOR UD4A1 REPLACEMENT PROCEDURE.

One technician is required for this procedure.

6-5.6.1 Equipment and Tools Required.

1. Screwdriver set, Phillips-tip
2. Combination wrench set
3. Torque wrench, SMA connector.

6-5.6.2 Initial Conditions/Preliminary Setup.

**WARNING**

Failure to perform applicable shutdown steps in Table 6-13 could cause serious injury or death.

**NOTE**

Refer to paragraph 6-5.2 for special considerations for replacement procedures.

1. Perform steps 1 through 6 of Table 6-13 to shut down Receiver Cabinet UD4.
2. Open the UD4 rear cabinet door; locate and open the inner component door.

6-5.6.3 Replacement Procedure.

1. Remove P6 and P5 after sliding the plug lock to the unlocked position.
2. Remove SMA connectors P1 through P4 using the proper wrench.

**CAUTION**

When removing securing hardware, use a suitable holding screwdriver to prevent dropping hardware accidentally.

3. Remove mounting screws, lock washers, and flat washers securing UD4A1 to the mounting plate using proper holding screwdriver.
4. Remove defective assembly and set aside.

**NOTE**

Replacement RF Frequency Generator does not contain a new Plug-in Frequency Unit.

5. Refer to paragraph 6-5.38 to remove and replace the Plug-in Frequency Unit UD4A1A1. Install old UD4A1A1 into replacement RF Generator.

6. Mount new assembly using the proper screwdriver.
7. Connect P1 through P4 and tighten each connector with SMA torque wrench to 8 inch-pounds.
8. Connect P5 and P6 and slide the plug lock to the locked position.
9. Close and secure inner component door and cabinet door.
10. Perform step 13 of Table 6-15 to turn on receiver cabinet.
11. Refer to paragraph 6-6.23 for component alignment or initialization.

6-5.7 PRE-SELECT BANDPASS FILTER UD4A4 REPLACEMENT PROCEDURE.

One technician is required for this procedure.

6-5.7.1 Equipment and Tools Required.

1. Screwdriver set, Phillips-tip
2. Combination wrench set
3. Torque wrench, SMA connector.

6-5.7.2 Initial Conditions/Preliminary Setup.

**WARNING**

Failure to perform applicable shutdown steps in Table 6-13 could cause serious injury or death.

**NOTE**

Refer to paragraph 6-5.2 for special considerations for replacement procedures.

1. Perform steps 1 through 6 of Table 6-13 to shut down Receiver Cabinet UD4.
2. Open the UD4 rear cabinet door; locate and open the inner component door.

6-5.7.3 Replacement Procedure.

**CAUTION**

When removing semirigid coax from a unit, it may be necessary to loosen or remove the other end of the coax in order not to damage the unit and/or the coax.

1. Remove UD4A4J2 connector.

2. Loosen UD4DC2OUT connector located above UD4A4 using the proper wrench.
3. Remove connector UD4A4J1 from coupler.

**CAUTION**

When removing securing hardware, use a suitable holding screwdriver to prevent dropping hardware accidentally.

4. Remove mounting screws, lock washers, and flat washers securing UD4A4 to the mounting plate using proper holding screwdriver.
5. Remove defective assembly and set aside.
6. Mount new assembly using the proper screwdriver.
7. Connect J1 and J2 and tighten each connector with SMA torque wrench to 8 inch-pounds.
8. Tighten UD4DC2OUT connector using the SMA torque wrench.
9. Close and secure inner component door and cabinet door.
10. Perform step 13 of Table 6-15 to turn on receiver cabinet.
11. The following Receiver Adaptation parameter is associated with the Pre-select BP Filter:

| Parameter | Path Loss | Description | Typical Value (dB) |
|---|---|---|---|
| R81 | PL_A4 | Pre-select BP Filter input to output | -2.43 |

This path loss is compensated for in the performance of the On-line Reflectivity Calibration. It may not be necessary to perform the path loss measurement upon module replacement. To determine whether this is necessary, perform RDASOT Receiver Diagnostic Subtests 10, 12, 13, 14, 15, and 16. If any of the subtests fail, perform the R81 path loss measurement per paragraph 6-6.31 and enter the new value in the Receiver Adaptation Data per paragraph 6-6.29 .

12. Verify receiver noise floor per paragraph 6-6.24.1 . Adjust if necessary.

## 6-5.8 MIXER/PREAMP UD4A5 REPLACEMENT PROCEDURE.

One technician is required for this procedure.

### 6-5.8.1 Equipment and Tools Required.

1. Screwdriver set, Phillips-tip

2. Combination wrench set
3. Torque wrench, SMA connector.

6-5.8.2 Initial Conditions/Preliminary Setup.

**WARNING**

Failure to perform applicable shutdown steps in Table 6-13 could cause serious injury or death.

**NOTE**

Refer to paragraph 6-5.2 for special considerations for replacement procedures.

1. Perform steps 1 through 6 of Table 6-13 to shut down Receiver Cabinet UD4.
2. Open the UD4 rear cabinet door; locate and open the inner component door.

6-5.8.3 Replacement Procedure.

**CAUTION**

When removing semirigid coax from a unit, it may be necessary to loosen or remove the other end of the coax in order not to damage the unit and/or the coax.

1. Disconnect J8 after sliding the plug lock to the unlocked position.
2. Disconnect J1 through J7 using the proper wrench.

**CAUTION**

When removing securing hardware, use a suitable holding screwdriver to prevent dropping hardware accidentally.

3. Remove mounting screws, lock washers, and flat washers securing UD4A5 to the mounting plate using proper holding screwdriver.
4. Remove defective assembly and set aside.
5. Mount new assembly using the proper screwdriver.
6. Connect J1 through J7 and tighten each connector with SMA torque wrench to 8 inch-pounds.
7. Connect J8 and slide plug lock to the locked position.
8. Ensure J9 has a terminator cap installed. If not, remove terminator from defective assembly.

9. Close and secure inner component door and cabinet door.
10. Perform step 13 of Table 6-15 to turn on receiver cabinet.
11. The following five Receiver Adaptation parameters are associated with the Mixer Preamplifier.

| Parameter | Path Loss | Description | Typical Value (dB) |
|---|---|---|---|
| R83 | PL_A5J1_3 | Mixer Preamp input to output | +20.3 |
| R84 | PL_A5J1_4 | Mixer Preamp input to Guard Band Amp | +4.2 |
| R85 | PL_A5J1_5 | Mixer Preamp input to RF Test Switch J1 | -22.3 |
| R86 | PL_A5J1_7 | Mixer Preamp output to IF Test Switch J1 | -10.2 |
| R87 | PL_A5J2_6 | Mixer Preamp Stalo input to RF Test Switch J2 | -30.2 |

    a. The R83 path loss parameter is compensated for in the performance of On-line Reflectivity Calibration. It may not be necessary to perform this path loss measurement upon module replacement. To determine whether this is necessary, perform RDASOT Receiver Diagnostics Subtests 12, 13, 14, 15, and 16. If any of the subtests fail, perform the R83 path loss measurement per paragraph 6-6.31 and enter the new value per paragraph 6-6.29 .

    b. To determine whether R84 requires updating, perform Receiver Diagnostics Subtests 17 and 18. If either of these fail, perform the R84 path loss measurement per paragraph 6-6.31 and enter the new value per paragraph 6-6.29 .

    c. To determine whether R85 requires updating, perform Receiver Diagnostics Subtest 10. If it fails, perform the R85 path loss measurement per paragraph 6-6.31 and enter the new value per paragraph 6-6.29 .

    d. To determine whether R86 requires updating, perform Receiver Diagnostics Subtest 12. If it fails, perform the R86 path loss measurement per paragraph 6-6.31 and enter the new value per paragraph 6-6.29 .

    e. To determine whether R87 requires updating, perform Receiver Diagnostics Subtest 11. If it fails, perform the R87 path loss measurement per paragraph 6-6.31 and enter the new value per paragraph 6-6.29 .

12. Verify receiver noise floor per paragraph 6-6.24.1 . Adjust if necessary.

6-5.9 MATCHED BANDPASS FILTER UD4A6 REPLACEMENT PROCEDURE.

One technician is required for this procedure.

6-5.9.1 Equipment and Tools Required.

1. Screwdriver set, Phillips-tip
2. Combination wrench set
3. Torque wrench, SMA connector.

6-5.9.2 Initial Conditions/Preliminary Setup.

**WARNING**

Failure to perform applicable shutdown steps in Table 6-13 could cause serious injury or death.

**NOTE**

Refer to paragraph 6-5.2 for special considerations for replacement procedures.

1. Perform steps 1 through 6 of Table 6-13 to shut down the Receiver Cabinet UD4.
2. Open the UD4 rear cabinet door and locate the component door.

6-5.9.3 Replacement Procedure.

**CAUTION**

When disconnecting and replacing connectors, take care not to damage the plugs or the connectors.

1. Disconnect J1, J2, J3, and J4 using the proper wrench.

**CAUTION**

When removing securing hardware, use a suitable holding screwdriver to prevent dropping hardware accidentally.

2. Remove screws, lock washers, and flat washers securing UD4A6 to the inner door using the proper screwdriver.
3. Remove defective assembly and set aside.
4. Mount new assembly using the proper screwdriver.
5. Connect J1, J2, J3, and J4 and tighten each connector with SMA torque wrench to 8 inch-pounds.
6. Close and secure inner component door and cabinet door.

7. Perform step 13 of Table 6-15 to turn on receiver cabinet.

8. The following three Receiver Adaptation parameters are associated with the Matched Bandpass Filter.

| Parameter | Path Loss | Description | Typical Value (dB) |
|---|---|---|---|
| R88 | PL_A6J1_2 | Matched Filter input to output | -9.3 |
| R89 | PL_A6J1_3 | Matched Filter input to log output | -14.8 |
| R90 | PL_A6J1_4 | Matched Filter input to IF Test Switch J6 | -36.0 |

   a. The path loss for R88 is compensated for in the performance of the On-line Reflectivity Calibration. It may not be necessary to perform this path loss measurement upon module replacement. To determine whether this is necessary, perform RDASOT Receiver Diagnostics Subtests 14, 15, and 16. If any of the subtests fail, perform the R88 path loss measurement per paragraph 6-6.31 and enter the new value per paragraph 6-6.29 .

   b. To determine whether R89 requires updating, perform Receiver Diagnostics Subtest 19. If it fails, perform the R89 path loss measurement per paragraph 6-6.31 and enter the new value per paragraph 6-6.29 .

   c. To determine whether R90 requires updating, perform Receiver Diagnostics Subtest 13. If it fails, perform the R90 path loss measurement per paragraph 6-6.31 and enter the new value per paragraph 6-6.29 .

9. Verify receiver noise floor per paragraph 6-6.24.1 . Adjust if necessary.

## 6-5.10 COAX DELAY LINE UD4A7 REPLACEMENT PROCEDURE.

One technician is required for this procedure.

### 6-5.10.1 Equipment and Tools Required.

1. Screwdriver set, Phillips-tip
2. Combination wrench set
3. Torque wrench, SMA connector.

### 6-5.10.2 Initial Conditions/Preliminary Setup.

**WARNING**

Failure to perform applicable shutdown steps in Table 6-13 could cause serious injury or death.

**NOTE**

Refer to paragraph 6-5.2 for special considerations for replacement procedures.

1. Perform steps 1 through 6 of Table 6-13 to shut down Receiver Cabinet UD4.
2. Open the UD4 rear cabinet door and locate the component door.

6-5.10.3 Replacement Procedure.

**CAUTION**

When disconnecting and replacing connectors, take care not to damage the plugs or the connectors.

1. Disconnect Jl and J2 using the proper wrench.

**CAUTION**

When removing securing hardware, use a suitable holding screwdriver to prevent dropping hardware accidentally.

2. Remove mounting screws, lock washers, and flat washers securing UD4A7 to the inner door using the proper holding screwdriver.
3. Remove defective assembly and set aside.
4. Mount new assembly using the proper screwdriver.
5. Connect Jl and J2 and tighten each connector with SMA torque wrench to 8 inch-pounds.
6. Close and secure inner component door and cabinet door.
7. Perform step 13 of Table 6-15 to turn on receiver cabinet.
8. The following Receiver Adaptation parameter is associated with the Coax Delay Line.

| Parameter | Path Loss | Description | Typical Value (dB) |
|---|---|---|---|
| R91 | PL_A7 | Coax Delay Line input to output | -6.9 |

The path loss for R91 is compensated for in the performance of the On-line Reflectivity Calibration. It may not be necessary to perform this path loss measurement upon module replacement. To determine whether this is necessary, perform RDASOT Receiver Diagnostics Subtests 14, 15, and 16. If any of the

subtests fail, perform the R91 path loss measurement per paragraph 6-6.31 and enter the new value per paragraph 6-6.29 .

9. Verify receiver noise floor per paragraph 6-6.24.1 . Adjust if necessary.

6-5.1 1 IF ATTENUATOR UD4A8 REPLACEMENT PROCEDURE.

One technician is required for this procedure.

6-5.1 1.1 Equipment and Tools Required.

1. Screwdriver set, Phillips-tip
2. Combination wrench set
3. Torque wrench, SMA connector.

6-5.1 1.2 Initial Conditions/Preliminary Setup.

**WARNING**

Failure to perform applicable shutdown steps in Table 6-13 could cause serious injury or death.

**NOTE**

Refer to paragraph 6-5.2 for special considerations for replacement procedures.

1. Perform steps 1 through 6 of Table 6-13 to shut down Receiver Cabinet UD4.
2. Open the UD4 rear cabinet door and locate the component door.

6-5.1 1.3 Replacement Procedure.

**CAUTION**

When disconnecting and replacing connectors, take care not to damage the plugs or connectors.

1. Disconnect J4 and J5 after sliding the plug lock to the unlocked position.
2. Disconnect J1, J2, and J3 using the proper wrench.

**CAUTION**

When removing securing hardware, use a suitable holding screwdriver to prevent dropping hardware accidentally

3. Remove mounting screws, lock washers, and flat washers securing UD4A8 to the inner door using the proper holding screwdriver.

4. Remove defective assembly and set aside.
5. Mount new assembly using the proper screwdriver.
6. Connect J1, J2, and J3, and tighten each connector with SMA torque wrench to 8 inch-pounds.
7. Connect J4 and J5 and slide plug lock to the locked position.
8. Close and secure inner component door and cabinet door.
9. Perform step 13 of Table 6-15 to turn on receiver cabinet.
10. The following two Receiver Adaptation parameters are associated with the IF Attenuator.

| Parameter | Path Loss | Description | Typical Value (dB) |
|---|---|---|---|
| R92 | PL_A8J1_2 | IF Attenuator input to output | +0.8 |
| R93 | PL_A8J1_3 | IF Attenuator input to IF Test Switch J4 | -20.2 |

    a. The path loss for R92 is compensated for in the performance of On-line Reflectivity and IF Attenuator Calibrations. It may not be necessary to perform this path loss measurement upon module replacement. To determine whether this is necessary, perform RDASOT Receiver Diagnostics Subtests 15 and 16. If any of the subtests fail, perform the R92 path loss measurement per paragraph 6-6.31 and enter the new value per paragraph 6-6.29 .

    b. To determine whether R93 requires updating, perform RDASOT Receiver Diagnostics Subtest 14. If it fails, perform R93 path loss measurement per paragraph 6-6.31 and enter the new value per paragraph 6-6.29 .

11. Verify receiver noise floor per paragraph 6-6.24.1 . Adjust if necessary.

6-5.12 IF AMPLIFIER/LIMITER UD4A9 REPLACEMENT PROCEDURE.

One technician is required for this procedure.

6-5.12.1 Equipment and Tools Required.

1. Screwdriver set, Phillips-tip
2. Combination wrench set
3. Torque wrench, SMA connector.

6-5.12.2 Initial Conditions/Preliminary Setup.

**WARNING**

Failure to perform applicable shutdown steps in Table 6-13 could cause serious injury or death.

**NOTE**

Refer to paragraph 6-5.2 for special considerations for replacement procedures.

1. Perform steps 1 through 6 of Table 6-13 to shut down Receiver Cabinet UD4.
2. Open the UD4 rear cabinet door and locate the component door.

6-5.12.3 Replacement Procedure.

**CAUTION**

When disconnecting and replacing connectors, take care not to damage the plugs or connectors.

1. Disconnect J5 after sliding the plug lock to the unlock position.
2. Disconnect J1, J2, J3, and J4 using the proper wrench.

**CAUTION**

When removing securing hardware, use a suitable holding screwdriver to prevent dropping hardware accidentally.

3. Remove mounting screws, lock washers, and flat washers securing UD4A9 to the inner door using proper holding screwdriver.
4. Remove defective assembly and set aside.
5. Mount new assembly using the proper screwdriver.
6. Connect J1, J2, J3, and J4 and tighten each connector with SMA torque wrench to 8 inch-pounds.
7. Connect J5 and slide plug lock to the locked position.
8. Close and secure inner component door and cabinet door.
9. Perform step 13 of Table 6-15 to turn on receiver cabinet.
10. The following three Receiver Adaptation parameters are associated with the IF Amplifier/Limiter.

| Parameter | Path Loss | Description | Typical Value (dB) |
|---|---|---|---|
| R94 | PL_A9J1_2 | IF Amp/Limiter input to output | +38.8 |
| R95 | PL_A9J1_3 | IF Amp/Limiter input to IF Test Switch J2 | -22.5 |
| R96 | PL_A9J1_4 | IF Amp/Limiter input to IF Test Switch J3 | +18.0 |

a. The path loss for R94 is compensated for in the performance of the On-line Reflectivity Calibration. It may not be necessary to perform this path loss measurement upon module replacement. To determine if this is necessary, perform RDASOT Receiver Diagnostics Subtest 16. If it fails, perform the R94 path loss measurement per paragraph 6-6.31 and enter the new value per paragraph 6-6.29 .

b. To determine whether R95 requires updating, perform RDASOT Receiver Diagnostic Subtest 15. If it fails, perform R95 path loss measurement per paragraph 6-6.31 and enter the new value per paragraph 6-6.29 .

c. To determine whether R96 requires updating, perform RDASOT Receiver Diagnostics Subtests 15 and 16. If they fail, perform R96 path loss measurement per paragraph 6-6.31 and enter the new value per paragraph 6-6.29 .

11. Verify receiver noise floor per paragraph 6-6.24.1 . Adjust if necessary.

6-5.13 I/Q PHASE DETECTOR UD4A10 REPLACEMENT PROCEDURE.

One technician is required for this procedure.

6-5.13.1 Equipment and Tools Required.

1. Screwdriver set, Phillips-tip
2. Combination wrench set
3. Torque wrench, SMA connector.

6-5.13.2 Initial Conditions/Preliminary Setup.

**WARNING**

Failure to perform applicable shutdown steps in Table 6-13 could cause serious injury or death.

**NOTE**

Refer to paragraph 6-5.2 for special considerations for replacement procedures.

1. Perform steps 1 through 6 of Table 6-13 to shut down Receiver Cabinet UD4.
2. Open the UD4 rear cabinet door; locate and open the inner component door.

6-5.13.3 Replacement Procedure.

**CAUTION**

When disconnecting and replacing connectors, take care not to damage the plugs or connectors.

1. Disconnect J8 after sliding plug lock to the unlock position.
2. Disconnect Twinax BNC connectors J4 through J7.
3. Remove J1, J2, and J3 using the proper wrench.

**CAUTION**

When removing securing hardware, use a suitable holding screwdriver to prevent dropping hardware accidentally.

4. Remove mounting screws, lock washers, and flat washers securing UD4A10 to mounting plate using proper holding screwdriver.
5. Remove defective assembly and set aside.
6. Mount new assembly using proper screwdriver.
7. Connect Twinax BNC connectors J4 through J7.
8. Connect J1 through J3 and tighten each connector with SMA torque wrench to 8 inch-pounds.
9. Connect J8 and slide plug lock to the locked position.
10. Close and secure inner component door and cabinet door.
11. Perform step 13 of Table 6-15 to turn on receiver cabinet.
12. Refer to paragraphs 6-6.24.2 and 6-6.24.3 for component alignment or initialization.

6-5.14 A/D CONVERTER UD4A11 REPLACEMENT PROCEDURE.

One technician is required for this procedure.

6-5.14.1 Equipment and Tools Required.

1. Screwdriver set, flat-tip
2. Combination wrench set

6-5.14.2 Initial Conditions/Preliminary Setup.

**WARNING**

Failure to perform applicable shutdown steps in Table 6-13 could cause serious injury or death.

**NOTE**

Refer to paragraph 6-5.2 for special considerations for replacement procedures.

1. Perform steps 1 through 6 of Table 6-13 to shut down Receiver Cabinet UD4.
2. Open the UD4 rear cabinet door; locate and open the inner component door.

6-5.14.3 Replacement Procedure.

**CAUTION**

When disconnecting and replacing connectors, take care not to damage the plugs or the connectors.

1. Disconnect J4 and J5 after sliding the connector lock to the unlock position.
2. Disconnect Twinax connectors J2 and J3.
3. Disconnect twist lock SMA connector J1.
4. Untighten the four captive mounting screws that secure UD4A11 to the mounting plate using the proper screwdriver.
5. Remove defective assembly and set aside.
6. Mount new assembly using proper screwdriver.
7. Connect J1, J2, and J3.
8. Connect J4 and J5 and slide plug lock to the locked position.
9. Close and secure inner component door and cabinet door.
10. Perform step 13 of Table 6-15 to turn on receiver cabinet.
11. Perform RDASOT HSP Diagnostics Subtest 10 to check the replaced A/D Converter. Also, check the AGC Clock 2 to Track and Hold Delay adjustment procedure of paragraph 6-6.24.7.3 .

6-5.15 MULTI-OUTPUT LOG AMP DETECTOR UD4A12 REPLACEMENT PROCEDURE.

One technician is required for this procedure.

6-5.15.1 Equipment and Tools Required.

1. Screwdriver set, Phillips-tip
2. Combination wrench set
3. Torque wrench, SMA connector.

6-5.15.2 Initial Conditions/Preliminary Setup.

**WARNING**

Failure to perform applicable shutdown steps in Table 6-13 could cause serious injury or death.

**NOTE**

Refer to paragraph 6-5.2 for special considerations for replacement procedures.

1. Perform steps 1 through 6 of Table 6-13 to shut down Receiver Cabinet UD4.
2. Open the UD4 rear cabinet door and locate the component door.

6-5.15.3 Replacement Procedure.

**CAUTION**

When disconnecting and replacing connectors, take care not to damage the plugs or connectors.

1. Disconnect J1 through J6 using the proper wrench.
2. Disconnect J7 after sliding plug lock to the unlock position.

**CAUTION**

When removing securing hardware, use a suitable holding screwdriver to prevent dropping hardware accidentally.

3. Remove screws, lock washers, and flat washers securing UD4A12 to the inner door using the proper holding screwdriver.
4. Remove defective assembly and set aside.
5. Mount new assembly using the proper screwdriver.
6. Connect J1 through J6 and tighten each connector with SMA torque wrench to 8 inch-pounds.
7. Connect J7 and slide plug lock to the locked position.
8. Close and secure inner component door and cabinet door.
9. Perform step 13 of Table 6-15 to turn on receiver cabinet.
10. Perform RDASOT Receiver Diagnostics Subtest 19 to check new Log Amp Detector.

6-5.16 AGC CONTROLLER UD4A13 REPLACEMENT PROCEDURE.

One technician is required for this procedure.

6-5.16.1 Equipment and Tools Required.

1. Screwdriver set, flat-tip
2. Combination wrench set.

6-5.16.2 Initial Conditions/Preliminary Setup.

**WARNING**

Failure to perform applicable shutdown steps in Table 6-13 could cause serious injury or death.

**NOTE**

Refer to paragraph 6-5.2 for special considerations for replacement procedures.

1. Perform steps 1 through 6 of Table 6-13 to shut down Receiver Cabinet UD4.
2. Open the UD4 rear cabinet door and locate the component door.

6-5.16.3 Replacement Procedure.

**CAUTION**

When disconnecting and replacing connectors, take care not to damage the plugs or connectors.

1. Disconnect J8, J11, and J10 after sliding plug lock to the unlock position.
2. Disconnect twist lock SMA connector J9.
3. Untighten the four captive mounting screws that secure UD4A13 to the inner door using proper screwdriver.
4. Remove defective assembly and set aside.
5. Mount new assembly using proper screwdriver.
6. Connect J8, J11, and J10 and slide plug lock to the locked position.
7. Connect J9.
8. Close and secure inner component door and cabinet door.
9. Perform step 13 of Table 6-15 to turn on receiver cabinet.
10. Refer to paragraph 6-6.24.4 for component alignment or initialization.

6-5.17 GUARD BAND IF AMPLIFIER UD4A14 REPLACEMENT PROCEDURE.

One technician is required for this procedure.

6-5.17.1 Equipment and Tools Required.

1. Screwdriver set, Phillips-tip

2. Combination wrench set

3. Torque wrench, SMA connector.

6-5.17.2 Initial Conditions/Preliminary Setup.

**WARNING**

Failure to perform applicable shutdown steps in Table 6-13 could cause serious injury or death.

**NOTE**

Refer to paragraph 6-5.2 for special considerations for replacement procedures.

1. Perform steps 1 through 6 of Table 6-13 to shut down Receiver Cabinet UD4.

2. Open the UD4 rear cabinet door; locate and open the inner component door.

6-5.17.3 Replacement Procedure.

**CAUTION**

When disconnecting and replacing connectors, take care not to damage the plugs or connectors.

1. Disconnect J1 through J5 using the proper wrench.

2. Remove J6 after sliding plug lock to unlock position.

**CAUTION**

When removing securing hardware, use a suitable holding screwdriver to prevent dropping hardware accidentally.

3. Remove mounting screws, lock washers, and flat washers securing UD4A14 to the inner door using the proper holding screwdriver.

4. Remove defective assembly and set aside.

5. Mount new assembly using proper screwdriver.

6. Reconnect J6 and slide plug lock to the locked position.

7. Connect J1 through J5 and tighten each connector with SMA torque wrench to 8 inch-pounds.

8. Close and secure inner component door and cabinet door.

9. Perform step 13 of Table 6-15 to turn on receiver cabinet.

10. The following four Receiver Adaptation parameters are associated with the Guard Band IF Amplifier.

| Parameter | Path Loss | Description | Typical Value (dB) |
|---|---|---|---|
| R99 | PL_A14J1_2 | Guard Band Amp input to Guard + output | +16.0 |
| R100 | PL_A14J1_3 | Guard Band Amp input to Guard - output | +16.0 |
| R101 | PL_A14J1_4 | Guard Band Amp input to Guard + to IF Test Switch J7 | -4.0 |
| R102 | PL_A14J1_5 | Guard Band Amp input to Guard - to IF Test Switch J8 | -4.0 |

a. The path loss for R99 is compensated for in the performance of On-line Reflectivity Calibration. It may not be necessary to perform this path loss measurement upon module replacement. To determine if this is necessary, perform RDASOT Receiver Diagnostics GUARD + LOG Subtest 17. If it fails, perform the Interference Suppression Unit Alignment per paragraph 6-6.25 .

b. The path loss for R100 is compensated for in the performance of On-line Reflectivity Calibration. It may not be necessary to perform this path loss measurement upon module replacement. To determine if this is necessary, perform RDASOT Receiver Diagnostics GUARD - LOG Subtest 18. If it fails, perform the Interference Suppression Unit Alignment per paragraph 6-6.25 .

c. The path loss for R101 is compensated for in the performance of On-line Reflectivity Calibration. It may not be necessary to perform this path loss measurement upon module replacement. To determine if this is necessary, perform RDASOT Receiver Diagnostics Subtest 17. If it fails, perform the Interference Suppression Unit Alignment per paragraph 6-6.25 .

d. The path loss for R102 is compensated for in the performance of On-line Reflectivity Calibration. It may not be necessary to perform this path loss measurement upon module replacement. To determine if this is necessary, perform RDASOT Receiver Diagnostics Subtest 18. If it fails, perform the Interference Suppression Unit Alignment per paragraph 6-6.25 .

6-5.18 GUARD BAND FILTER UD4A15/A16 REPLACEMENT PROCEDURE.

One technician is required for this procedure.

6-5.18.1 Equipment and Tools Required.

1. Screwdriver set, Phillips-tip

2. Combination wrench set

3. Torque wrench, SMA connector.

6-5.18.2 Initial Conditions/Preliminary Setup.

**WARNING**

Failure to perform applicable shutdown steps in Table 6-13 could cause serious injury or death.

**NOTE**

Refer to paragraph 6-5.2 for special considerations for replacement procedures.

1. Perform steps 1 through 6 of Table 6-13 to shut down Receiver Cabinet UD4.

2. Open the UD4 rear cabinet door; locate and open the inner component door.

6-5.18.3 Replacement Procedure.

**CAUTION**

When disconnecting and replacing connectors, take care not to damage the plugs or connectors.

1. Disconnect J1, J2, and J3 using the proper wrench.

**CAUTION**

When removing securing hardware, use a suitable holding screwdriver to prevent dropping hardware accidentally.

2. Remove mounting screws, lock washers, and flat washers securing UD4A15/A16 to the inner door using the proper holding screwdriver.

3. Remove defective assembly and set aside.

4. Mount new assembly using proper screwdriver.

5. Connect J1, J2, and J3 and tighten each connector with SMA torque wrench to 8 inch-pounds.

6. Close and secure inner component door and cabinet door.

7. Perform step 13 of Table 6-15 to turn on receiver cabinet.

8. There are two Receiver Adaptation parameters associated with each of the Guard Band Filters, as follows.

| Parameter | Path Loss | Description | Typical Value (dB) |
|---|---|---|---|
| R103 | PL_A15J1_2 | +Guard Band Filter input to output | -14.8 |
| R104 | PL_A15J1_3 | +Guard Band Filter output to IF Test Switch J9 | -34.8 |
| R105 | PL_A16J1_2 | -Guard Band Filter input to output | -14.8 |
| R106 | PL_A16J1_3 | -Guard Band Filter output to IF Test Switch J10 | -34.8 |

The output test points are no longer used, so R104 and R106 never require updating.

a. To determine whether R103 requires updating, perform RDASOT Receiver Diagnostics GUARD + LOG Subtest 17. If it fails, perform the Interference Suppression Unit Alignment per paragraph 6-6.25 . Enter the new value per paragraph 6-6.29 .

b. To determine whether R105 requires updating, perform RDASOT Receiver Diagnostics GUARD - LOG Subtest 18. If it fails, perform the Interference Suppression Unit Alignment per paragraph 6-6.25 . Enter the new value per paragraph 6-6.29 .

6-5.19 MULTI-OUTPUT LOG AMP DETECTOR UD4A17/A18 REPLACEMENT PROCEDURE.

One technician is required for this procedure.

6-5.19.1 Equipment and Tools Required.

1. Screwdriver set, Phillips-tip
2. Combination wrench set
3. Torque wrench, SMA connector.

6-5.19.2 Initial Conditions/Preliminary Setup.

**WARNING**

Failure to perform applicable shutdown steps in Table 6-13 could cause serious injury or death.

**NOTE**

Refer to paragraph 6-5.2 for special considerations for replacement procedures.

1. Perform steps 1 through 6 of Table 6-13 to shut down Receiver Cabinet UD4.
2. Open the UD4 rear cabinet door; locate and open the inner component door.

6-5.19.3 Replacement Procedure.

**CAUTION**

When disconnecting and replacing connectors, take care not to damage the plugs or connectors.

1. Disconnect J7 after sliding the plug lock to the unlock position.
2. Disconnect J1, J2, and J4 using the proper wrench.
3. Remove terminators from J3, J5, and J6 using the proper wrench.

**CAUTION**

When removing securing hardware, use a suitable holding screwdriver to prevent dropping hardware accidentally.

4. Remove mounting screws, lock washers, and flat washers securing UD4A17/A18 to the inner door using the proper holding screwdriver.
5. Remove defective assembly and set aside.
6. Mount new assembly using proper screwdriver.
7. Connect J1, J2, and J4 and tighten each connector with SMA torque wrench to 8 inch-pounds.
8. Connect J7 and slide plug lock to locked position.
9. Install terminators on J3, J5, and J6 and tighten each connector with SMA torque wrench to 8 inch-pounds.
10. Close and secure inner component door and cabinet door.
11. Perform step 13 of Table 6-15 to turn on receiver cabinet.
12. Refer to paragraph 6-6.25 for component alignment or initialization.

6-5.20 INTERFERENCE DETECTOR UD4A19 REPLACEMENT PROCEDURE.

One technician is required for this procedure.

6-5.20.1 Equipment and Tools Required.

1. Screwdriver set, flat-tip

2. Combination wrench set
3. Torque wrench, SMA connector.

6-5.20.2 Initial Conditions/Preliminary Setup.

**WARNING**

Failure to perform applicable shutdown steps in Table 6-13 could cause serious injury or death.

**NOTE**

Refer to paragraph 6-5.2 for special considerations for replacement procedures.

1. Perform steps 1 through 6 of Table 6-13 to shut down Receiver Cabinet UD4.
2. Open the UD4 rear cabinet door; locate and open the inner component door.

6-5.20.3 Replacement Procedure.

**CAUTION**

When disconnecting and replacing connectors, take care not to damage the plugs or connectors.

1. Disconnect J6 and J7 after sliding the plug lock to the unlock position.
2. Disconnect coax connectors J1, J3, and J5 using the proper wrench.
3. Untighten the four captive mounting screws that secure UD4A19 to the inner door using proper screwdriver.
4. Remove defective assembly and set aside.
5. Mount new assembly using proper screwdriver.
6. Connect J1, J3, and J5 and tighten each connector with SMA torque wrench to 8 inch-pounds.
7. Connect J6 and J7 and slide plug lock to locked position.
8. Close and secure component inner door and cabinet door.
9. Perform step 13 of Table 6-15 to turn on receiver cabinet.
10. Refer to paragraph 6-6.25 for component alignment or initialization.

6-5.21 FOUR-WAY POWER DIVIDER UD4A20 REPLACEMENT PROCEDURE.

One technician is required for this procedure.

6-5.21.1 Equipment and Tools Required.

1. Screwdriver set, Phillips-tip
2. Combination wrench set
3. Torque wrench, SMA connector.

6-5.21.2 Initial Conditions/Preliminary Setup.

**WARNING**

Failure to perform applicable shutdown steps in Table 6-13 could cause serious injury or death.

**NOTE**

Refer to paragraph 6-5.2 for special considerations for replacement procedures.

1. Perform steps 1 through 6 of Table 6-13 to shut down Receiver Cabinet UD4.
2. Open the UD4 rear cabinet door; locate and open the inner component door.

6-5.21.3 Replacement Procedure.

**CAUTION**

When disconnecting and replacing connectors, take care not to damage the plugs or connectors.

1. Disconnect J1 through J4 using the proper wrench.
2. Remove terminator from J5 using the proper wrench.

**CAUTION**

When removing securing hardware, use a suitable holding screwdriver to prevent dropping hardware accidentally.

3. Remove mounting screws, lock washers, and flat washers securing UD4A20 to the mounting plate using the proper holding screwdriver.
4. Remove defective assembly and set aside.
5. Mount new assembly using the proper screwdriver.
6. Connect J1 through J4 and tighten each connector with SMA torque wrench to 8 inch-pounds.

7. Connect terminator to J5 and tighten connector with SMA torque wrench to 8 inch-pounds.
8. Close and secure inner component door and close cabinet door.
9. Perform step 13 of Table 6-15 to turn on receiver cabinet.
10. The following three Receiver Adaptation parameters are associated with the Four-Way Power Divider.

| Parameter | Path Loss | Description | Typical Value (dB) |
|---|---|---|---|
| R50 | PL_A20J1_2 | 4-way Power Divider input to UD4A34 | -6.3 |
| R51 | PL_A20J1_3 | 4-way Power Divider input to UD4A26 | -6.4 |
| R52 | PL_A20J1_4 | 4-way Power Divider input to UD4J25 | -7.2 |

    a. The R50 path loss is compensated for in the performance of On-line Reflectivity Calibration. It may not be necessary to perform this path loss measurement upon module replacement. To determine if this is necessary, perform RDASOT Receiver Diagnostics Subtest 5. If it fails, perform R50 path loss measurement per paragraph 6-6.31 and enter the new value per paragraph 6-6.29 .

    b. To determine whether R51 requires updating, bring up the RDA normally and, if any alarms are present, make a note of them. Absence of Transmitter High or Low Peak Power alarm indicates that the value of R51 does not require updating. If either of these alarms occur, perform R51 path loss measurement per paragraph 6-6.31 and enter the new value per paragraph 6-6.29 .

    c. It is not necessary to update R52 path loss upon module replacement.

6-5.22 MICROWAVE DELAY LINE UD4A21 REPLACEMENT PROCEDURE.

One technician is required for this procedure.

6-5.22.1 Equipment and Tools Required.

1. Screwdriver set, Phillips-tip
2. Combination wrench set
3. Torque wrench, SMA connector.

6-5.22.2 Initial Conditions/Preliminary Setup.

**WARNING**

Failure to perform applicable shutdown steps in Table 6-13 could cause serious injury or death.

**NOTE**

Refer to paragraph 6-5.2 for special considerations for replacement procedures.

1. Perform steps 1 through 6 of Table 6-13 to shut down Receiver Cabinet UD4.
2. Open the UD4 rear cabinet door; locate and open the inner component door.

6-5.22.3 Replacement Procedure.

**CAUTION**

When removing semirigid coax from a unit, it may be necessary to loosen or remove the other end of the coax in order not to damage the unit and/or the coax.

1. Disconnect semirigid coax W109 from UD4A21J2 and UD4A22J1 using the proper wrench.
2. Disconnect semirigid coax W118 from P2 (-40 dB attenuator) end of 4DC1 using the proper wrench.
3. Disconnect semirigid coax from UD4A21J1.

**CAUTION**

When removing securing hardware, use a suitable holding screwdriver to prevent dropping hardware accidentally.

4. Remove mounting screws, lock washers, and flat washers securing UD4A21 to the mounting plate using proper holding screwdriver.
5. Remove defective assembly and set aside.
6. Mount new assembly using proper screwdriver.
7. Connect disconnected semirigid coax reversing steps 1 through 4 and tighten each connector with SMA torque wrench to 8 inch-pounds.
8. Close and secure inner component door and cabinet door.
9. Perform step 13 of Table 6-15 to turn on receiver cabinet.
10. The following Receiver Adaptation parameter is associated with the Microwave Delay Line.

| Parameter | Path Loss | Description | Typical Value (dB) |
|---|---|---|---|
| R55 | PL_A21 | RF Delay Line input to UD4A22J1 | -46.0 |

To determine whether R55 requires updating after replacement, bring up the RDA normally, and observe whether the following alarms are present:

LIN/LOG CAL CHECK DEGRADED,
LIN/LOG CHAN CAL CHECK MAINTENANCE REQ'D,
LIN/LOG CHAN CW TEST SIG DEGRADED

If any of the above alarms exist, perform R55 path loss measurements per paragraph 6-6.31 and enter the new value per paragraph 6-6.29 .

6-5.23 FOUR POSITION RF SWITCH UD4A22 REPLACEMENT PROCEDURE.

One technician is required for this procedure.

6-5.23.1 Equipment and Tools Required.

1. Screwdriver set, flat-tip
2. Screwdriver set, Phillips-tip
3. Combination wrench set
4. Torque wrench, SMA connector.

6-5.23.2 Initial Conditions/Preliminary Setup.

**WARNING**

Failure to perform applicable shutdown steps in Table 6-13 could cause serious injury or death.

**NOTE**

Refer to paragraph 6-5.2 for special considerations for replacement procedures.

1. Perform steps 1 through 6 of Table 6-13 to shut down Receiver Cabinet UD4.
2. Open the UD4 rear cabinet door; locate and open the inner component door.

6-5.23.3 Replacement Procedure.

1. Disconnect J8 after sliding plug lock to the unlock position.

**CAUTION**

When removing semirigid coax from a unit, it may be necessary to loosen or remove the other end of the coax in order not to damage the unit and/or the coax.

2. Disconnect, in order, semirigid coax J1, J6, J2, J7, J3, and J4 using the proper wrench or fingers.
3. Loosen semirigid coax J5 using the proper wrench.
4. Remove mounting screws, lock washers, and flat washers securing UD4A22 to the mounting plate using the proper holding screwdriver.
5. Remove defective assembly and set aside.
6. Mount new assembly using the proper screwdriver.
7. Tighten semirigid coax J5 using the SMA torque wrench to 8 inch-pounds.
8. Connect remaining disconnected connectors in reverse order.
9. Close and secure inner component door and cabinet door.
10. Perform step 13 of Table 6-15 to turn on receiver cabinet.
11. Perform RIOS path loss measurement for R61 and R62 per paragraph 6-6.31.3 and Table 6-40.
12. Perform path loss measurement for R59 per paragraph 6-6.31.4 and Table 6-41. Update current adaptation data per paragraph 6-6.29 .
13. Perform RF Drive Path Calibration per paragraph 6-6.28.3.2 . Update adaptation data per paragraph 6-6.29 for new value of R56.
14. Perform Delayed Klystron Path Calibration per paragraph 6-6.28.3.5 . Update adaptation data per paragraph 6-6.29 for new value of R55.
15. Perform paragraph 6-6.28.3.3.2.3 , Noise Path Calibration.

6-5.24 RF TEST ATTENUATOR UD4A23 REPLACEMENT PROCEDURE.

One technician is required for this procedure.

6-5.24.1 Equipment and Tools Required.

1. Screwdriver set, Phillips-tip
2. Combination wrench set
3. Torque wrench, SMA connector.

6-5.24.2 Initial Conditions/Preliminary Setup.

**WARNING**

Failure to perform applicable shutdown steps in Table 6-13 could cause serious injury or death.

**NOTE**

Refer to paragraph 6-5.2 for special considerations for replacement procedures.

1. Perform steps 1 through 6 of Table 6-13 to shut down Receiver Cabinet UD4.
2. Open the UD4 rear cabinet door; locate and open the inner component door.

6-5.24.3 Replacement Procedure.

1. Disconnect J6 and J5 after sliding plug lock to the unlock position.

**CAUTION**

When removing semirigid coax from a unit, it may be necessary to loosen or remove the other end of the coax in order not to damage the unit and/or the coax.

2. Disconnect J1 through J4 using the proper wrench.

**CAUTION**

When removing securing hardware, use a suitable holding screwdriver to prevent dropping hardware accidentally.

3. Remove mounting screws, lock washers, and flat washers securing UD4A23 to mounting plate using the proper screwdriver.
4. Remove defective assembly and set aside.

5. Mount new assembly using the proper screwdriver.
6. Connect J1, J2, J3, and J4 using SMA torque wrench and tighten to 8 inch-pounds.
7. Tighten any other loosened semirigid coax using SMA torque wrench.
8. Connect J5 and J6 and slide plug lock to the locked position.
9. Close and secure inner component door and cabinet door.
10. Perform step 13 of Table 6-15 to turn on receiver cabinet.
11. Perform paragraph 6-6.28.3.4 to calibrate Receiver Adaptation parameters associated with the RF Test Attenuator UD4A23.
12. Perform the path loss measurement for R63 per Table 6-41 and paragraph 6-6.31.4 . Correct current adaptation data per paragraph 6-6.29 .

6-5.25 TWO POSITION RF SWITCH UD4A24 REPLACEMENT PROCEDURE.

One technician is required for this procedure.

6-5.25.1 Equipment and Tools Required.

1. Screwdriver set, flat-tip
2. Screwdriver set, Phillips-tip
3. Combination wrench set
4. Torque wrench, SMA connector.

6-5.25.2 Initial Conditions/Preliminary Setup.

**WARNING**

Failure to perform applicable shutdown steps in Table 6-13 could cause serious injury or death.

**NOTE**

Refer to paragraph 6-5.2 for special considerations for replacement procedures.

1. Perform steps 1 through 6 of Table 6-13 to shut down Receiver Cabinet UD4.
2. Open the UD4 rear cabinet door; locate and open the inner component door.

6-5.25.3 Replacement Procedure.

**CAUTION**

When removing semirigid coax from a unit, it may be necessary to loosen or remove the other end of the coax in order not to damage the unit and/or the coax.

1. Disconnect coax from J3 using the proper wrench.
2. Disconnect coax from J1, J2, and J4 using the proper wrench.
3. Disconnect J5 after sliding plug lock to the unlocked position.

**CAUTION**

When removing securing hardware, use a suitable holding screwdriver to prevent dropping hardware accidentally.

4. Remove mounting screws, lock washers, and flat washers securing UD4A24 to the mounting plate using the proper holding screwdriver.
5. Remove defective assembly and set aside.
6. Mount new assembly using the proper screwdriver.
7. Connect coax J1, J2, and J4 and tighten each connector with SMA torque wrench to 8 inch-pounds.
8. Connect coax J3 and tighten connector with SMA torque wrench to 8 inch-pounds.
9. Connect J5 and slide plug lock to the locked position.
10. Close and secure inner component door and cabinet door.
11. Perform step 13 of Table 6-15 to turn on receiver cabinet.
12. Perform the path loss measurement for R66 per Table 6-41 and paragraph 6-6.31.4 and correct current adaptation data per paragraph 6-6.29 .
13. Perform path loss measurement for R67 per Table 6-39 and paragraph 6-6.31.2 and correct current adaptation data per paragraph 6-6.29 .
14. Perform RIOS path loss measurement for R68 per Table 6-40 and paragraph 6-6.31.3 and correct adaptation data per paragraph 6-6.29 .

6-5.26 RF NOISE SOURCE UD4A25 REPLACEMENT PROCEDURE.

One technician is required for this procedure.

6-5.26.1 Equipment and Tools Required.

1. Screwdriver set, flat-tip
2. Screwdriver set, Phillips-tip
3. Combination wrench set
4. Torque wrench, SMA connector.

6-5.26.2 Initial Conditions/Preliminary Setup.

**WARNING**

Failure to perform applicable shutdown steps in Table 6-13 could cause serious injury or death.

**NOTE**

Refer to paragraph 6-5.2 for special considerations for replacement procedures.

1. Perform steps 1 through 6 of Table 6-13 to shut down Receiver Cabinet UD4.
2. Open the UD4 rear cabinet door; locate and open the inner component door.

6-5.26.3 Replacement Procedure.

1. Remove J2 after sliding plug lock to the unlocked position.

**CAUTION**

When removing semirigid coax from a unit, it may be necessary to loosen or remove the other end of the coax in order not to damage the unit and/or the coax.

2. Disconnect coax J1 using the proper wrench.

**CAUTION**

When removing securing hardware, use a suitable holding screwdriver to prevent dropping hardware accidentally.

3. Remove mounting screws, lock washers, and flat washers securing UD4A25 to the mounting plate using the proper holding screwdriver.
4. Remove defective assembly and set aside.
5. Mount new assembly using the proper screwdriver.
6. Connect J2 and slide plug lock to the locked position.
7. Connect and tighten semirigid coax J1 using SMA torque wrench to 8 inch-pounds.
8. Close and secure inner component door and cabinet doors.
9. Perform step 13 of Table 6-15 to turn on receiver cabinet.
10. The following Receiver Adaptation parameter is associated with the RF Noise Source.

| Parameter | Path Loss | Description | Typical Value (dB) |
|---|---|---|---|
| R35 | TS Noise | RF Noise Test Signal | +62.0 |

To update the value of R35 as a result of replacing the RF Noise Source 4A25, perform paragraph 6-6.28.3.3.2.4 , Noise Source Calibration and update Receiver Adaptation data per paragraph 6-6.29 .

6-5.27 POWER MONITOR UD4A26 REPLACEMENT PROCEDURE.

One technician is required for this procedure.

6-5.27.1 Equipment and Tools Required.

1. Screwdriver set, flat-tip
2. Screwdriver set, Phillips-tip
3. Combination wrench set.

6-5.27.2 Initial Conditions/Preliminary Setup.

**WARNING**

Failure to perform applicable shutdown steps in Table 6-13 could cause serious injury or death.

**NOTE**

Refer to paragraph 6-5.2 for special considerations for replacement procedures.

1. Perform steps 1 through 6 of Table 6-13 to shut down Receiver Cabinet UD4.
2. At the RDA Maintenance Panel UD5A2, set the DAU power switch to **OFF**.
3. Open the UD4 rear cabinet door; locate and open the inner component door.

6-5.27.3 Replacement Procedure.

1. Disconnect J2.
2. Disconnect J1.

**CAUTION**

When removing securing hardware, use a suitable holding screwdriver to prevent dropping hardware accidentally.

3. Remove mounting screws, lock washer, and flat washers securing UD4A26 to the mounting plate using the proper holding screwdriver.
4. Remove defective assembly and set aside.
5. Mount new assembly using the proper screwdriver.
6. Connect J1 and J2.
7. Close and secure inner component door and cabinet door.
8. Perform step 13 of Table 6-15 to turn on receiver cabinet.
9. At the RDA Maintenance Panel UD5A2, set the DAU power switch to **ON**.
10. Refer to paragraph 6-6.28.1.3 for component alignment or initialization.

6-5.28 MULTI-POSITION RF SELECT SWITCH UD4A27 REPLACEMENT PROCEDURE.

One technician is required for this procedure.

6-5.28.1 Equipment and Tools Required.

1. Screwdriver set, flat-tip
2. Screwdriver set, Phillips-tip
3. Combination wrench set
4. Torque wrench, SMA connector.

6-5.28.2 Initial Conditions/Preliminary Setup.

**WARNING**

Failure to perform applicable shutdown steps in Table 6-13 could cause serious injury or death.

**NOTE**

Refer to paragraph 6-5.2 for special considerations for replacement procedures.

1. Perform steps 1 through 6 of Table 6-13 to shut down Receiver Cabinet UD4.
2. Open the UD4 rear cabinet door; locate and open the inner component door.

6-5.28.3 Replacement Procedure.

1. Disconnect J11 from bottom of unit.

**CAUTION**

When removing semirigid coax from a unit, it may be necessary to loosen or remove the other end of the coax in order not to damage the unit and/or the coax.

2. Disconnect coax from Jl through J8 and COM using the proper wrench.

**CAUTION**

When removing securing hardware, use a suitable holding screwdriver to prevent dropping hardware accidentally.

3. Remove mounting screws, lock washers, and flat washers securing UD4A27 to the mounting plate using the proper holding screwdriver.
4. Remove defective assembly and set aside.
5. Mount new assembly using the proper screwdriver.
6. Connect coax connectors COM and J1 through J8. Tighten each connector with the SMA torque wrench to 8 inch-pounds.
7. Reconnect J11 at bottom of unit.
8. Close and secure inner component door and cabinet door.
9. Perform step 13 of Table 6-15 to turn on receiver cabinet.
10. The following Receiver Adaptation parameter is associated with the Multi-Position RF Select Switch.

| Parameter | Path Loss | Description | Typical Value (dB) |
|---|---|---|---|
| R107 | PL_A27 | RF Select Switch | -0.5 |

This parameter requires updating upon replacement of the RF Selector Switch. Perform the RIOS Path Loss Measurement procedure of paragraph 6-6.31.3 and Table 6-40 and update Receiver Adaptation Data per paragraph 6-6.29 .

6-5.29 MULTI-POSITION IF SELECT SWITCH UD4A28 REPLACEMENT PROCEDURE.

One technician is required for this procedure.

6-5.29.1 Equipment and Tools Required.

1. Screwdriver set, flat-tip
2. Screwdriver set, Phillips-tip

3. Combination wrench set
4. Torque wrench, SMA connector.

6-5.29.2 Initial Conditions/Preliminary Setup.

**WARNING**

Failure to perform applicable shutdown steps in Table 6-13 could cause serious injury or death.

**NOTE**

Refer to paragraph 6-5.2 for special considerations for replacement procedures.

1. Perform steps 1 through 6 of Table 6-13 to shut down Receiver Cabinet UD4.
2. Open the UD4 rear cabinet door; locate and open the inner component door.

6-5.29.3 Replacement Procedure.

1. Disconnect J11 from bottom of unit.
2. Disconnect coax from Jl through J10 and COM using the proper wrench.

**CAUTION**

When removing securing hardware, use a suitable holding screwdriver to prevent dropping hardware accidentally.

3. Remove mounting screws, lock and flat washers using the proper holding screwdriver.
4. Remove defective assembly and set aside.
5. Mount new assembly with the proper screwdriver.
6. Connect coax connectors J1 through J10 and COM. Tighten each connector with SMA torque wrench to 8 inch-pounds.
7. Reconnect J11 at bottom of unit.
8. Close and secure inner component door and cabinet door.
9. Perform step 13 of Table 6-15 to turn on receiver cabinet.
10. The following Receiver Adaptation parameter is associated with the Multi-Position IF Select Switch.

| Parameter | Path Loss | Description | Typical Value (dB) |
|---|---|---|---|
| R108 | PL_A28 | IF Select Switch | -0.5 |

This parameter requires updating upon replacement of the IF Selector Switch. Perform the RIOS Path Loss Measurement procedure of paragraph 6-6.31.3 and Table 6-40 and update Receiver Adaptation Data per paragraph 6-6.29 .

6-5.30 RF LOG AMPLIFIER/DETECTOR UD4A29 REPLACEMENT PROCEDURE.

One technician is required for this procedure.

6-5.30.1 Equipment and Tools Required.

1. Screwdriver set, flat-tip
2. Screwdriver set, Phillips-tip
3. Combination wrench set
4. Torque wrench, SMA connector.

6-5.30.2 Initial Conditions/Preliminary Setup.

**WARNING**

Failure to perform applicable shutdown steps in Table 6-13 could cause serious injury or death.

**NOTE**

Refer to paragraph 6-5.2 for special considerations for replacement procedures.

1. Perform steps 1 through 6 of Table 6-13 to shut down Receiver Cabinet UD4.
2. Open the UD4 rear cabinet door; locate and open the inner component door.

6-5.30.3 Replacement Procedure.

1. Disconnect J3 after sliding plug lock to the unlocked position.

**CAUTION**

When removing semirigid coax from a unit, it may be necessary to loosen or remove the other end of the coax in order not to damage the unit and/or the coax.

2. Disconnect semirigid coax J1 and J2 using the proper wrench.

**CAUTION**

When removing securing hardware, use a suitable holding screwdriver to prevent dropping hardware accidentally.

3. Remove mounting screws, lock washers, and flat washers securing UD4A29 to the mounting plate using the proper holding screwdriver.
4. Remove defective assembly and set aside.
5. Mount new assembly using the proper screwdriver.
6. Connect and tighten J1 and J2 using the SMA torque wrench to 8 inch-pounds.
7. Connect J3 and slide plug lock to the locked position.
8. Close and secure inner component door and cabinet door.
9. Perform step 13 of Table 6-15 to turn on receiver cabinet.

6-5.31 IF LOG AMPLIFIER/DETECTOR UD4A30 REPLACEMENT PROCEDURE.

One technician is required for this procedure.

6-5.31.1 Equipment and Tools Required.

1. Screwdriver set, flat-tip
2. Screwdriver set, Phillips-tip
3. Combination wrench set
4. Torque wrench, SMA connector.

6-5.31.2 Initial Conditions/Preliminary Setup.

**WARNING**

Failure to perform applicable shutdown steps in Table 6-13 could cause serious injury or death.

**NOTE**

Refer to paragraph 6-5.2 for special considerations for replacement procedures.

1. Perform steps 1 through 6 of Table 6-13 to shut down Receiver Cabinet UD4.
2. Open the UD4 rear cabinet door; locate and open the inner component door.

6-5.31.3 Replacement Procedure.

1. Remove J3 after sliding plug lock to the unlocked position.
2. Remove coax connectors J1 and J2 using the proper wrench.

**CAUTION**

When removing securing hardware, use a suitable holding screwdriver to prevent dropping hardware accidentally.

3. Remove mounting bracket screws, lock washers, and flat washers securing UD4A30 to the inner door using the proper holding screwdriver.
4. Remove UD4A30 assembly from mounting bracket using the proper screwdriver.
5. Mount new UD4A30 assembly to mounting bracket using the proper screwdriver.
6. Install mounting bracket assembly using the proper screwdriver.
7. Connect and tighten J1 and J2 using the SMA torque wrench to 8 inch-pounds.
8. Connect J3 and slide plug lock to the locked position.
9. Close and secure inner component door and close cabinet door.
10. Perform step 13 of Table 6-15 to turn on receiver.

6-5.32 RF/IF TEST MONITOR UD4A31 REPLACEMENT PROCEDURE.

One technician is required for this procedure.

6-5.32.1 Equipment and Tools Required.

1. Screwdriver set, flat-tip
2. Screwdriver set, Phillips-tip
3. Combination wrench set
4. Torque wrench, SMA connector.

6-5.32.2 Initial Conditions/Preliminary Setup.

**WARNING**

Failure to perform applicable shutdown steps in Table 6-13 could cause serious injury or death.

**NOTE**

Refer to paragraph 6-5.2 for special considerations for replacement procedures.

1. Perform steps 1 through 6 of Table 6-13 to shut down Receiver Cabinet UD4.
2. Open the UD4 rear cabinet door; locate and open the inner component door.

6-5.32.3 Replacement Procedure.

1. Disconnect J3, J2, and J1 using the proper screwdriver.

**CAUTION**

When disconnecting and replacing connectors, take care not to damage the plugs or the connectors.

2. Disconnect J9 by hand.
3. Disconnect J4, J6, J7, J8, and J5 using the proper wrench.
4. Untighten the four captive mounting screws that secure UD4A31 to the inner door using proper screwdriver.
5. Remove defective assembly and set aside.
6. Mount new assembly using the proper screwdriver.
7. Connect J5, J6, J7, J8, and J4 and tighten each connector with SMA torque wrench to 8 inch-pounds.
8. Connect J1, J2, and J3 using the proper screwdriver.
9. Connect J9 by hand.
10. Close and secure inner component door and cabinet door.
11. Perform step 13 in Table 6-15 to turn on receiver cabinet.
12. The following five Receiver Adaptation parameters are associated with the RF/IF Test Monitor Selector Switch.

| Parameter | Path Loss | Description | Typical Value (dB) |
|---|---|---|---|
| R109 | PL_A31A | A31J6_9 Test Monitor | +2.7 |
| R110 | PL_A31B | A31J8_9 Test Monitor | +0.713 |
| R111 | PL_A31C | A31J7_9 Test Monitor | +0.713 |
| R112 | PL_A31D | A31J4_9 Test Monitor | +0.754 |
| R113 | PL_A31E | A31J5_9 Test Monitor | +0.700 |

To check whether these parameters require updating after replacement, perform RDASOT Receiver Diagnostics. If any of the subtests fail, perform the path loss measurement per paragraph 6-6.31 and update the Adaptation parameters per paragraph 6-6.29 .

6-5.33 RECEIVER INTERFACE UD4A32 REPLACEMENT PROCEDURE.

One technician is required for this procedure.

6-5.33.1 Equipment and Tools Required.

1. Screwdriver set, flat-tip
2. Screwdriver set, Phillips-tip.

6-5.33.2 Initial Conditions/Preliminary Setup.

**WARNING**

Failure to perform applicable shutdown steps in Table 6-13 could cause serious injury or death.

**NOTE**

Refer to paragraph 6-5.2 for special considerations for replacement procedures.

1. Perform steps 1 through 6 of Table 6-13 to shut down Receiver Cabinet UD4.
2. Open the UD4 rear cabinet door; locate and open the inner component door.

6-5.33.3 Replacement Procedure.

1. Disconnect J1 through J13 using the proper screwdriver.
2. Untighten the four captive mounting screws that secure UD4A32 to the inner door using the proper screwdriver.
3. Remove defective assembly and set aside.
4. Mount new assembly using the proper screwdriver.
5. Connect J1 through J13 using the proper screwdriver.
6. Close and secure inner component door and cabinet door.
7. Perform step 13 of Table 6-15 to turn on receiver cabinet.

6-5.34 6 DB ATTENUATOR PAD UD4A33 REPLACEMENT PROCEDURE.

One technician is required for this procedure.

6-5.34.1 Equipment and Tools Required.

1. Screwdriver set, flat-tip
2. Combination wrench set
3. Torque wrench, SMA connector.

6-5.34.2 Initial Conditions/Preliminary Setup.

**WARNING**

Failure to perform applicable shutdown steps in Table 6-13 could cause serious injury or death.

**NOTE**

Refer to paragraph 6-5.2 for special considerations for replacement procedures.

1. Perform steps 1 through 6 of Table 6-13 to shut down Receiver Cabinet UD4.
2. Open the UD4 rear cabinet door; locate and open the inner component door.

6-5.34.3 Replacement Procedure.

1. Disconnect 6 dB attenuator from J1 of 4-Way Power Splitter UD4A20 using the proper wrench.
2. Disconnect other side of 6 dB attenuator from coax that goes to J18 and set attenuator aside.
3. Connect 6 dB attenuator to coax that goes to J18 and tighten with SMA torque wrench to 8 inch-pounds.
4. Connect 6 dB attenuator to UD4A20J1 and tighten with SMA torque wrench to 8 inch-pounds.
5. Close and secure inner component door and cabinet door.
6. Perform step 13 of Table 6-15 to turn on receiver cabinet.
7. The following Receiver Adaptation parameter is associated with the 6 dB Attenuator Pad A33.

| Parameter | Path Loss | Description | Typical Value (dB) |
|---|---|---|---|
| R49 | PL_A33PAD | 6 dB PAD | -5.8 |

To determine whether R49 requires updating after replacement, bring up the RDA to normal, and observe whether the following alarms are present:

"LIN/LOG CAL CHECK DEGRADED,
LIN/LOG CHAN CW TEST SIGNAL DEGRADED,
LIN/LOG CHAN GAIN CAL CHECK MAINTENANCE REQ'D"

If any of these alarms occur, perform R49 path loss measurements per paragraph 6-6.31 and update R49 per paragraph 6-6.29 .

6-5.35 10 DB ATTENUATOR PAD UD4A34 REPLACEMENT PROCEDURE.

One technician is required for this procedure.

6-5.35.1 Equipment and Tools Required.

1. Combination wrench set
2. Torque wrench, SMA connector.

6-5.35.2 Initial Conditions/Preliminary Setup.

**WARNING**

Failure to perform applicable shutdown steps in Table 6-13 could cause serious injury or death.

**NOTE**

Refer to paragraph 6-5.2 for special considerations for replacement procedures.

1. Perform steps 1 through 6 of Table 6-13 to shut down Receiver Cabinet UD4.
2. Open the UD4 rear cabinet door; locate and open the inner component door.

6-5.35.3 Replacement Procedure.

1. Remove the coax connector from J2 of 4-Way Power Splitter UD4A20 using the proper wrench.
2. Remove the 10 dB attenuator from Directional Coupler UD4DC1 using the proper wrench.
3. Remove assembly and set aside.
4. Connect new attenuator to UD4A20J2 and tighten connector with SMA torque wrench to 8 inch-pounds.
5. Connect other side of attenuator to UD4DC1 and tighten connector with SMA torque wrench to 8 inch-pounds.
6. Close and secure inner component door and cabinet door.
7. Perform step 13 of Table 6-15 to turn on receiver cabinet.
8. The following Receiver Adaptation parameter is associated with the 10 dB Attenuator Pad A34.

| Parameter | Path Loss | Description | Typical Value (dB) |
|---|---|---|---|
| R53 | PL_A34PAD | 10 dB PAD | -10.0 |

To determine whether R53 requires updating after replacement, bring up the RDA to normal, and observe whether the following alarms are present:

"LIN/LOG CAL CHECK DEGRADED,
LIN/LOG CHAN CAL CHECK MAINTENANCE REQ'D
LIN/LOG CHAN CW TEST SIG DEGRADED"

If any of these alarms occur, perform R53 path loss measurements per paragraph 6-6.31 and update R53 per paragraph 6-6.29 .

6-5.36 FIXED ATTENUATOR UD4A36 REPLACEMENT PROCEDURE.

One technician is required for this procedure.

6-5.36.1 Equipment and Tools Required.

1. Screwdriver set, flat-tip

2. Screwdriver set, Phillips-tip
3. Combination wrench set
4. Torque wrench, SMA connector.

6-5.36.2 Initial Conditions/Preliminary Setup.

**WARNING**

Failure to perform applicable shutdown steps in Table 6-13 could cause serious injury or death.

**NOTE**

Refer to paragraph 6-5.2 for special considerations for replacement procedures.

1. Perform steps 1 through 6 of Table 6-13 to shut down Receiver Cabinet UD4.
2. Open the UD4 rear cabinet door; locate and open the inner component door.

6-5.36.3 Replacement Procedure.

1. Remove the attenuator from Directional Coupler UD4DC2 using the proper wrench.
2. Remove the coax connector going to J15 using the proper wrench.
3. Remove defective assembly and set aside.
4. Connect new assembly to UD4DC2 observing correct polarity and tighten.
5. Connect J15 to attenuator and tighten each connector with SMA torque wrench to 8 inch-pounds.
6. Close and secure inner component door and cabinet door.
7. Perform step 13 of Table 6-15 to turn on receiver cabinet.

6-5.37 RECEIVER CABINET BLOWERS UD4B1, UD4B2 REPLACEMENT PROCEDURE.

One technician is required for this procedure.

6-5.37.1 Equipment and Tools Required.

1. Screwdriver set, flat-tip
2. Screwdriver set, Phillips-tip
3. Stepladder, 6-foot
4. Adjustable wrench set.

6-5.37.2 Initial Conditions/Preliminary Setup.

**WARNING**

Failure to perform applicable shutdown steps in Table 6-13 could cause serious injury or death.

**NOTE**

Refer to paragraph 6-5.2 for special considerations for replacement procedures.

1. Perform steps 1 through 6 of Table 6-13 to shut down Receiver Cabinet UD4.
2. Open the UD4 rear cabinet door; locate and open the inner component door.

6-5.37.3 Replacement Procedure.

1. Locate the defective blower fan at top of cabinet.

**CAUTION**

When removing securing hardware, use a suitable holding screwdriver to prevent dropping hardware accidentally.

2. Remove ground screws and washers from the defective blower using the proper holding screwdriver.
3. Disconnect power lugs from blower motor.
4. Remove filter mounting screws and washers from cabinet filter on the outside top of the cabinet using the proper screwdriver and wrench.
5. Remove blower filter from top of cabinet.

**CAUTION**

Take care not to drop nuts and/or washers when removing filter or fan.

6. Remove screws, washers, and nuts from cabinet blower using the proper screwdriver.
7. Remove the screws, washers, and nuts holding the blower protective cover using the proper screwdriver.
8. Reverse steps 2 through 7 to install blowers.
9. Perform step 13 of Table 6-15 to turn on receiver cabinet.

6-5.38 PLUG-IN FREQUENCY UNIT UD4A1A1 REPLACEMENT PROCEDURE.

One technician is required for this procedure.

6-5.38.1 Equipment and Tools Required.

1. Screwdriver set, flat-tip
2. Open-end wrench set
3. Torque wrench, SMA connector.

6-5.38.2 Initial Conditions/Preliminary Setup.

**WARNING**

Failure to perform applicable shutdown steps in Table 6-13 could cause serious injury or death.

**NOTE**

Refer to paragraph 6-5.2 for special considerations for replacement procedures.

1. Perform steps 1 through 6 of Table 6-13 to shut down Receiver Cabinet UD4.
2. Open the UD4 rear cabinet door; locate and open the inner component door.

6-5.38.3 Replacement Procedure.

1. Remove access plate on RF Frequency Generator UD4A1.
2. Disconnect 9-pin connector and 4 SMA connectors on frequency unit UD4A1A1.
3. Loosen the captive screws connecting the frequency unit to the RF frequency generator using the proper screwdriver.
4. Using both hands, carefully pull frequency unit straight out until the frequency unit is clear of the frequency generator.
5. Set defective unit aside.
6. To install a new unit, reverse steps 1 through 3.
7. Perform step 13 of Table 6-15 to turn on receiver cabinet.

6-5.39 40 DB DIRECTIONAL COUPLER UD4DC1 REPLACEMENT PROCEDURE.

One technician is required for this procedure.

6-5.39.1 Equipment and Tools Required.

1. Screwdriver set, flat-tip

2. Combination wrench set
3. Torque wrench, SMA connector.

6-5.39.2 Initial Conditions/Preliminary Setup.

**WARNING**

Failure to perform applicable shutdown steps in Table 6-13 could cause serious injury or death.

**NOTE**

Refer to paragraph 6-5.2 for special considerations for replacement procedures.

1. Perform steps 1 through 6 of Table 6-13 to shut down Receiver Cabinet UD4.
2. Open the UD4 rear cabinet door; locate and open the inner component door.

6-5.39.3 Replacement Procedure.

**CAUTION**

When disconnecting and replacing connectors, take care not to damage the plugs or connectors.

When removing semirigid coax from a unit, it may be necessary to loosen or remove the other end of the coax in order not to damage the unit and/or the coax.

1. Remove the connection from the left side of UD4DC1 using the proper wrench.
2. While holding UD4DC1, remove the top connection to the 10 dB attenuator using the proper wrench. Tag connection.
3. Note the faulty UD4DC1 polarity.
4. While supporting UD4DC1, remove the junction connection from the bottom of UD4DC1 (top of UD4A21) using the proper wrench. Set faulty unit aside.
5. To install new unit, reverse steps 1 through 4, using the SMA torque wrench to tighten each connector to 8 inch-pounds.
6. Perform step 13 of Table 6-15 to turn on receiver cabinet.
7. The following Receiver Adaptation parameter is associated with the 40 dB Directional Coupler UD4DC1.

| Parameter | Path Loss | Description | Typical Value (dB) |
|---|---|---|---|
| R54 | PL_4DC1 | Direct Coupler DC1 | -40.0 |

To determine whether R54 requires updating after replacement, perform RDASOT Receiver Diagnostics Subtest 5. If it fails, perform R54 path loss measurement per paragraph 6-6.31 and update R54 per paragraph 6-6.29 .

6-5.40 20 DB DIRECTIONAL COUPLER UD4DC2 REPLACEMENT PROCEDURE.

One technician is required for this procedure.

6-5.40.1 Equipment and Tools Required.

1. Screwdriver set, flat-tip
2. Screwdriver set, Phillips-tip
3. Combination wrench set
4. Torque wrench, SMA connector.

6-5.40.2 Initial Conditions/Preliminary Setup.

**WARNING**

Failure to perform applicable shutdown steps in Table 6-13 could cause serious injury or death.

**NOTE**

Refer to paragraph 6-5.2 for special considerations for replacement procedures.

1. Perform steps 1 through 6 of Table 6-13 to shut down Receiver Cabinet UD4.
2. Open the UD4 rear cabinet door; locate and open the inner component door.

6-5.40.3 Replacement Procedure.

**CAUTIONS**

When disconnecting and replacing connectors, take care not to damage the plugs or connectors.

When removing semirigid coax from a unit, it may be necessary to loosen or remove the other end of the coax in order not to damage the unit and/or the coax.

1. Remove the semirigid coax from J2 (side) of UD4DC2 using the proper wrench.
2. Remove the junction to the attenuator from the top of UD4DC2 using the proper wrench.

3. Loosen the junction (bottom) from UD4A4 to UD4DC2 using the proper wrench.

**CAUTION**

When removing securing hardware, use a suitable holding screwdriver to prevent dropping hardware accidentally.

4. Remove the screws and washers holding the UD4DC2 bracket to the RF mounting plate using the proper holding screwdriver.
5. Remove UD4DC2 from the UD4A4 junction and take UD4DC2 and bracket to bench.
6. Remove the screws, nuts, and washers from the bracket using the proper wrench and screwdriver.
7. Set defective unit aside.
8. Reverse steps 1 through 6 to reassemble using the SMA torque wrench to tighten each connection to 8 inch-pounds.
9. Close and secure inner component door and cabinet door.
10. Perform step 13 of Table 6-15 to turn on receiver cabinet.
11. The following Receiver Adaptation parameter is associated with the 20 dB Directional Coupler UD4DC2.

| Parameter | Path Loss | Description | Typical Value (dB) |
|---|---|---|---|
| R80 | PL_A4DC2 | 20 dB Coupler | -19.5 |

To check whether R80 requires updating after replacement, perform RDASOT Receiver Diagnostics Subtests 10, 12, 13, and 14. If it fails, perform R80 path loss measurement per paragraph 6-6.31 and update R80 per paragraph 6-6.29 .

6-5.41 DAU CONTROLLER MODULE UD5A3A1 AND ANALOG PROCESSOR MODULE UD5A3A2 REPLACEMENT PROCEDURE.

One technician is required for this procedure.

6-5.41.1 Equipment and Tools Required.

1. Screwdriver set, flat-tip
2. ESD wrist strap with clip lead
3. ESD conductive mat.

6-5.41.2 Initial Conditions/Preliminary Setup.

**WARNING**

Failure to perform applicable shutdown steps in Table 6-13 could cause serious injury or death.

**NOTE**

Refer to paragraph 6-5.2 for special considerations for replacement procedures.

1. Open the left front UD5 cabinet door and locate Maintenance Panel UD5A2.
2. Perform steps 1 through 5 and 22 of Table 6-13 to shut down DAU.

6-5.41.3 Replacement Procedure.

**ESD** **CAUTION** **ESD**

All WSR-88D printed circuit cards are electrostatic sensitive devices which require special handling. Refer to paragraph 6-5.2.6 .

1. Put ESD wrist strap on and attach clip lead to cabinet chassis.
2. Gain access to the DAU by loosening the screw on the left side of the maintenance panel. Swing maintenance panel open.
3. At DAU Rack Assembly UD5A3, remove faulty card from assembly and place on ESD conductive mat.
4. Remove new card from conductive wrapping and verify part number.
5. Reverse steps 1 through 3 for installation.
6. At the RDA Maintenance Panel UD5A2, set the DAU power switch to **ON**.
7. At the RDA System Console, enter **RDAUP<Return>** to bring up the applications software.
8. Access the Applications Terminal by **simultaneously** pressing the **<Shift>** and **<Port>** keys.
9. At the Applications Terminal command and parameter lines, enter **DIPD<Tab>XMT <Return>**.
10. Perform power monitor alignment per paragraph 6-6.27 .

6-5.42 DCU ANALOG CARD UD5A6A1 REPLACEMENT PROCEDURE.

One technician is required for this procedure.

6-5.42.1 Equipment and Tools Required.

1. Screwdriver set, Phillips-tip
2. ESD wrist strap with clip lead
3. ESD static protective bag
4. Watch, stop.

6-5.42.2 Initial Conditions/Preliminary Setup.

**WARNING**

Failure to perform applicable shutdown steps in Table 6-13 could cause serious injury or death.

**NOTE**

Refer to paragraph 6-5.2 for special considerations for replacement procedures.

1. Open the left front and right rear UD5 cabinet doors and locate the Digital Control Unit UD5A6.
2. Perform steps 1 through 5 and 13 through 15 of Table 6-13 to shut down pedestal electronics.

6-5.42.3 Replacement Procedure.

**ESD** **CAUTION** **ESD**

All WSR-88D printed circuit cards are electrostatic sensitive devices which require special handling. Refer to paragraph 6-5.2.6 .

1. Put ESD wrist strap on and attach clip lead to cabinet chassis.
2. At cabinet rear, remove P1 from J2 on the Digital Control Unit.
3. At the front of the Digital Control Unit, remove the eight mounting screws using the proper screwdriver.

**CAUTION**

Unit is heavy. Do not attempt to force unit beyond slide stops.

4. Pull slide-mounted unit forward until slide stops engage.
5. Remove the 15 screws attaching the top cover to the chassis using the proper screwdriver and set cover aside.

6. Remove ribbon cables P5 and P6 by lifting them up.

7. Remove wire cable P7 by lifting it up.

**CAUTION**

When removing securing hardware, use a suitable holding screwdriver to prevent dropping hardware accidentally.

8. Remove analog card mounting screws using the proper holding screwdriver.

9. Remove card stabilizer bar friction screw (side of analog card).

10. Remove defective analog circuit card and place in ESD static protective bag.

11. Reverse steps 1 through 9 for installation.

12. Perform steps 6, 7, and 17 of Table 6-15 to turn on pedestal electronics.

13. There are twelve adjustments on the Pedestal Analog card. Four of these are factory set and never need adjustment at the organizational site level. Adjustment procedures for the other eight are contained in paragraph 6-6.30. In order to determine whether these adjustments are required upon Analog Card UD5A6A1 replacement, perform the following test:

    a. At the RDA System Console, enter **RDADP<Return>** to bring up the applications software.

    b. Access the Applications Terminal by **simultaneously** pressing the **<Shift>** and **<Port>** keys.

    c. At the Applications Terminal command and parameter lines, enter **SELP<Tab>11<Return>**. Then enter **OPER<Return>** to start the Volume Scan in VCP11.

    d. Using a stop watch, prepare to time how long it takes to perform one volume scan. View the elevation position on the RDA summary status. Start the timer at any convenient elevation transition and stop the timer at the same transition of the next volume scan. If the time required is less than 5 minutes, and 30 seconds, no adjustments are required, and proceed to paragraph 6-6.30.

6-5.43 DCU DIGITAL CARD UD5A6A2 REPLACEMENT PROCEDURE.

One technician is required for this procedure.

6-5.43.1 Equipment and Tools Required.

1. Screwdriver set, Phillips-tip

2. Nut driver set, hex

3. ESD wrist strap with clip lead
4. ESD static protective bags.

6-5.43.2 Initial Conditions/Preliminary Setup.

**WARNING**

Failure to perform applicable shutdown steps in Table 6-13 could cause serious injury or death.

**NOTE**

Refer to paragraph 6-5.2 for special considerations for replacement procedures.

1. Open the left front and right rear UD5 cabinet doors and locate the Digital Control Unit UD5A6.
2. Perform steps 1 through 5 and 13 through 15 of Table 6-13 to shut down pedestal electronics.

6-5.43.3 Replacement Procedure.

**ESD** **CAUTION** **ESD**

All WSR-88D printed circuit cards are electrostatic sensitive devices which require special handling. Refer to paragraph 6-5.2.6 .

1. Put ESD wrist strap on and attach clip lead to cabinet chassis.
2. At cabinet rear, remove P1 from J2 on the Digital Control Unit.
3. At the front of the Digital Control Unit, remove the eight mounting screws and pull unit forward until slide stops are engaged.
4. Remove the 15 screws attaching the top cover to the chassis and then remove the top cover.
5. Remove the two screws located along the left side of the Analog Board UD5A6A1, and the one screw and standoff located at the left side of the Notch Filter UD5A6A3.
6. Remove the screw securing the stabilizer bar to front edge of the Analog Board and check the hinged standoffs on the right side of the Notch Filter and Analog Board for correct orientation of the hinge. Then move the Norch Filter and Analog Board up and to the right (clockwise) to gain access to the Digital Board UD5A6A2.
7. Remove ribbon cables P5, P6, and wire cable P7 by lifting them up. Also, remove P13 from the Notch Filter UD5A6A3.

8. Remove three mounting screws and two hinged standoffs along the right side of the Analog Board and Notch Filter. Place the Analog Board and Notch Filter in ESD static protective bags and set them aside.
9. Disconnect wire cables P9 and P10 from Digital Board.
10. Disconnect ribbon cables P8 and P11 from Digital Board.
11. Remove six hex nuts from Digital Board using the proper 11/32-inch nut driver.
12. Remove Digital Board UD5A6A2.
13. Remove three standoffs from left side of Digital Board using the No. 2 Phillips screwdriver and adjustable wrench.
14. Install three standoffs on the left side of new Digital Board.
15. Remove three standoff/hinges from right side of the Digital Board using the No. 2 Phillips screwdriver and adjustable wrench.
16. Install three standoff/hinges on the right side of new digital board.
17. Install new Digital Board UD5A6A2 in the DCU and check the hinged standoffs on the right side of the Digital Board for correct orientation of the hinge.
18. Install six hex nuts for Digital Board and tighten using the proper 11/32-inch nut driver.
19. Reconnect ribbon cable connections P8 and P11 to Digital Board.
20. Reconnect wire cable connectors P9 and P10 to Digital Board.
21. Install Analog Board and Notch Filter on standoffs using the proper screwdriver and adjustable wrench. Check the hinged standoffs on the right side of the Analog Board for correct orientation of the hinge.
22. Reconnect ribbon cables P5, P6, and cable wire P7 on Analog Board.
23. Reconnect stabilizer bar and screw to the Analog Board. Also connect P13 to the Notch Filter.
24. Set top cover down and install 15 screws using the No. 2 Phillips screwdriver.
25. Release slide stops and move slide-mounted unit back into cabinet.
26. Secure Digital Control Unit to cabinet rack using mounting screws and the No. 2 Phillips screwdriver.
27. At rear of unit, reconnect P1 to J2.
28. Close cabinet doors.
29. Perform steps 6, 7, and 17 of Table 6-15 to turn on pedestal electronics.

6-5.44 DCU POWER SUPPLIES UD5A6PS1/PS2/PS3 REPLACEMENT PROCEDURE.

One technician is required for PS1 or PS2 procedure. Two technicians are required for the PS3 procedure because of the +5 Vdc encoder power supply adjustment.

6-5.44.1 Equipment and Tools Required.

1. Screwdriver set, Phillips-tip
2. Nutdriver set, hex
3. Multimeter, Digital
4. ESD wrist strap with clip lead.

6-5.44.2 Initial Conditions/Preliminary Setup.

**WARNING**

Failure to perform applicable shutdown steps in Table 6-13 could cause serious injury or death.

**NOTE**

Refer to paragraph 6-5.2 for special considerations for replacement procedures.

1. Open the left front and right rear UD5 cabinet doors and locate the Digital Control Unit UD5A6.
2. Perform steps 1 through 5 and 13 through 15 of Table 6-13 to shut down pedestal electronics.

6-5.44.3 Replacement Procedure.

**ESD** **CAUTION** **ESD**

All WSR-88D printed circuit cards are electrostatic sensitive devices which require special handling. Refer to paragraph 6-5.2.6 .

1. Put ESD wrist strap on and attach clip lead to cabinet chassis.
2. Ensure Pedestal Motor Power circuit breakers CB2, 4, and 6 in the appropriate Secondary Power Distribution Power Panel UD7A3, UD7A29, or UD7A30 are turned **OFF**.
3. Ensure the Pedestal Electronics power switch on the Maintenance Panel UD5A2 is turned **OFF**.
4. At front, remove screws from each side of unit front using the proper screwdriver.

**CAUTION**

Unit is heavy. Do not attempt to force unit beyond slide stop.

5. Pull slide-mounted unit forward until slide stops engage.

**CAUTION**

When removing securing hardware, use a suitable holding screwdriver to prevent dropping hardware accidentally.

6. Remove screws from top cover using proper holding screwdriver and set cover aside.

**NOTE**

It is necessary to remove UD5A6PS3 in order to replace UD5A6PS1 and/or UD5A6PS2.

7. Perform the following to remove PS3.

   a. Label and remove the terminal lugs from terminal block on PS3. If replacing PS1 and/or PS2, insulate the loose terminal leads with electrical tape.

   b. While supporting PS3 to prevent damaging other components within the DCU, remove the three (3) screws securing PS3 to the side of the DCU drawer. Set PS3 aside.

   c. If replacing PS1 and/or PS2, proceed to step 8. If replacing PS3, reverse steps 7.a and 7.b to install new power supply.

   d. Perform steps 6, 7, and 17 of Table 6-15 to turn on DCU power supplies and pedestal electronics.

   e. To adjust PS3, perform RDADP DCU Drawer UD5A6PS3 Adjustment procedure per paragraph 3-6.5.3 in NWS EHB 6-513 (LPP Sites) or NWS EHB 6-514 (FSP Sites).

   f. Reverse steps 1 through 6 to complete installation, then proceed to step 12.

8. Keeping downward pressure on power supply to prevent damage to units in the DCU, remove the three power supply holding screws from underneath the unit using the proper screwdriver.

9. Lift the defective power supply enough to disconnect the power supply terminal block leader from the defective power supply using the proper screwdriver/nutdriver. Label the wires.

10. Remove defective power supply and set aside.

11. To install new PS1 or PS2, perform the following steps:

a. Reconnect the wires to the new power supply terminal block and tighten.

**NOTE**

PS1 and PS2 are factory set to the specified voltage and should not require adjustment. However, if adjustment is required, perform steps 11.b through 11.f.

b. Temporarily set the new power supply in the DCU so that end with terminal block and voltage adjustments are at the top. This is necessary to gain access to the voltage adjustments, if required.

c. If PS3 has been removed to facilitate PS1/PS2 removal/installation per step 7, ensure the loose terminal leads have been insulated with electrical tape.

d. Reverse steps 2 and 3 to turn on DCU power supplies.

e. Measure the power supply voltages at the following measurement points:

| Power Supply | Voltage | Measurement Points +Lead | -Lead | Adjustment Potentiometer |
|---|---|---|---|---|
| PS1 | +5 Vdc ± .05 | TB1-2 | GND | R21 |
| PS1 | +15 Vdc ± .15 | TB1-8 | GND | R41 |
| PS1 | -15 Vdc ± .15 | TB1-9 | GND | R41B |
| PS2 | +28 Vdc ± .5 | TB1-10 | GND | ADJUST |

f. Turn DCU power **OFF** by performing step 3, then step 2.

g. Set the new power supply in its proper position and secure with the three screws from underneath the DCU.

h. Reinstall PS3 by reversing steps 7.a and 7.b.

i. Reverse steps 1 through 6 to complete installation.

12. Close front and rear cabinet doors.

6-5.45 PEDESTAL/POWER AMPLIFIER UNIT UD5A7 REPLACEMENT PROCEDURE.

Two technicians are required for this procedure.

6-5.45.1 Equipment and Tools Required.

1. Screwdriver set, Phillips-tip.

6-5.45.2 Initial Conditions/Preliminary Setup.

**WARNING**

Failure to perform applicable shutdown steps in Table 6-13 could cause serious injury or death.

**NOTE**

Refer to paragraph 6-5.2 for special considerations for replacement procedures.

1. Open the left front and right rear UD5 cabinet doors and locate the Power Amplifier Unit UD5A7.
2. Perform steps 1 through 5 and 13 through 15 of Table 6-13 to shut down pedestal electronics.

6-5.45.3 Replacement Procedure.

1. At the rear of the Power Amplifier Unit UD5A7, disconnect connectors J1 through J3 and the ground wire connected to E1.
2. Remove the eight mounting screws on Power Amplifier front panel and pull unit forward until slide stops are engaged. Retain mounting screws.

**CAUTION**

UD5A7 is heavy. Two technicians are required to support the unit during removal and installation.

3. Using two people, remove Power Amplifier by releasing the slide locks on both sides of Power Amplifier and pulling the unit out.
4. Set old Power Amplifier aside.
5. Remove the outside portions of the drawer slides that are attached to the new Power Amplifier and if not required to replace slides in the cabinet, return them with the old Power Amplifier.
6. Reverse steps 1 through 3 for installation.
7. Perform steps 6, 7, and 17 of Table 6-15 to turn on pedestal electronics.
8. Close front and rear cabinet doors.

6-5.46 AZIMUTH/ELEVATION POWER AMP UD5A7A1 AND UD5A7A2 REPLACEMENT PROCEDURE.

Two technicians are required for this procedure.

6-5.46.1 Equipment and Tools Required.

1. Screwdriver set, flat-tip
2. Screwdriver set, Phillips-tip
3. Wrench, adjustable
4. Heat sink compound.

6-5.46.2 Initial Conditions/Preliminary Setup.

**WARNING**

Failure to perform applicable shutdown steps in Table 6-13 could cause serious injury or death.

**NOTE**

Refer to paragraph 6-5.2 for special considerations for replacement procedures.

1. Open the left front and right rear UD5 cabinet doors and locate the Power Amplifier Unit UD5A7.
2. Perform steps 1 through 5 and 13 through 15 of Table 6-13 to shut down pedestal electronics.

6-5.46.3 Replacement Procedure.

1. At the rear of the Power Amplifier Unit UD5A7, disconnect connectors J1 through J3 and the ground wire connected to E1.
2. Remove the eight mounting screws on Power Amplifier front panel using the proper screwdriver.

**CAUTION**

UD5A7 is heavy. Two technicians are required to support the unit during removal and replacement.

3. Pull unit forward until slide stops are engaged.
4. Remove Power Amplifier from rack slider and place on workbench or suitable work surface.

**CAUTION**

When removing securing hardware, use a suitable holding screwdriver to prevent dropping hardware accidentally.

5. Remove the top cover, front and rear panels of unit using the proper holding screwdriver.
6. Locate the servo amplifier that is to be replaced - UD5A7A1 (Azimuth) or UD5A7A2 (Elevation).

**NOTE**

The following steps are applicable to either UD5A7A1 or UD5A7A2.

7. Remove defective servo amplifier connectors J1 and J2 using proper screwdriver.
8. Remove the defective servo amplifier retaining screws using the proper screwdriver.
9. Remove defective servo amplifier UD5A7A1 or A2 from Power Amplifier Unit UD5A7.
10. Set defective servo amplifier aside.

**NOTE**

Evenly apply a light coating of heat sink compound to mounting area between replacement servo amplifier and chassis.

11. Reverse steps 1 through 9 for installation of replacement servo amplifier.
12. Perform steps 6, 7, and 17 of Table 6-15 to turn on pedestal electronics.
13. Close front and rear cabinet doors.

6-5.47 HV BUS MONITOR UD5A7A3 REPLACEMENT PROCEDURE.

One technician is required for this procedure.

6-5.47.1 Equipment and Tools Required.

1. Screwdriver set, Phillips-tip
2. Screwdriver set, flat-tip
3. Screwdriver set, Phillips-offset

6-5.47.2 Initial Conditions/Preliminary Setup.

**WARNING**

Failure to perform applicable shutdown steps in Table 6-13 could cause serious injury or death.

**NOTE**

Refer to paragraph 6-5.2 for special considerations for replacement procedures.

1. Open the left front and right rear UD5 cabinet door and locate the Power Amplifier Unit UD5A7.
2. Perform steps 1 through 5 and 13 through 15 of Table 6-13 to shut down pedestal electronics.

6-5.47.3 Replacement Procedure.

1. At the rear of the Power Amplifier Unit UD5A7, disconnect connector J1.

2. Remove the eight mounting screws on Power Amplifier front panel using the proper screwdriver.
3. Pull unit forward along slides until slide stops are engaged.

**CAUTION**

When removing securing hardware, use a suitable holding screwdriver to prevent dropping hardware accidentally.

4. Remove the top cover using the proper holding screwdriver and set aside.
5. Locate the HV Bus Monitor Board UD5A7A3.
6. Loosen two holding screws on plug-in connector P5 using the proper screwdriver.
7. Disconnect P5 from J1 on HV Bus Monitor Board.
8. Remove mounting screws using the proper screwdriver and set defective unit aside.
9. Reverse steps 1 through 8 for installation.
10. Perform steps 6, 7, and 17 of Table 6-15 to turn on pedestal electronics.
11. Close left front and right rear cabinet doors.

6-5.48 TRANSIENT ABSORBER UD5A7CR5 AND UD5A7CR6 REPLACEMENT PROCEDURE.

One technician is required for this procedure.

6-5.48.1 Equipment and Tools Required.

1. Screwdriver set, Phillips-tip
2. Wrench set, combination.

6-5.48.2 Initial Conditions/Preliminary Setup.

**WARNING**

Failure to perform applicable shutdown steps in Table 6-13 could cause serious injury or death.

**NOTE**

Refer to paragraph 6-5.2 for special considerations for replacement procedures.

1. Open the left front and right rear UD5 cabinet doors and locate the Power Amplifier Unit UD5A7.

2. Perform steps 1 through 5 and 13 through 15 of Table 6-13 to shut down pedestal electronics.

6-5.48.3 Replacement Procedure.

1. At the rear of the Power Amplifier Unit UD5A7, disconnect connector J1.
2. Remove the eight mounting screws on Power Amplifier front panel using the proper screwdriver.
3. Pull unit forward along slides until slide stops are engaged.

**NOTE**

Removal of Pedestal/Power Amplifier Unit UD5A7 may ease the removal of CR5 and CR6. Refer to paragraph 6-5.45 for removal procedures.

**CAUTION**

When removing securing hardware, use a suitable holding screwdriver to prevent dropping hardware accidentally.

4. Remove the top cover using the proper holding screwdriver and set aside.
5. Locate the defective Transient Absorber CR5 or CR6.
6. Remove CR5/CR6(+) and CR5/CR6(-) leads using the proper wrench. Tag leads if needed.
7. Remove defective CR5 or CR6 using the proper screwdriver and set aside.
8. Reverse steps 1 through 7 for installation.
9. Perform steps 6, 7, and 17 of Table 6-15 to turn on pedestal electronics.
10. Close left and rear cabinet doors.

6-5.49 RELAY UD5A7K1 REPLACEMENT PROCEDURE.

One technician is required for this procedure.

6-5.49.1 Equipment and Tools Required.

1. Screwdriver set, Phillips-tip
2. Screwdriver set, flat-tip
3. 1/2-inch drive ratchet
4. 1/2-inch drive 6-inch extension
5. 1/2-inch drive 5/8-inch socket.

6-5.49.2 Initial Conditions/Preliminary Setup.

**WARNING**

Failure to perform applicable shutdown steps in Table 6-13 could cause serious injury or death.

**NOTE**

Refer to paragraph 6-5.2 for special considerations for replacement procedures.

1. Open the left front and right rear UD5 cabinet doors and locate the Power Amplifier Unit UD5A7.
2. Perform steps 1 through 5 and 13 through 15 of Table 6-13 to shut down pedestal electronics.

6-5.49.3 Replacement Procedure.

1. At the rear of the Power Amplifier Unit UD5A7, disconnect connector J1.
2. Remove the eight mounting screws on Power Amplifier front panel using the proper screwdriver.
3. Pull unit forward until slide stops are engaged.

**CAUTION**

When removing securing hardware, use a suitable holding screwdriver to prevent dropping hardware accidentally.

4. Remove the top cover using the proper holding screwdriver and set aside.
5. Locate relay UD5A7K1.
6. Remove and tag relay leads 1 through 11 using the proper screwdriver.

**CAUTION**

Take special precaution for proper orientation of diode CR4 during removal and installation of K1 relay.

7. Remove mounting bolts from relay UD5A7K1 using 1/2-inch drive 5/8-inch socket with 6-inch extension.
8. Remove defective relay and set aside.
9. Reverse steps 1 through 7 for installation.

10. Perform steps 6, 7, and 17 of Table 6-15 to turn on pedestal electronics.

11. Close left front and right rear cabinet doors.

6-5.50 MAINTENANCE PANEL ASSEMBLY UD5A2 REPLACEMENT PROCEDURE.

One technician is required for this procedure.

6-5.50.1 Equipment and Tools Required.

1. Screwdriver set, flat-tip
2. Screwdriver set, Phillips-tip
3. Tie wraps
4. Diagonal cutters.

6-5.50.2 Initial Conditions/Preliminary Setup.

**WARNING**

Failure to perform applicable shutdown steps in Table 6-13 could cause serious injury or death.

**NOTE**

Refer to paragraph 6-5.2 for special considerations for replacement procedures.

1. Open the left front UD5 cabinet door and locate the Maintenance Panel UD5A2.
2. Perform steps 1 through 5 and 13 through 22 of Table 6-13 to shut down RDADP, DAU, and pedestal electronics.

6-5.50.3 Replacement Procedure.

**CAUTIONS**

When disconnecting and replacing connectors, take care not to damage the plugs or the connectors.

When removing securing hardware, use a suitable holding screwdriver to prevent dropping hardware accidentally.

1. Swing maintenance panel back after loosening panel captive screw using the proper holding screwdriver.
2. Remove the plastic safety shield from TB1 using the proper screwdriver and set shield aside.

3. Remove the wire labeled A2TB1-1 from the top left of TB1 terminal block using the proper screwdriver.
4. Repeat step 3 for remaining labeled wires.
5. Locate panel directly behind Maintenance Panel UD5A2.
6. Remove middle row connector J1 using the proper screwdriver.
7. Remove restraining straps from cable harness until disconnected cable is free.
8. At front panel, loosen the screws using the proper screwdriver, remove panel and set aside.
9. Reverse steps 1 through 8 for installation.
10. Replace cable restraining straps with tie wraps.
11. Perform steps 7, 8, 9, 12, 14, 15, 16, and 17 of Table 6-15 to turn on RDADP, DAU, and pedestal electronics.
12. Close cabinet door.

6-5.51 COMMUNICATIONS LRU REPLACEMENT INFORMATION.

The Microwave Line of Sight LRU removal, replacement, and strapping procedures are contained in NWS EHB 6-545. RDA communication shelter details are provided in the RPIE manual and the RPG/repeater shelter details are provided as addendums to the Wideband Communications Manual.

6-5.52 ANTENNA PEDESTAL UD2 LRU REPLACEMENT.

6-5.52.1 Elevation Manual Drive Assembly UD2A1A1A1 Replacement Procedure.

Two technicians are required for this procedure.

6-5.52.1.1 Equipment and Tools Required.

1. Wrench set, ball hex
2. Screwdriver set, flat-tip
3. Needlenose pliers, 6-inch (extra long, slim)
4. Socket set, 3/8-inch drive (deep well)
5. Ratchet wrench, 3/8-inch drive and extension
6. Ladder, 20-foot extension
7. Harness, safety.

6-5.52.1.2 Initial Conditions/Preliminary Setup.

**WARNING**

Failure to perform applicable shutdown steps in paragraph 6-6.15.3 could cause serious injury or death from antenna radiation or antenna movement.

1. Perform steps 1, 2, 3, 5, and 6 of paragraph 6-6.15.3 to shut down antenna/pedestal.

**WARNING**

Failure to place the pedestal PWR ON/SAFE Safety Interlock Switch to the SAFE position could cause serious injury or death.

2. At the azimuth housing, ensure the PWR ON/SAFE Safety Interlock Switch is set to the SAFE position.

**WARNING**

Failure to move azimuth and elevation stow pins from OPERATE to STOW could cause serious injury or death.

3. Ensure that the azimuth and elevation stow pins are in STOW.

**WARNING**

The technician who climbs the ladder is responsible for putting on the safety harness and hooking it to a safe secure position after ascending the 20-foot ladder.

6-5.52.1.3 Replacement Procedure.

**NOTE**

See Figure 6-35 for replacing manual drive stow pin switches.

1. Place ladder below elevation assembly access door.
2. Don safety harness prior to ascending ladder.
3. Climb ladder to gain access to manual drive.
4. Ensure that technician wearing safety harness is secured to pedestal prior to starting removal procedure.

**NOTE**

You will be entering a confined space, non-permit required. This means the confined space does not contain any atmospheric hazards capable of causing death or serious physical harm.

5. Open the elevation housing access door.
6. Remove the stow pin switch cable from the cable clamp and TB1 using the proper screwdriver.
7. Remove the screws and washers from the manual drive assembly using the proper hex wrench.

8. Remove the manual drive assembly from the elevation drive motor and climb down to the radome floor.

9. Remove gasket cover from the drive and set aside.

10. Unscrew and remove the stow pin switch locking sleeve, located in front of the securing nut, using the needle nose pliers and set aside.

11. Remove the securing nut and washers using the proper tools and set aside.

12. Push switch through opening of manual drive assembly and set drive aside.

13. Install switch in replacement drive by reversing steps 10 through 12.

**NOTE**

Visually inspect roller on switch to ensure it is vertically positioned, then install stow pin to assure smooth operation.

14. Climb ladder again to elevation assembly with new manual drive assembly.

15. Ensure that technician wearing safety harness is secured to pedestal prior to starting installation procedure.

16. Install manual drive assembly by reversing steps 5 through 9.

17. Climb down ladder and secure safety harness and ladder.

18. Perform steps 1 through 15 of paragraph 6-6.16.3 to turn on antenna/pedestal.

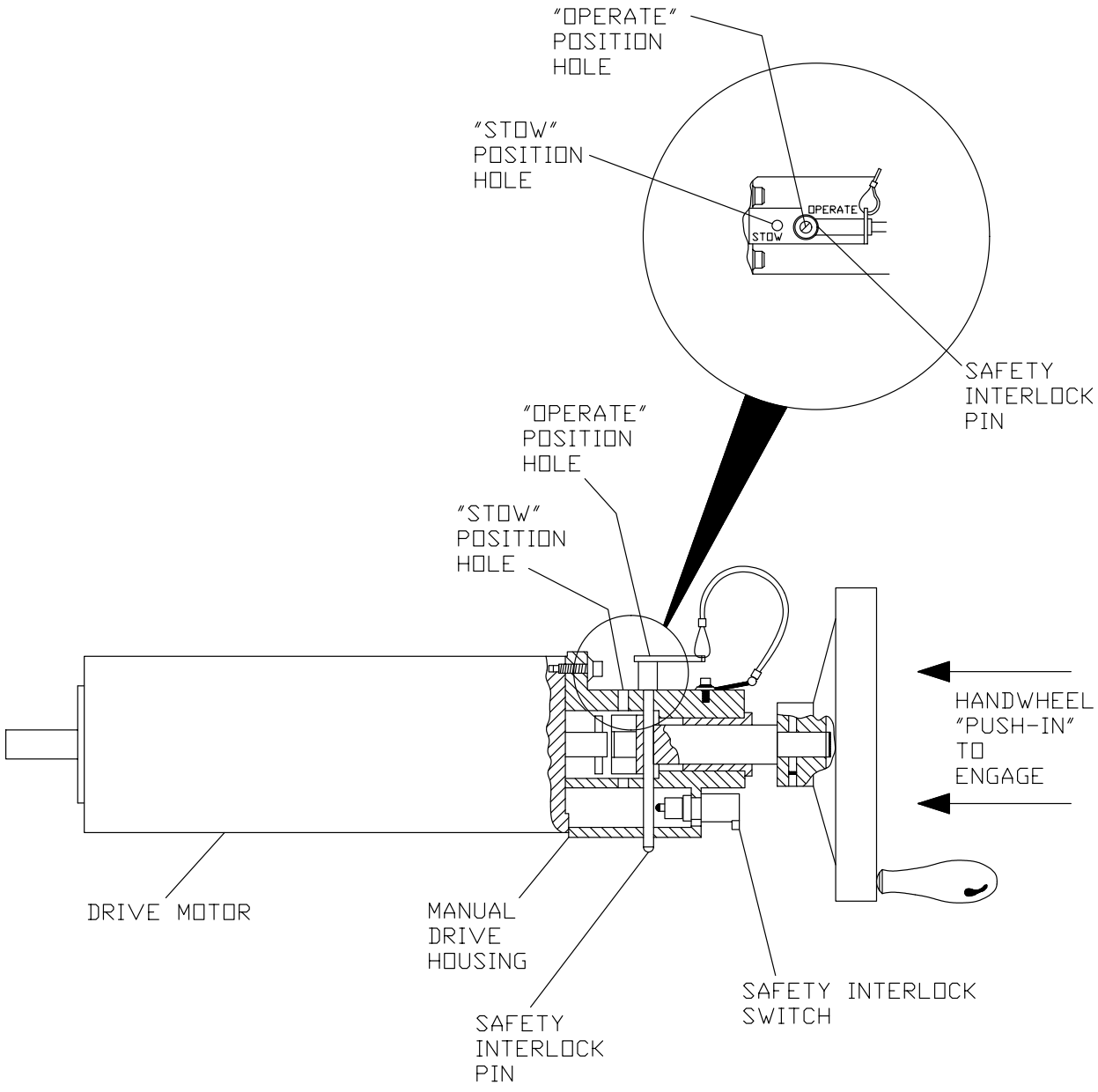


Figure 6-35. Elevation/Azimuth Manual Drive Assembly

6-5.52.2 Elevation Manual Drive Stow Pin Switch UD2A1A1A1S1 Replacement Procedure.

Two technicians are required for this procedure.

6-5.52.2.1 Equipment and Tools Required.

1. Wrench set, ball hex
2. Screwdriver set, flat-tip
3. Needlenose pliers, 6-inch (extra long, slim)
4. Socket set, 3/8-inch drive (deep well)
5. Ratchet wrench, 3/8-inch drive and extension
6. Ladder, 20-foot extension
7. Harness, safety.

6-5.52.2.2 Initial Conditions/Preliminary Setup.

**WARNING**

Failure to perform applicable shutdown steps in paragraph 6-6.15.3 could cause serious injury or death from antenna radiation or antenna movement.

1. Perform steps 1, 2, 3, 5, and 6 of paragraph 6-6.15.3 to shut down antenna/pedestal.

**WARNING**

Failure to place the pedestal PWR ON/SAFE Safety Interlock Switch to the SAFE position could cause serious injury or death.

2. At the azimuth housing, ensure the PWR ON/SAFE Safety Interlock Switch is set to the SAFE position.

**WARNING**

Failure to move azimuth and elevation stow pins from OPERATE to STOW could cause serious injury or death.

3. Ensure that the azimuth and elevation stow pins are in STOW.

**WARNING**

The technician who climbs the ladder is responsible for putting on the safety harness and hooking it to a safe secure position after ascending the 20-foot ladder.

6-5.52.2.3 Replacement Procedure.

**NOTE**

See Figure 6-35 for replacing elevation manual drive stow pin safety interlock switch.

1. Place ladder below elevation assembly access door.
2. Don safety harness prior to ascending ladder.
3. Ensure that technician wearing safety harness is secured to pedestal prior to starting removal procedure.

**NOTE**

You will be entering a confined space, non-permit required. This means the confined space does not contain any atmospheric hazards capable of causing death or serious physical harm.

4. Open elevation housing access door.
5. Remove the defective stow pin switch cable from the cable clamp and TB1 using the proper screwdriver.
6. Remove the screws and washers from the manual drive assembly using the proper hex wrench.
7. Remove the manual drive assembly from the elevation drive motor and climb down to the radome floor to work on assembly.
8. Remove gasket cover and set aside.
9. Remove ball lock pin.
10. Unscrew and remove the safety interlock switch locking sleeve, located in front of the securing nut, using the needle nose pliers and set aside.
11. Remove the securing nut and washers using the proper tools and set aside.
12. Push switch through opening of manual drive assembly and set aside.
13. Install replacement switch by reversing steps 9 through 12.

**NOTE**

Visually inspect roller on switch to ensure it is vertically positioned, then install stow pin to assure smooth operation.

14. Climb ladder again to elevation assembly with manual drive assembly.
15. Ensure that technician wearing safety harness is secured to pedestal prior to starting installation procedure.

16. Install manual drive assembly by reversing steps 4 through 8.

17. Climb down ladder and secure safety harness and ladder.

18. Perform steps 1 through 15 of paragraph 6-6.16.3 to turn on antenna/pedestal.

6-5.52.3 Elevation Data Package UD2A1A1A2 and Elevation Encoder UD2A1A1A2A1 Replacement Procedure.

Two technicians are required for this procedure.

6-5.52.3.1 Equipment and Tools Required.

1. Socket set, hex-head driver, 3/8-inch drive
2. Screwdriver set, flat-tip
3. Wrench, torque, 30-200 in-lb., 3/8-inch drive
4. Wrench set, socket, 3/8-inch drive
5. Ladder, 20-foot extension
6. Harness, safety
7. Pliers, diagonal (cutter type)
8. NWS EHB 6-513 (LPP) or NWS EHB 6-514 (FSP) Pedestal System Manuals.

6-5.52.3.2 Initial Conditions/Preliminary Setup.

**WARNING**

Failure to perform applicable shutdown steps in paragraph 6-6.15.3 could cause serious injury or death from antenna radiation or antenna movement.

1. Perform steps 1, 2, 3, 5 and 6 of paragraph 6-6.15.3 to shut down antenna/pedestal.

**WARNING**

Failure to place the pedestal PWR ON/SAFE Safety Interlock Switch to the SAFE position could cause serious injury or death.

2. At the azimuth housing, ensure the PWR ON/SAFE Safety Interlock Switch is set to the SAFE position.

**WARNING**

Failure to move azimuth and elevation stow pins from OPERATE to STOW could cause serious injury or death.

3. Ensure that the azimuth and elevation stow pins are in STOW.

**WARNING**

The technician who climbs the ladder is responsible for putting on the safety harness and hooking it to a safe secure position after ascending the 20-foot ladder.

6-5.52.3.3 Replacement Procedure.

1. Place ladder below elevation access door.
2. Don safety harness prior to ascending ladder.
3. Ensure that technician wearing safety harness is secured to pedestal prior to starting removal procedure.

**NOTE**

You will be entering a confined space, non-permit required. This means the confined space does not contain any atmospheric hazards capable of causing death or serious physical harm.

4. Open elevation housing access door.
5. If applicable, perform Elevation Encoder replacement per NWS EHB 6-513*/6-514*, paragraph 2-4.4.4.
6. If Elevation Encoder was replaced, perform Elevation Encoder alignment per paragraph 6-6.17.3 .
7. If applicable, perform Elevation Data Package replacement per NWS EHB 6-513*/6-514*, paragraph 2-4.4.12.
8. Remove all tools and material from the antenna housing.
9. Close elevation housing access door.
10. Climb down and secure ladder and safety harness.
11. Perform steps 1 through 15 of paragraph 6-6.16.3 to turn on the antenna/pedestal.

6-5.52.4 Elevation Gearbox UD2A1A1A3 Replacement Procedure.

Three (3) technicians are required for this procedure.

6-5.52.4.1 Equipment and Tools Required.

1. Socket set, hex, 3/8″ and 1/2″ drive

- - - - -

* Site dependent

2. Ratchet, 3/8″ and 1/2″ drive
3. Breaker bar, 3/8″ and 1/2″ drive
4. Wrench set, ball hex
5. Torque wrench, 15-100 ft-lb, 3/8″ drive
6. Torque wrench, 10-100 ft-lb, 1/2″ drive
7. Wrench set, combination
8. Screwdriver set, flat-tip
9. Screwdriver set, Phillips
10. Jacking screws, three, 1/2″-13 UNC-28
11. Five 5/8-18 × 3″ pieces of threaded rod
12. Eye bolt, 3/8″-16 UNC-28, 6″ shank
13. O-ring, P/N 5-069N674-70 CAGE 02697
14. O-ring, P/N MS28778-12
15. MD-109 Drain hose assembly, SE12 (SERD 28) P/N 3F6132 CAGE 97484 or equivalent
16. Pump, SE1-1, P/N 1P579 CAGE 25795 or equivalent
17. Oil, 1 gallon P/N SCH 75W CAGE 12939 or P/N TRIBOLUBE L-3 CAGE 66164 (for cold weather sites)
18. Grease, Moly Disulfide (MIL-G-21164)
19. Grease gun with flexible hose
20. Oil, SAE-30
21. Empty container, one gallon
22. Tape, teflon
23. Rope, 30 feet
24. Ladder, extension
25. Wipes, lint-free, oil absorbent
26. Safety Harness, DBI/SALA P/N 1105754, 1105750, 1105751, 1105752 or 1105753 (size appropriate) or equivalent
27. 3-foot shock absorbing lanyard, DBI/SALA P/N 1220007 or equivalent

28. 6-foot positioning lanyard, Miller Safety Equipment P/N 210WDLS6 or equivalent
29. 2″ Carabiner, Miller Safety Equipment P/N 18D1 or equivalent
30. Davit crane
31. Curved outrigger hoist
32. Gloves, rubber
33. Protective clothing

6-5.52.4.2 Initial Conditions/Preliminary Setup.

**WARNING**

Failure to perform applicable shutdown steps in paragraph 6-6.15.3 could cause serious injury or **DEATH** from antenna radiation or antenna movement.

1. Perform steps 1, 2, 3, 5, and 6 of paragraph 6-6.15.3 to shut down antenna/pedestal.

**WARNING**

Failure to place the pedestal PWR ON/SAFE Safety Interlock Switch to the SAFE position could cause serious injury or **DEATH**.

2. At the azimuth housing, ensure the PWR ON/SAFE Safety Interlock Switch is set to the SAFE position.

**WARNING**

Failure to move azimuth and elevation mechanisms from OPERATE to STOW could cause serious injury or **DEATH**.

3. Ensure that the azimuth and elevation stow pins are in STOW.
4. Setup davit crane for hoisting items to the radome deck. Refer to paragraph 6-5.1.4.

6-5.52.4.3 Replacement Procedure.

1. Don safety harness prior to ascending ladder.
2. Place the ladder on the ladder bar above the elevation access door and have one technician climb to the top of the elevation housing.
3. Ensure that the technician on top of the elevation housing is secured to the antenna prior to starting the removal procedure.

4. Carry the curved outrigger hoist to the top of the elevation housing and place it in the left davit tube.

**CAUTION**

The curved outrigger hoist is rated to lift 100 pounds. It is to be used ONLY to lift the davit crane. DO NOT attempt to lift the elevation gearbox or any other item that weighs in excess of 100 pounds.

5. Using the curved outrigger hoist, raise the davit crane to the top of the elevation housing and place it in the right davit tube.
6. Using the davit crane, lower the curved outrigger to the radome floor and place it out of the way.
7. Remove the elevation access cover at the top of the elevation housing and store it on the radome floor.
8. Place the ladder on the ladder bar beneath the elevation access door and open the access door.

**NOTE**

You will be entering a confined space, non-permit required. This means the confined space does not contain any atmospheric hazards capable of causing death or serious physical harm.

9. Connect one end of the 5/16″ (FSP) or 1/2″ (LPP) drain hose to the gearbox drain/fill valve and place the other end in the one gallon empty container.
10. Open the drain/fill valve by rotating the butterfly valve fully counterclockwise.
11. After draining the gearbox completely, close the drain/fill valve by rotating the butterfly valve fully clockwise.
12. Remove the drain/fill hose.

**WARNING**

When removing or replacing the elevation gearbox, the oil sensor, expansion chamber (LPP only), and expansion relief valve (LPP only), should be removed to prevent possible damage to them.

13. Disconnect the elevation gearbox oil level sensor cable from 2A1TB1. Label the wires if necessary.
14. Using the 1-5/8″ combination wrench, remove the sensor from the gearbox.
15. Using the proper tools, remove the expansion chamber and relief valve (LPP only, if installed).

16. Disconnect the drive motor power and control cables.
17. Remove cable clamps and ties from the manual drive interlock switch cable and disconnect the connector.
18. Remove the elevation stow pins from the STOW position.
19. Remove the pin from the manual drive hand-wheel.
20. Engage and rotate the hand-wheel until one of the drive motor coupler set screws is visible in the motor adapter hole. (See Figure 6-36.)
21. Using the proper size hex wrench, loosen the set screw nearest the gearbox, rotate the hand-wheel until the second set screw is visible and loosen it.
22. Replace the elevation stow pins in the STOW position.
23. Using the proper size hex wrench, remove the six screws that hold the manual drive to the drive motor. Remove the manual drive and store on the radome deck.
24. Using the proper size hex wrench, remove the six screws that hold the motor adapter to the gearbox.
25. Remove the motor and motor adapter and store on the radome deck.
26. Screw the lifting eye bolt into the hole on the top of the elevation gearbox. (See Figure 6-36.)
27. Route the davit crane cable through the access hatch in the top of the elevation housing and connect it to the eye bolt and take up all the slack.
28. Using the 1/2″ breaker bar and the proper size hex socket, break seating torque on the five gearbox mounting bolts and turn one turn counterclockwise.
29. Using the turnbuckle, rotate the elevation gearbox in the “DISENGAGE” direction. The output pinion is fully disengaged when the turnbuckle stops rotating.
30. Remove the quick release pin from the backlash bracket and swing the turnbuckle away from the elevation gearbox.
31. Install the three 1/2″-13 jacking screws in the elevation gearbox mounting flange.
32. With the weight of the gearbox suspended by the davit crane, alternately remove the five elevation gearbox mounting bolts from the mounting flange and replace them with the 5/8″-18 $\times$ 3″ threaded rod. The threaded rod will “pilot” the gearbox in and out.
33. Alternately turn the three jacking screws in a clockwise direction to unseat the gearbox.

**WARNING**

Three people are required to safely remove and replace the elevation gearbox.

34. Lower the elevation gearbox to the floor of the elevation housing.

35. Remove the davit crane cable from the lifting eye bolt, raise it through the access hatch, and bring it in through the elevation access door.

36. Re-attach the davit crane cable to the lifting eye bolt and tie the rope into the lifting eye bolt for the third person on the radome floor to use as a tag line.

37. Place a protective cover (rubber or foam) between the elevation housing access hatch and the davit crane cable to protect paint and cable.

38. Using the davit crane, lift the elevation gearbox far enough for the person on the ladder to guide it through the elevation door.

39. With the person on the floor using the rope to keep the elevation gearbox away from the ladder and pedestal, lower the elevation gearbox to the radome deck.

40. Using the various parts from the old gearbox, configure the replacement gearbox and use the plugs removed from the new gearbox in the holes on the old gearbox.

**NOTE**

If this is a LPP site, a kit will be furnished with the replacement gearbox. Use this kit to configure the new gearbox.

41. Apply a liberal amount of grease to the gearbox O-ring.

42. Remove the lifting eye bolt from the old gearbox and install it in the new gearbox. Attach the davit crane cable and rope to the lifting eye bolt.

43. With one technician on top of the elevation housing and one on the ladder, raise the new elevation gearbox to the level of the elevation housing access door as the third technician keeps the replacement gearbox from contacting the sides of the pedestal.

44. The technician on the ladder will guide the gearbox through the elevation access door.

45. Set the gearbox on the elevation housing floor and disconnect the rope and davit crane cable.

46. Re-route the davit crane cable through the top of the elevation housing and re-attach it to the lifting eye.

47. Slowly raise the gearbox and using the 5/8″-18 threaded rod as pilots, align it with the hole in the elevation housing.

48. Dip the mounting bolts in SAE-30 oil.

49. Alternately replace the threaded rod with the mounting bolts.

50. Snug all the bolts up finger tight.

51. Alternately turn the mounting bolts one turn at a time until the gearbox is seated in the elevation housing.

52. Torque all of the 5/8″-18 Grade 8 mounting bolts to 80 foot-pounds, then break torque by rotating each bolt 1/2 turn counterclockwise.

53. Disconnect the davit crane cable.

54. Remove the lifting eye bolt.

55. Attach the turnbuckle to the backlash bracket and insert the quick release pin.

56. Rotate the turnbuckle so that the gearbox rotates in the "ENGAGE" direction.

57. When the gearbox stops rotating, it is in the fully engaged position.

58. Rotate the turnbuckle in the opposite direction 1 1/2 turns. This is the preliminary position for setting backlash.

59. Install a new O-ring on the oil level sensor, apply a liberal amount of grease, and install it into the gearbox. Tighten with the 1-5/8″ wrench.

60. Reconnect the wires to 2A1TB1.

61. Ensure the drain/fill petcock is open by rotating it in the counterclockwise direction.

62. Connect the drain/fill hose to the drain/fill petcock.

63. Place an empty 1 gallon container under the overflow tube and open the overflow petcock.

**CAUTION**

Use 75W synthetic oil. Use SCH 75W Synthetic Gear Oil by American Lubricants, Buffalo, NY (Cage Code 12939). However, for those sites where the operating temperature falls to -40° C for extended periods of time use Tribolube L-3 Synthetic Gear Oil by Aerospace Lubricants, Inc., Columbus, OH 43212 (Cage Code 66164). **Using the wrong oil will seriously damage the gearbox.**

64. Connect the other end of the hose to the pump and fill the gearbox until oil just drains from the overflow tube.

65. Close both petcocks by rotating them to the fully clockwise position.

66. Clean both petcocks with a dry, lint-free cloth.

67. Remove the elevation stow pins.

68. Have the technician on the radome floor move the antenna in elevation until the keyway is visible on the gearbox shaft.

69. Mark the keyway on the coupler with a felt tip pen to facilitate aligning the keyway.

70. Dip the motor adapter mounting bolts in SAE-30 oil.

71. Install the drive motor to the gearbox and install the six mounting bolts.

72. Torque the mounting screws to 8 foot pounds.

73. LPP sites perform Elevation Backlash Setting Procedure per NWS EHB 6-513 paragraph 2-4.4.3.4. FSP sites continue with step 74.

74. Install the manual drive onto the motor with the six mounting screws.

75. Connect the drive motor control and power cables.

76. Connect the manual drive interlock switch cable.

77. Tighten the coupler set screw that is visible in the motor adapter peep hole.

78. Using the manual drive handwheel, rotate the gearbox until the other set screw is visible and tighten it.

79. Re-install the elevation stow pins in the STOW position.

80. FSP sites perform Elevation Backlash Setting Procedure per NWS EHB 6-514 paragraph 2-4.4.3.4.

81. Bring the curved outrigger hoist back to the top of the elevation housing.

82. Remove the davit crane from the elevation housing davit hole and lower it to the radome floor using the curved outrigger hoist.

83. Replace the cover on top of the elevation housing.

84. Carry the curved outrigger hoist to the radome floor.

85. Remove all tools and equipment from the elevation housing.

86. Place the elevation and azimuth stow pins in the OPERATE position.

87. Close the elevation housing access door and descend the ladder.

88. Remove the ladder and store all equipment.

**NOTE**

Ensure davit crane, maintenance hatch railing, ladder and curved outrigger are stowed away from the base of the radome and where they will not interfere with antenna movement.

89. Perform steps 1 through 15 of paragraph 6-6.16.3 to restore the antenna/pedestal to operation.

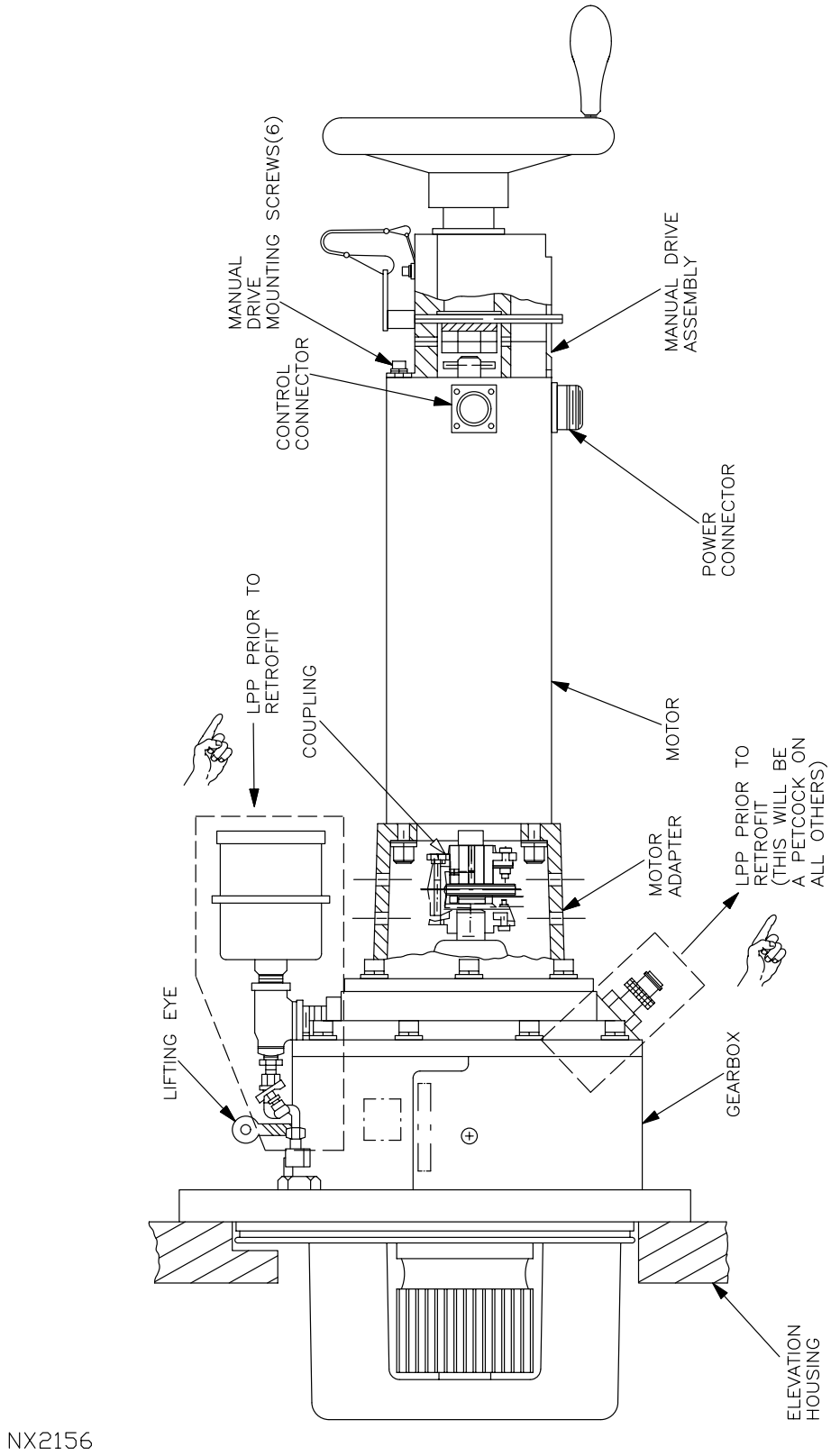


Figure 6-36. Elevation Gearbox/Motor Removal/Installation

6-5.52.5 Elevation Gearbox Drive Motor UD2A1A1B1 Replacement Procedure.

Two technicians are required for this procedure.

6-5.52.5.1 Equipment and Tools Required.

1. Sockets, 3/8-inch drive
2. Ratchet, 3/8-inch drive
3. Wrench, torque, 15-100 ft-lb, 3/8-inch drive
4. Wrench, torque, 30-200 ft-lb, 3/8-inch drive
5. Screwdriver set, Phillips-tip
6. Ladder, 20-foot extension
7. Rope, 20 feet, 1/4-inch nylon
8. Harness, safety
9. Pliers, diagonal.

6-5.52.5.2 Initial Conditions/Preliminary Setup.

**WARNING**

Failure to perform applicable shutdown steps in paragraph 6-6.15.3 could cause serious injury or death from antenna radiation or antenna movement.

1. Perform steps 1, 2, 3, 5, and 6 of paragraph 6-6.15.3 to shut down antenna/pedestal.

**WARNING**

Failure to place the pedestal PWR ON/SAFE Safety Interlock Switch to the SAFE position could cause serious injury or death.

2. At the azimuth housing, ensure the PWR ON/SAFE Safety Interlock Switch is set to the SAFE position.

**WARNING**

Failure to move azimuth and elevation stow pins from OPERATE to STOW could cause serious injury or death.

3. Ensure that the azimuth and elevation stow pins are in STOW.

**WARNING**

The technician who climbs the ladder is responsible for putting on the safety harness and hooking it to a safe secure position after ascending the 20-foot ladder.

6-5.52.5.3 Replacement Procedure.

1. Don safety harness prior to ascending ladder.
2. Place ladder above elevation access door and have one technician climb to the top of the pedestal.
3. Ensure that technician wearing safety harness is secured to pedestal prior to starting removal procedure.
4. Raise the lifting fixture Davit hoist, to the top of the pedestal, using the curved out rigger, and set in place in the right Davit tube.
5. Remove the elevation inspection cover at the top of the elevation housing using the proper screwdriver and set it aside.
6. Place ladder below the elevation housing access door.

**NOTE**

You will be entering a confined space, non-permit required. This means the confined space does not contain any atmospheric hazards capable of causing death or serious physical harm.

7. Open elevation housing access door.
8. Have the other technician enter the elevation housing to assist in removing the elevation drive motor.

**NOTE**

See Figure 6-36 for steps 9 through 14.

9. Disconnect elevation motor control/power cables and move them out of the way.
10. Remove manual drive stow pin switch cable from A1TB1.
11. Remove the manual drive assembly from the drive motor using the proper hex-head socket and move it out of the way.
12. Locate the motor shaft key access hole in the motor adapter.
13. Rotate motor rear shaft until the setscrew is visible through the access hole. Loosen the setscrew on the motor side of the coupling using the proper hex-head screwdriver.

**WARNING**

Do not allow any person to stand directly beneath an object being raised or lowered from the pedestal.

**NOTE**

Two people are required to safely remove and replace the drive motor.

14. Remove faulty motor and adapter from the gearbox using the proper hex-head socket.
15. Put one end of the curved outrigger rope through one screw hole on each side of the motor adapter and tie it tightly.
16. Carefully lower the motor and adapter to the radome floor using curved outrigger.
17. Remove adapter from faulty motor using the proper hex-head socket and set it aside.
18. Remove coupling key from faulty motor shaft.
19. Insert key into keyway of replacement motor shaft.
20. Attach motor adapter to replacement motor using the proper hex-head socket.
21. Torque each screw to 20 foot-lbs using the proper tools.
22. Carefully raise the motor and adapter into the elevation housing and remove the rope.
23. Align motor shaft key with coupling keyway and guide motor shaft into coupling until motor adapter flange is seated on gearbox.
24. Mount motor and adapter to gearbox using the proper hex-head socket.
25. Torque each screw to 11 ft-lbs (132 in-lbs) using the proper tools.
26. Rotate rear motor shaft to align coupling setscrews with access holes in motor adapter. Tighten motor shaft setscrews.
27. Mount manual drive assembly to the drive motor using the proper Allen wrench.
28. Torque each screw to 11 ft-lbs (132 in-lbs) using the proper tools.
29. Connect motor control/power cables to motor.
30. Reconnect the manual drive assembly stow pin switch cable and put the safety interlock pin in the OPERATE hole.
31. Have technician on top of elevation housing replace the elevation inspection cover using the proper screwdriver.
32. Remove the lifting fixture Davit hoist from the top of the pedestal and lower to the radome floor, using the curved outrigger.
33. Secure curved outrigger to elevation arm.
34. Place ladder above elevation housing access door and have the other technician climb down and remove ladder temporarily.
35. Put the elevation stow pins in the OPERATE position.

36. Have technician in the elevation housing test elevation movement by turning the manual drive.

37. Place ladder below elevation housing access door.

38. Have technician in the elevation housing exit, close the elevation housing access door, and climb down.

39. Secure ladder, safety harness, and all tools and materials.

40. Perform steps 1 through 15 of paragraph 6-6.16.3 to turn on the antenna/pedestal.

6-5.52.6 Elevation Stow Pin Switch UD2A1A1S3/S4 (LPP) or UD2A1A1A8S1/A9S1 (FSP) Replacement Procedure.

Two technicians are required for this procedure.

6-5.52.6.1 Equipment and Tools Required.

1. Screwdriver set, flat-tip
2. Socket set, 3/8-inch drive (deep well)
3. Needlenose pliers, 6-inch (long nose, slim)
4. Wrench, ratchet 3/8-inch drive
5. Ladder, 20-foot extension
6. Harness, safety.

6-5.52.6.2 Initial Conditions/Preliminary Setup.

**WARNING**

Failure to perform applicable shutdown steps in paragraph 6-6.15.3 could cause serious injury or death from antenna radiation or antenna movement.

1. Perform steps 1, 2, 3, 5, and 6 of paragraph 6-6.15.3 to shut down antenna/pedestal.

**WARNING**

Failure to place the pedestal PWR ON/SAFE Safety Interlock Switch to the SAFE position could cause serious injury or death.

2. At the azimuth housing, ensure the PWR ON/SAFE Safety Interlock Switch is set to the SAFE position.

**WARNING**

Failure to move azimuth and elevation stow pins from OPERATE to STOW could cause serious injury or death.

3. Ensure that the azimuth and elevation stow pins are in STOW.

**WARNING**

The technician who climbs the ladder is responsible for putting on the safety harness and hooking it to a safe secure position after ascending the 20-foot ladder.

6-5.52.6.3 Replacement Procedure.

**NOTES**

See Figure 6-37 sheet 1 for Limited Production Phase (LPP) or sheet 2 for Full Scale Production (FSP) before replacing elevation stow pin switch.

Another technician must climb inside the elevation housing and assist in removing and replacing the stow pin switch.

1. Don safety harness prior to ascending ladder.
2. Place ladder above elevation access door and have one technician climb to the top of the pedestal.
3. Ensure that technician wearing safety harness is secured to pedestal prior to starting removal procedure.
4. Remove the elevation inspection cover at the top of the elevation housing using the proper screwdriver and set it aside.
5. Place ladder below the elevation housing access door.

**NOTE**

You will be entering a confined space, non-permit required. This means the confined space does not contain any atmospheric hazards capable of causing death or serious physical harm.

6. Open elevation housing access door.
7. Have the other technician enter the elevation housing and remove the defective stow pin switch cable from the cable clamp and TB1 using the proper screwdriver.
8. Remove the protective plug covering the defective stow pin switch and set aside.
9. If the antenna has been stowed in elevation, remove the ball lock pin from the STOW hole of the defective switch and let it dangle.
10. Unscrew and remove the stow pin switch locking sleeve, located in front of the securing nut, using the needlenose pliers and set aside.

11. Have the other technician hold the switch body inside the elevation housing while removing the securing nut and washers using the proper tools and set aside.

12. Have the other technician remove the switch from inside the elevation housing and set aside.

13. Install replacement switch by reversing steps 4 through 11.

**NOTE**

Visually inspect roller on switch to ensure it is vertically positioned, then install stow pin to assure smooth operation.

14. Have the technicians climb down and secure safety harness and ladder.

15. Perform steps 1 through 15 of paragraph 6-6.16.3 to turn on antenna/pedestal.

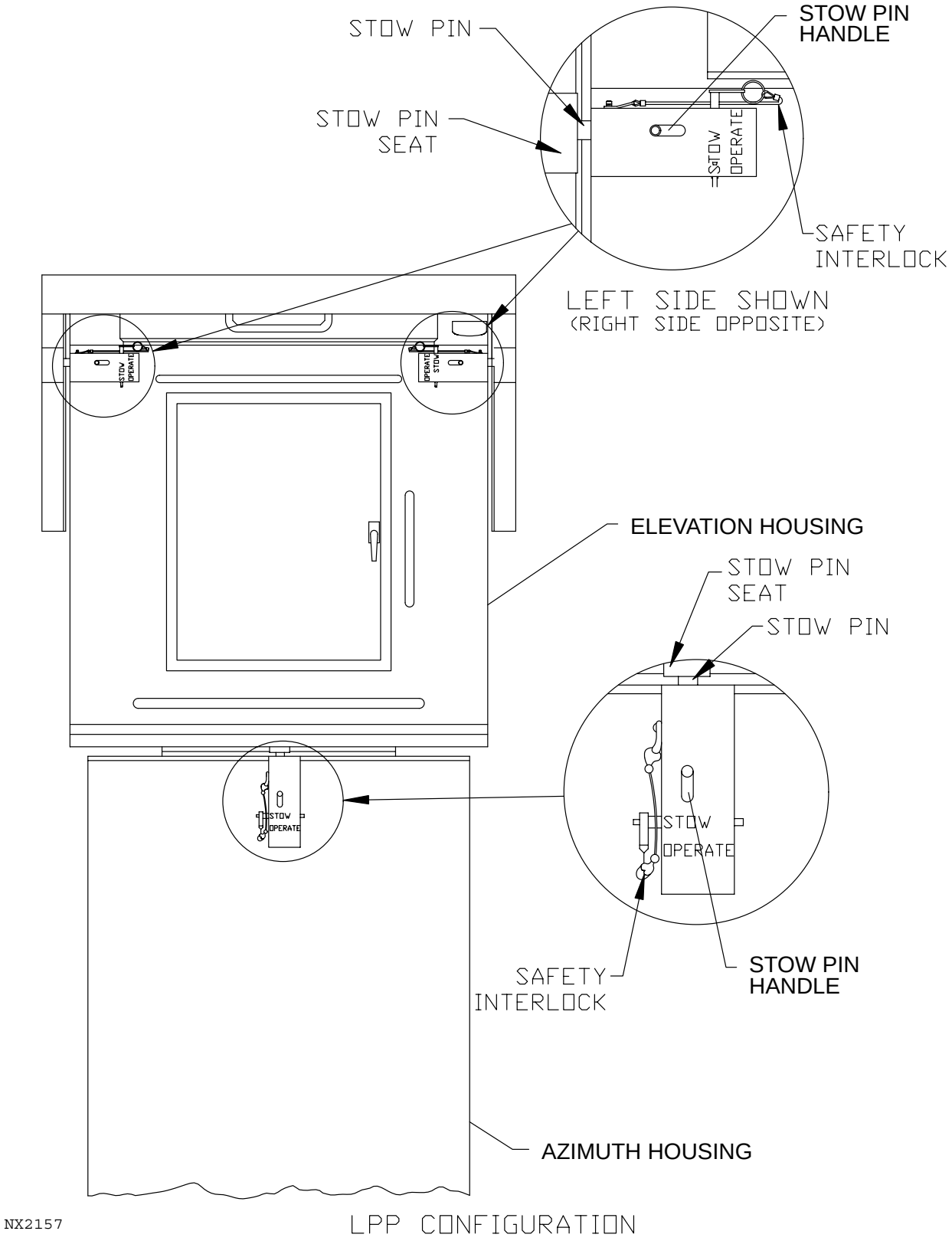


Figure 6-37. Pedestal Stow Pins Engaged (Sheet 1 of 2)

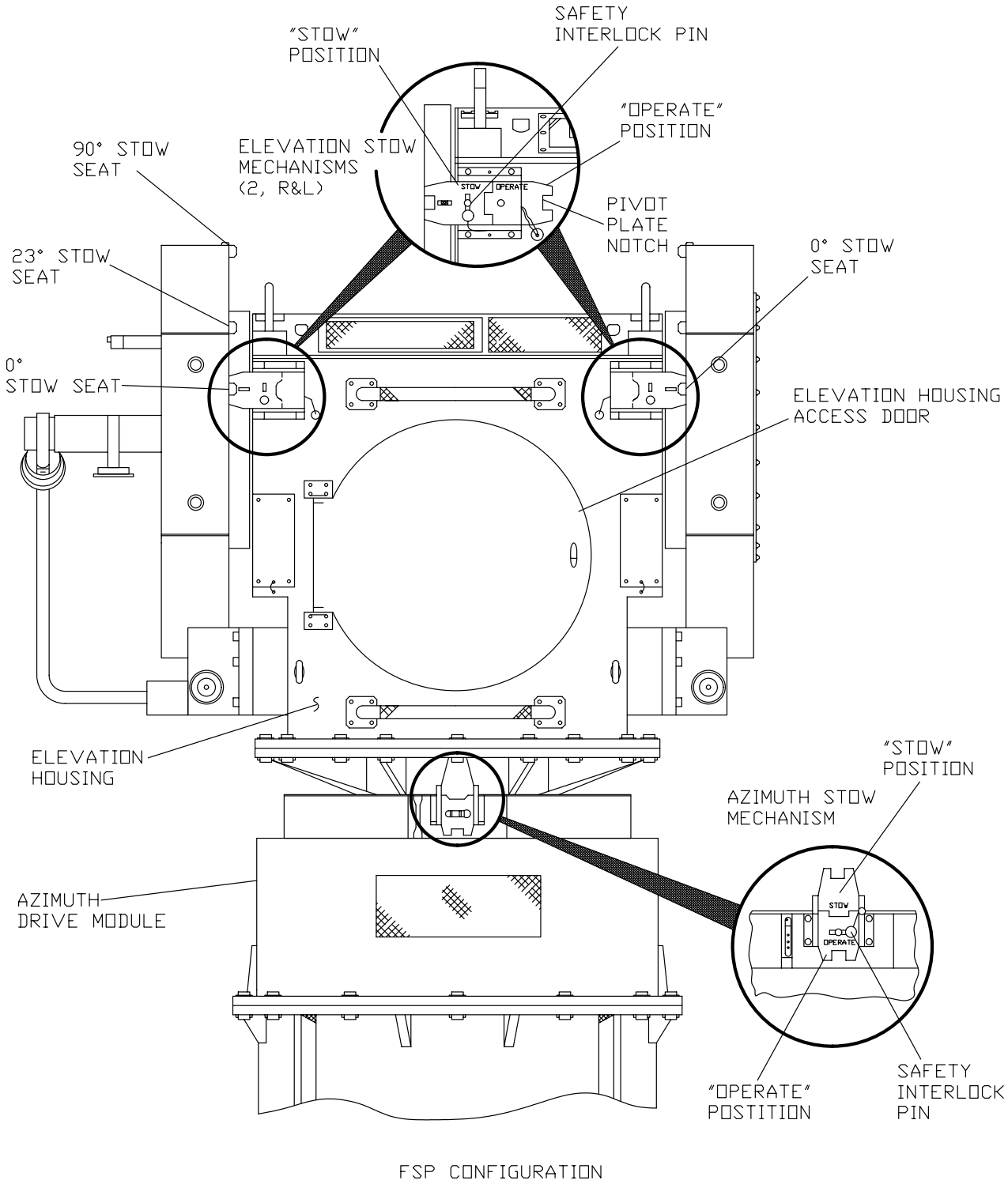


Figure 6-37. Pedestal Stow Pins Engaged (Sheet 2 of 2)

6-5.52.7 Azimuth Manual Drive Assembly UD2A1A3A1 Replacement Procedure.

Two technicians are required for this procedure.

6-5.52.7.1 Equipment and Tools Required.

1. Wrench set, ball hex
2. Screwdriver set, flat-tip
3. Needlenose pliers, 6-inch (extra long nose, slim)
4. Socket set, 3/8-inch drive (deep well)
5. Ratchet wrench, 3/8-inch drive and extension
6. Solder scribe.

6-5.52.7.2 Initial Conditions/Preliminary Setup.

**WARNING**

Failure to perform applicable shutdown steps in paragraph 6-6.15.3 could cause serious injury or death from antenna radiation or antenna movement.

1. Perform steps 1, 2, 3, 5, and 6 of paragraph 6-6.15.3 to shut down antenna/pedestal.

**WARNING**

Failure to place the pedestal PWR ON/SAFE Safety Interlock Switch to the SAFE position could cause serious injury or death.

2. At the azimuth housing, ensure the PWR ON/SAFE Safety Interlock Switch is set to the SAFE position.

**WARNING**

Failure to move azimuth and elevation stow pins from OPERATE to STOW could cause serious injury or death.

3. Ensure that the azimuth and elevation stow pins are in STOW.

6-5.52.7.3 Replacement Procedure.

**NOTES**

See Figure 6-35 and Figure 6-36 for replacing the azimuth manual drive stow pin switches.

You will be entering a confined space, non-permit required. This means the confined space does not contain any atmospheric hazards capable of causing death or serious physical harm.

1. Open azimuth housing access door (LPP) or remove access cover plate (FSP) and climb up to gain access to the manual drive.
2. Remove the stow pin switch cable from the cable clamp and TB1 using the proper screwdriver.

**NOTE**

See Figure 6-38 before replacing the manual drive.

3. Remove the screws and washers from the manual drive assembly using the proper hex wrench.
4. Remove the manual drive assembly from the azimuth drive motor and climb down to the radome floor.
5. Remove keyed retaining ring from locking sleeve.
6. Unscrew and remove the stow pin switch locking sleeve, located in front of the securing nut, using the needle nose pliers and set aside.
7. Remove the securing nut and washers using the proper tools and set aside.
8. Push switch through opening of manual drive assembly and set drive aside.
9. Install switch in replacement drive by reversing steps 6 through 8.

**NOTE**

Ensure stow pin switch roller is aligned with stow pin holder.
Ensure proper stow pin switch operation using a voltmeter.

10. Install manual drive by reversing steps 1 through 5.
11. Perform steps 1 through 15 of paragraph 6-6.16.3 to turn on antenna/pedestal.

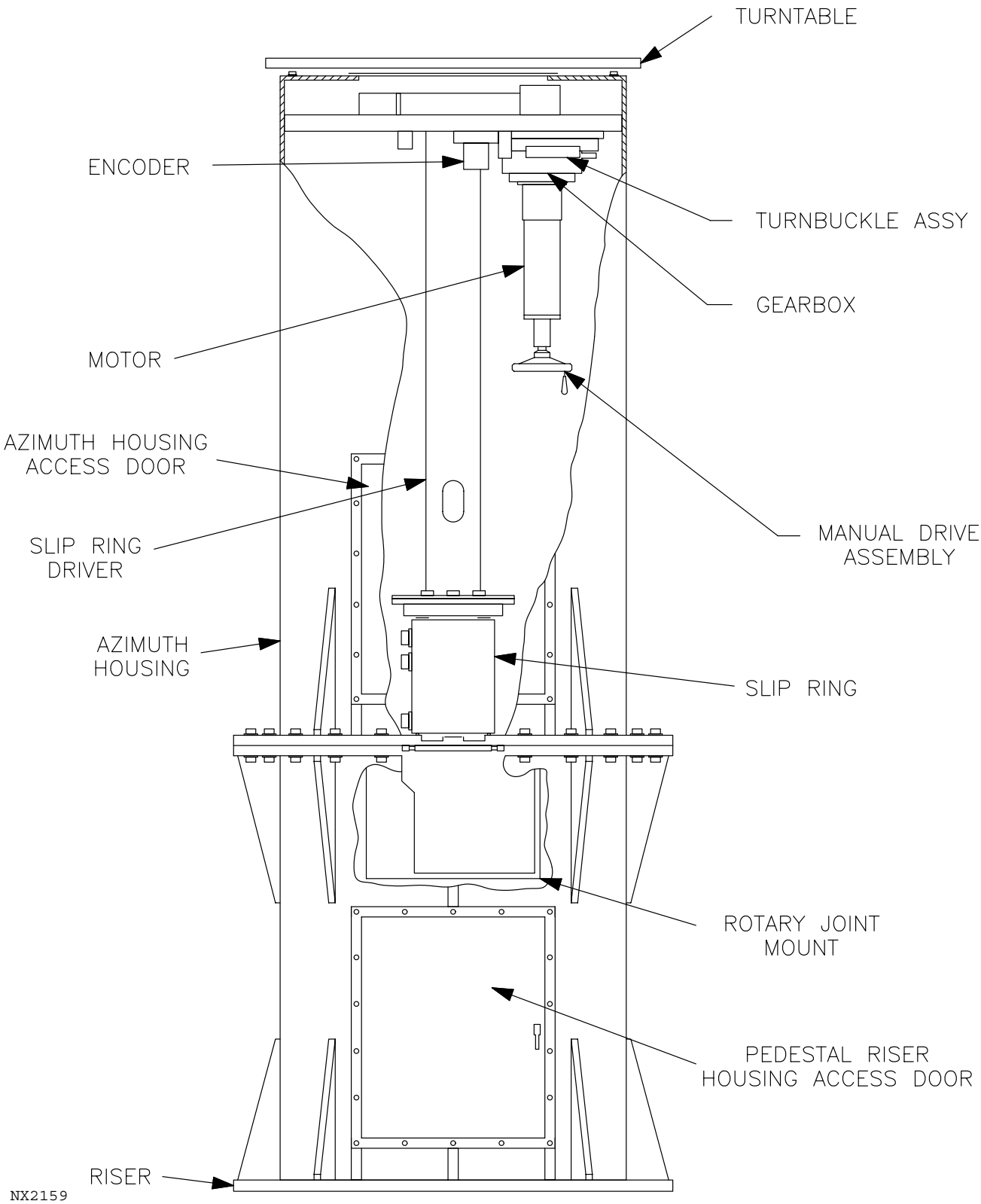


Figure 6-38. Azimuth Assembly

6-5.52.8 Azimuth Manual Drive Stow Pin Safety Interlock Switch UD2A1A3A1S1 Replacement Procedure.

Two technicians are required for this procedure.

6-5.52.8.1 Equipment and Tools Required.

1. Wrench set, ball hex
2. Screwdriver set, flat-tip
3. Needlenose pliers, 6-inch (extra long nose)
4. Socket set, 3/8-inch drive (deep well)
5. Ratchet wrench, 3/8-inch
6. Solder Scribe.

6-5.52.8.2 Initial Conditions/Preliminary Setup.

**WARNING**

Failure to perform applicable shutdown steps in paragraph 6-6.15.3 could cause serious injury or death from antenna radiation or antenna movement.

1. Perform steps 1, 2, 3, 5, and 6 of paragraph 6-6.15.3 to shut down antenna/pedestal.

**WARNING**

Failure to place the pedestal PWR ON/SAFE Safety Interlock Switch to the SAFE position could cause serious injury or death.

2. At the azimuth housing, ensure the PWR ON/SAFE Safety Interlock Switch is set to the SAFE position.

**WARNING**

Failure to move azimuth and elevation stow pins from OPERATE to STOW could cause serious injury or death.

3. Ensure that the azimuth and elevation stow pins are in STOW.

6-5.52.8.3 Replacement Procedure.

**NOTES**

See Figure 6-35 for replacing azimuth manual drive stow pin safety interlock switches.

You will be entering a confined space, non-permit required. This means the confined space does not contain any atmospheric hazards capable of causing death or serious physical harm.

1. Open azimuth housing access door (LPP) or remove access cover plate (FSP) and climb up to gain access to the azimuth drive.
2. Remove the defective stow pin switch cable from the cable clamp and TB1 using the proper screwdriver.

**NOTE**

Refer to Figure 6-35 for replacing manual drive assembly.

3. Remove the screws and washers from the manual drive assembly using the proper hex wrench.
4. Remove the manual drive assembly from the azimuth drive motor and climb down to the radome floor to work on assembly.
5. Unscrew and remove the safety interlock switch locking sleeve, located in front of the securing nut, using the needlenose pliers and set aside.
6. Remove the securing nut and washers using the proper tools and set aside.
7. Push switch through opening of manual drive assembly and set aside.
8. Install replacement switch by reversing steps 5 through 7.
9. Install manual drive assembly by reversing steps 1 through 4.
10. Perform steps 1 through 15 of paragraph 6-6.16.3 to turn on antenna/pedestal.

6-5.52.9 Azimuth Data Package UD2A1A3A2 and Azimuth Encoder UD2A1A3A2A1 Replacement Procedure.

Two technicians are required for this procedure.

6-5.52.9.1 Equipment and Tools Required.

1. Wrench set, socket, 3/8-inch drive, 1/2-inch drive
2. Wrench set, combination
3. Socket set, hex-head driver, 3/8-inch drive
4. Wrench, torque, 0-50 lb-ft, 3/8-inch drive
5. Wrench set, hex key
6. Screwdriver set, flat-tip
7. Pliers, diagonal
8. NWS EHB 6-513 (LPP) or NWS EHB 6-514 (FSP) Pedestal System manual.

6-5.52.9.2 Initial Conditions/Preliminary Setup.

**WARNING**

Failure to perform applicable shutdown steps in paragraph 6-6.15.3 could cause serious injury or death from antenna radiation or antenna movement.

1. Perform steps 1, 2, 3, 5, and 6 of paragraph 6-6.15.3 to shut down antenna/pedestal.

**WARNING**

Failure to place the pedestal PWR ON/SAFE Safety Interlock Switch to the SAFE position could cause serious injury or death.

2. At the azimuth housing, ensure the PWR ON/SAFE Safety Interlock Switch is set to the SAFE position.

**WARNING**

Failure to move azimuth and elevation stow pins from OPERATE to STOW could cause serious injury or death.

3. Ensure that the azimuth and elevation stow pins are in STOW.

6-5.52.9.3 Replacement Procedure.

**NOTE**

You will be entering a confined space, non-permit required. This means the confined space does not contain any atmospheric hazards capable of causing death or serious physical harm.

1. Locate the azimuth data package.
2. If applicable, perform Azimuth Encoder Replacement per NWS EHB 6-513*/6-514* paragraph 2-4.4.4.
3. If Azimuth Encoder was replaced, perform Azimuth Encoder alignment per paragraph 6-6.17.3 .
4. If applicable, perform Azimuth Data package replacement per NWS EHB 6-513*/6-514* paragraph 2-4.4.11.
5. Remove all tools and material from the azimuth housing.
6. Perform steps 1 through 15 of paragraph 6-6.16.3 to turn on antenna/pedestal.

6-5.52.10 Azimuth Gearbox UD2A1A3A3 Replacement Procedure.

Four technicians are required for this procedure.

- - - - -

* Site dependent

6-5.52.10.1 Equipment and Tools Required.

1. Screwdriver set, flat-tip
2. Screwdriver set, Phillips-tip
3. Wrench, combination, 1-5/8 inch
4. Wrench, torque, 15-100 ft-lb, 3/8-inch drive
5. Wrench, torque, 10-100 ft-lb, 1/2-inch drive
6. Ratchet, 3/8-inch drive
7. Wrench set, adjustable
8. Extension, 3/8-inch drive, 6-inch
9. Socket set, hex-head driver
10. Teflon tape
11. Jacking screws, 0.25-20 UNC-2A (Qty 3)
12. Lifting eye, with six-inch shank, 0.375-24 UNF-2A
13. Oil line drain attachment with 15 foot hose, Tedeco 3F6132 or equivalent
14. Hose, drain, 1/2-inch internal diameter
15. Pump, electric

**NOTE**

For sites where the operating temperature falls to -40 degrees Celsius for extended periods of time use either: Tribolube L-3 Synthetic Gear Oil by Aerospace Lubricants, Inc., Columbus, Ohio 43212 (Cage Code 66164) or, Synthetic Gear Oil part number 1011358 by Radiation Systems, Inc., Largo, Florida 34643 (Cage Code 1M813). Note: Operation below -40 degrees Celsius exceeds the design criteria of many items of equipment in the radome.

16. Oil, 15 gallons SCH 75W synthetic or for sites where the operating temperature falls to -40 degrees Celsius for extended periods of time use either Tribolube L-3 Synthetic Gear Oil by Aerospace Lubricants, Inc. or Synthetic Gear Oil by Radiation Systems, Inc.
17. Containers, empty 5-gallon (Qty 3)
18. Rope, 30 feet
19. Panels, cloth, non-lint, oil absorbent

20. Gearbox O-ring 5-069N674-70
21. Grease MIL-G-23827
22. Ladder, 20-foot extension
23. Four pairs rubber gloves and protective clothing
24. Harness, safety
25. Davit hoist with sling.

6-5.52.10.2 Initial Conditions/Preliminary Setup.

**WARNING**

Failure to perform applicable shutdown steps in paragraph 6-6.15.3 could cause serious injury or death from antenna radiation or antenna movement.

1. Perform steps 1, 2, 3, 5, and 6 of paragraph 6-6.15.3 to shut down antenna/pedestal.

**WARNING**

Failure to place the pedestal PWR ON/SAFE Safety Interlock Switch to the SAFE position could cause serious injury or death.

2. At the azimuth housing, ensure the PWR ON/SAFE Safety Interlock Switch is set to the SAFE position.

**WARNING**

Failure to move azimuth and elevation stow pins from OPERATE to STOW could cause serious injury or death.

3. Ensure that the azimuth and elevation stow pins are in STOW.

**WARNING**

The technician who climbs the ladder is responsible for putting on the safety harness and hooking it to a safe secure position after ascending the 20-foot ladder.

4. To set up Davit hoist, refer to paragraph 6-5.1.4 .

6-5.52.10.3 Replacement Procedure.

1. Don safety harness prior to ascending ladder.
2. Place ladder above elevation access door and have one technician climb to the top of the pedestal.

3. Ensure that technician wearing safety harness is secured to pedestal prior to starting removal procedure.
4. Raise the lifting fixture to the top of the pedestal using the 30-foot rope, and set it in place in the Davit tube closest to the elevation gearbox (left side).
5. Remove the elevation inspection cover at the top of the elevation housing using the proper screwdriver, and set it aside.

**WARNING**

Do not allow any person to stand directly beneath an object being raised or lowered from the pedestal.

6. Remove the small elevation access cover in the bottom of the elevation housing using the proper screwdriver, and set it aside.
7. Remove the azimuth gearbox lift access cover located below the elevation access cover using the proper hex-head driver, and set the cover and gasket aside.

**WARNING**

Temperature of the oil can exceed 150°F. Contact with oil may result in personnel injury. Wear gloves and protective clothing when handling oil fittings and hose. Do not overfill the oil collection container.

**NOTE**

You will be entering a confined space, non-permit required. This means the confined space does not contain any atmospheric hazards capable of causing death or serious physical harm.

8. Have a technician enter the azimuth housing and locate the azimuth bearing oil reservoir drain plug (see Figure 6-39, sheet 1 for LPP sites or sheet 2 for FSP sites).

**NOTE**

Before draining the oil from the reservoir and gearbox, have all tools, containers, hoses, and the drain fitting ready to minimize any oil leakage.

9. Place the drain hose into an empty 5-gallon container, remove magnetic drain plug from the female drain receptacle in the azimuth housing using the proper socket, extension and ratchet, then quickly insert hose fitting into the female drain receptacle.
10. Screw the hose fitting into the drain plug until the oil flows freely into the container.
11. When the container is almost full, unscrew the hose fitting until the oil stops.

12. Put the drain hose into another empty 5 gallon container and repeat steps 10 and 11 until the reservoir is empty.

13. After the reservoir has drained completely, remove the drain hose from the female drain receptacle.

14. Remove any metal chips or dirt from the magnetic drain plug using the cloth panels.

15. Install the magnetic drain plug in the female drain receptacle using the proper wrench.

16. Locate the oil residue drain plug located on the azimuth gearbox assembly (See Figure 6-39, sheet 1 for LPP sites or sheet 2 for FSP sites).

17. Remove plug using the proper wrench, and drain the residue oil (approximately one pint) into an empty container.

18. After completely draining all gearbox oil residue, remove the drain hose from the drain receptacle.

19. Remove any metal chips or dirt from the drain plug/gearbox housing threads, using the cloth panels.

20. Install the oil residue drain plug using the proper wrench.

21. Repeat steps 16 through 20 for the data package residue drain.

22. Locate and open the gearbox expansion chamber relief valve.

23. Connect one end of the drain hose to the gearbox drain/fill valve and place the other end in the oil collection container (see Figure 6-39).

24. Open the drain/fill valve by rotating the knurled grip 30 degrees clockwise, pushing in and locking in place.

25. After draining the gearbox completely, close the drain/fill valve by pushing in, turning counter-clockwise to unlock, then rotating the knurled grip 30 degrees counter-clockwise until it stops.

26. Remove the drain hose and clean any metal chips or dirt from the drain/fill valve fitting using the cloth panels.

**WARNING**

Before removing/replacing the azimuth gearbox, the oil sensor, expansion chamber, and expansion chamber relief valve are removed to prevent possible damage to them.

27. Disconnect the azimuth gearbox oil level sensor cable, remove sensor from gearbox using the 1-5/8 inch hexagon box wrench, and set it in a safe place.

28. Disconnect the drive motor control and power connectors.

29. Remove the manual drive assembly from the drive motor using the proper hex-head driver socket and tie the drive to the harness clamp attached to the inside of the azimuth housing so it does not interfere with removing the gearbox.

30. In the azimuth housing, screw the lifting eye (0.375-24 UNF-2A) into the top of the output pinion of the azimuth gearbox. (See Figure 6-40).

31. Connect the Davit hoist to the lifting eye and take up all slack in the cable.

32. Break seating torque on the gearbox mounting screws by rotating each screw one full turn counter-clockwise using the proper hex-head driver, socket, and driver.

33. Turn the turnbuckle using the proper wrench to rotate the gearbox in the "Disengage" direction. The output pinion is fully disengaged when the turnbuckle stops rotating.

34. In the azimuth housing, remove the quick-release pin from the backlash bracket and swing the turnbuckle away from the gearbox.

35. Install three jacking screws (0.25-20 UNC-2A) into the holes provided in the gearbox mounting flange.

36. Remove the gearbox mounting screws using the proper hex-head driver socket.

**NOTE**

Have the technician at the lifting device slowly release tension on the gearbox as the jacking screws are turned to unseat the gearbox. Do not release all the tension on the gearbox.

37. Alternately turn jacking screws and unseat gearbox.

**WARNING**

Three people are required to safely guide the gearbox/motor through the azimuth access door and to the floor.

38. Lower gearbox/motor through housing and remove through access door. Keep cables clear of all obstacles.

**NOTE**

See Figure 6-40 before doing steps 39 through 42.

39. Lower gearbox/motor to floor and remove cable and lifting eye.

40. Locate the motor shaft key access hole in the motor adapter.

41. Rotate motor rear shaft until the setscrew is visible through the access hole. Loosen the setscrew nearest the motor using the proper screwdriver.

42. Remove motor and adapter from faulty gearbox using the proper hex-head driver socket.

43. Remove motor adapter from motor.

44. Remove motor adapter from replacement gearbox and install on motor. Tighten each screw to 8 ft-lbs.

45. Remove coupling and key from defective gearbox and install on replacement gearbox. Tighten two setscrews.

46. Align motor shaft key with coupling keyway. Guide motor shaft into coupling until motor adapter flange is seated on gearbox.

47. Mount motor and adapter to gearbox with six 5/16-18 SAE grade screws. Torque each screw to 11 foot-pounds (132 in-lb) using the torque wrench and 5/16-inch hex-head driver socket.

48. Rotate rear motor shaft to align coupling setscrews with access holes in motor adapter. Tighten motor shaft setscrew.

49. Install gearbox O-ring seal onto replacement gearbox using grease MIL-G-23827 on O-ring.

50. Record the gearbox backlash as specified on nameplate located on gearbox housing. This value will be used during the backlash setting.

51. Install the lifting eye (0.375-24 UNF-2A) into the top of the output pinion of the replacement azimuth gearbox/motor and connect to Davit hoist cable.

52. Slowly raise the gearbox/motor through the azimuth housing and position gearbox so that it is fully disengaged from the turntable bearing bullgear before seating gearbox in mating pilot.

53. Slowly seat gearbox into mating pilot and install the mounting screws using the proper tools.

54. Torque the five 5/8-18 SAE Grade 8 gearbox mounting screws to 50 foot-pounds using the torque wrench and 5/8-inch hex-head driver. Then break seating torque by rotating each screw 1/2 counter-clockwise turn using hex socket with socket wrench.

55. Connect turnbuckle to the backlash bracket and insert the quick-release pin.

56. Remove Davit hoist cable and the gearbox lifting eye.

57. Remove plug from gearbox oil level sensor port. Install oil level sensor O-ring in gearbox.

58. Connect the azimuth gearbox oil level sensor cable.

59. Open the oil overfill tube petcock valve.

60. Connect one end of the fill hose to the gearbox drain/fill valve and the other end to the manual/electric oil pump.

61. Open the drain/fill valve by rotating the knurled grip 30 degrees clockwise, pushing in and locking in place.

62. Place 1-pint container under oil overfill tube petcock valve.

**CAUTION**

Use only the oil specified in paragraph 6-5.52.10.1 of this manual. Using the wrong oil will seriously damage the gearbox.

63. Fill the gearbox slowly until oil drains through overfill tube into container.

64. Stop filling oil and close the drain/fill valve (petcock).

65. Close the oil overfill tube petcock valve.

66. Remove magnetic drain plug from the female drain receptacle in the azimuth housing using the proper socket, extension, and ratchet.

67. Connect one end of the fill hose to the female drain receptacle and the other end to the electric pump.

68. Connect hose to electric pump and insert other end into a container of new oil.

69. Fill the oil reservoir until the oil covers half of the oil level sight glass (See Figure 6-39, sheet 1 for LPP sites or sheet 2 for FSP sites) of the azimuth housing. Also have the technician in the elevation housing check the oil level through the lift access cover to prevent overfilling the reservoir.

70. Remove fill hose from female drain receptacle, install drain plug, and tighten using the proper socket, extension, and ratchet.

71. Install the azimuth gearbox lift access cover and gasket located below the elevation access cover using the proper Allen wrench.

72. Install the small elevation access cover in the bottom of the elevation housing using the proper screwdriver.

73. Install the elevation inspection cover using the proper screwdriver.

74. Remove the lifting fixture from the top of the pedestal and lower to the radome floor, using the 30-foot rope.

75. Have the technician on top of the pedestal climb down and remove safety harness and ladder.

76. Close the elevation housing access door.

77. Connect the gearbox drive motor control and power cables.

78. Perform the azimuth backlash setting procedures in the pedestal manual NWS EHB 6-513*/NWS EHB 6-514*, paragraph 2-4.4.2.4.

79. Clean up oil spills using the cloth panels.

80. Remove all tools and material from the azimuth housing.

81. Close/install the azimuth access door/cover plate.

82. Perform steps 1 through 15 of paragraph 6-6.16.3 to turn on antenna/pedestal.

- - - - -

* Site dependent

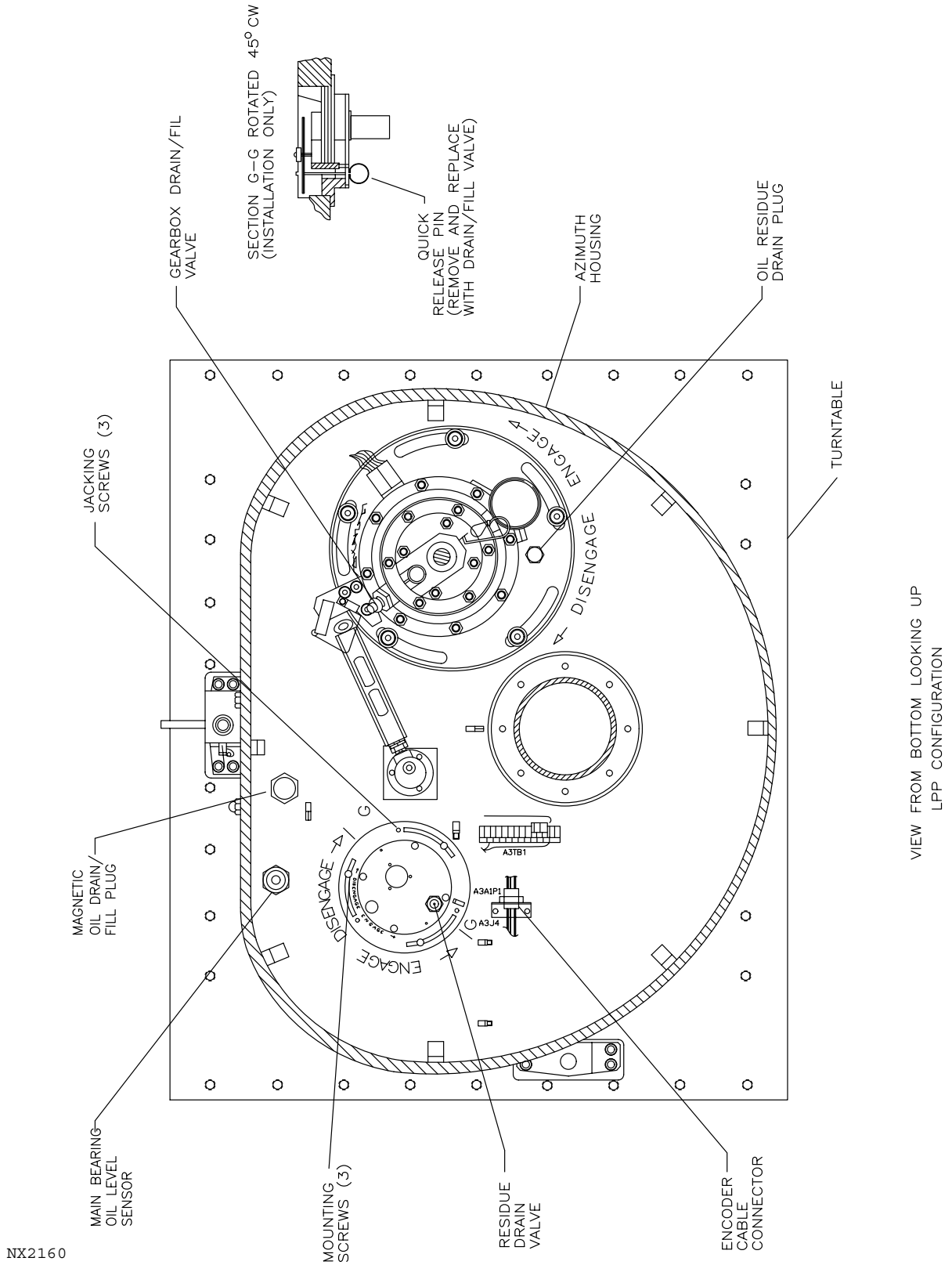


Figure 6-39. Azimuth Gearbox/Data Package (Sheet 1 of 2)

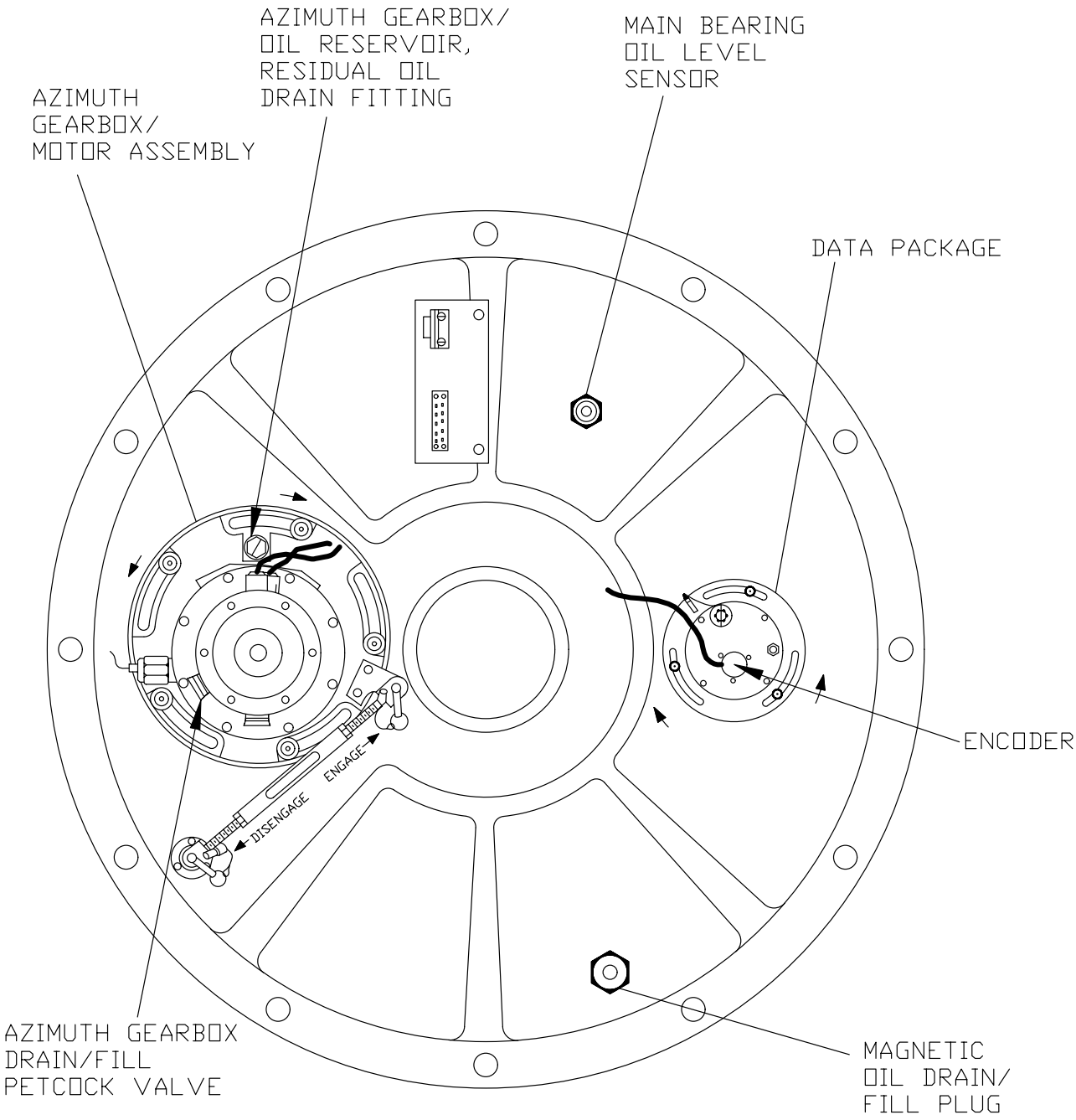


AZIMUTH DRIVE MODULE
(VIEW LOOKING UP AT INSIDE
OF MODULE HOUSING)

NX2161

FSP CONFIGURATION

Figure 6-39. Azimuth Gearbox/Data Package (Sheet 2 of 2)

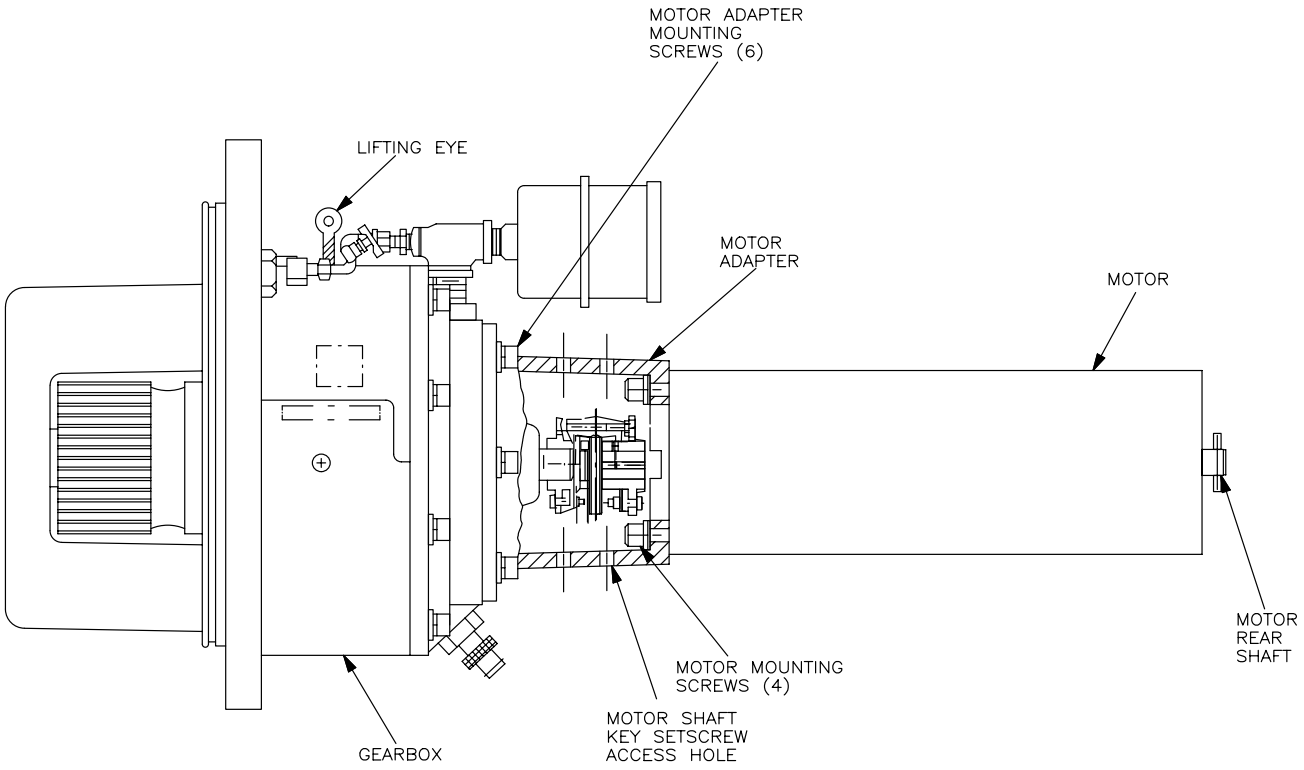


NX2162

Figure 6-40. Azimuth Gearbox Motor Removal/Installation

6-5.52.1 1 Azimuth Gearbox Drive Motor UD2A1A3B1 Replacement Procedure.

Two technicians are required for this procedure.

6-5.52.1 1.1 Equipment and Tools Required.

1. Sockets, 3/8-inch drive, 3/8-inch hex-head drive, 5/16-inch hex-head drive
2. Ratchet, 3/8-inch drive
3. Wrench, torque, 15-100 ft-lb, 3/8-inch
4. Screwdriver set, Phillips-tip
5. Wrench, torque, 30-200 in-lb.

6-5.52.1 1.2 Initial Conditions/Preliminary Setup.

**WARNING**

Failure to perform applicable shutdown steps in paragraph 6-6.15.3 could cause serious injury or death from antenna radiation or antenna movement.

1. Perform steps 1, 2, 3, 5, and 6 of paragraph 6-6.15.3 to shut down antenna/pedestal.

**WARNING**

Failure to place the pedestal PWR ON/SAFE Safety Interlock Switch to the SAFE position could cause serious injury or death.

2. At the azimuth housing, ensure the PWR ON/SAFE Safety Interlock Switch is set to the SAFE position.

**WARNING**

Failure to move azimuth and elevation stow pins from OPERATE to STOW could cause serious injury or death.

3. Ensure that the azimuth and elevation stow pins are in STOW.

6-5.52.1 1.3 Replacement Procedure.

**NOTE**

You will be entering a confined space, non-permit required. This means the confined space does not contain any atmospheric hazards capable of causing death or serious physical harm.

1. Open azimuth housing access door (LPP) or remove access cover plate (FSP).

2. Have a technician enter the azimuth housing.
3. Disconnect the azimuth drive motor control and power cables.
4. Remove the manual drive from the drive motor using the proper hex-head driver socket and tie the drive to the harness clamp attached to the inside of the azimuth housing so it does not interfere with the gearbox.

**NOTE**

See Figure 6-40 before doing steps 5 and 6.

5. Locate the motor shaft key access hole in the motor adapter.
6. Rotate motor rear shaft until the setscrew is visible through the access hole. Loosen the setscrew using the proper screwdriver.

**NOTE**

Two people are required to safely remove and replace the drive motor.

7. Remove faulty motor and adapter from gearbox using the proper hex-head driver socket, and lower to radome floor.
8. Remove adapter from faulty motor using the proper hex-head socket and set it aside.
9. Remove coupling key from faulty motor shaft.
10. Insert key into keyway of replacement motor shaft.
11. Attach motor adapter to replacement motor using the proper hex-head driver socket. Torque to 20 foot-pounds.
12. Raise new drive motor and adapter up to the azimuth housing, being careful not to damage equipment.
13. Align motor shaft/key with coupling keyway and guide motor shaft into coupling until motor adapter flange is seated on gearbox.
14. Mount motor and adapter to gearbox and torque to 11 foot-pounds (132 in-lb) using the proper tools.
15. Rotate rear motor shaft to align coupling setscrews with access holes in motor adapter. Tighten motor shaft setscrews.
16. Mount manual drive to the drive motor using the proper hex-head driver socket, and torque to 11 foot-pounds using the proper tools.
17. Connect the gearbox drive motor control/power cables.
18. Perform steps 1 through 15 of paragraph 6-6.16.3 to turn on antenna/pedestal.

6-5.52.12 Azimuth Stow Pin Switch UD2A1A3S2 (LPP) or UD2A1A3A8S1 (FSP) Replacement Procedure.

Two technicians are required for this procedure.

6-5.52.12.1 Equipment and Tools Required.

1. Screwdriver set, flat-tip
2. Socket set, 3/8-inch drive (deep well)
3. Needlenose pliers, 6-inch
4. Wrench, 3/8-inch ratchet.

6-5.52.12.2 Initial Conditions/Preliminary Setup.

**WARNING**

Failure to perform applicable shutdown steps in paragraph 6-6.15.3 could cause serious injury or death from antenna radiation or antenna movement.

1. Perform steps 1, 2, 3, 5, and 6 of paragraph 6-6.15.3 to shut down antenna/pedestal.

**WARNING**

Failure to place the pedestal PWR ON/SAFE Safety Interlock Switch to the SAFE position could cause serious injury or death.

2. At the azimuth housing, ensure the PWR ON/SAFE Safety Interlock Switch is set to the SAFE position.

**WARNING**

Failure to move azimuth and elevation stow pins from OPERATE to STOW could cause serious injury or death.

3. Ensure that the azimuth and elevation stow pins are in STOW.

6-5.52.12.3 Replacement Procedure.

**NOTES**

See Figure 6-41 sheet 1 for LPP sites or sheet 2 for FSP sites before replacing the azimuth stow pin switch.

Another technician must climb into the azimuth housing and assist in removing and replacing the stow pin switch.

**NOTE**

You will be entering a confined space, non-permit required. This means the confined space does not contain any atmospheric hazards capable of causing death or serious physical harm.

1. Open azimuth housing access door (LPP) or remove access cover plate (FSP).
2. Have technician inside azimuth housing remove the stow pin switch cable from the cable clamp and TB1 using the proper screwdriver.
3. Place ladder under the azimuth housing, climb up, remove the protective plug covering the stow pin switch and set aside.
4. If the antenna has been stowed in azimuth, remove the ball lock pin from the STOW hole and let it dangle.
5. Unscrew and remove the stow pin switch locking sleeve, located in front of the securing nut, using the needle nose pliers and set it aside.
6. Have the other technician hold the switch body inside the azimuth housing while removing the securing nut and washers using the proper tools and set them aside.
7. Have the other technician remove the switch from inside the azimuth housing and set it aside.
8. Install replacement switch by reversing steps 2 through 7.

**NOTE**

Visually inspect roller on switch to ensure it is horizontally positioned, then install stow pin to ensure smooth operation.

9. Technicians will remove all tools and equipment, exit azimuth housing, and then secure the azimuth housing cover/door.
10. Perform steps 1 through 15 of paragraph 6-6.16.3 to turn on antenna/pedestal.

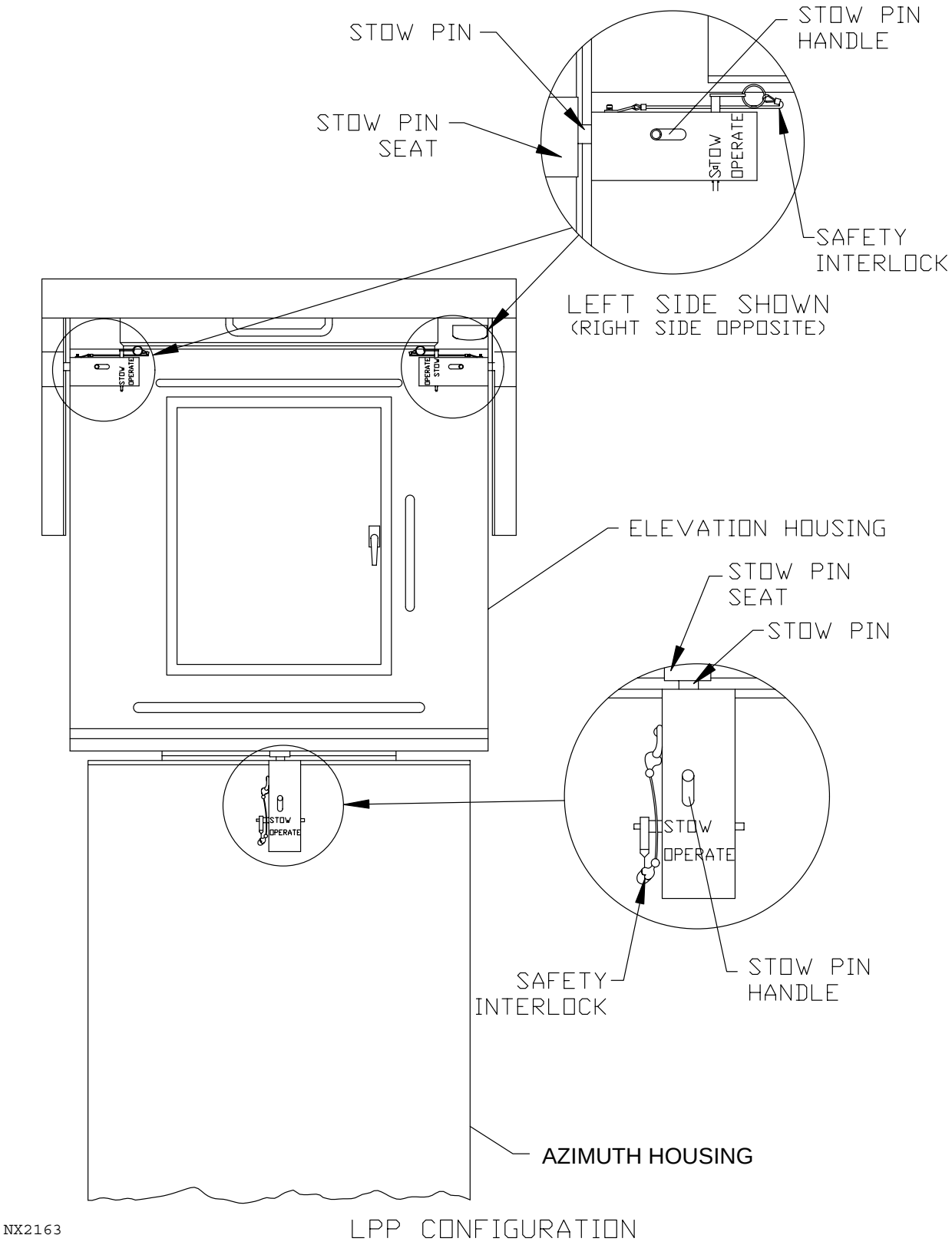


Figure 6-41. Pedestal Stow Pins Engaged (Sheet 1 of 2)

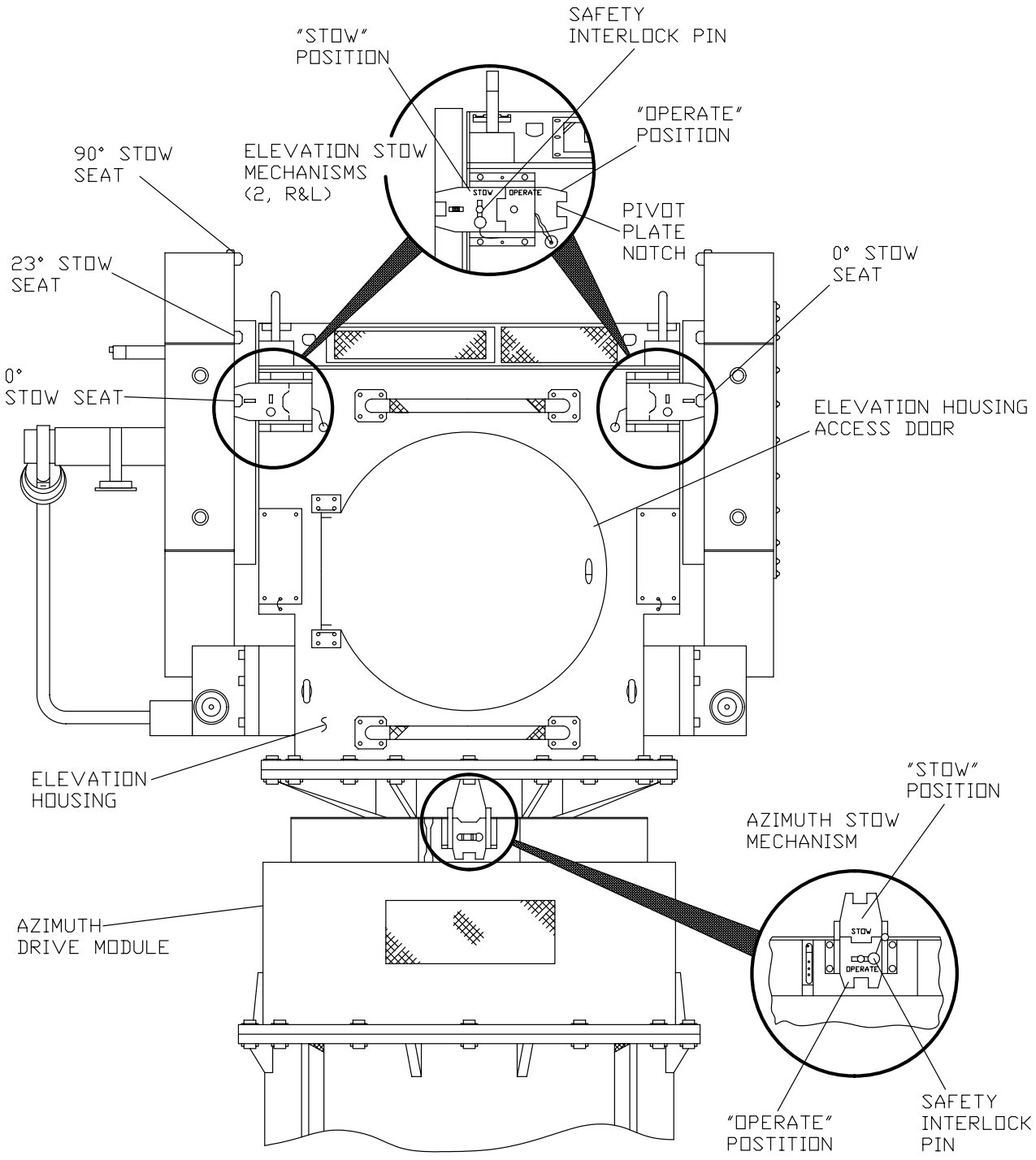


Figure 6-41. Pedestal Stow Pins Engaged (Sheet 2 of 2)

6-5.52.13 Receiver Protector UD2A3 and UD2A7 or UD2A3A2 and UD2A7A2 Replacement Procedure.

Two technicians are required for this procedure.

6-5.52.13.1 Equipment and Tools Required.

1. Wrench set, combination
2. Wrench set, hex key
3. Pliers, 6-inch channel lock
4. Screwdriver set, flat-tip.

6-5.52.13.2 Initial Conditions/Preliminary Setup.

**WARNING**

Failure to perform applicable shutdown steps in paragraph 6-6.15.3 could cause serious injury or death from antenna radiation or antenna movement.

**NOTE**

Do not turn off Waveguide Unit Pressurization.

1. Perform steps 1, 2, 3, 5, and 6 of paragraph 6-6.15.3 to shut down antenna/pedestal.

**WARNING**

Failure to place the pedestal PWR ON/SAFE Safety Interlock Switch to the SAFE position could cause serious injury or death.

2. At the azimuth housing, ensure the PWR ON/SAFE Safety Interlock Switch is set to the SAFE position.

6-5.52.13.3 Replacement Procedure.

**NOTE**

You will be entering a confined space, non-permit required. This means the confined space does not contain any atmospheric hazards capable of causing death or serious physical harm.

1. Open pedestal riser housing access door (LPP) or remove access cover plate (FSP).

2. Disconnect RF cable 2W5/2W14* from Receiver Protector J3.
3. Disconnect cable 2W20/2W26* from Receiver Protector J4.
4. Disconnect cable 2W900/2W901* from Passive Diode Limiter UD2A3A1/2A7A1* at Receiver Protector J2.
5. Remove Passive Diode Limiter UD2A3A1/2A7A1* and set aside if only the Receiver Protector UD2A3A2/2A7A2* is being replaced.
6. Remove the LNA UD2A4/UD2A8* from the mounting bracket using the proper screwdriver.
7. Remove Bandpass Filter UD2A1A3FL1/2* from mounting bracket by removing five hex head bolts.
8. Remove Bandpass Filter mounting bracket from Receiver Protector by removing four screws and two hex head bolts.
9. Disconnect waveguide from Receiver Protector J1 using the proper hex wrench, and save gasket for reinstallation.
10. Remove the Receiver Protector assembly from the mounting brackets using the proper wrench, and remove it from the riser housing.
11. Place replacement Receiver Protector in the riser housing and attach it to the mounting brackets using the proper wrench.

**NOTE**

Ensure that waveguide flange and gasket are seated properly when performing the next step.

12. Connect waveguide to Receiver Protector J1 using the proper hex wrench, and reinstall saved gasket from step 9.
13. Attach Bandpass Filter mounting bracket to the Receiver Protector with the four screws and two hex head bolts removed in step 8.
14. Attach Bandpass Filter UD2A1A3FL1/2* to the mounting bracket with the five hex head bolts removed in step 7.
15. Attach the LNA to the mounting bracket using the proper screwdriver, and connect to the Bandpass Filter. Don’t fully tighten the four screws until the LNA is connected to the Bandpass Filter.
16. Install previously removed Passive Diode Limiter 2A3A1/2A7A1* if only the Receiver Protector 2A3A2/2A7A2* is being replaced.
17. Connect cable 2W900/2W901* to the Passive Diode Limiter at Receiver Protector J2.
18. Connect cable 2W20/2W26* to Receiver Protector J4.

- - - - -

* Redundant

19. Connect RF cable 2W5/2W14* to Receiver Protector J3.

20. Close the pedestal riser housing access door (LPP) or install access cover plate (FSP).

21. Perform steps 1 through 15 of paragraph 6-6.16.3 to turn on antenna/pedestal.

22. The following Receiver Adaptation data parameters are associated with the Receiver Protector 2A3/2A7* in combination with the Passive Limiter 2A3A1/2A7A1*:

| Parameter | Path Loss | Description | Typical Value (dB) |
|---|---|---|---|
| R72 | PL_2A3J3/ 2A7J3* | Path loss from J3 to J1. Cannot be measured directly. See paragraph 6-6.28.3.1 . | -20.00 |
| R73 | PL_2A3J1_2 /2A7J1_2* | Path loss from 2A3J1 to 2A3J2. | -1.00 |

Parameter R72 is the internal nominal 20 dB coupler in series with the test signals which are injected into the Receiver Protector at 2A3J3/2A7J3*. The path loss of R72 is critical to the proper Reflectivity calibration of the system. When the Receiver/Protector, Bandpass Filter, or cable 2W900/2W901* is replaced, the CW Test Path calibration of paragraph 6-6.28.3.1.2 steps 1 through 37 must be performed. Steps 28 through 36 must be performed regardless of the initial value of R72. This will result in a new measured path loss value for both R72 and R73. Enter the new values in current adaptation data per paragraph 6-6.29 .

**NOTE**

If only the Passive Limiter 2A3A1/2A7A1 is replaced, it is not necessary to update R72. If the replacement Passive Limiter passes the path loss requirement of paragraph 6-5.52.19 , it is not necessary to update R73 as it is not critical for Reflectivity calibration of the system.

23. If the R247 and R248 are non-zero values in Adaptation Data, this procedure is complete. However, if R247 and R248 are zero, then the values of R247 and R248 must be measured per paragraph 6-6.31 and Table 6-39.

6-5.52.14 Low Noise Amplifier (LNA) UD2A4 and UD2A8* Replacement Procedure.

Two technicians are required for this procedure.

6-5.52.14.1 Equipment and Tools Required.

Screwdriver set, flat-tip.

- - - - -

* Redundant

6-5.52.14.2 Initial Conditions/Preliminary Setup.

**WARNING**

Failure to perform applicable shutdown steps in paragraph 6-6.15.3 could cause serious injury or death from antenna radiation or antenna movement.

**NOTE**

Do not turn off Waveguide Pressurization Unit.

1. Perform steps 1, 2, 3, 5, and 6 of paragraph 6-6.15.3 to shut down antenna/pedestal.

**WARNING**

Failure to place the pedestal PWR ON/SAFE Safety Interlock Switch to the SAFE position could cause serious injury or death.

2. At the azimuth housing, ensure the PWR ON/SAFE Safety Interlock Switch is set to the SAFE position.

6-5.52.14.3 Replacement Procedure.

**NOTE**

You will be entering a confined space, non-permit required. This means the confined space does not contain any atmospheric hazards capable of causing death or serious physical harm.

1. Open pedestal riser housing access door (LPP) or remove access cover plate (FSP).
2. Disconnect cables 2W6/2W15* and 2W20/2W26* from LNA connector J2.
3. Remove the four screws securing the LNA to the mounting bracket.
4. Disconnect LNA from Type-N adapter connected to Bandpass Filter UD2A1A3FL1/2* at LNA input (UD2A4J1/UD2A8J1*).
5. Install replacement LNA and reconnect it to adapter connected to Bandpass Filter.

**NOTE**

Don’t fully tighten screws securing the LNA until Bandpass Filter is attached.

6. Connect cables 2W6/2W15* and 2W20/2W26* to LNA connector J2.
7. Close pedestal riser housing access door (LPP) or install access cover plate (FSP).

- - - - -

* Redundant

8. Perform steps 1 through 15 of paragraph 6-6.16.3 to turn on antenna/pedestal.
9. The following Receiver Adaptation parameter is associated with the Low Noise Amplifier.

| Parameter | Path Loss | Description | Typical Value (dB) |
|---|---|---|---|
| R74 | PL_A2A4/2A8* | 2A4J1_2/2A8J1_2* | +27.4 |

This path loss is compensated for in the performance of On-Line Reflectivity Calibration. It may not be necessary to perform the path loss measurement upon module replacement. In order to determine whether this is necessary, perform the RDASOT Receiver Diagnostics Subtest 20. If it fails, perform the Low Noise Amplifier path loss measurement as per paragraph 6-6.31 and enter the new value in the Receiver Adaptation Data per paragraph 6-6.29. In addition, perform the IF Amplifier/Limiter Gain Adjustment per paragraph 6-6.24.1 to verify the receiver channel noise floor.

6-5.52.15 Main Bearing Oil Sensor UD2A1A3RT2 Replacement Procedure.

Two technicians are required for this procedure.

6-5.52.15.1 Equipment and Tools Required.

1. Pump, SE1-1, P/N 1P579, CAGE Code 25795 or equivalent
2. 18″ adjustable wrench or 1 5/8″ combination wrench
3. Grease, Moly Disulfide (MIL-G-21164)
4. Gloves, rubber (2 pair)
5. Protective clothing (2 sets)
6. MD-109 drain hose assembly, SE12 (SERD 28) P/N 3F6132, CAGE Code 97484 or equivalent
7. Empty 5 gallon containers (Qty 2 for FSP, 3 for LPP)
8. Oil, 10 gal (FSP), 15 gal (LPP) P/N SCH 75W, CAGE Code 12939
9. Cloth wipes, absorbent, lint free
10. O-ring, MS28778-8, CAGE Code 96906

6-5.52.15.2 Initial Conditions/Preliminary Setup.

**WARNING**

Failure to perform applicable shutdown steps in paragraph 6-6.15.3 could cause serious injury or death from antenna radiation or antenna movement.

1. Perform steps 1, 2, 3, 5, and 6 of paragraph 6-6.15.3 to shutdown and secure the antenna/pedestal.

**WARNING**

Failure to place the pedestal PWR ON/SAFE Safety Interlock Switch to the SAFE position could cause serious injury or death.

2. At the azimuth housing, ensure the PWR ON/SAFE Safety Interlock Switch is set to the SAFE position.

**WARNING**

Failure to move azimuth and elevation mechanisms from OPERATE to STOW could cause serious injury or death.

3. Ensure that the azimuth and elevation stow mechanisms are in the STOW position.

6-5.52.15.3 Replacement Procedure.

**NOTE**

You will be entering a confined space, non-permit required. This means the confined space does not contain any atmospheric hazards capable of causing death or serious physical harm.

1. Open the azimuth access door (LPP) or remove the access hatch cover (FSP), enter azimuth housing and locate the azimuth bearing oil reservoir drain plug. (See Figure 6-39, sheet 1 for LPP sites or sheet 2 for FSP sites).

**WARNING**

**HOT OIL**. Avoid contact with hot oil. Contact with hot oil can cause skin burns and other injuries relating to hot oil. Wear gloves and protective clothing when handling oil fittings and hose.

**NOTE**

Before draining the oil from the reservoir, have tools, containers, hoses, and the drain fitting ready to minimize any oil leakage.

2. Place the plain end of the MD-109 drain/fill hose into one of the empty five gallon containers.
3. Remove the azimuth bearing reservoir magnetic drain plug from the azimuth drive module drain/fill fitting.
4. Ensure the MD-109 hose assembly valve is closed. Insert the threaded end of the MD-109 oil drain/fill line into the azimuth drive module drain/fill fitting. (This will open the spring loaded valve and allow bi-directional oil flow.)
5. Open the hose assembly valve and drain the reservoir completely. After the reservoir has drained, close the hose assembly valve.
6. Locate the Main Bearing Oil Level Sensor. (See Figure 6-39, sheet 1 for LPP or sheet 2 for FSP sites).
7. Remove the oil sensor cable.
8. Using the 18″ adjustable wrench or 1 5/8″ combination wrench, remove the oil sensor.
9. Install a new O-ring on the replacement oil sensor.
10. Install the new oil sensor and tighten it to a snug fit using the appropriate wrench.
11. Reconnect the cable to the oil sensor.

**CAUTION**

Use 75W synthetic oil. Use SCH 75W Synthetic Gear Oil by American Lubricants, Buffalo, NY (CAGE Code 12939). However, for those sites where the operating temperature falls to -40 ° C for extended periods of time, use Tribolube L-3 Synthetic Gear Oil by Aerospace Lubricants, Inc., Columbus OH 43212

(CAGE Code 66164). **Using the wrong oil will seriously damage the gearbox**.

12. Connect the MD-109 oil drain/fill hose to the discharge side of the pump and the pump suction hose into the container of new oil. Open the hose assembly valve.

13. Locate the oil level column (oil sight glass at LPP sites) on the left side of the azimuth stow mechanism and fill Azimuth Bearing Oil Reservoir until oil level reaches the scribe mark on the column guage (mid-point on the LPP sight glass).

14. Stop pumping oil and close the hose assembly valve. Disconnect MD-109 fitting from the azimuth housing and clean, then replace the magnetic drain plug in the azimuth housing.

15. Perform steps 1 through 15 of paragraph 6-6.16.3 to restore system operation.

6-5.52.16 Azimuth Rotary Joint UD2A1A4 Replacement Procedure.

Two technicians are required for this procedure.

6-5.52.16.1 Equipment and Tools Required.

1. Attachment hardware
2. Chapman set, kit number 7341
3. Wrench, 3/8 Allen
4. Wrench, 5/16 Allen
5. Waveguide cover (Qty 2)
6. Waveguide pressure seals (Qty 2)
7. Drop light (Qty 1).

6-5.52.16.2 Initial Conditions/Preliminary Setup.

**WARNING**

Failure to perform applicable shutdown steps in paragraph 6-6.15.3 could cause serious injury or death from antenna radiation or antenna movement.

**NOTE**

Do not turn off Waveguide Pressurization Unit.

1. Perform steps 1, 2, 3, 5, and 6 of paragraph 6-6.15.3 to shut down antenna/pedestal.

**WARNING**

Failure to place the pedestal PWR ON/SAFE Safety Interlock Switch to the SAFE position could cause serious injury or death.

2. At the azimuth housing, ensure the PWR ON/SAFE Safety Interlock Switch is set to the SAFE position.

**WARNING**

Failure to move azimuth and elevation stow pins from OPERATE to STOW could cause serious injury or death.

3. Ensure that the azimuth and elevation stow pins are in STOW.

6-5.52.16.3 Replacement Procedure.

1. Remove service ladder by removing four quick disconnect pins.

**NOTE**

You will be entering a confined space, non-permit required. This means the confined space does not contain any atmospheric hazards capable of causing death or serious physical harm.

2. Open pedestal riser housing access door (LPP) or remove access cover plate (FSP) and install drop light.

**NOTE**

Cover each section of waveguide with waveguide covers as soon as flanges are exposed.

3. Perform paragraph 6-5.52.18.3 (steps 2 through 5) to remove Circulator UD2A1WG5.
4. Remove the two attaching sections of waveguide from the rotary joint by removing eight sets of hex socket screws and lock washers. Install waveguide covers onto all exposed waveguide flanges.
5. Remove U-shaped waveguide bracket attached to the top circular section of rotary joint by removing two hex-head screws.
6. Locate the eight hex-head mounting bolts for the rotary joint and remove all but two bolts that are 180 degrees apart. The second technician enters the compartment and provides rotary joint support. Remove the remaining two bolts freeing rotary joint from assembly.

**WARNING**

Ensure waveguide flanges are clean before mating. Do not use silicon to retain seals in slot.

7. To install replacement rotary joint, reverse steps 4 through 6 except remove old waveguide seals and install new seals before mating waveguide flanges.

8. Replace circulator per paragraph 6-5.52.18.3 , steps 6 and 7.

9. Remove drop light, close pedestal riser access door (LPP) or install access cover plate (FSP) and remount service ladder.

10. Place azimuth stow pin to the **OPERATE** position.

11. Manually rotate antenna clockwise and counterclockwise and check rotary joint for smooth mechanical operation.

12. Perform procedure detailed in paragraph 6-6.32.5 to measure path losses associated with the azimuth rotary joint.

6-5.52.17 Slip Ring UD2A1A2 Replacement Procedure.

Three technicians are required for this procedure.

6-5.52.17.1 Equipment and Tools Required.

1. Multimeter

2. Drop lights (Qty 2)

3. Chapman tool set, kit number 7341

4. Rosebud Allens - 3/16, 5/16, and two extensions with handle

5. Plug pliers used to remove connectors

6. Three waveguide air seals

7. S-band waveguide covers (Qty 6)

8. Socket set which includes wrench, 5/16 and 9/16 sockets

9. 3/8-inch hex drive set with 24 inches of extension

10. General cleaning material

11. Screwdriver set, Phillips-tip.

6-5.52.17.2 Initial Conditions/Preliminary Setup.

1. Place replacement slip ring assembly on the work bench.

2. Conduct continuity and resistance check through slip ring assembly using a multimeter. Refer to NWS EHB 6-513* Figure 2-15 sheets 1 through 3/NWS EHB

6-514*, Figure FO2-1, sheets 1 through 3 for pinout of slip ring connectors. If internal wiring errors are found, return unit and obtain a replacement slip ring assembly.

**WARNING**

Failure to perform applicable shutdown steps in paragraph 6-6.15.3 could cause serious injury or death from antenna radiation or antenna movement.

**NOTE**

Do not turn off Waveguide Pressurization Unit.

3. Perform steps 1 through 6 of paragraph 6-6.15.3 to shut down antenna/pedestal.

**WARNING**

Failure to place the pedestal PWR ON/SAFE Safety Interlock Switch to the SAFE position could cause serious injury or death.

4. At the azimuth housing, ensure the PWR ON/SAFE Safety Interlock Switch is set to the SAFE position.

**WARNING**

Failure to move azimuth and elevation stow pins from OPERATE to STOW could cause serious injury or death.

5. Ensure that the azimuth and elevation stow pins are in STOW position.

6-5.52.17.3 Replacement Procedure.

**NOTE**

You will be entering a confined space, non-permit required. This means the confined space does not contain any atmospheric hazards capable of causing death or serious physical harm.

1. Open azimuth housing access door (LPP) or remove access cover plate (FSP) to gain access to slip ring assembly.
2. Disconnect six connectors and two ground leads at the slip ring assembly.
3. Remove azimuth rotary joint by performing steps 1 through 6 of azimuth rotary joint remove/replace procedure, paragraph 6-5.52.16.3 . Please note that the two short pieces of waveguide are removed along with the rotary joint.

**NOTE**

Three technicians are required for the next step, two technicians inside the lower pedestal housing and one outside the pedestal housing.

- - - - -

* Site dependent

4. Remove circular plate between lower- and mid-level compartments.

**NOTE**

Steps 5 through 8 primarily apply to Full Scale Production (FSP) pedestals. Sites with Limited Phase Production (LPP) pedestals, refer to steps 9 through 12 for special removal procedures.

5. Remove the rotary joint mounting bracket by removing six hex socket head screws. Use hex drive kit with 24-inch extension. Remove unit from housing and place onto radome deck.

6. One technician enters azimuth housing. Using hex tools from kit, remove six hex socket head bolts from slip ring assembly.

7. Inside lower pedestal compartment, remove vertical rotary joint guide.

**NOTE**

Care must be taken not to strike waveguide installed through the center of the rotary joint when removing slip ring assembly.

8. Remove the two remaining hex socket head bolts, holding the slip ring assembly. Two technicians are required to lower the slip ring assembly and place it on the radome deck.

**NOTE**

Steps 9 through 12 are for LPP pedestals only. It might be helpful to use NWS EHB 6-501, IPB, Figure 4 for following procedures.

9. The waveguide running through the center of the slip ring assembly must be disconnected at both the top and bottom, and then pulled up into the elevation assembly housing so that it clears the slip ring assembly. Perform the following steps:

   a. In the elevation housing, remove the waveguide screws securing the horizontal section of waveguide to the waveguide joint that exits the elevation housing. Refer to NWS EHB 6-501, Figure 4, Sheet 2, far right picture, waveguide joint at top or Sheet 1, item number 3 and 19/32.

   b. In the azimuth housing, remove the waveguide screws from the waveguide rotary joint below the slip ring assembly. Refer to NWS EHB 6-501, Figure 4, Sheet 2, item number 38.

   c. In the elevation housing, pull the loosened, vertical section of waveguide up into the elevation housing enough to clear the slip ring assembly.

10. In the pedestal riser housing, perform the following steps to lower the waveguide assembly attached to the plate and bracket mounting hardware enough to allow the slip ring assembly to be removed:

a. Remove the waveguide joint screws securing the waveguide to the RF Circulator. This step must be done prior to loosening the plate assembly bolts. This will enable the complete assembly of waveguides attached to the mounting plate to be lowered along with the plate. Refer to NWS EHB 6-501, Figure 4, Sheet 3, left side View C (for LPP pedestal), item number 50.

b. At the top of the riser housing, loosen the seven (7) 5/16″ hex-head bolts 1/2″ to 3/4″ to allow the plate and bracket to be lowered enough to allow the slip ring assembly above to be removed. Use of a 3/8″ drive, Allen/hex-head socket with 24″ to 30″ of drive extensions is required. To gain better access to the bolts, remove the support brace between the RF Circulator and the plate and bracket assembly (optional).

11. In the azimuth housing, loosen the bolts holding the center tube to the inside, top of the azimuth assembly to allow free play to remove the slip assembly.

12. Remove the slip assembly.

13. Reverse removal procedures to install new slip ring assembly.

14. Place the azimuth and elevation stow pins in the OPERATE position.

15. After mechanical installation has been completed, manually rotate antenna by hand through 360 degrees and check for slip ring binding.

16. Remove all tools and material from radome. One technician should be inside the radome and be prepared for electrical operations.

17. Restore RDA by conducting steps in paragraph 6-6.16.3 , except leave the pedestal PWR ON/SAFE Safety Interlock Switch in the SAFE position.

18. Terminate application on the controlling channel by entering **TERP<Tab>*password*<Return>**. **Simultaneously** press the **<Shift>** and **<Port>** keys to shift to the System Console screen.

19. After software is down, enter **RDASOT<Return>** at the RDA System Console.

20. If using Redundant system, and Mode Selection menu appears, enter **1<Return>** to select FULL mode, then proceed to step 21.

21. Technician inside radome should exit and the pedestal Safety Interlock Switch should be placed in the PWR ON position.

22. Enter the following set of commands at the RDA System Console:

    Enter **4<Return>** to select Manual Control and Display Menu.
    Enter **1<Return>** to select Control Pedestal.
    Enter **3<Return>** to select Pedestal Manual Control.
    Enter **1<Return>** to Command Azimuth Position.
    Enter **15<Return>** for 15 degree position command.

23. Repeat the commands listed in step 22, except increase position command by 15 degrees until 360 degrees of azimuth movement has been completed.

24. At the RDA System Console, command the pedestal to park by entering the following:

    **Ø<Return>** to Terminate Manual Control.
    **2<Return>** to Park Pedestal.

25. Return to the Manual Control and Display Menu by entering **Ø<Return>**, select DAU Bite Display by entering **3<Return>**. This screen has 10 pages of status; page through these screens and check pedestal associated status for normal operation.

26. At the RDA System Console, enter **Ø<Return>** until RDASOT is terminated.

27. At the RDA System Console, enter **RDAUP<Return>**. Press the **<Shift>** and **<Port>** keys **simultaneously**. After applications software has been reloaded, place system into local radiate and observe normal antenna power and pedestal displays.

28. At the Applications Terminal command line, enter **ENRC<Return>** to allow remote control operation.

6-5.52.18 Circulator UD2A1WG05 Replacement Procedure.

Two technicians are required for this procedure.

6-5.52.18.1 Equipment and Tools Required.

1. Wrench set, combination
2. Wrench set, hex key
3. Pliers, 6-inch channel lock
4. Screwdriver set, Phillips-tip.

6-5.52.18.2 Initial Conditions/Preliminary Setup.

**WARNING**

Failure to perform applicable shutdown steps in paragraph 6-6.15.3 could cause serious injury or death from antenna radiation or antenna movement.

1. Perform paragraph 6-6.15.3 to shut down antenna/pedestal.

**WARNING**

Failure to place the pedestal PWR ON/SAFE Safety Interlock Switch to the SAFE position could cause serious injury or death.

2. At the azimuth housing, ensure the PWR ON/SAFE Safety Interlock Switch is set to the SAFE position.

6-5.52.18.3 Replacement Procedure.

**NOTE**

You will be entering a confined space, non-permit required. This means the confined space does not contain any atmospheric hazards capable of causing death or serious physical harm.

1. Open pedestal riser housing access door (LPP) or remove access cover plate (FSP).

**NOTE**

For equipment location, see Figure 6-42, sheet 1 (LPP), sheet 2 (FSP), or sheet 3 (Redundant) depending on site configuration.

2. Remove bolts which connect Circulator/Tower Waveguide (UD2A1WG4) to Circulator at Port 1.
3. Remove bolts which connect Circulator/RCVR Protector Waveguide (UD2A1WG3) to Circulator at Port 3.
4. Remove bolts which connect Circulator/Rotary Joint Waveguide to Circulator at Port 2.

**CAUTION**

For the following steps, one technician must support the total weight of the circulator to ensure the circulator and all neighboring waveguides are not damaged by stress or hanging weight.

5. One technician must remove bolts from left and right support brackets that are supporting the weight of the circulator while another technician holds the circulator supporting its weight. Remove circulator through riser access door.
6. Place all waveguide gaskets from the damaged Circulator on the replacement Circulator, or use new gaskets if the gaskets are damaged.

**NOTE**

Ensure that waveguide flange and gasket are seated properly when performing the next step.

7. One technician positions the replacement circulator, holding its total weight at all times, while the other technician loosely attaches all waveguide flange bolts and support bracket bolts. Then after all bolts have been loosely attached, tighten all waveguide flange bolts first then tighten all support bracket bolts.
8. Perform step 10 of paragraph 6-6.16.3 to energize Waveguide Pressurization Unit.
9. In the pedestal riser, locate Receiver Protector UD2A3. Loosen the bolts on J1, the waveguide input to the Receiver Protector. This is done to allow some air to leak

out at this end of the waveguide run, yet allow the Waveguide Pressurization Unit to build pressure on the waveguide run.

10. After 1 hour of purging the system, tighten the bolts on J1 of the Receiver Protector.
11. Perform applicable steps of paragraph 6-6.16.3 to restore system operation.
12. Close the pedestal riser housing access door or install access cover plate.
13. The following Transmitter Adaptation parameter is associated with Circulator UD2A1WG05:

| Parameter | Path Loss | Description | Typical Value (dB) |
|---|---|---|---|
| TR34 | Circulator | Port 2 to Port 3 | -0.2 |

6-5.52.19 Passive Diode Limiter 2A3A1/2A7A1 Replacement Procedure.

One technician is required to execute this procedure.

6-5.52.19.1 Equipment and Tools Required.

1. RF Signal Generator Gigatronics Model 600/01-8 Option 8 or equivalent
2. Power Meter HP436A
3. Power Sensor HP8481A
4. Adapter, N-type, female-to-female
5. Screwdriver set, Phillips-tip.

6-5.52.19.2 Initial Conditions/Preliminary Setup.

1. Before proceeding to the radome to replace the Passive Diode Limiter, check the path loss of the replacement unit as follows:
   a. Turn on the RF signal generator, set it to the site frequency and the CW mode by setting the modulation switches OFF. Allow the generator to stabilize.
   b. Set the Output Amplitude dial to -10.0 dBm.
   c. Connect the power sensor to the power meter. Turn on the power meter and calibrate the combination per paragraph 6-6.22 .
   d. Connect the power sensor to the output connector of the signal generator. Record the power output as below:

      $P_{in}$ = _____ dBm

   e. Disconnect the power sensor and connect the input of the replacement Passive Diode Limiter to the signal generator output. Connect the power sensor to the

output of the Passive Diode Limiter through the N-type female-to-female adapter.

f. Measure the power output of the Passive Diode Limiter as below:

$P_{out}$ = _____ dBm

g. Calculate the path loss of the Passive Diode Limiter as follows:

PL Passive Limiter = $P_{out}$ - $P_{in}$

= _____ - _____

= _____ dB

If the path loss is between Ø and -1 dB, proceed to the next step. If the path loss is more than -1 dB (e.g., -1.3 dB), the replacement Passive Diode Limiter is defective.

2. Perform steps 1, 2, 3, and 5 of paragraph 6-6.15.3 to shut down antenna/pedestal.

**WARNING**

Failure to place the pedestal PWR ON/SAFE Safety Interlock Switch to the SAFE position could cause serious injury or death.

3. At the azimuth housing, ensure the PWR ON/SAFE Safety Interlock Switch is set to the SAFE position.

6-5.52.19.3 Replacement Procedure.

**NOTE**

You will be entering a confined space, non-permit required. This means the confined space does not contain any atmospheric hazards capable of causing death or serious physical harm.

1. Open pedestal riser housing access door (LPP) or remove access cover plate (FSP).

**NOTE**

For equipment location, see Figure 6-42, sheet 1 (LPP), sheet 2 (FSP), or sheet 3 (Redundant) depending on site configuration.

2. Disconnect cable 2W900/2W901* from Passive Diode Limiter UD2A3A1/2A7A1*.

3. Disconnect the other end of Passive Diode Limiter from the N-type connector on the Receiver Protector UD2A3/2A7*. The Passive Diode Limiter looks very much like an N-type cartridge attenuator.

4. Connect the replacement Passive Diode Limiter to the N-type connector on the Receiver Protector.

- - - - -

* Redundant

5. Connect cable 2W900/2W901* to the output of the Passive Diode Limiter.
6. It is not necessary to calibrate R73 if the replacement Passive Diode Limiter path loss is between Ø and -1 dB as measured in paragraph 6-5.52.19.2 , step 1.g.
7. Close the pedestal riser housing access door or install access cover plate.
8. Perform applicable steps of paragraph 6-6.16.3 to restore system operation.

6-5.52.20 Bandpass Filter 2A1A3FL1 and 2A1A3FL2 Replacement Procedure.

Two technicians are required for this procedure.

6-5.52.20.1 Equipment and Tools Required.

1. Screwdriver set, common
2. Socket set
3. Adjustable wrench.

6-5.52.20.2 Initial Conditions/Preliminary Setup.

**WARNING**

Failure to perform applicable shutdown steps in paragraph 6-6.15.3 could cause serious injury or death from antenna radiation or antenna movement.

**NOTE**

Do not turn off Waveguide Pressurization Unit.

1. Perform steps 1, 2, 3, and 5 of paragraph 6-6.15.3 to shut down antenna/pedestal.

**WARNING**

Failure to place the pedestal PWR ON/SAFE Safety Interlock Switch to the SAFE position could cause serious injury or death.

2. At the azimuth housing, ensure the PWR ON/SAFE Safety Interlock Switch is set to the SAFE position.

6-5.52.20.3 Replacement Procedure.

**NOTE**

You will be entering a confined space, non-permit required. This means the confined space does not contain any atmospheric hazards capable of causing death or serious physical harm.

1. Open pedestal riser housing access door (LPP) or remove access cover plate (FSP).

**NOTE**

For equipment location, see Figure 6-42, sheet 1 (LPP), sheet 2 (FSP), or sheet 3 (Redundant) depending on site configuration.

2. Disconnect cable 2W900/2W901* from Passive Diode Limiter at Receiver Protector J2.
3. Disconnect other end of cable 2W900/2W901* from Bandpass Filter 2A1A3FL1 In or 2A1A3FL2* In.

**NOTE**

2A1A3FL1 and 2A1A3FL2 will hereinafter be referred to as Bandpass Filter.

4. Remove the LNA from the mounting bracket using the proper screwdriver.
5. Remove Bandpass Filter from mounting bracket by removing five hex-head bolts.
6. Remove and retain coupler CP1 at output connector of Bandpass Filter for reuse.
7. Attach coupler CP1 to output connector of replacement Bandpass Filter.
8. Attach replacement Bandpass Filter to the mounting bracket with the five hex-head bolts removed in step 5.
9. Attach the LNA to the mounting bracket using the proper screwdriver, and connect to the Bandpass Filter. Don't fully tighten the four screws until the LNA is connected to the Bandpass Filter.

**NOTE**

The path loss measurement for R247 may be performed prior to reconnecting cable 2W900/2W901*. Refer to step 14.

10. Connect cable 2W900/2W901* to the Passive Diode Limiter at Receiver Protector J2.
11. Connect the other end of cable 2W900/2W901* to the input connector of the Bandpass Filter.
12. Close pedestal riser housing access door or install access cover plate.
13. Perform applicable steps of paragraph 6-6.16.3 to turn on antenna/pedestal.
14. The following Receiver Adaptation is associated with the Bandpass Filter.

| Parameter | Path Loss | Description | Typical Value (dB) |
|---|---|---|---|
| R247 | PL_2A1A3FL1 IN_OUT | Path loss from 2W900/1 P2 to 2A1A3FL1/2 Out. | -0 .50 |

- - - - -

* Redundant

**NOTE**

R247 and R248 have been created and added to Receiver Adaptation data for the path loss of the EMI Bandpass Filter and cable, respectively, but currently most sites have a value of Ø (zero) assigned to each as the path loss is included in the R73 value. However, the R247 path loss measured after replacement of the Bandpass Filter UD2A1A3FL1/2 should be entered into Adaptation Data. If the R247 value is as a non-zero value and entered into Adaptation Data, then a new value for R73 **must** be calculated as $R73_{New} = R73_{Old} - R247$.

Parameter R247 is the path loss from 2W900/1* P2 to 2A1A3FL1/2* OUT. The path loss must be measured per paragraph 6-6.31 and update R247 per paragraph 6-6.29 .

6-5.52.21 Coax Cable 2W900 and 2W901 Replacement Procedure.

Two technicians are required for this procedure.

6-5.52.21.1 Equipment and Tools Required.

Adjustable wrench.

6-5.52.21.2 Initial Conditions/Preliminary Setup.

**WARNING**

Failure to perform applicable shutdown steps in paragraph 6-6.15.3 could cause serious injury or death from antenna radiation or antenna movement.

1. Perform steps 1, 2, 3, and 5 of paragraph 6-6.15.3 to shut down antenna/pedestal.

**WARNING**

Failure to place the pedestal PWR ON/SAFE Safety Interlock Switch to the SAFE position could cause serious injury or death.

2. At the azimuth housing, ensure the PWR ON/SAFE Safety Interlock Switch is set to the SAFE position.

6-5.52.21.3 Replacement Procedure.

**NOTE**

You will be entering a confined space, non-permit required. This means the confined space does not contain any atmospheric hazards capable of causing death or serious physical harm.

- - - - -

* Redundant

1. Open pedestal riser housing access door (LPP) or remove access cover plate (FSP).

**NOTE**

For equipment location, see Figure 6-42, sheet 1 (LPP), sheet 2 (FSP), or sheet 3 (Redundant) depending on site configuration.

2. Disconnect cable 2W900/2W901* from Passive Diode Limiter at Receiver Protector J2.
3. Disconnect other end of cable 2W900/2W901* from Bandpass Filter 2A1A3FL1 In or 2A1A3FL2 In.

**NOTE**

The path loss measurement for R248 may be performed prior to reconnecting cable 2W900/2W901*. Refer to step 8.

4. Connect cable 2W900/2W901* to the Passive Diode limiter at Receiver Protector J2.
5. Connect other end of cable 2W900/2W901* to the input connector of the Bandpass Filter.
6. Close pedestal riser housing access door or install access cover plate.
7. Perform applicable steps of paragraph 6-6.16.3 to turn on antenna/pedestal.
8. The following Receiver Adaptation is associated with the Coax Cable 2W900/2W901*.

| Parameter | Path Loss | Description | Typical Value (dB) |
|---|---|---|---|
| R248 | PL_2W900/ 2W901* | Path loss of cable from 2W900P1 to 2W900P2. | -0 .20 |

**NOTE**

R247 and R248 have been created and added to Receiver Adaptation data for the path loss of the EMI Bandpass Filter and cable, respectively, but currently most sites have a value of Ø (zero) assigned to each as the path loss is included in the R73 value. However, the R248 path loss measured after the replacement of the Coax Cable 2W900/1 should be entered into Adaptation Data. If the R248 value is as a non-zero value and entered into Adaptation Data, then a new value for R73 **must** be calculated as $R73_{New} = R73_{Old} - R248$.

Parameter R248 is the path loss from 2W900/1* P1 to 2W900/1*P2. The path loss must be measured per paragraph 6-6.31 and update R248 per paragraph 6-6.29 .

- - - - -

* Redundant

6-5.52.22 Antenna Power Monitor UD2A5 and UD2A9 Replacement Procedure

Two technicians are required for this procedure.

6-5.52.22.1 Equipment and Tools Required.

1. Pliers
2. Ladder, 20-foot extension
3. Harness, safety

6-5.52.22.2 Initial Conditions/Preliminary Setup.

**WARNING**

Failure to perform applicable shutdown steps in paragraph 6-6.15.3 could cause serious injury or death from antenna radiation or antenna movement.

1. Perform steps 1, 2, 3, 5, and 6 of paragraph 6-6.15.3 to shut down antenna/pedestal.

**WARNING**

Failure to place the pedestal PWR ON/SAFE Safety Interlock Switch to the SAFE position could cause serious injury or death.

2. At the azimuth housing, ensure the PWR ON/SAFE Safety Interlock Switch is set to the SAFE position.

**WARNING**

Failure to move azimuth and elevation stow pins from OPERATE to STOW could cause serious injury or death.

3. Ensure that the azimuth and elevation stow pins are in STOW.

6-5.52.22.3 Replacement Procedure.

1. At **FSP sites**, place the ladder on the ladder hook on the side of the pedestal near the power monitor(s). At **LPP sites**, place the ladder on the upper ladder hook above the elevation assembly access door.

**WARNING**

The technician who climbs the ladder is responsible for putting on the safety harness and hooking it to a safe position.

2. Don safety harness prior to ascending ladder.

3. Ensure that the technician wearing the safety harness is secured to pedestal prior to starting removal procedure.
4. Remove cable 2W21 or 2W27 from J1 of the defective power monitor.
5. Unscrew the type-N connector on the other end of the power monitor and remove defective power monitor.
6. Install new power monitor onto type-N connector and tighten.
7. Install cable 2W21 or 2W27 connector onto J1 of power monitor and secure connection.
8. Unhook safety harness from pedestal securing point and descend ladder.
9. Remove ladder from elevation housing and place on floor of pedestal.
10. Perform applicable steps of paragraph 6-6.16.3 , steps 1 through 15 to turn on antenna/pedestal.
11. Ensure the PWR ON/SAFE Safety Interlock Switch on the azimuth housing is set to PWR ON before descending from the radome.
12. Perform paragraph 6-6.27 , RDA Power Monitor Bias Adjustment and paragraph 6-6.28.1.3 , Power Monitor Consistency Check, to align and initialize the new antenna power monitor.
13. Return system to normal operation.

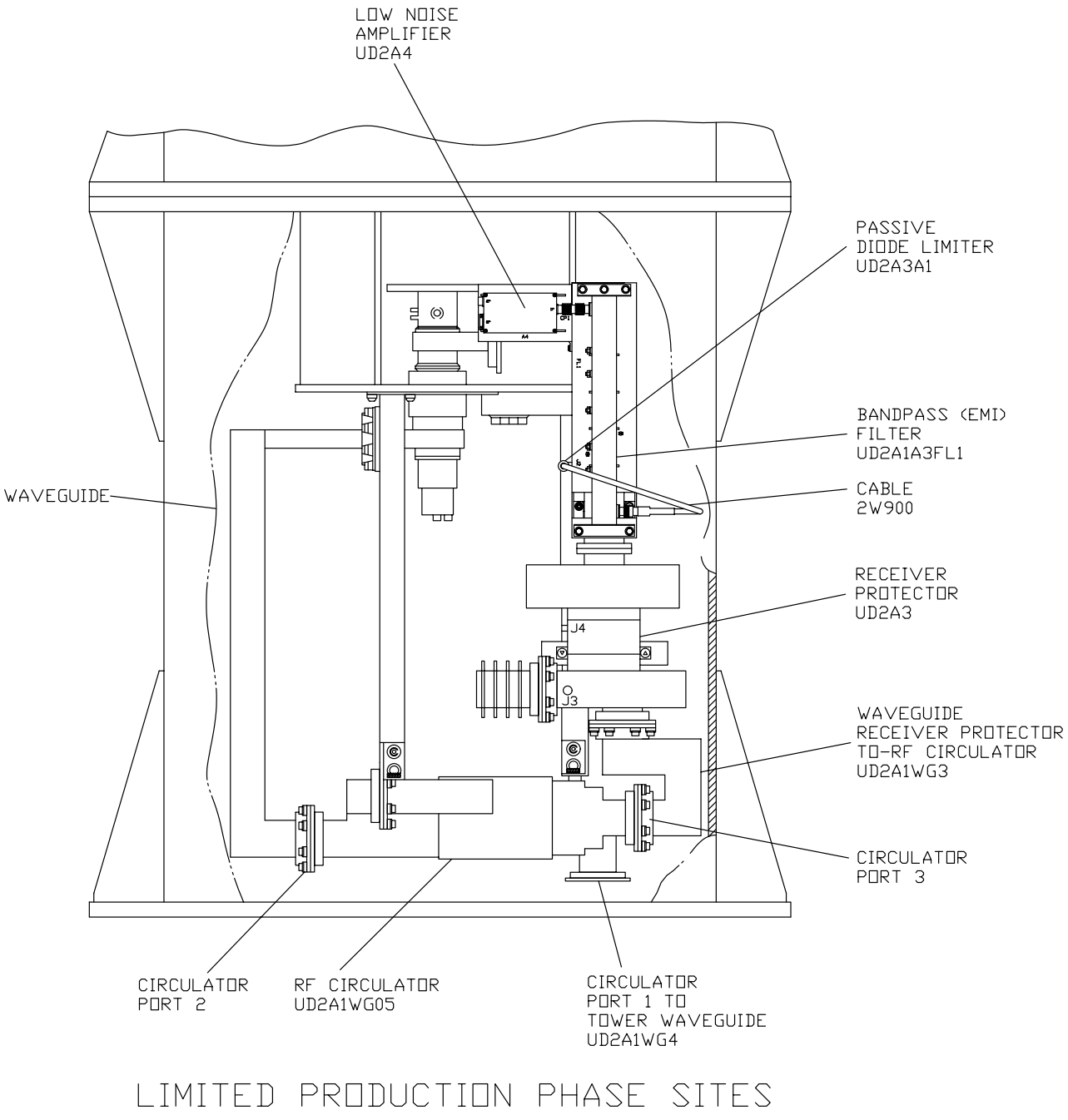


Figure 6-42. Receiver Front End/Linear Polarization Equipment (Sheet 1 of 3)

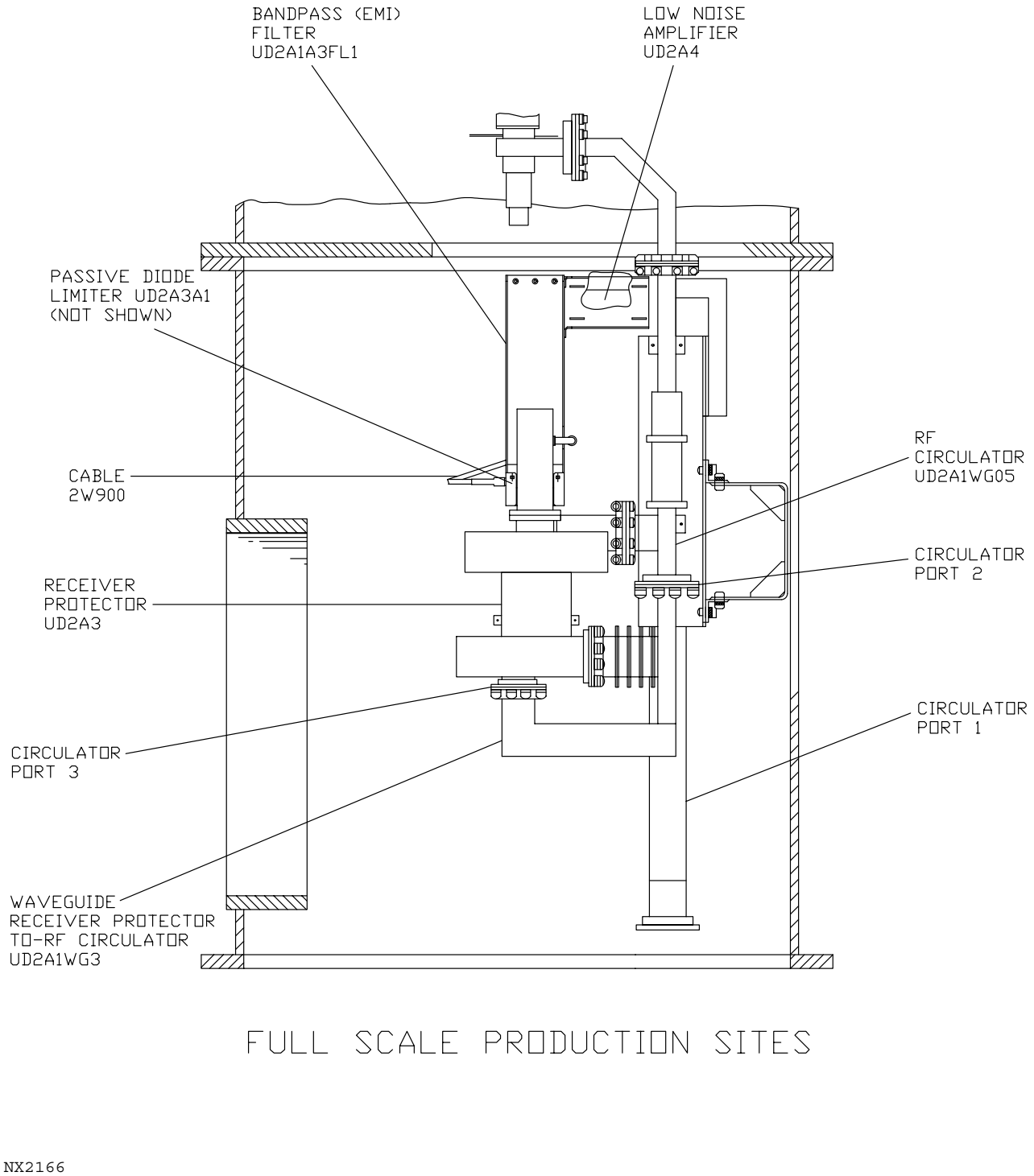


Figure 6-42. Receiver Front End/Linear Polarization Equipment (Sheet 2 of 3)

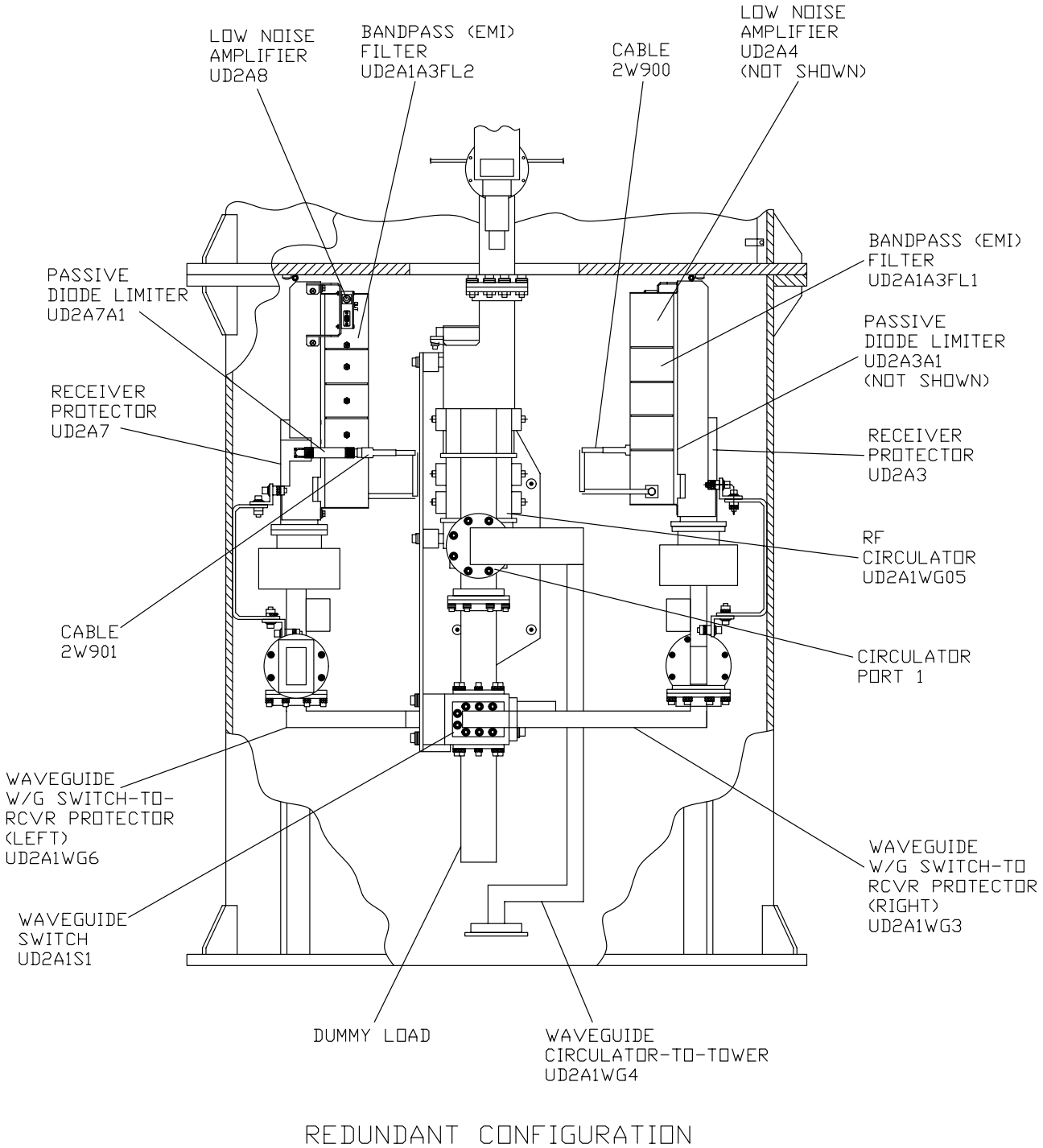


Figure 6-42. Receiver Front End/Linear Polarization Equipment (Sheet 3 of 3)

6-5.53 WAVEGUIDE COMPONENTS.

When required to replace any waveguide component, the technician must exercise extreme caution while visually checking for surface damage, cleanliness, corrosion, and presence of obstructions. Gaskets are also to be checked for damage, corrosion, excessive wear and tear, and proper fitness. When removing waveguide sections that have air pressurization connections, always use two wrenches when connecting or disconnecting fittings.

6-5.53.1 Equipment Shelter UD1 Waveguide Assembly LRUs (1WG1 through 1WG19, 1WG101 through 1WG107, and 1S1, 1S2, 1S101, 1DC1, and 1DC101). Perform the procedure in paragraph 6-5.53.4 to replace waveguide components. Perform the procedure in paragraph 6-5.53.5 to replace Waveguide Switches UD1S1, UD1S2, and UD1S101. See Table 6-20 for associated adaptation parameters and path loss measurement cross references. Finally, upon completion of any waveguide component within the RDA shelter, refer to paragraph 6-5.53.6 and perform a radiation leakage check.

In a few cases, the adjacent waveguide must first be removed in order to remove the defective waveguide piece. For example, it may be necessary to remove the spectrum filter (1WG6) to replace the shelter circulator (1WG4) if the spectrum filter support bracket is not installed.

6-5.53.2 Steel Tower UD11 Waveguide LRUs (WG1 through WG18). Perform the procedure in paragraph 6-5.53.4 to replace steel tower waveguide LRUs except for WG17. Due to the tight location of WG17 at the base of the tower, a crane or special platform may be necessary for safety reasons because the distance from the stairs to the center of the waveguide holding mast could be too great for the technician to safely remove the securing screws of WG17. See Table 6-20 for associated adaptation parameters and path loss measurement cross references.

6-5.53.3 Pedestal Waveguide LRUs (UD2xxxxxxx components). Perform the procedure in paragraph 6-5.53 to replace pedestal waveguide LRUs. See Table 6-20 for associated adaptation parameters and path loss measurement cross references.

**WARNING**

Technicians replacing any above-ground waveguides must use a safety harness prior to starting replacement procedure.

6-5.53.4 Waveguide Component (1WG1 through 1WG19 and 1WG101 through 1WG107 Replacement.

One technician is required for this procedure.

6-5.53.4.1 Equipment and Tools Required.

1. Wrench set, hex key
2. Nut driver set
3. Wrench set, combination
4. Safety harness

5. Waveguide gaskets
6. Wrench, torque, 30-200 in-lb, 3/8-inch drive
7. Drive extension bar, 6-in × 3/8-inch drive
8. Drive adapter, 3/8-inch drive to 1/4-inch drive
9. Hex head driver, 3/16-inch, 1/4-inch drive
10. Ladder, 6 foot.

6-5.53.4.2 Initial Conditions/Preliminary Setup.

**WARNING**

Failure to perform applicable shutdown steps in Table 6-13 could cause serious injury or death.

1. Performs steps 1 through 5, 7, 8, and 9 of Table 6-13 to shut down the transmitter equipment.

**NOTE**

Step 2 is performed to ensure W/G Switch remains in the Load position. Air will escape when waveguide is opened. This is a normal indication if waveguide is properly pressurized.

2. At the W/G Switch located above the transmitter, disconnect J1 from P1. Put a safety tag on the control panel of the transmitter.
3. Perform steps 11 and 12 of Table 6-13 to shutdown Waveguide Pressurization Unit.

6-5.53.4.3 Replacement Procedure.

1. Locate waveguide section LRU to be removed.
2. Disconnect any air pressurization fitting using proper wrenches, if necessary.
3. Disconnect RF cables if necessary.
4. Remove waveguide or connector screws using proper wrenches and nut driver.
5. Remove waveguide section LRU, taking care not to damage inner surface or gasket.
6. Install new waveguide section LRU, taking care not to damage inner surface. Replace gasket if necessary.
7. Re-secure waveguide section LRU using the proper combination of torque wrench, extension bar, adapters, and hex keys. Using Figure 6-42A as a sequence guide, torque each waveguide bolt to 50 inch-pounds.

8. Reconnect RF cables if necessary.
9. Reconnect any air pressurization fitting using proper wrenches, if necessary
10. Perform step 10 of paragraph 6-6.16.3 to energize Waveguide Pressurization Unit.
11. Perform steps 5 through 6.c of paragraph 6-6.15.3 to secure pedestal power.

**NOTE**

You will be entering a confined space, non-permit required. This means the confined space does not contain any atmospheric hazards capable of causing death or serious physical harm.

12. In the pedestal riser, locate Receiver Protector UD2A3. Loosen the bolts on J1, the waveguide input to the Receiver Protector. This is done to allow some air to leak out at this end of the waveguide run, yet allow the Waveguide Pressurization Unit to build pressure on the waveguide run.
13. After 1 hour of purging the system, tighten the bolts on J1 of the Receiver Protector.
14. Perform steps 5.d through 14 of the paragraph 6-6.16.3 to restore system operation.
15. Perform radiation leakage check per paragraph 6-5.53.6 on any waveguide component loosened or replaced.

6-5.53.5 Waveguide Switch (UD1S1, UD1S101, and UD1S2) Replacement.

Two technicians are required for this procedure.

6-5.53.5.1 Equipment and Tools Required.

1. Wrench set, hex key
2. Nut driver set
3. Wrench set, combination
4. Wrench, torque, 30 to 200 in-lb
5. Waveguide gaskets
6. Ladder, 6 foot.

6-5.53.5.2 Initial Conditions/Preliminary Setup.

**WARNING**

Failure to perform applicable shutdown steps in Table 6-13 could cause serious injury or death.

1. Perform steps 1 through 5, 7, 8, and 9 of Table 6-13 to shut down transmitter equipment. Redundant sites, shut down both transmitters.
2. Perform steps 11 and 12 of Table 6-13 to shut down Waveguide Pressurization Unit.

6-5.53.5.3 Replacement Procedure.

1. Disconnect cable W19/W119 or W62 from bottom of W/G switch.

**NOTE**

To minimize stress on unsupported waveguide plumbing while W/G switch is removed, the low power dummy load should be removed from defective W/G switch and installed on new W/G switch before defective W/G switch is completely removed.

2. For Channel W/G Switches UD1S1/1S101 only, remove the low power dummy load from the defective W/G switch. Note which port it is attached to.
   a. Install low power dummy load onto new W/G switch and set aside.
3. Remove the hex-head screws securing the waveguide sections and gaskets to the W/G switch. Note the orientation of the W/G switch respective to the waveguide sections.
4. Remove the two hex-head screws securing W/G switch to ceiling bracket.
5. Carefully remove defective W/G switch taking care not to damage inner surface of waveguide sections or gaskets.
6. Carefully install new W/G switch, and gaskets if necessary, in same orientation as when removed. Have other technician support W/G switch.
7. Install the two hex-head screws in bracket and secure W/G switch to bracket.
8. While aligning waveguide sections to W/G switch, install hex-head screws and loosely tighten until all waveguide sections have been attached.
9. Tighten all hex-head screws to 50 in-lbs. Refer to Figure 6-42A for standard tightening sequence.
10. Reconnect cable to bottom of W/G switch.
11. Perform steps 3 and 4 of Table 6-15 to turn on Waveguide Pressurization Unit.
12. Perform steps 10, 11, and 22 of Table 6-15, to power-up transmitter(s).
13. Check the pressure gauge on the Bi-directional Coupler UD1DC1/1DC101 after 30 minutes. The pressure gauge should read approximately 3 PSI.
14. At the Applications Terminal command line, enter **OPER<Return>**.
15. Perform radiation leakage check per paragraph 6-5.53.6 on any waveguide component loosened or replaced.

6-5.53.6 Radiation Leakage Check.

**NOTE**

DoD and FAA sites, perform radiation leakage measurements IAW local procedures (i.e., DoD sites normally have the base Bioenvironmental Health personnel perform this measurement).

6-5.53.6.1 Equipment and Tools Required.

1. Model EMR-20 Radiation Meter (SERD 99), or equivalent
2. Model WG Type 8 E-Field 100 kHz - 3 GHz Probe (part of SERD 99 Kit)
3. Ladder, 6 foot

6-5.53.6.2 Preliminary Operations/Safety Precautions.

1. Consult Operations Manual provided with Radiation Hazard Meter.

6-5.53.6.3 Procedure.

**NOTE**

The following procedures are written for the EMR-20 Radiation Meter. If using another type of meter, refer to its owner's operating manual to calibrate and use the meter.

1. Perform the following steps to initialize the Model EMR-20 Radiation Meter:
   a. Attach the WG Type 8 E-Field 100 kHz - 3 GHz probe to the top of the meter. This is done by aligning the red line on the probe to the red line on the meter.
   b. Press the EMR-20 Radiation Meter ON/OFF button to turn on the meter. The meter will go through a self-test and calibration. A beep will sound indicating this operation is complete.
   c. Press the **MAX/AVRG** button until `MAX` is visible in the display window.
   d. Ensure `AVRG` is not visible in the display window. If `AVRG` is displayed, press the **MAX/AVRG** button until `AVRG` disappears from the display window.
   e. Press the **mW/cm$^2$** button until `mW/cm`$^2$ is visible in the right side of the display window.
2. Set the meter calibration by performing the following steps:
   a. Using the Meter Calibration Data card provided with the EMR-20 Radiation Meter, determine the calibration factor for your site frequency.

**NOTE**

While setting the new calibration factor, if no action is taken within 10 seconds, the meter display will return to the main screen. Press the **LIMIT/CAL** button twice to return to the CAL screen.

   b. Press the **LIMIT/CAL** button twice. `CAL` should be visible in the display window.
   c. Set the calibration factor determined in step 2.a by holding the **<Shift>** button, then pressing the ↑ or ↓ keys to increase or decrease the numerical value for

each decimal point. Press the → or ← keys to move from one decimal point to another. After setting the new calibration factor, wait 10 seconds and the meter will return to the main screen.

3. Press the **<Shift>** and the **ON/OFF** buttons simultaneously to reset the meter. `CLr` will be displayed in the window for approximately 2 seconds. Be sure to reset the meter before taking any measurements. The meter will store the last highest reading until the meter is physically reset.

**CAUTION**

Keep the probe away (greater than 8 inches) from HV or other cables. RF "riding" on the cables may be "capacitevely coupled" to the meter and produce a false high reading. This phenomena becomes a greater issue when measuring around the Arc Detector in the Transmitter Cabinet when it may be impossible to keep the probe greater than 8 inches from the cables that lie beneath the Arc Detector. In this instance, keep the probe sensor head touching the Arc Detector and do not allow the probe to touch the cables. It has been observed with the meter in the MAX mode and the probe touches the cables below the Arc Detector, that a double-digit, false reading does appear to occur.

**NOTES**

With the meter in MAX mode, the recorded number in the display window will not change, unless a higher value is measured.

The meter performs a self calibration test every six minutes. The test is performed when `null` is displayed for approximately 10 seconds. When the calibration is complete, the word `null` will disappear and the meter will be ready for use again.

4. With the transmitter operating normally (narrow pulse and RF sent to antenna), move the meter probe (yellow sensor head for Model EMR-20) completely around the waveguide component replaced and any waveguide component loosened to facilitate removal. The probe should be as close as possible to the waveguide components being checked. Pay particular attention to waveguide joint flanges. Any measurement above **0.5 mW/cm$^2$** indicates a loose joint or a defective waveguide component and should be corrected using normal corrective maintenance procedures.

**NOTE**

The RF radiation leakage check should also be checked with the transmitter operating normally through the antenna in wide pulse and then into the dummy load in both narrow and wide pulse. Redundant sites should check both channels into the antenna and

dummy loads in both wide and narrow pulse. The off-line operate (OLOP) and select program (SELP) commands will be used in the following steps to configure the equipment to perform the RF radiation leakage checks. In OLOP, the transmitter will fire for approximately one minute, then shut off for one minute, then repeat the cycle.

5. To configure the waveguide components and transmitter for firing into the antenna and dummy load in both narrow and wide pulse, perform the following steps at the RDA Applications Terminal, command and parameter lines:

   a. Enter **STBY <Return>** to place the transmitter in standby.

   b. Enter **SELP <Tab> 31 <Return>** to select wide pulse mode.

   c. Enter **OPER <Return>**. Repeat step 4 with RF transmitting to the antenna in wide pulse.

   d. Enter **STBY <Return>** to place the transmitter in standby.

   e. Enter **OLOP <Return>**. Repeat step 4 with RF transmitting to the dummy load in wide pulse.

   f. Enter **STBY <Return>** to place the transmitter in standby.

   g. Enter **SELP <Tab> 21 <Return>** to select narrow pulse mode.

   h. Enter **OLOP <Return>**. Repeat step 4 with RF transmitting to the dummy load in narrow pulse.

   i. Enter **STBY <Return>** to terminate off-line operate function and place the transmitter in standby.

   j. Enter **OPER <Return>** and return system to remote control.

6. Redundant sites, switch control to opposite channel and perform steps 4 through 5.j to check RF radiation leakage on those waveguide components. Upon completion of checks, reconfigure equipment to original channel or as directed.

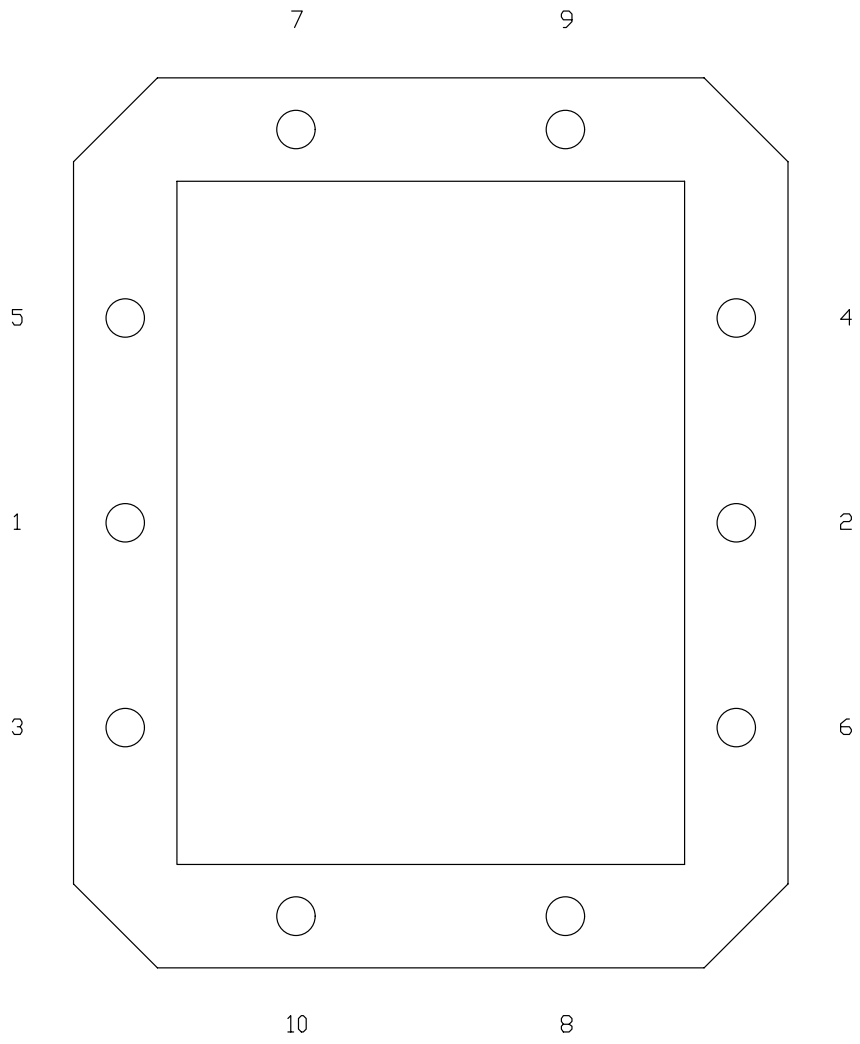


NX1999

Figure 6-42A. Waveguide Flange Hardware Tightening Sequence

Table 6-20. Waveguide Cross Reference Index

| Reference Designator | Nomenclature | Fixed Value | Adaptation Parameter | Path Loss Meas. Ref. |
|---|---|---|---|---|
| WG1 thru WG18 | Miscellaneous WG (Up Tower) | | Part of TR25 | 6-6.32.4 |
| 1AT4 | TX PWR Monitor Coupling Attn | | TR32 | EHB 6-511, para. 7.8.6.10.2 |
| 1DC1/1DC101 | Bi-Directional Coupler Straight Through - FWD Power Port | -.05 | TR22 TR23 | 6-6.32.3 , and EHB 6-511, para. 7.8.6.10.2 |
| 1S1/1S101 | Waveguide Switch(es) | -.05 (-.10 for redundant) | TR24 | 6-6.32.3 |
| 1WG1/1WG101 | Miscellaneous WG | | Part of TR21 | 6-6.32.3 |
| 1WG2/1WG102 | Harmonic Filter | -.15 | TR18 | 6-6.32.3 |
| 1WG3/1WG103 | Miscellaneous WG | | Part of TR21 | 6-6.32.3 |
| 1WG4/1WG104 | Circulator (Shelter) | -.15 | TR19 | 6-6.32.3 |
| 1WG6/1WG106 | Spectrum Filter | -.20 (if installed) | TR20 | 6-6.32.3 |
| 1WG7/1WG107 | Miscellaneous WG (To Dummy Load) | | None | None |
| 1WG10 | Flex Waveguide | | Part of TR21 | 6-6.32.3 |
| 1WG11 | Waveguide Exiting Shelter | | Part of TR25 | 6-6.32.4 |
| 1WG12 thru 1WG14 | Miscellaneous WG (Redundant Chan. 1) | | Used in TR21 and TR25 calculations | 6-6.32.3 |

Table 6-20. Waveguide Cross Reference Index (continued)

| Reference Designator | Nomenclature | Fixed Value | Adaptation Parameter | Path Loss Meas. Ref. |
|---|---|---|---|---|
| 1WG15 | Miscellaneous WG (Redundant Chan. 2) | | Used in TR21 and TR25 calculations | 6-6.32.3 |
| 1WG16 | Miscellaneous WG (To Dummy Load) | | None | None |
| 1WG17 | Miscellaneous WG (Redundant Chan. 2) | | Used in TR21 and TR25 calculations | 6-6.32.3 |
| 1WG18 and 1WG19 | Miscellaneous WG (Redundant Chan. 2) | | Part of TR21 | 6-6.32.3 |
| 2A1A4 | AZ Rotary Joint | -.05 | TR26 | 6-6.32.5 |
| 2A1A5 | EL Rotary Joint | -.05 | TR28 | 6-6.32.5 |
| 2A1S1 | Pedestal WG Switch (Redundant Only) | | Part of TR34 | None |
| 2A1WG1 thru 2A1WG5 | Miscellaneous WG | | Part of TR27 | 6-6.32.5 |
| 2A1WG05 | Pedestal Circulator | -.20 (-.25 for Redundant) | TR34 | None |
| 2A1WG06 and 2A1WG07 | Miscellaneous WG (To Loads, Redundant only) | | None | None |
| 2A1WG10 | EL Rotary Joint Support | | None | None |
| 2A2A1 | Feedhorn | -.10 | TR31 | None |
| 2A2A1WG1 | Miscellaneous WG To Feedhorn | | Part of TR31 | None |

Table 6-20. Waveguide Cross Reference Index (continued)

| Reference Designator | Nomenclature | Fixed Value | Adaptation Parameter | Path Loss Meas. Ref. |
|---|---|---|---|---|
| 2A2WG4 | Miscellaneous WG To Feedhorn | | Part of TR31 | None |
| 2A6 | Two-Way Power Splitter (Redundant Only) | | TR33 | 6-6.32.5 |
| 2AT1 | Ant PWR Mon Coupling Attn (Non-Redundant) | | TR33 | 6-6.32.5 |
| 2DC1 | Ant PWR Mon Coupling Straight Through - Ant PWR Mon Port | -.10 | TR29<br>TR30 | 6-6.32.5<br>6-6.32.5 |
| 2WG1 | Ant Power Monitor WG Adapter | | Part of TR30 | None |
| 2WG2 | Miscellaneous WG | | Part of TR29 | None |
| 2WG3 and 2WG4 | Miscellaneous WG To Feedhorn | | Part of TR31 | None |
| 3A6 | TX Arc Detector | -.05 | TR17 | 6-6.32.3 |

6-5.54 WAVEGUIDE PRESSURIZATION UNIT UD6/106 REPLACEMENT PROCEDURE.

Two technicians are required for this procedure.

6-5.54.1 Equipment and Tools Required.

1. Screwdriver set, flat-tip
2. Wrench set, combination
3. Nut driver set
4. Wrench set, adjustable.

6-5.54.2 Initial Conditions/Preliminary Setup.

**WARNING**

Failure to perform applicable shutdown steps in paragraph 6-6.15.3 could cause serious injury or death.

**NOTE**

Refer to paragraph 6-5.2 for special considerations for replacement procedures.

1. Perform steps 1 through 4 of paragraph 6-6.15.3 to shut down related waveguide equipment and deenergize Waveguide Pressurization Unit.

6-5.54.3 Replacement Procedure.

1. In RDA equipment shelter, locate pressurization unit behind the transmitter.
2. At the front panel, put the ON/OFF power switch to OFF.
3. Open the front panel, using a flat-tip screwdriver, and remove 115 Vac power connection from TB1 as follows:
   a. Remove and tag wire from terminal 4.
   b. Remove and tag neutral wire from terminal 6.
   c. Remove and tag wire from terminal 7.
4. Remove the strain relief where power cable enters cabinet and remove power cable through the power cable entrance.
5. At the air outlet fitting on the right side of the unit, hold the cabinet outlet fitting with a wrench when removing the air tube fitting from the outlet. Use second wrench on air tube fitting to prevent tube damage. Fittings will vary but will be nominally 1/2 inch (high and low pressure fittings).

**NOTE**

At sites without spectrum filters, a jumper will be installed on TB2, between pins 5 and 6. Verify replacement unit has the jumper installed. Sites with spectrum filters do not require the jumper and it should be removed from the replacement unit.

6. Open the front panel and, using a flat-blade screwdriver, remove the wires from the alarm cable connected to TB2. Tag wires if necessary.

7. Remove the strain relief where the cable enters the cabinet and remove the cable through the alarm cord entrance.

**CAUTION**

Two people are required to safely perform step 8.

8. Remove the two 1/2-inch nuts, flat washers, and lock washers from the bottom outside of the unit that attach unit to wall. At the inside of the cabinet, remove the two 1/2-inch nuts, flat washers, and lock washers at the upper corners of the cabinet that attach unit to wall.

9. Remove the unit from the bolts and set on bench.

**NOTES**

When installing a new unit, ensure that the metal hose clamp and wooden shipping block are removed from the compressor.

At sites without spectrum filters, ensure a jumper is installed on TB2, between pins 5 and 6 on the new unit. At sites with spectrum filters, remove the jumper from TB2, between pins 5 and 6 from the new unit, if installed, and reinstall it on the defective unit being returned.

10. Reverse steps 2 through 9 to install new unit.

11. Perform step 10 of paragraph 6-6.16.3 to energize Waveguide Pressurization Unit.

**NOTE**

Adjust pressure slowly, allowing time for the unit to adjust.

12. After restarting the unit, make a preliminary adjustment of the LO line pressure to 3 PSIG and tighten the locking ring.

13. Make a preliminary adjustment of the Line Pressure to 27 PSIG and tighten the locking ring.

14. The unit may initially demonstrate moisture accumulation or moisture migration within the desiccant towers and the humidity sensor cartridge. The incidence of this

is dependent on the conditions and duration of shipping and storage and can result in a temporary Humidity Alarm condition. If this occurs, open the cabinet door and move the humidistat test toggle to the CLEAR position and hold for several seconds. The Humidity Alarm should clear while the toggle is held and released. The alarm may return when the toggle is released if the dew point was not lowered below the alarm level point. If the alarm returns, and the system to be pressurized is very pressure tight, temporarily loosen the output tube to cause a minor leak. This will cause the dehydrator to operate more frequently. Also, the dehydrator can be caused to run continuously by venting air from the Schrader test valve on the back of the Tank Pressure Gauge. If a temporary leak is created to clear the Humidity Alarm and/or to purge the user system, eliminate the leak when the Humidity Alarm has been inactive for several hours.

15. After the user system LO line pressure has stabilized at 3 PSIG, push the white locking ring on the LO Line Pressure Regulator forward to unlock the adjuster. Vary the line pressure to verify the operation of the line pressure alarm switch at 1.5 PSIG. (Refer to index in the Model HA-4 Dehydrator Manual NWS EHB 6-512 or Model HA4X2 Dual Outlet Compressor Dehydrator Manual NWS EHB 6-512-1.)

16. After the HI line pressure has stabilized at 25 ±2 PSIG, push the white locking ring on the HI Line Pressure Regulator forward to unlock the adjuster. Vary the line pressure to verify the operation of the alarm pressure switch at 20 PSIG. (Refer to index in the Model HA-4 Dehydrator Manual NWS EHB 6-512 or Model HA4X2 Dual Outlet Compressor Dehydrator Manual NWS EHB 6-512-1.)

17. Observe the Tank Pressure Gauge on the front panel of the dehydrator. The compressor should start to operate when the Tank Pressure Gauge drops to 35 PSIG and stops when 60 PSIG is reached. If the limits are more than 2 PSIG outside of those specified, or if the Tank Pressure Gauge does not reach the upper limit (and the compressor does not stop), it may be necessary to adjust the Tank Pressure Switch. (Refer to index in the Model HA-4 Dehydrator Manual NWS EHB 6-512 or Model HA4X2 Dual Outlet Compressor Dehydrator Manual NWS EHB 6-512-1.)

18. Make final adjustment of the HI and LO Line Pressure Regulator to the desired value in accordance with the line pressure adjustment procedure in the Dehydrator Manual NWS EHB 6-512 or Model HA4X2 Dual Outlet Compressor Dehydrator Manual NWS EHB 6-512-1.

19. Perform steps 5 through 6.c of paragraph 6-6.15.3 to secure pedestal power.

20. In the pedestal riser, locate Receiver Protector UD2A3. Loosen the bolts on J1, the waveguide input to the Receiver Protector. This is done to allow some air to leak out at this end of the waveguide run, yet allow the Waveguide Pressurization Unit to build pressure in the waveguide run.

21. After 1 hour of purging the system, tighten the bolts on J1 of the Receiver Protector.

22. Perform steps 5.d through 14 of paragraph 6-6.16.3 to restore system operation.

6-5.55 POWER SUPPLIES UD4PS1, PS2, AND PS4-PS9 REPLACEMENT PROCEDURE.

One technician is required for this procedure.

6-5.55.1 Equipment and Tools Required.

1. Screwdriver set, Phillips-tip
2. Multimeter, Digital.

6-5.55.2 Initial Conditions/Preliminary Setup.

**WARNING**

Failure to perform applicable shutdown steps in Table 6-13 could cause serious injury or death.

**NOTE**

Refer to paragraph 6-5.2 for special considerations for replacement procedures.

1. Perform steps 1 through 6 of Table 6-13 to shut down Receiver Cabinet UD4.
2. Open the front UD4 cabinet door and locate the appropriate power supply.

6-5.55.3 Replacement Procedure.

1. Remove the screws holding the power supply-mounted slide using the proper screwdriver.
2. Slide the power supply-mounted slide forward until the slide stops are engaged (a loud click will be heard).
3. Remove terminal board protective cover on TB1 using the proper screwdriver.
4. Disconnect leads on TB1 (tag all leads if needed) using the proper screwdriver.
5. Remove terminal board protective cover on TB2 using the proper screwdriver.

**NOTE**

FAA Redundant systems have additional connections for Remote Monitoring Subsystem (RMS).

6. Disconnect leads on TB2 (tag all leads if needed) using the proper screwdriver.
7. For UD4PS1 only, repeat steps 5 and 6 for TB3.
8. Locate the power supply slide mounting screws on the bottom of the power supply.
9. Remove the mounting screws using the proper screwdriver.

10. Remove defective power supply and set aside.
11. Mount new power supply on slide and reverse steps 1 through 9 to install.
12. Perform steps 13 and 17 of Table 6-15 to turn on receiver cabinet.
13. Refer to paragraph 6-6.20 for component alignment.

6-5.56 +28 VDC POWER SUPPLY UD5PS1 REPLACEMENT PROCEDURE.

One technician is required for this procedure.

6-5.56.1 Equipment and Tools Required.

1. Screwdriver set, flat-tip
2. Screwdriver set, Phillips-tip
3. Multimeter, Digital.

6-5.56.2 Initial Conditions/Preliminary Setup.

**WARNING**

Failure to perform applicable shutdown steps in Table 6-13 could cause serious injury or death.

**NOTE**

Refer to paragraph 6-5.2 for special considerations for replacement procedures.

1. Open the left rear UD5 cabinet door and locate the power supply.
2. At the RDA Maintenance Panel UD5A2, set the DAU power switch to **OFF**.
3. Perform steps 1 through 5, 16, 17, 20, and 21 of Table 6-13 to shut down RDADP systems.

6-5.56.3 Replacement Procedure.

1. Remove the screws holding the power supply-mounted slide, using the proper screwdriver.
2. Slide the power supply-mounted slide forward until the slide stops are engaged (a loud click will be heard).
3. Remove the input power protective cover screws using the proper screwdriver and set cover aside.
4. Remove the input power wires from their terminal block using the proper screwdriver.

**NOTE**

For FAA Redundant sites there is one additional connection for the Remote Monitoring Subsystem (RMS).

5. Remove the wires from the output terminals (+) and (-) using the proper screwdriver.
6. Remove the safety GND wires using the proper screwdriver.
7. Locate the power supply slide mounting screws on the bottom of the power supply.
8. Remove the mounting screws using the proper screwdriver.
9. Remove defective power supply and set it aside.
10. Reverse steps 1 through 8 for installation.
11. Perform steps 8, 9, 12, and 15 through 17 of Table 6-15 to turn on RDADP systems.
12. Refer to paragraph 6-6.21 for component alignment.

6-5.57 ±15 VDC AND +5 VDC POWER SUPPLIES UD5PS2/PS3 REPLACEMENT PROCEDURE.

One technician is required for this procedure.

6-5.57.1 Equipment and Tools Required.

1. Screwdriver set, Phillips-tip
2. Screwdriver set, flat-tip
3. Multimeter, Digital.

6-5.57.2 Initial Conditions/Preliminary Setup.

**WARNING**

Failure to perform applicable shutdown steps in Table 6-13 could cause serious injury or death.

**NOTE**

Refer to paragraph 6-5.2 for special considerations for replacement procedures.

1. Open the left rear UD5 cabinet door and locate the appropriate power supply.
2. At the RDA Maintenance Panel UD5A2, set the DAU power switch to **OFF**.
3. Perform steps 1 through 5, 16, 17, 20, and 21 of Table 6-13 to shut down RDADP systems.

6-5.57.3 Replacement Procedure.

1. Remove screws holding the power supply slides to cabinet using the proper screwdriver.
2. Slide power supply forward until slide stops are engaged (a loud click will be heard).
3. Remove terminal board protective cover on TB1 using the proper screwdriver.
4. Disconnect leads on TB1 (tag all leads if needed) using proper screwdriver.
5. Remove terminal board protective cover on TB2 using the proper screwdriver.

**NOTE**

For FAA Redundant sites there is one additional connection for the Remote Monitoring Subsystem (RMS).

6. Disconnect leads on TB2 (tag all leads if needed) using the proper screwdriver.
7. Locate power supply slide mounting screws on bottom of power supply.
8. Remove the four mounting screws using the proper screwdriver.
9. Remove power supply and set it aside.
10. Reverse steps 1 through 9 for installation.
11. Perform steps 8, 9, 12, and 15 through 17 of Table 6-15 to turn on RDADP systems.
12. Refer to paragraph 6-6.21 for component alignment.

6-5.58 +5 VDC POWER SUPPLY UD5PS4 REPLACEMENT PROCEDURE.

One technician is required for this procedure.

6-5.58.1 Equipment and Tools Required.

1. Nut driver set
2. Screwdriver set, Phillips-tip
3. Screwdriver set, flat-tip
4. Multimeter, Digital.

6-5.58.2 Initial Conditions/Preliminary Setup.

**WARNING**

Failure to perform applicable shutdown steps in Table 6-13 could cause serious injury or death.

**NOTE**

Refer to paragraph 6-5.2 for special considerations for replacement procedures.

1. Open the left rear UD5 cabinet door and locate the power supply.
2. Perform steps 1 through 5, 16, 17, 20, and 21 of Table 6-13 to shut down RDADP systems.

6-5.58.3 Replacement Procedure.

1. Remove input power line protective cover screws using the proper screwdriver and set cover aside.
2. Remove the wires at the terminal board using the proper screwdriver.

**NOTE**

For FAA Redundant sites there is one additional connection for the Remote Monitoring Subsystem (RMS).

3. Remove all cables at the (+) and (-) output terminals using the proper nut driver.
4. Remove the power supply ground wire using the proper nut driver.

**NOTE**

Output sensors (+)s and (-)s must be the same on the replacement unit.

5. Locate the power supply mounting screws on the bottom of the power supply.
6. Remove the mounting screws using the proper screwdriver.
7. Remove defective power supply and set it aside.
8. Reverse steps 1 through 7 for installation.
9. Perform steps 8, 9, 12, and 15 through 17 of Table 6-15 to turn on RDADP systems.
10. Refer to paragraph 6-6.21 for component alignment.

6-5.59 SWING-OUT POWER SUBSYSTEM UD5PS5 REPLACEMENT PROCEDURES.

Paragraphs 6-5.59.3 through 6-5.59.8 provide replacement procedures for the Swing-Out Power Subsystem UD5PS5 LRUs listed below:

- Power Subsystem Enclosure
- AC Power Module A1
- DC Power Supply A2

- CDS Master Module A3
- Power Supply Fan Tray A4
- 12 Volt DC Battery A1BT1

Perform the initial conditions/preliminary setup procedures in paragraph 6-5.59.2 and applicable replacement procedures as necessary. These procedures require one technician except for the Power Subsystem Enclosure and DC Power Supply procedures which require two technicians.

6-5.59.1 Equipment and Tools Required.

1. ESD wrist strap with clip lead
2. Screwdriver set, Phillips-tip
3. Screwdriver set, flat-tip
4. Nutdriver set
5. Plastic tie-wraps (Qty 10)

6-5.59.2 Initial Conditions/Preliminary Setup.

**WARNING**

Failure to perform shutdown steps in Table 6-13 could cause serious injury or death.

**NOTE**

Refer to paragraph 6-5.2 for special consideration for replacement procedures.

1. Open the left rear UD5 cabinet door and locate the power subsystem UD5PS5.
2. Perform steps 1 through 5 and 16 through 20 in Table 6-13 to shut down RDADP systems.

6-5.59.3 Power Subsystem Enclosure UD5PS5 Replacement Procedure.

1. Perform initial conditions/preliminary setup procedures in paragraph 6-5.59.2 if not previously performed.

**ESD** **CAUTION** **ESD**

All WSR-88D printed circuit cards are electrostatic sensitive devices which require special handling. Refer to paragraph 6-5.2.6 .

2. Put on ESD wrist strap and attach clip lead to cabinet chassis.

3. Swing out enclosure to gain access to back of unit.
4. Unplug power subsystem AC-line cord from J5 of Power Distribution Panel UD5A14.
5. Cut tie-wraps that gang power cord to other cables so that power cord hangs freely from power subsystem enclosure.
6. Remove six Phillips-head screws securing metal cover on right side of PS5 (over the five #2-gauge cable and remove cover.
7. Remove five #2-gauge cables from back of enclosure using proper nutdriver.
8. Observe three ribbon-cable connectors located at back of enclosure. Note their connections, which should be as follows:
   - 17-709 connected to J5
   - 17-705 connected to J2
   - P6 connected to J6

   Note that cables are oriented so that red line on bottom of ribbon cable feeds into bottom of jack.
9. Unplug three ribbon-cable connectors from back of enclosure.
10. Observe three connectorized cables and ground wires located at back of power subsystem enclosure. Note their hook-ups, which should be as follows:
    - P7 connected to J7
    - P7/8 connected to back of AC power supply.
    - P8 connected to J8
11. Unplug three connectorized cables and unscrew ground wires.

**CAUTION**

Power supplies are heavy. Two technicians are required to support the power supplies during both removal and installation procedures.

12. Remove all screws from the hinged edge of the power subsystem enclosure (with the second technician holding unit), using the proper screwdriver.
13. Remove enclosure from rack.
14. Set enclosure aside.
15. Mount replacement power subsystem enclosure (with assistance from second technician) using the proper screwdriver. Align the holes on the hinged and unhinged edges with the holes on the cabinet's vertical mounting rails.
16. Secure the hinged edge with four to six Phillips-head screws. The unhinged edge has two captive screws to secure the power subsystem in the closed position.

17. Plug power subsystem AC-line cord into jack J5 of Power Distribution Panel UD5A14. Re-gang power cord to cables using new tie-wraps.

18. Reinstall cables and rear cover removed in steps 5 through 11 at back of enclosure.

19. At the Secondary Power Distribution Panel, place the appropriate RDASC Processor ganged circuit breaker (see Table 6-15, step 8) to the **ON** position.

20. At the RDA Cabinet AC Power Distribution Panel UD5/105A14, place the Main AC circuit breaker CB1 to the **ON** (|) position.

21. At the Swingout Power Supply UD5/105PS5, switch circuit breaker CB1-3 to the **ON** (|) position.

22. At the CDS Master Module front panel, ensure only the green POWER and red L1 LEDs are lit. Any other combination of lit LEDs indicates a fault condition. Refer to Table 4-6.

**NOTE**

FAA Redundant - Ensure A/B switch is in the “B” position.
NWS Redundant - Ensure A/B switch is in the “A” (Local) position.

23. At the RDA System Console, if the CDS> prompt is not displayed, **simultaneously** press the **<CTRL>** and **<V>** keys twice, then press the **<Return>** key.

24. At the CDS> prompt, enter **KEY 1,RDA** and press the **<Return>** key.

**NOTE**

In the following step, if any typing errors occur while entering the set parameters, the entire set command will have to be re-typed. Using the <Backspace> key will not rectify the mistake.

25. At the CDS> prompt, enter
**SET 1,4,M32ØØ,Ø,254,E,W,58,D9,D8,FØ,DEFAULT.OS,CPU**
and press the **<Return>** key.

26. At the CDS> prompt, enter **USING 1,4<Return>** to select the proper slot for the CPU.

27. At the CDS> prompt, enter **SET 1,6,CMM,ØØØ,E,Ø<Return>** to set the CMM configuration.

28. At the CDS> prompt, enter **SET 1,5,DMI<Return>** to set the DMI to slot 5.

29. At the CDS> prompt, enter **PO ON<Return>** to power on UD5PS5.

30. At the CDS> prompt, enter **STA 1,28<Return>** to check the status of UD5PS5. The Output Power Status Menu will be displayed.

31. Verify the following expected values are displayed on the Output Power Status Menu:

    a. P5 — 5.05 Vdc ± .25

    b. P5U — 5.05 Vdc ± .25

    c. P12 — 12.0 Vdc ± .6

    d. FP12 — 12.0 Vdc ± .6

32. Verify that all the fans are operational on the Output Power Status Menu.

33. At the `CDS>` prompt, enter **CO<Return>** to return to the `*` prompt.

34. At the `*` prompt, enter **RDAUP<Return>**. The loading of the Applications program takes approximately one minute to load.

35. Press the **<Shift>** and **<Port>** keys **simultaneously** to shift to the RDA Applications Terminal.

36. Perform appropriate substeps of steps 25 and 26 in Table 6-15 to return system to normal operation.

6-5.59.4 AC Power Module UD5PS5A1 Replacement Procedure.

1. Perform initial conditions preliminary setup procedures of paragraph 6-5.59.2 if not previously performed.

**ESD** **CAUTION** **ESD**

All WSR-88D printed circuit cards are electrostatic sensitive devices which require special handling. Refer to paragraph 6-5.2.6 .

2. Put on ESD wrist strap and attach clip lead to cabinet chassis.

3. Unplug the power subsystem AC-line cord from its power source at J5 of Power Distribution Panel UD5A14. Cut tie-wraps that gang AC-line cord to other cables so that cord hangs freely from AC module.

4. Unplug two branches of CONN 5 from the right side of the DC Power Supply.

5. Remove five screws securing AC Power Module to the power subsystem enclosure; one at the AC Power Module front panel and four underneath the enclosure shelf. Remove screw securing ground wire of AC Power Module to power subsystem enclosure.

6. Unplug P7/P8 from J7 at rear of AC Power Module.

7. Unplug P2 from J1 on the inside of the backplane.

8. Remove the front support leg from the enclosure by removing the four screws holding it in place.
9. Remove the AC Power Module from the enclosure and set aside.
10. Mount replacement AC Power Module onto the enclosure.
11. Reconnect P2 to J1 on the inside of the backplane.
12. Reinstall the front support leg to the enclosure using the four screws removed in step 8.
13. Reconnect plug P7/P8 to J7 at rear of AC Power Module.
14. Reinstall the five screws securing AC Power Module to the power subsystem enclosure; one at the AC Power Module front panel and four underneath the enclosure shelf. Reinstall ground wire of AC Power Module to power subsystem enclosure using screw removed earlier.
15. Reconnect the two branches of CONN 5 to the DC power supply.
16. Reconnect power subsystem AC-line cord to jack J5 of Power Distribution Panel UD5A14. Re-gang power cord cables using new tie wraps.
17. At the Secondary Power Distribution Panel, place the appropriate RDASC Processor ganged circuit breaker (See Table 6-15, step 8) to the **ON** position.
18. At the RDA Cabinet AC Power Distribution Panel UD5/105A14, place the Main AC circuit breaker CB1 to the **ON** (|) position.
19. At the Swingout Power Supply UD5/105PS5, switch circuit breaker CB1-3 to the **ON** (|) position.
20. At the CDS Master Module front panel, ensure only the green POWER and red L1 LEDs are lit. Any other combination of lit LEDs indicates a fault condition. Refer to Table 4-6.

**NOTE**

FAA Redundant - Ensure A/B switch is in the “B” position.
NWS Redundant - Ensure A/B switch is in the “A” (Local) position.

21. At the RDA System Console, if the `CDS>` prompt is not displayed, **simultaneously** press the **<CTRL>** and **<V>** keys twice, then press the **<Return>** key.
22. At the `CDS>` prompt, enter **KEY 1,RDA** and press the **<Return>** key.
23. At the `CDS>` prompt, enter **PO ON<Return>** to power on UD5PS5.
24. At the `CDS>` prompt, enter **STA 1,28<Return>** to check the status of UD5PS5. The Output Power Status Menu will be displayed.

25. Verify the following expected values are displayed on the Output Power Status Menu:

    a. P5 5.05 Vdc ± .25

    b. P5U 5.05 Vdc ± .25

    c. P12 12.0 Vdc ± .6

    d. FP12 12.0 Vdc ± .6

26. Verify that all the fans are operational on the Output Power Status Menu.

27. At the CDS> prompt, enter **CO<Return>** to return to the * prompt.

28. At the * prompt, enter **RDAUP<Return>**. The loading of the Applications program takes approximately one minute to load.

29. Press the **<Shift>** and **<Port>** keys **simultaneously** to shift to the RDA Applications Terminal.

30. Perform appropriate substeps of steps 25 and 26 in Table 6-15 to return system to normal operation.

6-5.59.5 AC Module 12 Volt Rechargeable Battery UD5PS5A1BT1 Replacement Procedure.

1. Perform steps 1 through 9 of paragraph 6-5.59.4 to remove the AC Power Module.
2. Turn AC Power Module on its side to gain access to the 12 Volt battery.
3. Remove the two mounting screws holding the battery bracket in place. Then remove the mounting bracket to free the battery.
4. Disconnect the leads from the battery and remove the battery from the AC Power Module.
5. Connect the leads to the replacement battery and put the battery back inside the AC Power Module.
6. Reposition the mounting bracket over the replacement battery until the mounting holes are aligned. Install the two mounting screws that secure the battery bracket.
7. Perform steps 10 through 30 of paragraph 6-5.59.4 to re-install the AC Power Module, perform a status check, and return system to normal operation.

6-5.59.6 DC Power Supply UD5PS5A2 Replacement Procedure.

1. Perform initial conditions preliminary setup procedures of paragraph 6-5.59.2 if not previously performed.

**ESD** **CAUTION** **ESD**

All WSR-88D printed circuit cards are electrostatic sensitive devices which require special handling. Refer to paragraph 6-5.2.6 .

2. Put on ESD wrist strap and attach clip lead to cabinet chassis.
3. Unplug the two branches of CONN 5 from the power supply's front panel.
4. Remove the six Phillips-head screws at rear of unit holding metal cover over output cables and remove cover.
5. Remove the three screws from the outside of the backplane.
6. Remove the clamp on the top front edge of the enclosure by removing two Phillips-head screws.
7. Disengage the power supply connectors from the backplane by gently pulling power supply.
8. Slide the power supply out of the enclosure and set aside.
9. Slide the replacement power supply into the top compartment of the enclosure.
10. Apply enough pressure to properly seat the power supply connectors to the backplane.
11. Reinstall the clamp on the top edge of the enclosure using Phillips-head screws.
12. Secure the power supply to the backplane with the three screws removed in step 5.
13. Reinstall the metal cover over the output cables at the rear of the unit and secure with screws removed in step 4.
14. Plug the two branches of CONN 5 from the AC module into the front panel of the DC Power Supply. Use the DC Power Supply front panel labels for the proper plug orientation.
15. At the Secondary Power Distribution Panel, place the appropriate RDASC Processor ganged circuit breaker (See Table 6-15, step 8) to the **ON** position.
16. At the RDA Cabinet AC Power Distribution Panel UD5/105A14, place the Main AC circuit breaker CB1 to the **ON** (|) position.
17. At the Swingout Power Supply UD5/105PS5, switch circuit breaker CB1-3 to the **ON** (|) position.
18. At the CDS Master Module front panel, ensure only the green POWER and red L1 LEDs are lit. Any other combination of lit LEDs indicates a fault condition. Refer to Table 4-6.

**NOTE**

FAA Redundant - Ensure A/B switch is in the "B" position.
NWS Redundant - Ensure A/B switch is in the "A" (Local) position.

19. At the RDA System Console, if the CDS> prompt is not displayed, **simultaneously** press the **<CTRL>** and **<V>** keys twice, then press the **<Return>** key.

20. At the CDS> prompt, enter **KEY 1,RDA** and press the **<Return>** key.

21. At the CDS> prompt, enter **PO ON<Return>** to power on UD5PS5.

22. At the CDS> prompt, enter **STA 1,28<Return>** to check the status of UD5PS5. The Output Power Status Menu will be displayed.

23. Verify the following expected values are displayed on the Output Power Status Menu:

    a. P5 — 5.05 Vdc ± .25

    b. P5U — 5.05 Vdc ± .25

    c. P12 — 12.0 Vdc ± .6

    d. FP12 — 12.0 Vdc ± .6

24. Verify that all the fans are operational on the Output Power Status Menu.

25. At the CDS> prompt, enter **CO<Return>** to return to the * prompt.

26. At the * prompt, enter **RDAUP<Return>**. The loading of the Applications program takes approximately one minute to load.

27. Press the **<Shift>** and **<Port>** keys **simultaneously** to shift to the RDA Applications Terminal.

28. Perform appropriate substeps of steps 25 and 26 in Table 6-15 to return system to normal operation.

6-5.59.7 CDS Master Module UD5PS5A3 Replacement Procedure.

1. Perform initial conditions/preliminary setup procedures of paragraph 6-5.59.2 if not previously performed.

**ESD** **CAUTION** **ESD**

All WSR-88D printed circuit cards are electrostatic sensitive devices which require special handling. Refer to paragraph 6-5.2.6 .

2. Put on ESD wrist strap and attach clip lead to cabinet chassis.

3. Remove the two screws from the CDS Master Module front panel.

**NOTE**

CDS Master Module is difficult to remove.

4. Slide the CDS Master Module out of the enclosure and set aside.
5. Set DIP switch S3 and front panel switches as per Figure 6-43 on replacement module.
6. Install the replacement CDS Master Module using the guide plate on the floor of the enclosure shelf to properly place the module in the enclosure. Ensure that the CDS Master Module mates with the guide pins and connects to the backplane.
7. Secure the CDS Master Module front panel with the two screws removed in step 3.
8. At the Secondary Power Distribution Panel, place the appropriate RDASC Processor ganged circuit breaker (See Table 6-15, step 8) to the **ON** position.
9. At the RDA Cabinet AC Power Distribution Panel UD5/105A14, place the Main AC circuit breaker CB1 to the **ON** ( | ) position.
10. At the Swingout Power Supply UD5/105PS5, switch circuit breaker CB1-3 to the **ON** ( | ) position.
11. At the CDS Master Module front panel, ensure only the green POWER and red L1 LEDs are lit. Any other combination of lit LEDs indicates a fault condition.

**NOTE**

FAA Redundant - Ensure A/B switch is in the “B” position.
NWS Redundant - Ensure A/B switch is in the “A” (LOCAL) position.

12. At the RDA System Console, if the CDS> prompt is not displayed, **simultaneously** press the **<CTRL>** and **<V>** keys twice, then press the **<Return>** key.
13. At the CDS> prompt, enter **KEY 1,RDA** and press the **<Return>** key.

**NOTE**

In the following step, if any typing errors occur while entering the set parameters, the entire set command string will have to be re-typed. Using the <backspace> key will not rectify the mistake.

14. At the CDS> prompt, enter
**SET 1,4,M32ØØ,Ø,254,E,W,58,D9,D8,FØ,DEFAULT.OS,CPU**
and press the **<Return>** key.
15. At the CDS> prompt, enter **USING 1,4<Return>** to select the proper slot for the CPU.
16. At the CDS> prompt, enter **SET 1,6,CMM,ØØØ,E,Ø<Return>** to set the CMM configuration.
17. At the CDS> prompt, enter **SET 1,5,DMI<Return>** to set the DMI configuration.

18. At the `CDS>` prompt, enter **PO ON<Return>** to return the system to normal operations.

19. At the `CDS>` prompt, enter **CO<Return>** to return to the `*` prompt.

20. At the `*` prompt, enter **RDAUP<Return>**. The loading of the Applications program takes approximately one minute to load.

21. Press the **<Shift>** and **<Port>** keys **simultaneously** to shift to the RDA Applications Terminal.

22. Perform appropriate substeps of steps 25 and 26 in Table 6-15 to return system to normal operation.

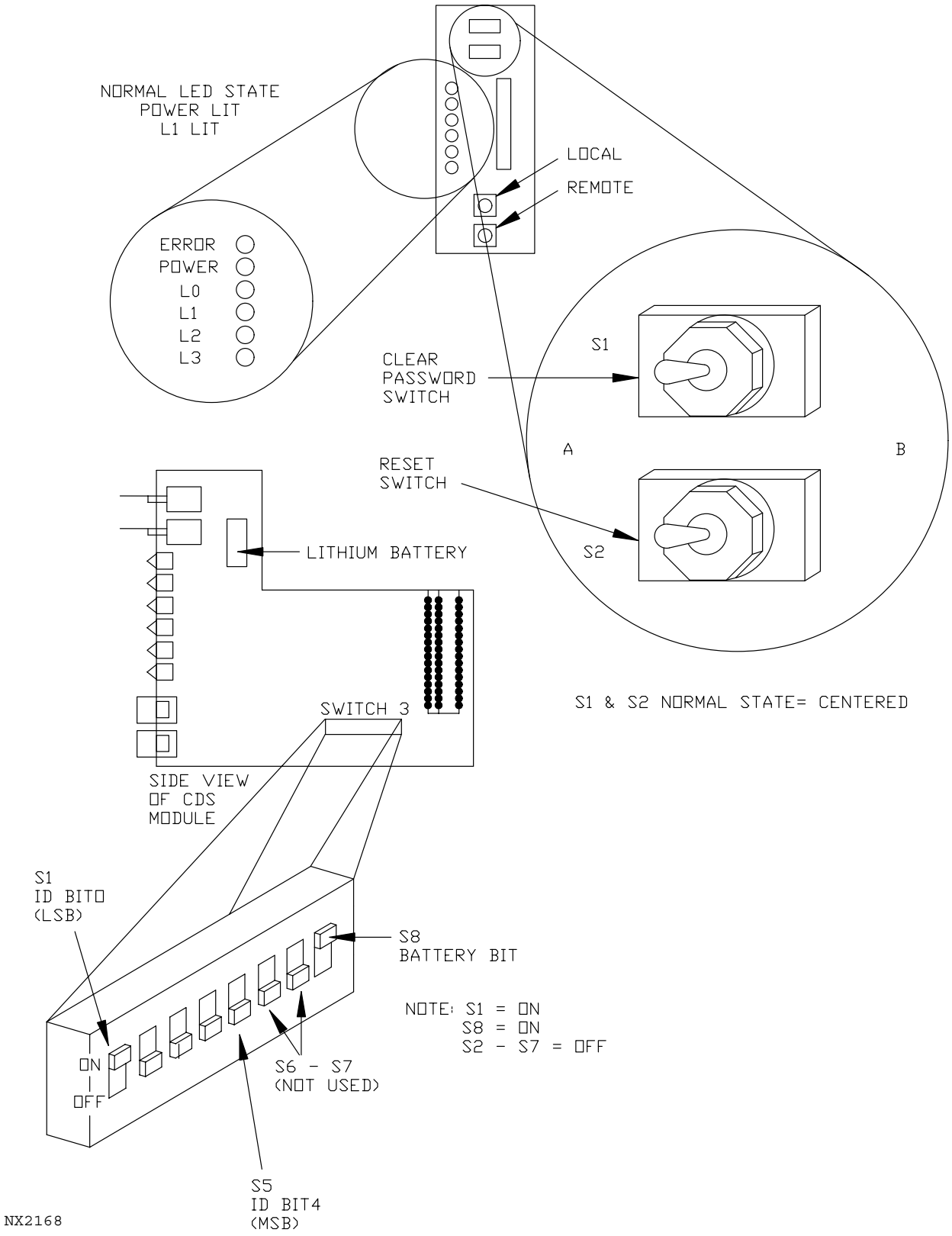


Figure 6-43. CDS Master Module UD5PS5A3 Strapping/Switch Settings

6-5.59.8 DC Power Supply Fan Tray UD5PS5A4/Individual Fan UD5PS5A4B1/B2 Replacement Procedure.

1. Perform initial conditions/preliminary setup procedures of paragraph 6-5.59.2 if not previously performed.
2. Locate and remove four small screws holding fan tray to bottom of enclosure that holds DC Power Supply. (There are two screws on each side of enclosure.)
3. Unplug ganged, multicolored wires from circuit card at back of enclosure.
4. Slide power supply fan tray out from underneath enclosure and place on workbench.
5. Remove four screws holding faulty fan to fan tray. Ungang wires and remove fan from tray.
6. Install replacement fan onto fan tray and secure using four screws removed in step 5.
7. Slide power supply fan tray under enclosure.
8. Regang wires and plug into circuit card at back of enclosure.
9. Install fan tray to bottom of enclosure and secure using four small screws removed in step 2.
10. At the Secondary Power Distribution Panel, place the appropriate RDASC Processor ganged circuit breaker (See Table 6-15, step 8) to the **ON** position.
11. At the RDA Cabinet AC Power Distribution Panel UD5/105A14, place the Main AC circuit breaker CB1 to the **ON** (|) position.
12. At the Swingout Power Supply UD5/105PS5, switch circuit breaker CB1-3 to the **ON** (|) position.

**NOTE**

FAA Redundant - Ensure A/B switch is in the “B” position.
NWS Redundant - Ensure A/B switch is in the “A” (Local) position.

13. At the RDA System Console, if the `CDS>` prompt is not displayed, **simultaneously** press the **<CTRL>** and **<V>** keys twice, then press the **<Return>** key.
14. At the `CDS>` prompt, enter **KEY 1,RDA** and press the **<Return>** key.
15. At the `CDS>` prompt, enter **PO ON<Return>** to power on UD5PS5.
16. At the `CDS>` prompt, enter **STA 1,28<Return>** to check the status of UD5PS5. The Output Power Status Menu will be displayed.
17. Verify that all the fans are operational on the Output Power Status Menu.

18. At the CDS> prompt, enter **CO<Return>** to return to the * prompt.

19. At the * prompt, enter **RDAUP<Return>**. The loading of the Applications program takes approximately one minute to load.

20. Press the **<Shift>** and **<Port>** keys **simultaneously** to shift to the RDA Applications Terminal.

21. Perform appropriate substeps of steps 25 and 26 in Table 6-15 to return system to normal operation.

6-5.60 TEMPERATURE SENSE MODULE UD5A12A3 REPLACEMENT PROCEDURE.

One technician is required for this procedure.

6-5.60.1 Equipment and Tools Required.

1. Screwdriver set, flat-tip
2. ESD Component Handling kit.

6-5.60.2 Initial Conditions/Preliminary Setup.

**WARNING**

Failure to perform shutdown steps in Table 6-13 could cause serious injury or death.

**NOTE**

Refer to paragraph 6-5.2 for special consideration for replacement procedures.

1. Open the right front and left rear UD5 cabinet door and locate the temperature sense module, housed in the far left slot of the M3200 Processor Assembly UD5A12.
2. Perform steps 1 through 5, 16, 17, and 20 in Table 6-13 to shut down the RDASC Data Processor and Swingout Power Supply.

6-5.60.3 Replacement Procedure.

**ESD** **CAUTION** **ESD**

All WSR-88D printed circuit cards are electrostatic sensitive devices which require special handling. Refer to paragraph 6-5.2.6 .

1. Put on ESD wrist strap and attach clip lead to cabinet chassis.
2. Remove P5B from J5B on the front connector of the temperature sense module.

3. Remove the two flat-tip screws that hold the mounting bracket to the chassis front flange and remove the module. Set it aside.

4. Strap the new board in accordance with Figure 6-44.

5. Align the metal plate of the replacement temperature sense module with the top of the fourth slot from left of the M3200 Processor chassis, UD5A12.

6. Align the two holes in the mounting bracket with the holes on the front flange of the chassis and secure with the screws provided.

7. Reconnect P5B to J5B on the front of the temperature sense module.

8. At the Secondary Power Distribution Panel, place the appropriate RDASC Processor ganged circuit breaker (See Table 6-15, step 8) to the **ON** position.

9. At the Swingout Power Supply UD5/105PS5, switch circuit breaker CB1-3 to the ON (|) position.

**NOTE**

FAA Redundant - Ensure A/B switch is in the "B" position.
NWS Redundant - Ensure A/B switch is in the "A" (Local) position.

10. At the RDA System Console, if the `CDS>` prompt is not displayed, **simultaneously** press the **<CTRL>** and **<V>** keys twice, then press the **<Return>** key.

11. At the `CDS>` prompt, enter **KEY 1,RDA** and press the **<Return>** key.

12. At the `CDS>` prompt, enter **PO ON<Return>** to power on UD5PS5.

13. At the `CDS>` prompt, enter **STA 1,28<Return>**. The Output Power Status Menu will be displayed.

14. Verify an upper air temperature is displayed on the Output Power Status Menu.

15. At the `CDS>` prompt, enter **CO<Return>** to return to the `*` prompt.

16. At the `*` prompt, enter **RDAUP<Return>**. The loading of the Applications program takes approximately one minute to load.

17. Press the **<Shift>** and **<Port>** keys **simultaneously** to shift to the RDA Applications Terminal.

18. Perform appropriate substeps of steps 25 and 26 in Table 6-15 to return system to normal operation.

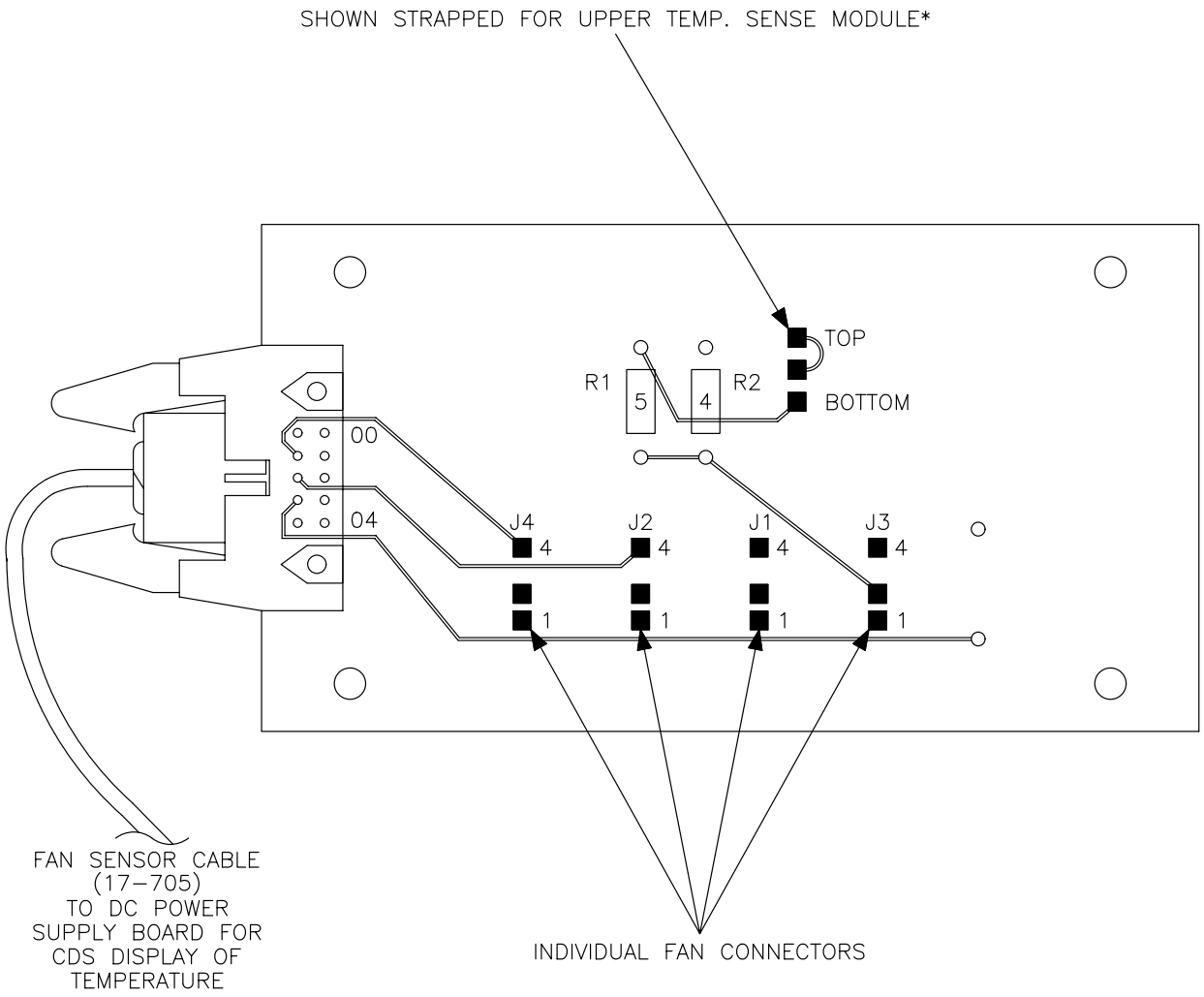


*NOTE: FOR UD5A13 FAN TRAY SENSOR BOARD, CENTER PIN IS ONLY STRAPPED TO BOTTOM PIN.

NX2170

Figure 6-44. Upper Temperature Sense Module UD5A12A3

6-5.61 CDS PATCH PANEL UD5A15 REPLACEMENT PROCEDURE.

One technician is required for this procedure.

6-5.61.1 Equipment and Tools Required.

1. Screwdriver set, Phillips-tip
2. Screwdriver set, flat-tip
3. ESD Component Handling Kit.

6-5.61.2 Initial Conditions/Preliminary Setup.

**WARNING**

Failure to perform shutdown procedure in Table 6-13 could cause serious injury or death.

**NOTE**

Read paragraph 6-5.2 for special considerations for replacement procedures.

1. Open the left rear UD5 cabinet door and locate the CDS Patch Panel UD5A15.
2. Perform steps 1 through 5, 16, 17, and 20 in Table 6-13 to power down the RDA Data Processor and Swingout Power Supply.

6-5.61.3 Replacement Procedure. (See Figure 4-3 and Figure 6-45 for assembly location.)

**ESD** **CAUTION** **ESD**

All WSR-88D printed circuit cards are electrostatic sensitive devices which require special handling. Refer to paragraph 6-5.2.6 .

**NOTE**

CDS Patch Panel circuit card is mounted upside down in cabinet.

1. Remove ground lug J18 from top right of patch panel using the proper screwdriver.

**NOTE**

The screws for J16 and J17 connectors are not captive screws and may fall down.

2. Remove connectors J16 and J17 and ground leads using the proper screwdriver and move cables out of the way.
3. Remove the ribbon cable retaining bar on right edge of CDS Patch Panel using the proper screwdriver.

**NOTE**

Do not allow cables to fall down inside rack.

4. Tag and remove the ribbon cable at the lower right side of the patch panel, being careful not to damage the pins.

**CAUTION**

The CDS board will fall out if it is not held during removal.

5. Remove the three screws, lockwashers, and flat washers holding the patch panel to the cabinet using the proper screwdriver and remove unit.
6. Reverse steps 1 through 5 to reinstall replacement CDS Patch Panel.
7. At the Secondary Power Distribution Panel, place the appropriate RDASC Processor ganged circuit breaker (See Table 6-15, step 8) to the **ON** position.
8. At the Swingout Power Supply UD5/105PS5, switch circuit breaker CB1-3 to the **ON** (|) position.

**NOTE**

FAA Redundant - Ensure A/B switch is in the “B” position.
NWS Redundant - Ensure A/B switch is in the “A” (Local) position.

9. At the RDA System Console, if the `CDS>` prompt is not displayed, **simultaneously** press the **<CTRL>** and **<V>** keys twice, then press the **<Return>** key.
10. At the `CDS>` prompt, enter **KEY 1,RDA** and press the **<Return>** key.
11. At the `CDS>` prompt, enter **PO ON<Return>** to power on UD5PS5.
12. At the `CDS>` prompt, enter **CO<Return>** to return to the `*` prompt.
13. At the `*` prompt, enter **RDAUP<Return>**. The loading of the Applications program takes approximately one minute to load.
14. Press the **<Shift>** and **<Port>** keys **simultaneously** to shift to the RDA Applications Terminal.
15. Perform appropriate substeps of steps 25 and 26 in Table 6-15 to return system to normal operation.

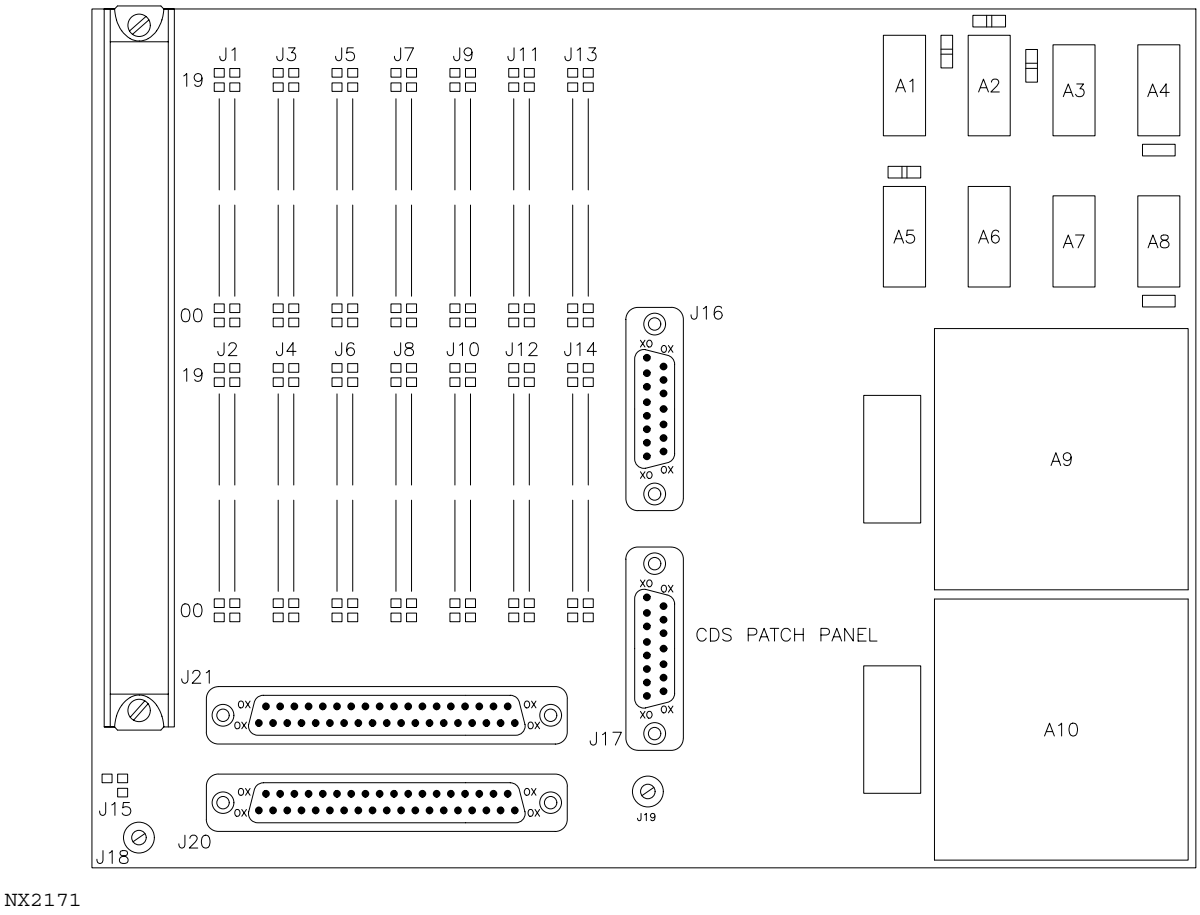


Figure 6-45. CDS Patch Panel

6-5.62 SIGNAL PROCESSOR BLOWER ASSEMBLY UD5A11 REPLACEMENT PROCEDURE.

One technician is required for this procedure.

6-5.62.1 Equipment and Tools Required.

1. Screwdriver set, Phillips-tip
2. Screwdriver set, flat-tip.

6-5.62.2 Initial Conditions/Preliminary Setup.

**WARNING**

Failure to perform applicable shutdown steps in Table 6-13 could cause serious injury or death.

**NOTE**

Refer to paragraph 6-5.2 for special considerations for replacement procedures.

1. Open the right front UD5 cabinet door and locate the A11 assembly.
2. Perform steps 1 through 5 and 21 of Table 6-13 to shut down the Signal Processor.

6-5.62.3 Replacement Procedure.

1. Remove the mounting screws, lock washers, and flat washers from unit using the proper screwdriver.
2. At the front of the cabinet, pull fan assembly out and set it aside.
3. Remove cable restraints using the proper screwdriver.
4. Remove plastic cover from TB1 using the proper screwdriver.
5. Remove external wires from TB1 using the proper screwdriver, labelling each wire when removed.
6. Disconnect ground wire from the chassis of the fan assembly.
7. Remove unit fully and set it aside.
8. Reverse steps 1 through 7 to install new blower unit.
9. At the Secondary Power Distribution Panel, set circuit breakers CB16 and 18 to **ON** to power on Signal Processor.
10. Perform appropriate substeps of steps 25 and 26 of Table 6-15 to return system to normal operation.

6-5.63 A/B SWITCH AND DUAL A/B SWITCHES UD5A17 REPLACEMENT PROCEDURE.

One technician is required for this procedure.

6-5.63.1 Equipment and Tools Required.

1. Screwdriver set, Phillips-tip
2. Screwdriver set, flat-tip
3. Velcro tape.

6-5.63.2 Initial Conditions/Preliminary Setup.

**WARNING**

Failure to perform applicable shutdown steps in Table 6-13 could cause serious injury or death.

1. Open left front UD5 cabinet door.

2. Locate the A/B switch which is located on the left inside wall of the cabinet.
3. Perform steps 1 through 5 and 16, 17, and 20 in Table 6-13. Power down the RDA maintenance terminal by placing the power switch to the OFF position.

6-5.63.3 Replacement Procedure.

**NOTE**

Dual A/B Switches A2, B2, and C2 are on the left side of the switch when facing its back.

1. Tag and disconnect cables from port A, port B and from port C of the A/B switch using the proper screwdriver.
2. Remove the A/B switch from its velcro mounting and set aside.
3. On replacement A/B switch, apply new velcro mounting tape to it.
4. Install replacement A/B switch and secure to velcro mounting tape on cabinet wall.
5. Reconnect cables removed in step 1 to A/B switch.
6. Place the power switch on the RDA terminal to the ON position.
7. Restore power to the RDA by performing steps 8, 15, 16, and 17 of Table 6-15.

6-5.64 CHANNEL SERVICE UNIT (CSU) UD5A18 REPLACEMENT PROCEDURE.

One technician is required for this procedure.

6-5.64.1 Equipment and Tools Required.

1. Screwdriver set, Phillips-tip
2. Screwdriver set, flat-tip.

6-5.64.2 Initial Conditions/Preliminary Setup.

**WARNING**

Failure to perform applicable shutdown step in Table 6-13 could cause serious injury or death.

**NOTE**

Refer to paragraph 6-5.2 for special consideration for replacement procedures.

1. Open the UD5 right front and left rear cabinet doors and locate CSU UD5A18.
2. Perform steps 1 through 5, 16, 17, and 20 in Table 6-13 to shut down the RDA Data Processor and Swingout Power Supply.

6-5.64.3 Replacement Procedure.

1. Remove both cables from the P1 and J1 connectors on the rear of unit using the proper screwdriver.
2. Remove all wires from terminal block TB1 on the rear of the unit using the proper screwdriver.
3. Using proper screwdriver, remove faulty unit from cabinet.
4. Set switch settings on replacement unit as follows:

**NOTE**

The Channel Service Unit (CSU) SW1 settings are site dependent on the type of RDA-to-RPG link used. Commercial T1 links are further dependent on the type of TELCO line encoding used - AMI or B8ZS. Refer to Figure 4-16, sheet 2 and Table 4-16 for the proper setting of SW1.

a. Set DIP switch SW1 to:

| | |
|---|---|
| SW1-1 | * See Figure 4-16, sheet 2 and Table 4-16 |
| SW1-2 | 1 |
| SW1-3 | 1 |
| SW1-4 | * See Figure 4-16, sheet 2 and Table 4-16 |
| SW1-5 | 1 |
| SW1-6 | 1 |
| SW1-7 | 1 |

b. Set NTWK TEST/NORMAL/LOCAL LOOP Switch to the NORMAL position.

c. Set LBO Switch on the back of the unit to:

| IF PRIVATE T1 LINE | | IF TELCO T1 LINE |
|---|---|---|
| dB | LINK DISTANCE | In accordance with |
| 15 | 0 - 500 ft | Telco instructions. |
| 7.5 | 500 - 1750 ft | If Telco instructions |
| 0 | >1750 ft | are unavailable, set it to 0 dB. |

5. Reverse steps 1 through 3 to install unit.
6. Perform steps 8, 15, 16, and 17 of Table 6-15 to restore power to the RDASC processor.

6-5.65 SCSI FAN ASSEMBLY UD5A8 REPLACEMENT PROCEDURE.

One technician is required for this procedure.

6-5.65.1 Equipment and Tools Required.

1. Screwdriver set, flat-tip
2. Screwdriver set, Phillips-tip
3. Wrench set, adjustable
4. Stool
5. ESD Component Handling Kit.

6-5.65.2 Initial Conditions/Preliminary Setup.

**NOTE**

Refer to paragraph 6-5.2 for special considerations for replacement procedures.

1. Open the left front and right rear UD5 cabinet doors and locate the SCSI assembly.
2. Perform steps 1 through 5 and 16 through 20 of Table 6-13 to shut down the RDA Data Processor and Swingout Power Supply.

6-5.65.3 Replacement Procedure.

**ESD** **CAUTION** **ESD**

All WSR-88D printed circuit cards are electrostatic sensitive devices which require special handling. Refer to paragraph 6-5.2.6 .

1. Put ESD wrist strap on and attach clip lead to rear cabinet chassis.
2. Unplug SCSI AC power and fan power (J4 and J9) from the RDADP Cabinet Power Distribution Panel UD5A14 at the bottom of the cabinet.
3. Remove fan power cord cable clamps using the proper screwdriver and collect the power cord in a coil near the SCSI chassis.
4. Remove SCSI assembly power cord cable clamps using the proper screwdriver and collect the power cord in a coil near the SCSI chassis.
5. Remove the nut, lock washers, and flat washer which holds the ground strap to the SCSI assembly using the proper tools.
6. At cabinet front, remove the screws, lock washers and flat washers from the chassis restraints using the proper screwdriver.
7. Remove the chassis to a stool near the unit carefully to avoid damaging the ribbon cable which is still attached.

8. Remove screws and washers using the proper screwdriver, restraining the fan assembly to the support bar, and set assembly aside.

9. Reverse steps 1 through 8 for installation.

10. At the Secondary Power Distribution Panel, place the appropriate RDASC Processor ganged circuit breaker (See Table 6-15, step 8) to the **ON** position.

11. At the RDA Cabinet AC Power Distribution Panel UD5/105A14, place the Main AC circuit breaker CB1 to the **ON** (|) position.

12. At the Swingout Power Supply UD5/105PS5, switch circuit breaker CB1-3 to the **ON** (|) position.

**NOTE**

FAA Redundant - Ensure A/B switch is in the "B" position.
NWS Redundant - Ensure A/B switch is in the "A" (Local) position.

13. At the RDA System Console, if the `CDS>` prompt is not displayed, **simultaneously** press the **<CTRL>** and **<V>** keys twice, then press the **<Return>** key.

14. At the `CDS>` prompt, enter **KEY 1,RDA** and press the **<Return>** key.

15. At the `CDS>` prompt, enter **PO ON<Return>** to power on UD5PS5.

16. At the `CDS>` prompt, enter **CO<Return>** to return to the `*` prompt.

17. At the `*` prompt, enter **RDAUP<Return>**. The loading of the Applications program takes approximately one minute to load.

18. Press the **<Shift>** and **<Port>** keys **simultaneously** to shift to the RDA Applications Terminal.

19. Perform appropriate substeps of steps 25 and 26 in Table 6-15 to return system to normal operation.

6-5.66 SMALL COMPUTER SYSTEM INTERFACE (SCSI) REPLACEMENT.

The WSR-88D SCSI assemblies provide a mass media data storage and retrieval capability. Each SCSI Unit UD5A5 contains an enclosure assembly, A4, with an integral power supply, A5PS1. Each SCSI may contain any or all of the following LRUs:

- A1 - 1/4-inch streaming (cartridge) tape drive
- A2 - Hard (magnetic) disk drive
- SCSI Power Supply

Figure 6-46 identifies the specific SCSI LRU layouts and configurations for the RDA SCSI UD5A5. When a SCSI drive unit becomes faulty, it will be replaced using the following procedures. Tapes

written using high-density tape drives (part number 27-199) cannot be read using low-density tape drives (part number 27-192). If a high density tape drive fails, replace it with a part number 27-199 drive so that backup tapes previously created using the high-density tape drive can be read by the replacement drive.

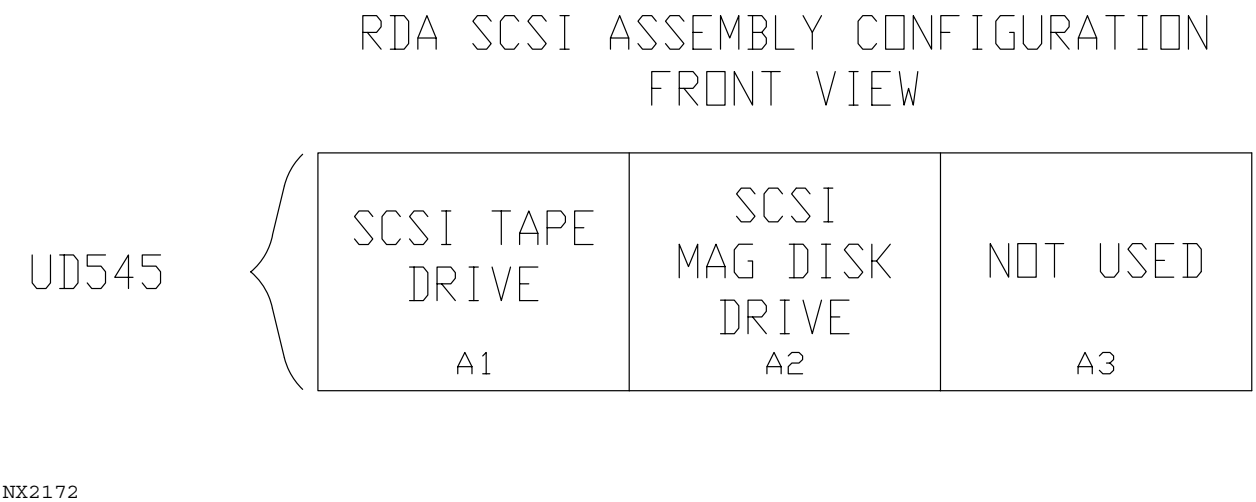


Figure 6-46. RDA SCSI Layout

When a SCSI drive unit becomes faulty, it will be replaced using the following procedures. If the SCSI power supply becomes faulty, the SCSI enclosure must be replaced.

**NOTE**

Refer to paragraph 6-5.2 for special considerations for replacement procedures.

The SCSI devices all require internal jumper setup before installation. Refer to paragraph 6-5.66.1 for the specific jumper setup data.

6-5.66.1 SCSI Device Setup and Strapping. The SCSI drives require strapping setup whenever a unit is replaced. The strapping (jumper) configuration identifies the logical address of the drive and the use of parity error checking. The hard drive must be terminated as it is the last device on the SCSI bus. The tape drive must not have the termination packs installed. Refer to figures listed below to determine the jumper locations and configuration for the SCSI devices.

| Device | Figure Number |
|---|---|
| Tape Drive | Figure 6-47 |
| Hard Disk Drive | Figure 6-48 |

6-5.66.2 SCSI Device Termination. The SCSI bus from the ODC Card to the devices in the SCSI Assembly must be terminated for proper operation. The bus is terminated at the last device on

the SCSI bus, which is the hard disk drive. Depending on the model of magnetic disk drive in use, this could be done with plug-in termination packs or single in-line packages (SIPs) within the hard disk drive (Figure 6-48).

6-5.66.3 SCSI Enclosure Assembly UD5A5A4 Replacement Procedure.

One technician is required for this procedure.

6-5.66.3.1 Equipment and Tools Required.

1. Screwdriver set, Phillips-tip
2. Wrench set, combination
3. Pliers, diagonal cut
4. Tie-wraps
5. ESD Component Handling Kit.

6-5.66.3.2 Initial Conditions/Preliminary Setup.

**NOTE**

Refer to paragraph 6-5.2 . for special considerations for replacement procedures.

1. Open the left front and right rear UD5 cabinet doors and locate the SCSI assembly.
2. Perform steps 1 through 5 and 16 through 20 of Table 6-13 to shut down the RDA Data Processor and Swingout Power Supply.

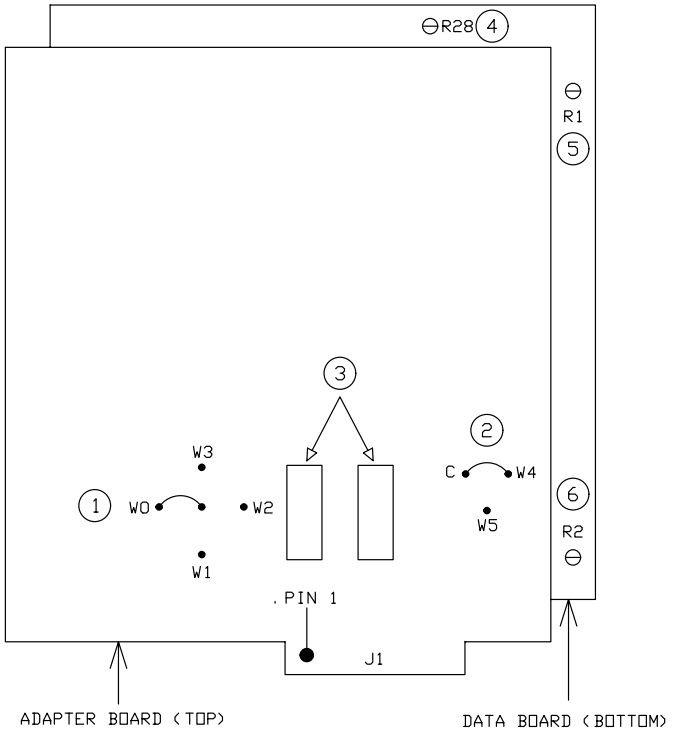


SCSI TAPE DRIVE ADAPTER BOARD - VERSION 1

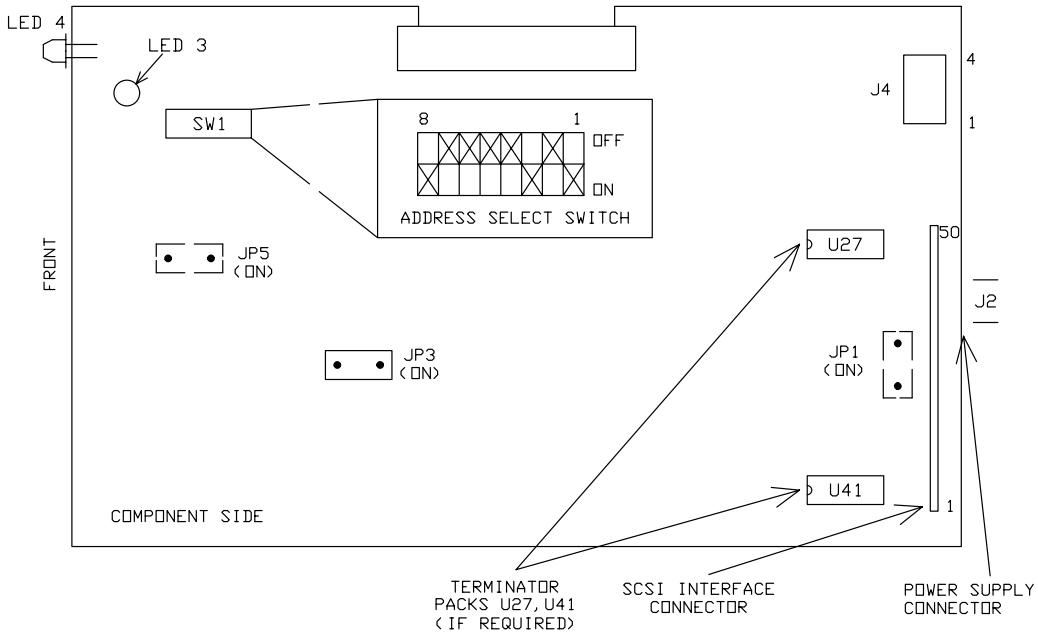


NX2173

SCSI TAPE DRIVE ADAPTER BOARD - VERSION 2

Figure 6-47. SCSI Tape Drive UD5A5A1 Strapping (Sheet 1 of 2)

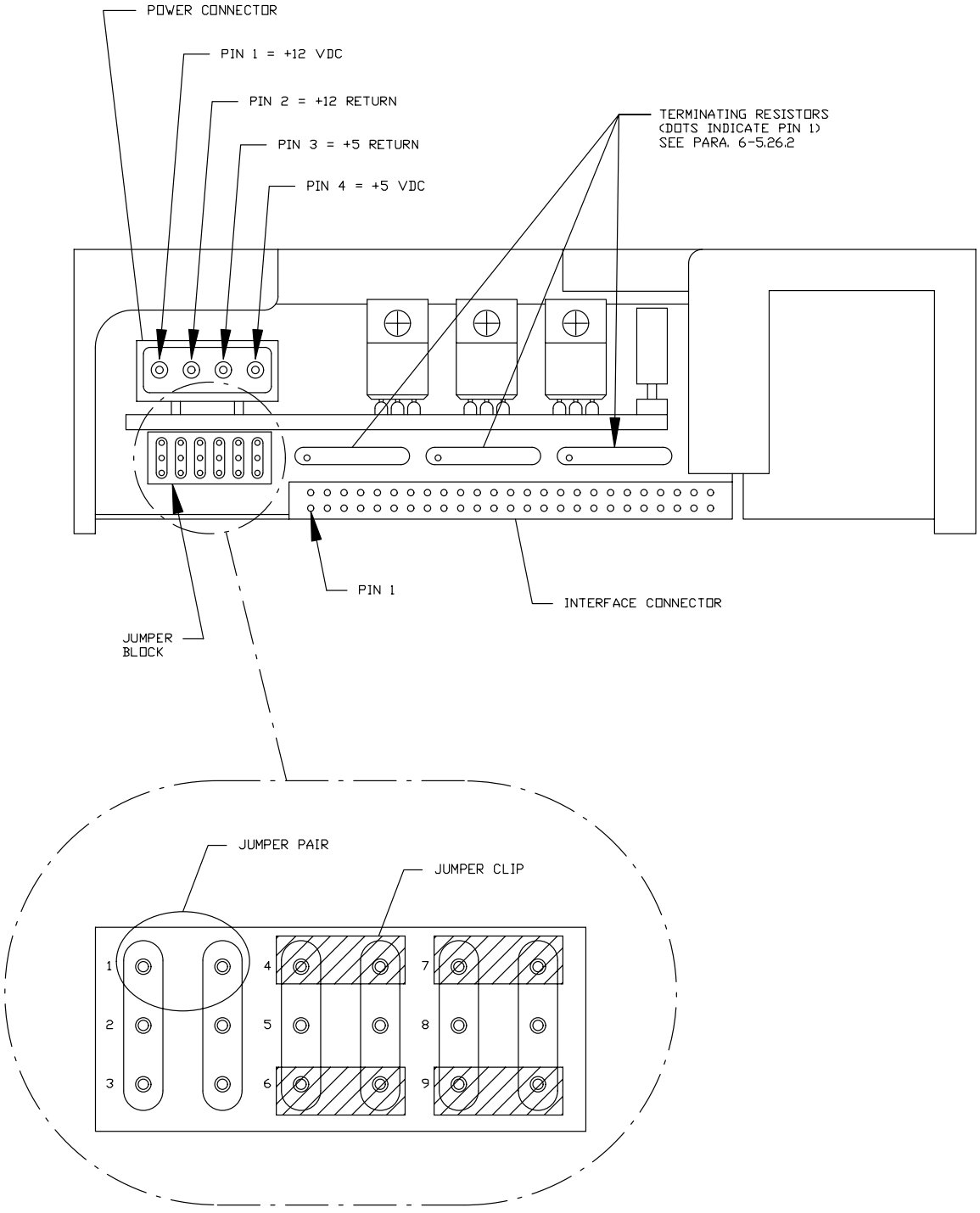


NX2174

Figure 6-47. SCSI Tape Drive UD5A5A1 Strapping (Sheet 2 of 2)

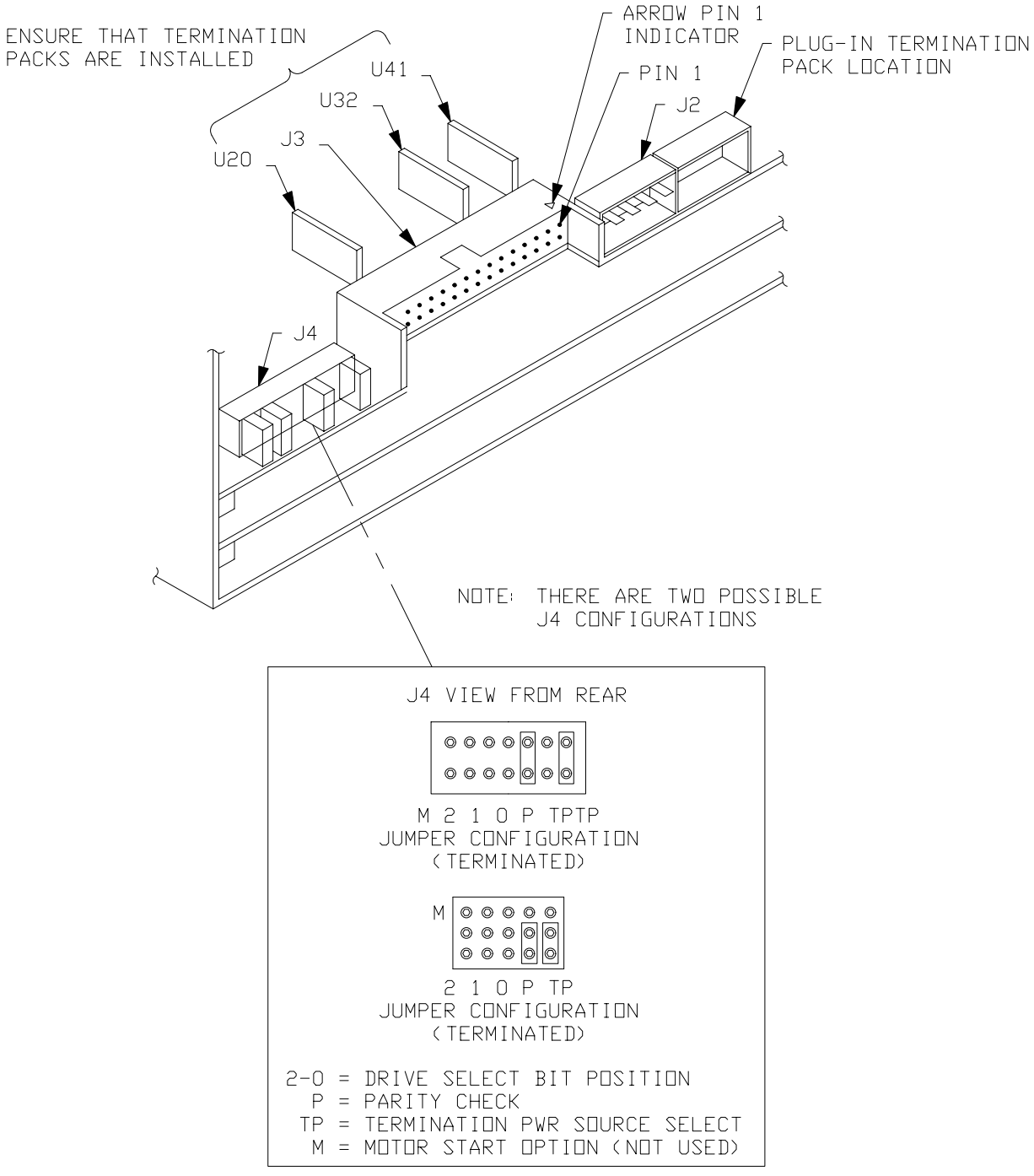


NX2175

Figure 6-48. SCSI Disk Drive UD5A5A2 Strapping (182 MB) (Sheet 1 of 2)

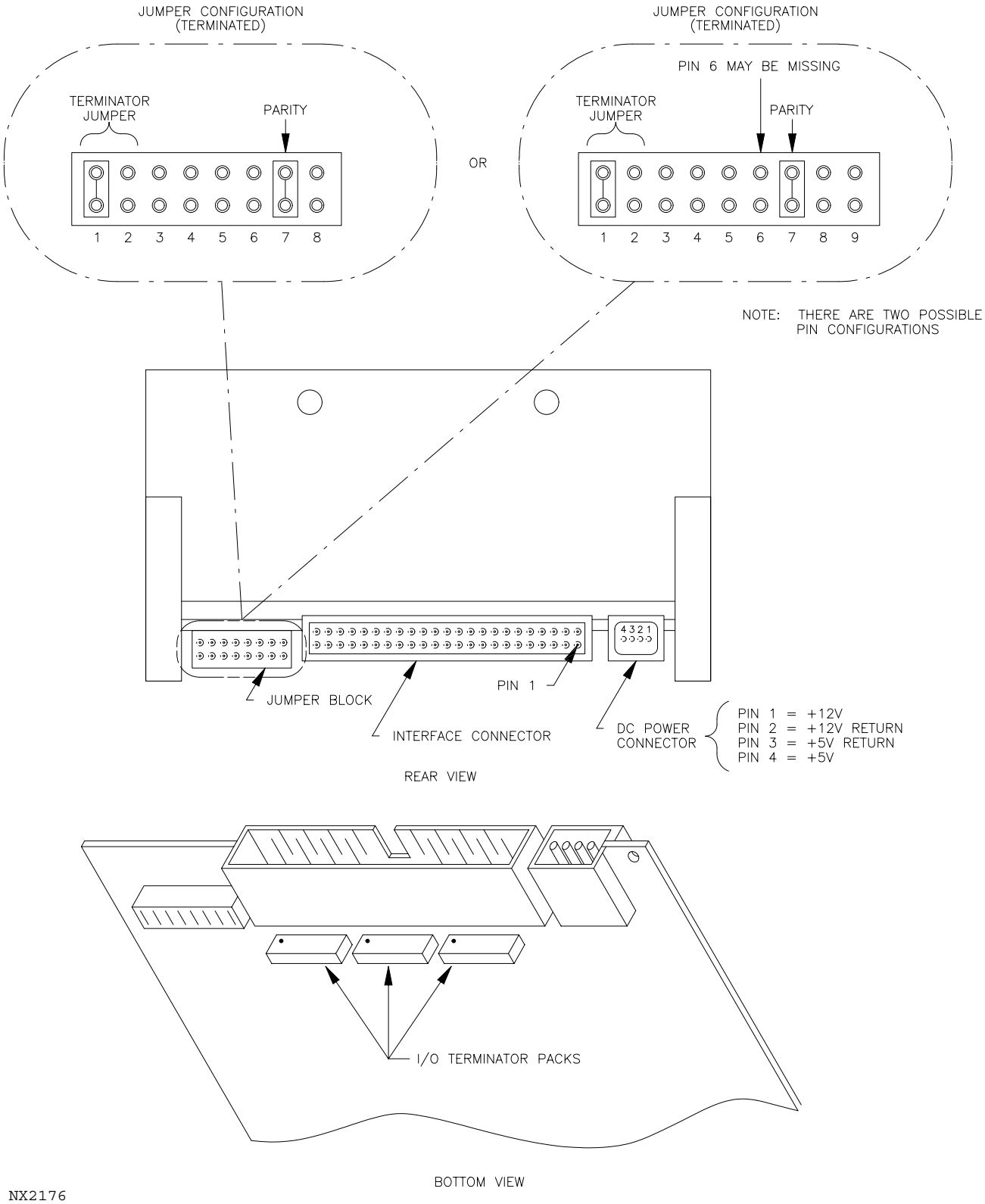


Figure 6-48. SCSI Disk Drive UD5A5A2 Strapping (600 MB) (Sheet 2 of 2)

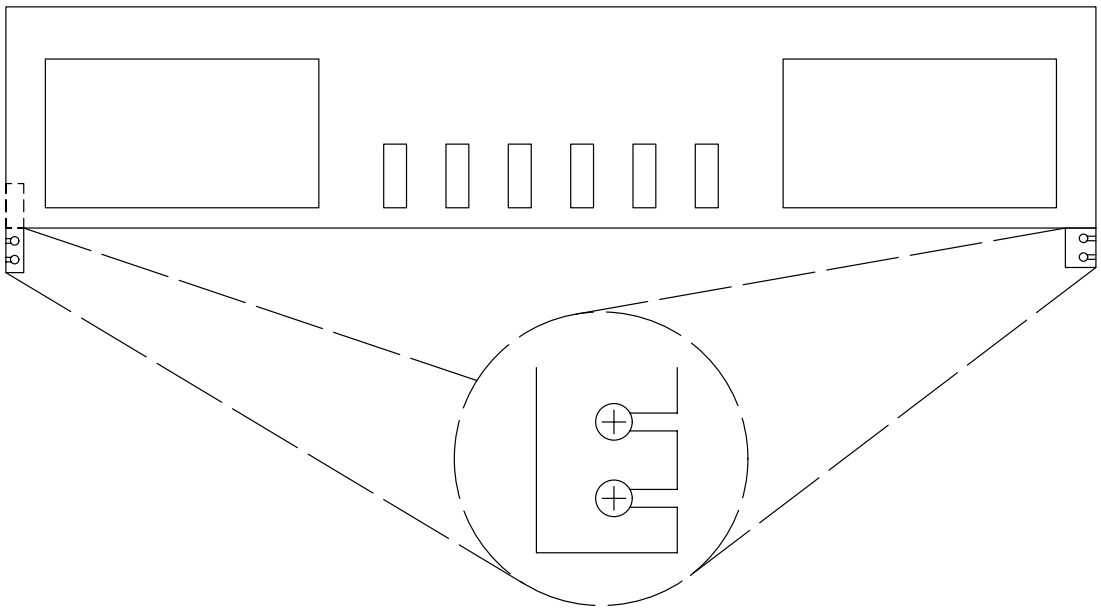

NX2169

Figure 6-49. SCSI Mounting Brackets

6-5.66.3.3 Replacement Procedure.

**ESD** **CAUTION** **ESD**

All WSR-88D printed circuit cards are electrostatic sensitive devices which require special handling. Refer to paragraph 6-5.2.6 .

1. Put ESD wrist strap on and connect clip lead to chassis ground.
2. At SCSI rear, locate power cord and follow it to receptacle. Unplug cord and remove all restraining clamps.
3. Disconnect the ground lead from the SCSI back panel, using the proper tool.
4. Starting at SCSI front, locate the SCSI ribbon cable at M3200 chassis UD5A12.
5. Note ribbon cable polarity (ribbon red stripe to right) and disconnect.
6. Remove SCSI ribbon cable restraining devices and route cable so it will not be damaged during SCSI assembly removal.
7. See Figure 6-49 to determine the method for securing the SCSI to the cabinet. Remove screws using the proper screwdriver.

**CAUTION**

Unit does not have any physical limit stops. To prevent dropping the unit when removing it, grip from sides toward the front.

8. Remove the SCSI enclosure assembly and set it on workbench.
9. Remove all drives and install drives in replacement SCSI enclosure using the applicable drive replacement procedure(s) in paragraph 6-5.66.4 and 6-5.66.5 .
10. Reverse steps 1 through 7 for installation.
11. Perform steps 8, 14, 15, 16, and 17 of Table 6-15 to turn on the system.

6-5.66.4 SCSI Tape Drive UD5A5A1 Replacement Procedure.

One technician is required for this procedure.

6-5.66.4.1 Equipment and Tools Required.

1. Screwdriver set, flat-tip
2. Screwdriver set, Phillips-tip
3. Wrench set, combination
4. Nutdrivers, combination
5. ESD Component Handling Kit
6. Tie-wraps.

6-5.66.4.2 Initial Conditions/Preliminary Setup.

**NOTE**

Refer to paragraph 6-5.2 for special considerations for replacement procedures.

1. Open the left front and right rear UD5 cabinet doors and locate the SCSI assembly.
2. Perform steps 1 through 5 and 16 through 20 of Table 6-13 to shut down the RDA Data Processor and Swingout Power Supply.

6-5.66.4.3 Replacement Procedure.

**ESD** **CAUTION** **ESD**

All WSR-88D printed circuit cards are electrostatic sensitive devices which require special handling. Refer to paragraph 6-5.2.6 .

1. Put ESD wrist strap on and attach clip lead to cabinet chassis.
2. At SCSI rear, locate power cord and follow it to receptacle. Unplug cord and remove all restraining clamps.
3. Disconnect the ground lead from the SCSI back panel using the proper tool.

4. Starting at SCSI front, locate the SCSI ribbon cable at M3200 Chassis UD5A12.
5. Note ribbon cable polarity (ribbon red stripe to right) and disconnect.
6. Remove SCSI ribbon cable restraining devices and route cable so it will not be damaged during SCSI assembly removal.
7. Refer to Figure 6-49 to determine the method for securing the SCSI to the cabinet. Remove screws using the proper screwdriver.

**CAUTION**

Unit does not have any physical limit stops. To prevent dropping the unit when removing it, grip from sides toward the front.

8. Remove the SCSI enclosure assembly and set on workbench.

**ESD** **CAUTION** **ESD**

All WSR-88D printed circuit cards are electrostatic sensitive devices which require special handling. Refer to paragraph 6-5.2.6 .

9. Attach ESD wrist strap clip lead to workbench.
10. Remove the front panel retaining screws using the proper screwdriver or nutdriver.
11. Remove front panel and set it aside.
12. Remove the top cover retaining screws, using the proper screwdriver or nutdriver.
13. Lift off top cover and set it aside.
14. Note tape drive cable polarity and connection point. Record for reconnection.
15. Disconnect connection P2 and ribbon connectors from the tape drive.
16. Remove the tape drive mounting screws from enclosure bottom using the proper screwdriver.
17. Slide the tape drive out of the enclosure and set aside. On the new tape drive, verify strapping using Figure 6-47 and determine the need for terminators, per paragraph 6-5.66.2 .
18. Reverse steps 2 through 17 for installation.
19. Install tie-wraps on cable runs as necessary.
20. Perform steps 8, 14, 15, 16, and 17 of Table 6-15 to turn on the system.

6-5.66.5 SCSI Disk Drive UD5A5A2 Replacement Procedure.

One technician is required for this procedure.

6-5.66.5.1 Equipment and Tools Required.

1. Screwdriver set, flat-tip
2. Screwdriver set, Phillips-tip
3. Wrench set, combination
4. Nutdrivers, combination
5. Pliers, diagonal cut
6. ESD Component Handling Kit
7. Tie-wraps.

6-5.66.5.2 Initial Conditions/Preliminary Setup.

**NOTE**

Refer to paragraph 6-5.2 . for special considerations for replacement procedures.

1. Open the left front and right rear UD5 cabinet doors and locate the SCSI assembly.
2. Perform steps 1 through 5 and 16 through 20 of Table 6-13 to shut down the RDA Data Processor and Swingout Power Supply.

6-5.66.5.3 Replacement Procedure.

**ESD** **CAUTION** **ESD**

All WSR-88D printed circuit cards are electrostatic sensitive devices which require special handling. Refer to paragraph 6-5.2.6 .

1. Put ESD wrist strap on wrist and attach clip lead to cabinet chassis.
2. At SCSI, rear locate power cord and follow it to receptacle. Unplug cord and remove all restraining clamps.
3. Disconnect the ground lead from the SCSI back panel, using the proper tool.
4. Starting at SCSI front, locate the SCSI ribbon cable at M3200 Chassis UD5A12.
5. Note ribbon cable polarity (ribbon red stripe to right) and disconnect.
6. Remove SCSI ribbon cable restraining devices and route cable so that it will not be damaged during SCSI assembly removal.
7. See Figure 6-49 to determine the method for securing the SCSI to the cabinet. Remove the screws using the proper screwdriver.

**CAUTION**

Unit does not have any physical limit stops. To prevent dropping the unit when removing it, grip from sides toward the front.

8. Remove the SCSI enclosure assembly and set on workbench.

**ESD** **CAUTION** **ESD**

All WSR-88D printed circuit cards are electrostatic sensitive devices which require special handling. Refer to paragraph 6-5.2.6 .

9. Put ESD wrist strap on and attach clip lead to workbench.
10. Remove the front panel retaining screws using the proper screwdriver or nutdriver.
11. Remove front panel and set it aside.
12. Remove the top cover retaining screws using the proper screwdriver or nutdriver.
13. Lift off top cover and set it aside.
14. Note cable polarity and connection point. Record for reconnection.
15. Disconnect connection P2 and ribbon connection from the disk drive.
16. Remove the drive mounting screws from enclosure bottom using the proper screwdriver.
17. Slide the disk drive out of the enclosure and set aside. On new disk drive, verify strapping and ensure the I/O terminator packs are in place. See Figure 6-48.
18. Reverse steps 2 through 17 for installation.
19. Install tie-wraps on cable runs as necessary.
20. Perform steps 8, 14, 15, 16, and 17 of Table 6-15 to turn on power. Reload software (refer to paragraph 4-3.4 for procedure).

6-5.66.6 SCSI Power Supply UD5A5PS1 Replacement

6-5.66.6.1 Equipment and Tools Required.

1. Screwdriver set, flat-tip
2. Screwdriver set, Phillips-tip
3. Wrench set, combination
4. Pliers, diagonal cut
5. Nutdrivers, combination

6. ESD Component Handling Kit
7. Tie-wraps

6-5.66.6.2 Initial Conditions/Preliminary Setup.

**NOTE**

Read paragraph 6-5.2 for special considerations for replacement procedures.

1. Open the left front and right rear UD5 cabinet doors and locate the SCSI assembly.
2. Perform steps 1 through 5 and 16 through 20 of Table 6-13 to shut down the RDA Data Processor and Swingout Power Supply.

6-5.66.6.3 Replacement Procedure.

**ESD** **CAUTION** **ESD**

All WSR-88D printed circuit cards are electrostatic sensitive devices which require special handling. Refer to paragraph 6-5.2.6 .

1. Put ESD wrist strap on and attach clip lead to cabinet chassis.
2. At SCSI rear, locate power cord and follow it to receptacle. Unplug cord and remove all restraining clamps.
3. Disconnect the ground lead from rear of SCSI unit using proper tool.
4. Starting at SCSI front, locate the SCSI ribbon cable at M3200 Chassis UD5A12.
5. Note ribbon cable polarity (ribbon red strip to top) and disconnect ribbon cable.
6. Remove SCSI ribbon cable restraining devices and route cable so it will not be damaged during SCSI assembly removal.
7. See Figure 6-49 to determine location of four screws. Remove four retaining screws using the proper screwdriver.

**CAUTION**

Unit does not have any physical limit stops. To prevent dropping the unit when removing it, grip unit from sides toward the front.

8. Remove the SCSI enclosure assembly and set it on workbench.

**ESD** **CAUTION** **ESD**

All WSR-88D printed circuit cards are electrostatic sensitive devices which require special handling. Refer to paragraph 6-5.2.6 .

9. Attach ESD wrist strap clip lead to workbench.
10. Remove top cover retaining screws using the proper screwdriver or nutdriver.
11. Lift off top cover and set aside.
12. Tag and disconnect power cable connectors to all devices (Hard Drive, 1/4″ Streaming Tape).
13. Locate input power terminal strip, record location and color of the three leads, and remove screws with flat-tip screwdriver.
14. Locate four screws securing power supply to chassis. Remove screws with appropriate nutdriver.
15. Remove defective power supply and install new power supply by reattaching all removed hardware and reconnecting removed cables. Replace top cover removed in steps 10 and 11.
16. Reverse steps 2 through 7 to install SCSI assembly in rack.
17. Install tie-wraps on cable runs as necessary.
18. Perform steps 8, 14, 15, 16, and 17 of Table 6-15 to turn on the system.

6-5.67 RDADP CABINET POWER DISTRIBUTION PANEL UD5A14 REPLACEMENT PROCEDURE.

One technician is required for this procedure.

6-5.67.1 Equipment and Tools Required.

1. Screwdriver set, flat-tip
2. Screwdriver set, Phillips-tip
3. Pliers, diagonal cut
4. Tie-wraps.

6-5.67.2 Initial Conditions/Preliminary Setup.

**WARNING**

Failure to perform applicable shutdown steps in Table 6-13 could cause serious injury or death.

**NOTE**

Refer to paragraph 6-5.2 for special considerations for replacement procedures.

1. Open both rear UD5 cabinet doors and locate the power distribution panel at the bottom of the rear left cabinet.

2. Perform steps 1 through 5 and 16 through 20 of Table 6-13 to shut down the RDA Data Processor and Swingout Power Supply.

6-5.67.3 Replacement Procedure.

1. Remove AC power cords from J1 through J6 (label for installation).

2. Remove fan power cord from J8 (label for installation).

3. Locate the power cord which is located at terminal board (TB1) and the ground wire is located on cabinet chassis (TB5) which are both located on the inner roof of the RDA cabinet. Using a flat-tip screwdriver, unscrew and disconnect wires of power cord from TB1.

4. Remove all restraining clamps and tie-wraps that gang the power cord to other cords within the chassis. Pull power cord out from RDA cabinet so that it hangs freely from power distribution panel.

5. Unscrew ground wire connected to cabinet chassis (TB5) using proper screwdriver.

6. Remove the power distribution panel mounting screws using the proper screwdriver.

7. Pull defective unit out and set it aside.

8. To install replacement unit, reverse steps 1 through 7.

9. Perform steps 8, 14, 15, 16, and 17 of Table 6-15 to turn on RDADP.

6-5.68 RDA MAINTENANCE TERMINAL UD5A4 (CDT-100) REPLACEMENT PROCEDURE.

One technician is required for this procedure.

6-5.68.1 Equipment and Tools Required.

1. Screwdriver set, flat-tip

2. Screwdriver set, Phillips-tip.

6-5.68.2 Initial Conditions/Preliminary Setup.

**NOTES**

Refer to paragraph 6-5.2 for special considerations for replacement procedures.

Users of the RDA/RPG Remote Access Terminal (RRRAT) UD5A32/33/34 (Single-thread sites) or UD5/105A38/33/39 (NWS

Redundant sites) Compac computers, refer to the RRRAT User's Guide for remove and replacement procedures and configuration of new terminal.

1. Open the left front and right rear UD5 cabinet doors and locate RDA maintenance terminal.
2. Perform steps 1 through 5, 16 through 20, and 23 of Table 6-13.

6-5.68.3 Replacement Procedure.

1. Ensure power switch at right side of terminal is set to the OFF position.
2. Remove screws on mounting hardware at terminal base.
3. Slide mounting hardware away from terminal base.
4. Disconnect AC power cord at rear of terminal.
5. Disconnect keyboard connector at left side of terminal.
6. Make a note of cable locations and disconnect RS-232 cables from ports at rear of terminal.
7. Remove terminal from RDADP cabinet and set aside.
8. Install replacement terminal in RDADP cabinet.
9. Connect RS-232 cables removed in step 6 at rear of terminal.
10. Connect keyboard connector at left side of terminal base.
11. Connect AC power cord at rear of terminal.
12. Position terminal and slide mounting hardware onto terminal base.
13. Replace screws on mounting hardware to secure terminal.
14. Place power switch at right side of terminal base to the ON position.
15. Perform procedure of paragraph 6-5.68.4 to configure terminal (CDT-100 users only).
16. Perform steps 8, 14, 15, 16, 17, 25, and 26 of Table 6-15 to turn system on.

6-5.68.4 Terminal Setup Configuration Procedure.

**NOTE**

The operation of the terminal is controlled by the configuration options selected in the setup configuration mode. The RDA maintenance terminal must be configured to function as a system

console on the system port (PORT A) and as an applications terminal on the auxiliary port (PORT B). The configuration parameters listed in Table 4-1 should be checked or set prior to doing a startup procedure after installation or replacement of the terminal.

1. Press the **<Shift>** and **<Reset>** keys simultaneously to enter setup configuration and display Main Setup Menu. See Figure 6-50. If the Main Setup Menu does not appear, perform step 2, otherwise skip to step 3.

**NOTE**

The Main Setup menu contains all available options for the configuration of the terminal. Check or set the parameters according to those listed in Figure 6-50 and Table 4-1.

2. If pressing the **<Shift>** and **<Setup/Reset>** keys simultaneously does not result in the display of the Main Setup Menu, the terminal may not be setup to emulate a 6312. Press the **<F3>** key and then press the **<F20>** key to display the Main Setup Menu. If the Main Setup Menu is not displayed on the screen, press the **<Ctrl>** and **<F3>** keys simultaneously and then press the **<F20>** key.

3. **<Tab>** cursor to parameter fields and enter data in the following manner:

   a. Press **<Spacebar>** until desired parameter is displayed in other fields.

   b. For special function characters in the terminator parameters field, refer to Table 6-21.

Table 6-21. Special Function Characters

| Special Function Character | Press <Ctrl> key and |
|---|---|
| $E_X$ | C |
| $C_N$ | X |
| $G_S$ | ] |
| $C_R$ | M |
| $L_F$ | J |
| $E_C$ | [ |
| $D_3$ | S |
| $D_1$ | Q |

**NOTE**

Parameters may be entered on category configuration menus instead of Main Setup Menu. For information about these menus, refer to the COTS manual, Guide to Installing and Using the CDT-100, Chapter 10.

Use function key <F6> to exit these menus and display Main Setup Menu. All parameter entries are saved when the <F6> key is pressed.

4. Press the **<Setup/Reset>** key. `SAVE ALL? (Y/N)` is displayed on the lower right area of the screen. To save configuration and exit setup configuration, press the **Y** key.

5. Press the **<Shift>** and **<Port>** keys to shift to other port.

6. Press the **<Shift>** and **<Setup/Reset>** keys to enter setup configuration.

7. Repeat steps 1 through 4 for the configuration of the applications terminal port.

**NOTE**

When steps 1 through 4 are accomplished, the system can be restarted by using procedures in paragraph 6-5.3.2 . Additional information on configuration can be found in paragraph 4-1.4.6 .

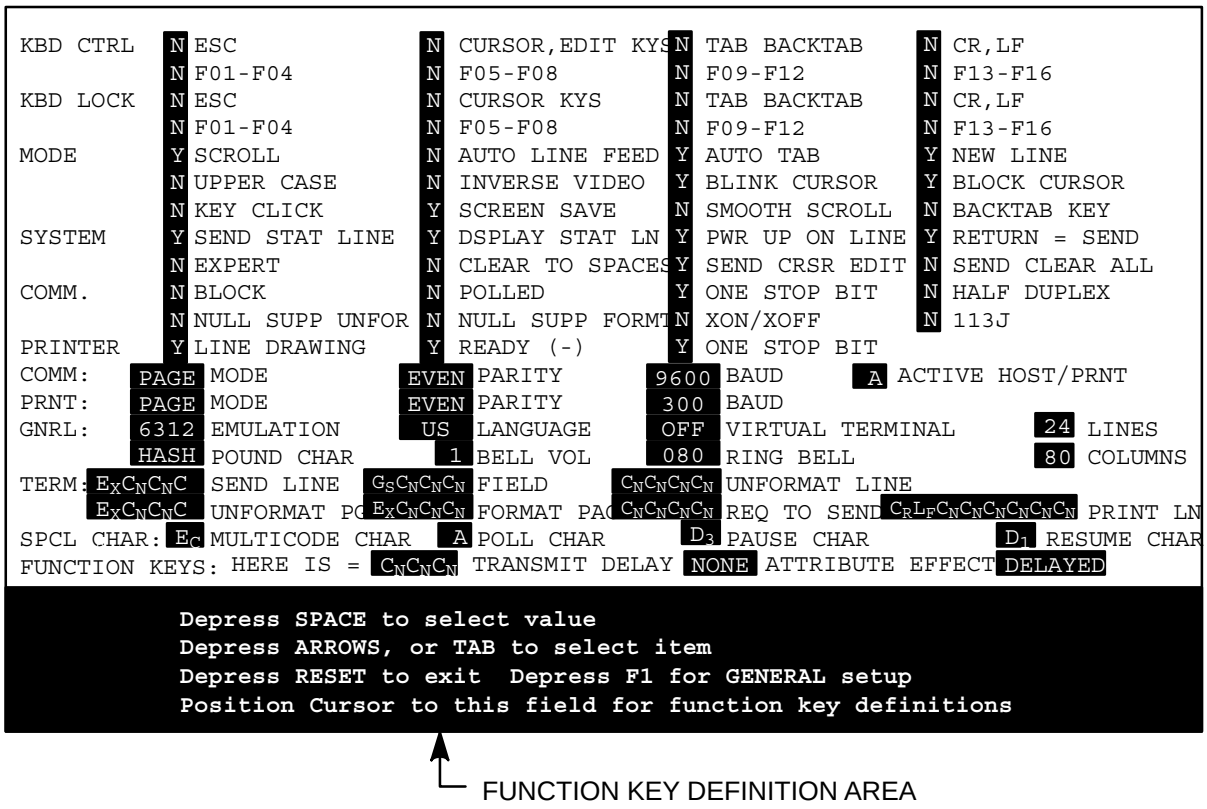


Figure 6-50. Main Setup Menu

6-5.69 PEDESTAL SLIP RING BRUSH BLOCK ASSEMBLY UD2A1A2A1, A2, AND A3 REPLACEMENT PROCEDURE.

This procedure describes the steps to replace the slip ring brush block assemblies. The alignment and adjustment of the brush block assemblies are also included in the procedure. One technician is required for this procedure.

6-5.69.1 Equipment and Tools Required.

1. Screwdriver set, flat-tip
2. Screwdriver set, Phillips-tip
3. Flashlight
4. Wrench, adjustable
5. Gage, Dynamometer (0-200 grams).

6-5.69.2 Initial Conditions/Preliminary Setup.

**WARNING**

Failure to perform applicable shutdown steps in paragraph 6-6.15.3 could cause serious injury or death from antenna radiation or antenna movement.

1. Perform steps 1, 2, 3, 5, and 6 of paragraph 6-6.15.3 to shut down antenna/pedestal.

**WARNING**

Failure to place the pedestal PWR ON/SAFE Safety Interlock Switch to the SAFE position could cause serious injury or death.

2. At the azimuth housing, ensure the PWR ON/SAFE Safety Interlock Switch is set to the SAFE position.

**WARNING**

Failure to move azimuth and elevation stow pins from OPERATE to STOW could cause serious injury or death.

3. Ensure that the azimuth and elevation stow pins are in STOW.

6-5.69.3 Replacement Procedure.

**NOTE**

You will be entering a confined space, non-permit required. This means the confined space does not contain any atmospheric hazards capable of causing death or serious physical harm.

1. Open azimuth housing access door (LPP) or remove access cover plate (FSP).
2. Remove screws on slip ring access panel to gain access to slip ring brush block assemblies.
3. Tag leads on brush block assembly that are to be replaced.
4. Remove leads from brush block assembly.
5. Remove brush block bracket screws and remove brush block assembly.
6. Remove debris caused by wear by using a HEPA vacuum cleaner and brush prior to attempting to install a new block assembly. If all blocks are being replaced, they should be all removed together. The unit should then be vacuumed.

**CAUTION**

Do not force the brush block in. Contacts are sensitive to shear. Contacts forced against the outer edge of the ring assemblies will break off, rendering the blocks unusable.

7. Place new brush block very gently in the slip ring assembly. Contacts must slide freely between the rings.

8. After brush block is placed in the slip ring assembly, slide the brush block in the location of the contacts until the brush leafs are in the straight (working) position and secure bracket with screws.

**NOTE**

The straight or working position of the leafs is sensitive to tolerance buildup. It is possible that the top leaf of any block may be completely straight while the bottom leaf is not. The block should be adjusted to a position where all leafs are as close to the straight condition as possible. See Figure 6-51 for acceptable conditions.

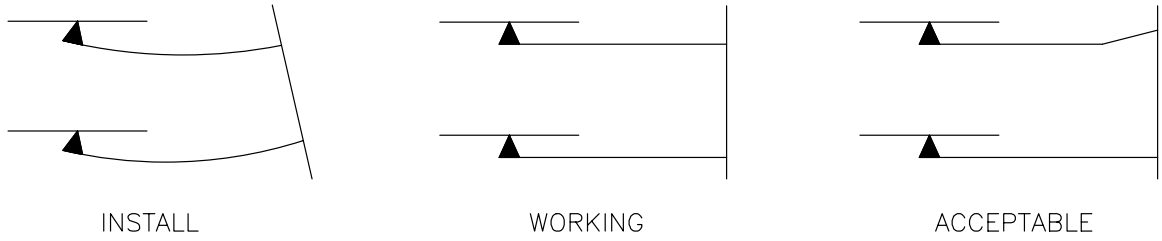


NX2177

Figure 6-51. Initial Brush Block Installation/Alignment

9. Using the dynamometer gage, spot check the pressure. Ensure that it is between 42 to 98 grams by placing the tip of the gage arm under the leaf next to the contacts.

10. Lift the gage gently until the contact is lifted off the ring, approximately 0.010 to 0.015 inches, and take the reading.

11. If reading is outside limits specified in step 9, readjust block assembly and repeat step 10.

12. Once the block(s) have been installed, a visual check of leaf position is required. It is important that brush leafs do not rub on adjacent board assemblies. This could cause improper wear and/or short circuit. See Figure 6-52.

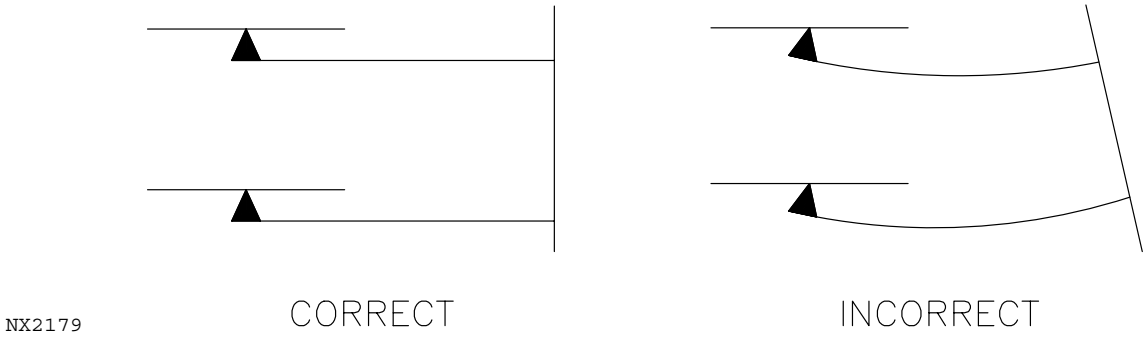


Figure 6-52. Final Brush Block Alignment

13. Reconnect leads on brush block assembly previously removed in step 4.
14. Once leads have been connected, the slip ring should be checked for continuity. In addition, adjacent circuits (1 and 3, 22 and 24 etc.) should be checked for no continuity.
15. Replace slip ring access cover panel and fasten with screws.
16. Remove all tools from azimuth housing area.
17. Close azimuth housing door or install access cover plate.
18. Perform steps 1 through 15 of paragraph 6-6.16.3 to turn on antenna/pedestal.

6-5.70 BI-DIRECTIONAL CROSSGUIDE COUPLER UD1DC1 REPLACEMENT PROCEDURE.

6-5.70.1 Equipment and Tools Required.

1. Adjustable wrench, 6-inch
2. Wrench set, hex key
3. Ladder, 6-foot.

6-5.70.2 Initial Conditions/Preliminary Setup.

**WARNING**

Failure to perform applicable shutdown steps in Table 6-13 could cause serious injury or death.

1. Perform steps 1 through 5 and 7 through 12 of Table 6-13.
2. Refer to IPB NWS EHB 6-501, Figure 2 for the crossguide coupler location.

6-5.70.3 Replacement Procedure.

1. Disconnect cable W57 from UD1DC1J2.

2. Disconnect cable W61 and UD1AT4 from UD1DC1J1.
3. Disconnect WG pressurization hoses from UD1DC1 connection.
4. Remove mounting screws, washers, and nuts securing the crossguide coupler to the waveguide assembly.
5. Remove defective assembly and set aside.
6. Mount the replacement UD1DC1 assembly using proper tools.
7. Ensure all screws are tight.
8. Connect WG pressurization hoses to the UD1DC1 hose connection.
9. Connect cable W61 and UD1AT4 to UD1DC1J1.
10. Connect cable W57 to UD1DC1J2.
11. Perform steps 2 through 5, 10, 11, and 22 of Table 6-15.
12. Check the pressure gauge on the Bi-directional Coupler UD1DC1/DC101 after 30 minutes. The pressure gauge should read approximately 3 PSI.
13. At applications terminal command line, enter **OPER<Return>** to bring up transmitter.
14. The following two Transmitter Adaptation parameters are associated with Bi-directional Coupler.

| Parameter | Path Loss | Description | Typical Value (dB) |
|---|---|---|---|
| TR22 | PL_BICOUPLERA | 1DC1 XMTR COUPLER STRAIGHT THROUGH | -0.05 |
| TR23 | PL_BICOUPLERB | 1DC1 XMTR COUPLER COUPLING | -35.2 |

Upon replacement of the Bi-directional Couplers TR22 or TR23, verify the replacement couplers data and update TR22 or TR23 if necessary per paragraph 6-6.29 .

6-5.71 SPECTRUM FILTER UD1WG6/WG106* REPLACEMENT PROCEDURE.

Two technicians are required for this procedure.

- - - - -

* Redundant

6-5.71.1 Equipment and Tools Required.

1. Adjustable wrench, 6-inch
2. Wrench set, hex key
3. Ladder, 6-foot.

6-5.71.2 Initial Conditions/Preliminary Setup.

**WARNING**

Failure to perform applicable shutdown steps in Table 6-13 could cause serious injury or death.

1. Perform steps 1 through 5 and 7 through 12 of Table 6-13.
2. Refer to IPB NWS EHB 6-501, Figure 2 for the spectrum filter location.

6-5.71.3 Replacement Procedure.

**NOTE**

The waveguide components connected to the left side of the Spectrum Filter are different between Single Channel/Redundant Channel 1 sites and Redundant Channel 2 sites. Perform the applicable step below depending on which Spectrum filter is being replaced.

1. For **Single Channel** or **Redundant Channel 1** sites, perform the following step:
   a. Remove the hex-head bolts on the left side (output) of Spectrum Filter UD1WG6/WG106 that secures Spectrum Filter to Bi-directional Coupler UD1DC1/DC101.
2. For **Redundant Channel 2** sites, perform the following step:
   a. Remove the hex-head bolts on the left side (output) of Spectrum Filter UD1WG6 that secures Spectrum Filter to UD1WG18 (90° curved elbow waveguide section).
3. Remove the hex-head bolts on the right side (input) of Spectrum Filter that secures Spectrum Filter to RF Circulator UD1WG4/WG104.
4. On the backside of the Spectrum Filter, disconnect the waveguide pressurization hose.

**NOTE**

The following steps require two technicians to support the Spectrum Filter and other waveguide plumbing during the removal

and installation of the Spectrum Filter Assembly to prevent equipment damage.

5. At the bracket above the Spectrum Filter, remove the two bolts that secure the Spectrum Filter with the proper wrench. The second technician should support the Spectrum Filter.
6. Carefully remove the Spectrum Filter from between the waveguide plumbing.
7. Carefully install the new Spectrum Filter between the open waveguide plumbing while the other technician installs the bracket bolts removed in step 5. Do not tighten bolts at this time.
8. Align RF Circulator port to Spectrum Filter on right side and install hex-head bolts. Do not fully tighten bolts.
9. Align WG18 or DC1/DC101 to Spectrum Filter on left side and install hex-head bolts. Do not fully tighten bolts.
10. Tighten all waveguide hex-head bolts and support bracket bolts.
11. Reconnect the waveguide pressurization hose at rear of Spectrum Filter.
12. Perform steps 2 though 5, 10, 11, and 22 of Table 6-15 to restore system.
13. Check the pressure gauge on the Bi-directional Coupler UD1DC1/DC101 after 30 minutes. The pressure gauge should read approximately 3 PSI.
14. At the Applications Terminal command line, enter **OPER<Return>** to bring up transmitter.

6-5.72 VME CHASSIS UD5A1A4 REPLACEMENT PROCEDURE.

Two technicians are required for this procedure.

6-5.72.1 Equipment and Tools Required.

1. Screwdriver set, Phillips-tip
2. Screwdriver set, flat-tip
3. ESD wrist strap with clip lead.

6-5.72.2 Initial Conditions/Preliminary Setup.

**WARNING**

Failure to perform applicable shutdown steps in Table 6-13 could cause serious injury or death.

1. Open the left front and right rear UD5 Cabinet doors and locate VME Chassis UD5A1.

2. Perform steps 1 through 5, 16 and 17 of Table 6-13 to shut down RDA Data Processor and Swingout Power Supply.

3. Set power switch on VME chassis to OFF (0 position).

6-5.72.3 Replacement Procedure.

**ESD** **CAUTION** **ESD**

All WSR-88D printed circuit boards are electrostatic sensitive devices which require special handling. Refer to paragraph 6-5.2.6 .

**NOTE**

FAA Redundant sites have one additional cable connection for the Remote Monitoring Subsystem (RMS).

1. Remove AC power cable and three data cables from rear of chassis.

2. Remove VCI interface cable from J1 on front of chassis from VCI-V card.

3. Put ESD wrist strap on and attach clip to cabinet chassis ground.

4. Note the location of all boards prior to removal. Remove all wideband and VCI-V boards.

5. Remove two mounting screws on each side of front of chassis (total of 4 screws) while supporting chassis from bottom. Remove chassis.

6. Make note of the chassis backplane strapping and re-strap new chassis the same.

7. Reverse steps 1 through 5 for installation. Boards must be installed in original positions.

8. Perform steps 8, 15, 16, and 17 of Table 6-15 to restore power to RDA Data Processor.

9. Set power switch on VME chassis to ON (|) position and close cabinet door.

6-5.73 VME WIDEBAND BOARD UD5A1A2/A3* REPLACEMENT PROCEDURE.

One technician is required for this procedure.

6-5.73.1 Equipment and Tools Required.

1. Screwdriver set, flat-tip

2. ESD Component Handling Kit.

- - - - -

* A3 board is site dependent.

6-5.73.2 Initial Conditions/Preliminary Setup.

**ESD** **CAUTION** **ESD**

All WSR-88D printed circuit cards are electrostatic sensitive devices which require special handling. Refer to paragraph 6-5.2.6 .

1. Open left front UD5 cabinet door and locate VME Chassis UD5A1.
2. Set power switch on VME chassis to OFF (0 position).

6-5.73.3 Replacement Procedure.

1. Put ESD wrist strap on and attach clip to chassis ground.
2. Loosen captive flat-tip screws from left and right ends of unit.
3. Remove faulty circuit card by pushing circuit card tabs away from center of board and pulling card away from chassis. Place faulty circuit card in ESD bag.
4. Check/set switches/straps on the replacement card according to the applicable figures and tables specified in Figure 6-53.
5. Push new unit into chassis. Push tabs towards center of board and in until unit is mounted securely.
6. Tighten captive flat-tip screws.
7. Restore power to VME chassis by setting power switch to ON (|) position.

6-5.74 VME VCI-V BOARD UD5A1A1 REPLACEMENT PROCEDURE.

One technician is required for this procedure.

6-5.74.1 Equipment and Tools Required.

1. Screwdriver set, flat-tip
2. ESD Component Handling Kit.

6-5.74.2 Initial Conditions/Preliminary Setup.

**ESD** **CAUTION** **ESD**

All WSR-88D printed circuit cards are electrostatic sensitive devices which require special handling.

1. Open left front UD5 cabinet door and locate VME Chassis UD5A1.
2. Set power switch on VME chassis to OFF (0 position).

6-5.74.3 Replacement Procedure.

1. Put ESD wrist strap on and attach clip to chassis ground.
2. Loosen captive flat-tip screws from left and right ends of unit.
3. Remove cable from connector on front of board.
4. Remove faulty circuit card by pushing circuit card tabs away from center of board and pulling card away from chassis. Place faulty circuit card in ESD bag.
5. Check/set switches SW1, SW2, SW3 and straps H1, H2, and H3 on the replacement card according to Figure 6-54.
6. Push new unit into chassis. Push tabs towards center of board and in until unit is mounted securely.
7. Tighten captive flat-tip screws.
8. Restore power to VME chassis by setting switch to ON (|) position.

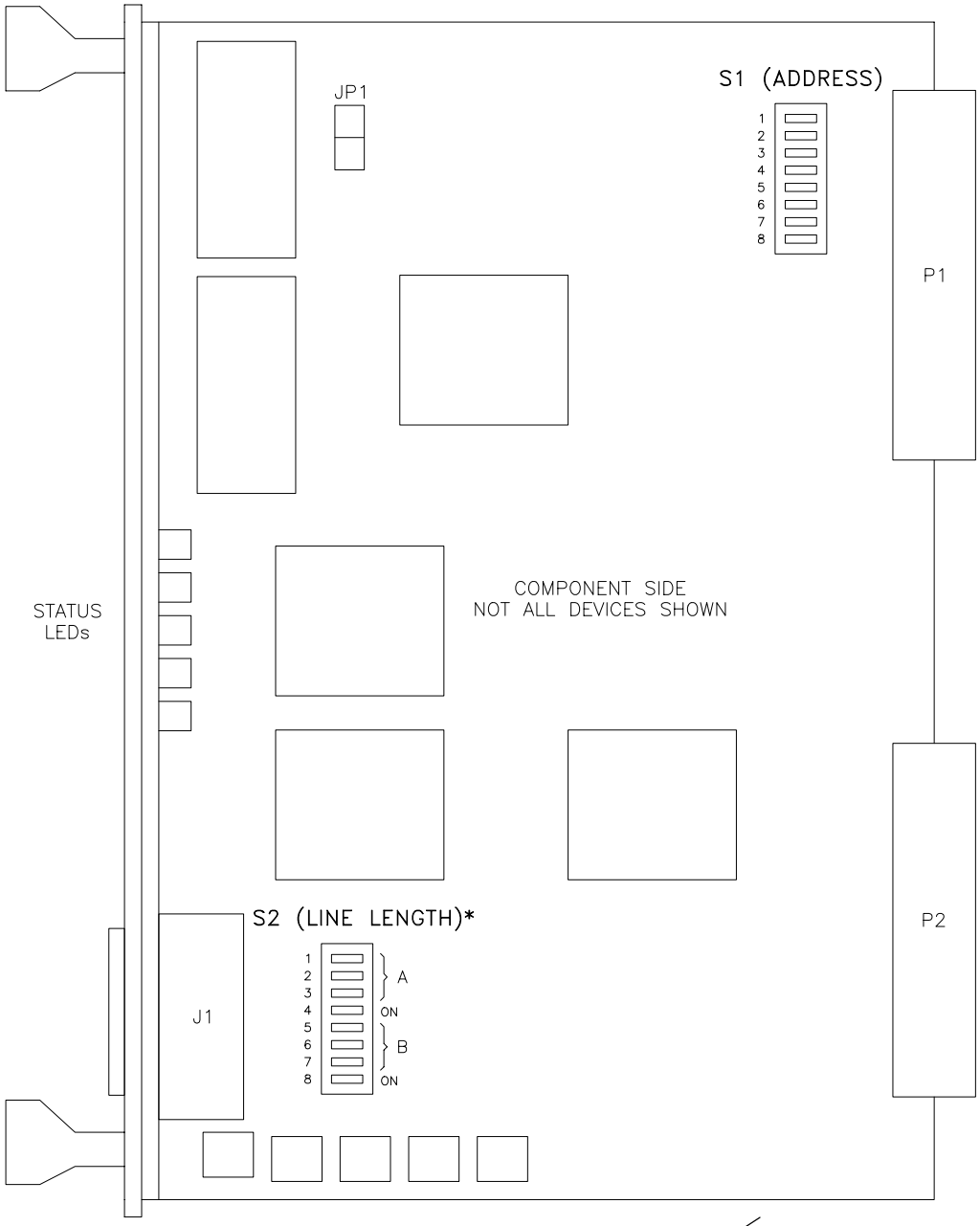


S1

| ADDRESS | 1 | 2 | 3 | 4 | 5 | 6 | 7 | 8 |
|---|---|---|---|---|---|---|---|---|
| UD5A1A2 | OFF | OFF | ON | ON | ON | OFF | OFF | ON |
| UD5A1A3 | OFF | OFF | ON | OFF | ON | OFF | OFF | ON |

S2

| LINE LENGTH | 1 | 2 | 3 | 4 | 5 | 6 | 7 | 8 |
|---|---|---|---|---|---|---|---|---|
| 0–133 FT | ON | OFF | OFF | ON | ON | OFF | OFF | ON |
| 133–266 FT | OFF | ON | ON | ON | OFF | ON | ON | ON |
| 266–399 FT | OFF | ON | OFF | ON | OFF | ON | OFF | ON |
| 399–533 FT | OFF | OFF | ON | ON | OFF | OFF | ON | ON |
| 533–655 FT | OFF | OFF | OFF | ON | OFF | OFF | OFF | ON |

Figure 6–53 VME Wideband Board UD5A1A2/A3 Strapping

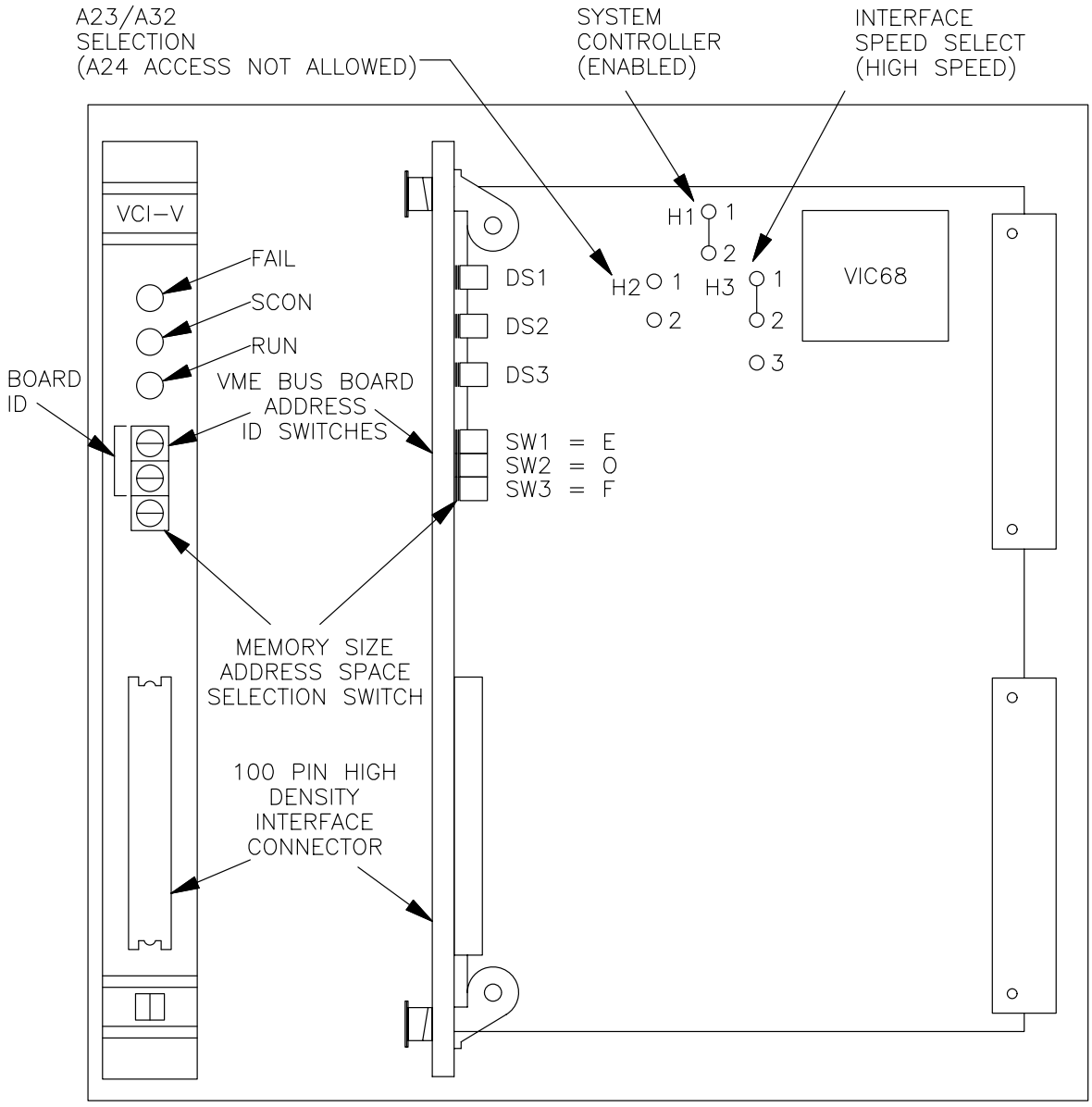


Figure 6-54. VCI-V Board UD5A1A1 Strapping

6-5.75 VME CHASSIS POWER SUPPLY UD5A1PS1 REPLACEMENT PROCEDURE.

Two technicians are required for this procedure.

6-5.75.1 Equipment and Tools Required.

1. Screwdriver set, Phillips-tip
2. Screwdriver set, flat-tip
3. ESD wrist strap with clip lead.

6-5.75.2 Initial Conditions/Preliminary Setup.

**WARNING**

Failure to perform applicable shutdown steps in Table 6-13 could cause serious injury or death.

1. Open the left front and right rear UD5 cabinet doors and locate VME Chassis UD5A1.
2. Perform steps 1 through 5, 16 and 17 of Table 6-13.
3. Set power switch on VME Chassis to OFF (0 position).

6-5.75.3 Replacement Procedure.

**ESD** **CAUTION** **ESD**

All WSR-88D printed circuit boards are electrostatic sensitive devices which require special handling.

1. Remove AC power cable and three data cables from rear of chassis.
2. Remove the VCI interface cable from the J1 on front of chassis from VCI-V card.
3. Remove the two mounting screws on each side of front of chassis while supporting chassis from bottom. Remove chassis and set on workbench.
4. Loosen four captive fasteners from the left side rear of the VME chassis using a flat-tip screwdriver. Hold the power supply assembly in place.
5. Slide power supply unit out about half-way to gain access to 3 connectors located in the front of the power supply.
6. Disconnect the 3 cable connectors from the front of the power supply and 1 cable connector from the rear of the power supply.
7. Slide the power supply assembly completely out of chassis. Use caution to ensure that the soldered wires in the AC input connector are not strained (do not remove the soldered wires).

8. Turn the power supply assembly upside down and remove screws that hold the power supply in the assembly.

9. Reverse steps 1 through 8 to install new unit and return to original setup.

10. Set power switch on VME Chassis to ON (|) position.

11. Perform steps 8, 15, 16, and 17 of Table 6-15 to restore the system.

6-5.76 AC FAN TRAY ASSEMBLY UD5A13 OR FANS UD5A13A1B1 THRU B4 REPLACEMENT PROCEDURE.

Two technicians are required for this procedure.

6-5.76.1 Equipment and Tools Required.

1. Screwdriver set, Phillips-tip
2. Screwdriver set, flat-tip
3. Wire cutters.

6-5.76.2 Initial Conditions/Preliminary Setup.

**WARNING**

Failure to perform applicable shutdown steps in Table 6-13 could cause serious injury or death.

1. Perform steps 1 through 5, 16, 17, and 20 of Table 6-13 to power down the RDA Data Processor and Swingout Power Supply.
2. Open the right front UD5 cabinet door and locate the fan assembly below the M3200 Processor chassis.

6-5.76.3 Replacement Procedure.

1. Disconnect the power cable from connector J6 and the ribbon cable from connector J5, located on the front panel of the fan assembly.
2. Loosen the two captive screws holding the fan assembly tray in place and remove the tray completely from its chassis by sliding the tray forward and out.
3. Disconnect the power connector from the faulty fan.
4. Using wire cutters, cut tie-wraps that gang the sensing-connector cable of faulty fan to other cables.
5. Locate and disconnect plug of sensing-connector cable from respective jack (J1, J2, J3, or J4) on circuit card at lower left corner of fan assembly tray.

6. Remove two screws securing the fan to the fan tray using the proper screwdriver.
7. Remove the faulty fan from the fan tray and set aside.
8. Place replacement fan into the fan tray, align the mounting holes in the fan with the fan tray and secure with the 2 screws removed in step 6.
9. Reconnect the sensing and power connectors to the new fan.
10. Connect plug of new fan's sensing-connector cable to respective jack on circuit card at lower left corner of fan assembly tray.
11. Gang sensing-connector cable to other cables using new tie-wraps.
12. Slide fan tray back into cabinet and ensure it is properly seated and tighten the two captive screws to secure the fan tray to the cabinet.
13. Reconnect ribbon cable to connector J5 and power cable to connector J6, located on the front panel of the fan assembly.
14. At the Secondary Power Distribution Panel, place the appropriate RDASC Processor ganged circuit breaker (See Table 6-15, step 8) to the **ON** position.
15. At the Swingout Power Supply UD5/105PS5, switch circuit breaker CB1-3 to the **ON** (|) position.

**NOTE**

FAA Redundant - Ensure A/B switch is in the "B" position.
NWS Redundant - Ensure A/B switch is in the "A" (Local) position.

16. At the RDA System Console, if the `CDS>` prompt is not displayed, **simultaneously** press the **<CTRL>** and **<V>** keys twice, then press the **<Return>** key.
17. At the `CDS>` prompt, enter **KEY 1,RDA** and press the **<Return>** key.
18. At the `CDS>` prompt, enter **PO ON<Return>** to power on UD5PS5.
19. At the `CDS>` prompt, enter **STA 1,28<Return>** to check the status of UD5PS5. The Output Power Status Menu will be displayed.
20. Verify that all the fans are operational on the Output Power Status Menu.
21. At the `CDS>` prompt, enter **CO<Return>** to return to the `*` prompt.
22. At the `*` prompt, enter **RDAUP<Return>**. The loading of the applications program takes approximately one minute.
23. Press the **<Shift>** and **<Port>** keys **simultaneously** to shift to the RDA Applications Terminal.
24. Perform appropriate substeps of steps 25 and 26 in Table 6-15 to return system to normal operation.

6-5.77 AC FAN TRAY SENSOR BOARD UD5A13A1A1 REPLACEMENT PROCEDURE.

One technician is required for this procedure.

6-5.77.1 Equipment and Tools Required.

1. Screwdriver set, Phillips-tip
2. Screwdriver set, flat-tip

6-5.77.2 Initial Conditions/Preliminary Setup.

1. Perform steps 1 through 5, 16, 17, and 20 of Table 6-13 to power down the RDASC Data Processor and Swingout Power Supply.
2. Open the right front UD5 cabinet door and locate the fan assembly located below the M3200 Processor chassis.

6-5.77.3 Replacement Procedure.

1. Disconnect the power cable from connector J6 and the ribbon cable from connector J5, located on the front panel of the fan assembly.
2. Loosen the two captive screws holding the fan assembly tray in place and remove the tray completely from its chassis by sliding the tray forward and out.
3. Locate the Fan Sensor Board at the front left of the fan tray.
4. Tag and remove the four connectors from J4, J2, J1, and J3.
5. Remove the four Phillips-head screws securing the board to the fan tray.
6. Slide the board backwards until it clears the opening in the fence rail.
7. On replacement board, ensure the strapping is from the center pin to the pin labeled BOTTOM. See Figure 6-55.
8. Slide the new board through the opening in the fence rail. Ensure the connector locking tabs are squeezed together so it will fit through the front panel opening.
9. Install the four Phillips-head screws to secure the board to the fan tray.
10. Install the four connector plugs to J4, J2, J1, and J3.
11. Slide the fan tray back into cabinet and ensure it is properly seated. Tighten the two captive screws.
12. Reconnect the ribbon cable to connector J5 and the power connector to J6.
13. At the Secondary Power Distribution Panel, place the appropriate RDASC Processor ganged circuit breaker (See Table 6-15, step 8) to the **ON** position.
14. At the Swingout Power Supply UD5/105PS5, switch circuit breaker CB1-3 to the **ON** (|) position.

**NOTE**

FAA Redundant - Ensure A/B switch is in the “B” position.
NWS Redundant - Ensure A/B switch is in the “A” (Local) position.

15. At the RDA system console, if the CDS> prompt is not displayed, **simultaneously** press the **<CTRL>** and **<V>** keys twice, then press the **<Return>** key.
16. At the CDS> prompt, enter **KEY 1,RDA** and press the **<Return>** key.
17. At the CDS> prompt, enter **PO ON<Return>** to power on UD5PS5.
18. At the CDS> prompt, enter **STA 1,28<Return>** to check the status of UD5PS5. The Output Power Status Menu will be displayed.
19. Verify that all the fans are operational on the Output Power Status Menu.
20. At the CDS> prompt, enter **CO<Return>** to return to the * prompt.
21. At the * prompt, enter **RDAUP<Return>**. The loading of the applications program takes approximately one minute.
22. Press the **<Shift>** and **<Port>** keys **simultaneously** to shift to the RDA Applications Terminal.
23. Perform appropriate substeps of steps 25 and 26 in Table 6-15 to return system to normal operation.

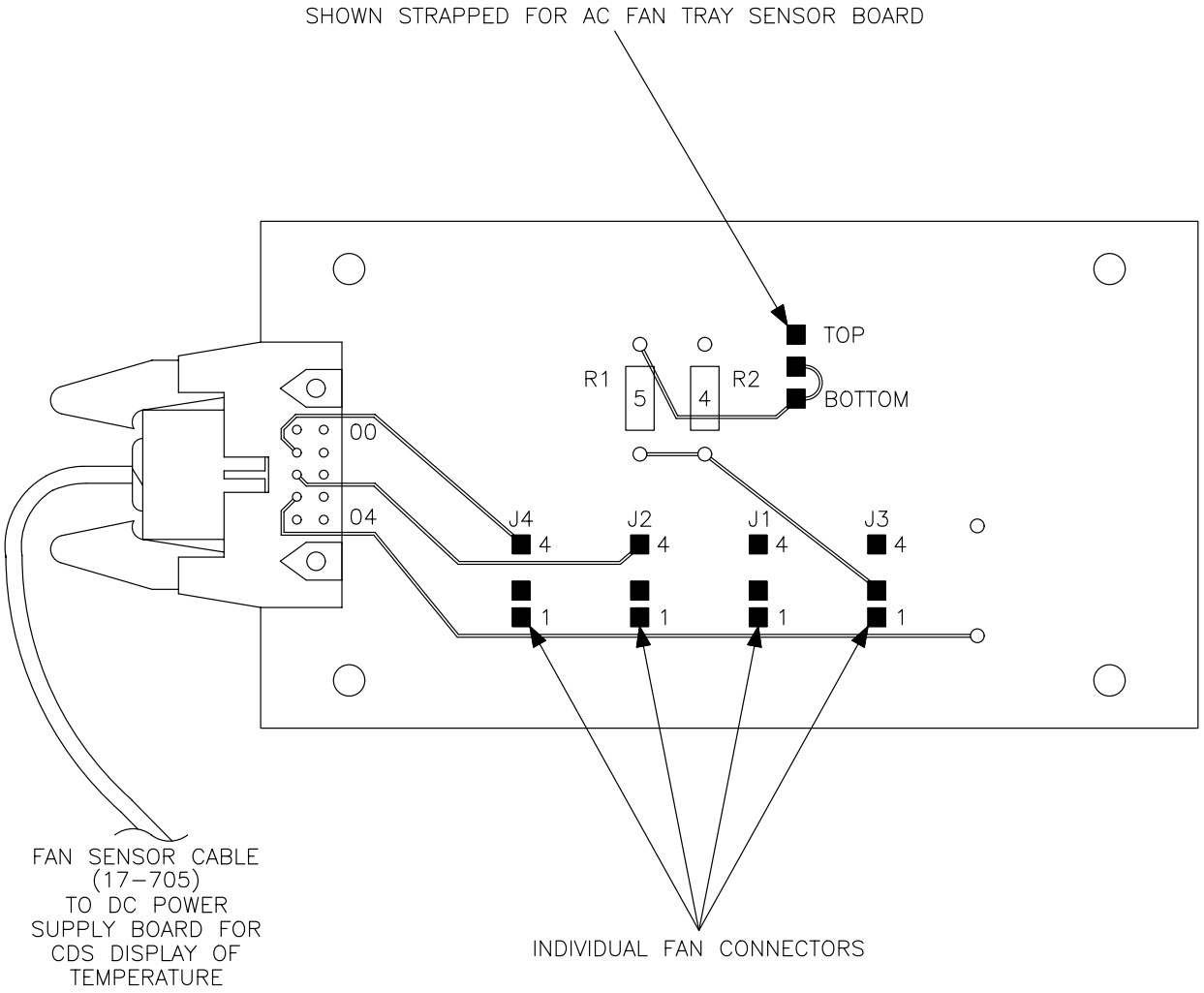


*NOTE: FOR UD5A13 FAN TRAY SENSOR BOARD, CENTER PIN IS ONLY STRAPPED TO BOTTOM PIN.

NX2182

Figure 6-55. AC Fan Tray Sensor Board UD5A13A1A1 Strapping

6-5.78 STATMUX UD105A20 REPLACEMENT PROCEDURE.

One technician is required for this procedure.

6-5.78.1 Equipment and Tools Required.

Screwdriver set, Phillips-tip

6-5.78.2 Initial Conditions/Preliminary Setup.

**NOTE**

STATMUX UD105A20 setup procedure must be performed at the Remote RDA Maintenance Terminal UD32.

1. Perform STATMUX UD105A20 setup procedure in paragraph 6-6.34 .

**WARNING**

Failure to perform applicable shutdown steps in Table 6-13 could cause serious injury or death.

**NOTE**

Refer to paragraph 6-5.2 for special considerations for replacement procedures.

2. Perform steps 1, 2, 5, and 16 of Table 6-13 to shut down RDASC Processor.

6-5.78.3 Replacement Procedure. (Refer to Table 4-18 and see Figure 4-18 for locations).

1. Open right rear door of cabinet UD105.
2. Set the ON/OFF switch to OFF at rear of STATMUX chassis.
3. Unplug power cord from the rear of the STATMUX.
4. Remove the following cables from the rear of the STATMUX.

   105W689 P1 from TRUNK1
   105W686 P2 from PORT2
   105W685 P2 from PORT1
   105W687 P1 from PORT3
   105W688 P1 from PORT4

5. Open front left UD105 cabinet door and locate chassis. Locate four screws on bottom of chassis that hold chassis to cabinet bracket.
6. Using a Phillips head screwdriver, unscrew four screws on bottom of chassis.

7. Grasp chassis from both the top and the bottom and slide it out of the cabinet so that the chassis and grey cover come out together.
8. Hold chassis from the bottom and bring it over to a workbench.
9. Turn chassis over and reinsert four screws removed in step 6 to reattach chassis to its grey cover.
10. Remove four Phillips screws from the replacement unit and install the unit on the shelf using the four screws.
11. Reconnect the five cables previously removed.
12. Plug in the AC Power Cord into the rear of the STATMUX.
13. Set the ON/OFF switch to ON at rear of STATMUX chassis.
14. Perform step 17 of Table 6-15 to turn on RDASC Processor.

6-5.79 DIAL MODEM (STANDALONE) UD105A21 REPLACEMENT PROCEDURE.

One technician is required for this procedure.

6-5.79.1 Equipment and Tools Required.

1. Screwdriver set, Phillips-tip
2. Screwdriver set, flat-tip

6-5.79.2 Initial Conditions/Preliminary Setup.

1. Open front left UD105 cabinet door and locate assemblies UD105A20 and UD105A21 (STATMUX and Dial Modem).
2. Shut off power to the STATMUX UD105A20 by placing its power ON/OFF switch, located on its back panel, to the OFF position.

6-5.79.3 Replacement Procedure. (Refer to Table 4-19 and see Figure 4-19).

1. Unscrew one screw on each side of two brackets that hold modem.
2. Open right rear UD105 cabinet door and set 0/1 power switch on the back of the Dial Modem to 0.
3. Unplug power cord.
4. Unscrew two flat-head screws securing (DTE connector) cable 105W689P2 to modem and unplug cable.
5. Unplug phone jack cable 105W690P1 from DIAL LINE slot.
6. Remove the modem from holding brackets.

7. Ensure that all six DIP switches on the back of the new modem are in the OFF (up) position.
8. Install new modem into holding brackets and tighten bracket screws.
9. Connect the DTE cable to the back of the modem using the proper screwdriver.
10. Connect the phone plug to the DIAL LINE jack.
11. Connect the AC power cable to the rear of the modem.
12. Apply power to the modem by pressing the 0/1 switch on the back of the modem.
13. Apply power to the STATMUX UD105A20 by placing its power ON/OFF switch to the ON position.
14. Perform the Standalone Dial Modem (Codex 3261) Setup procedure in paragraph 6-6.35 .

6-5.80 RELAY ASSEMBLY UD5/105A24 REPLACEMENT PROCEDURE.

One technician is required for this procedure.

6-5.80.1 Equipment and Tools Required.

Screwdriver set, Phillips-tip

6-5.80.2 Initial Conditions/Preliminary Setup.

1. Perform steps 1 through 5, 16, 17, and 20 in Table 6-13 to shutdown the RDASC processor.
2. Open left rear cabinet door to the RDA cabinet and locate Relay Assembly A24 on the left cabinet wall below the CDS Patch Panel A15.

6-5.80.3 Replacement Procedure.

1. Relay Assembly A24 has a terminal board TB1; the right side of which is connected to the lugs of cable 5/105W708 and the lugs of the J31 power strip. Unscrew these lugs.
2. Unscrew the five screws which connect the relay assembly to the cabinet rail.
3. Replace the assembly and reconnect the cable lugs.
4. Perform steps 8, 15, 16, and 17 in Table 6-15 to return system to normal operations.

6-5.81 AUTOMATIC WIDEBAND COMMUNICATION SWITCH UD5A19 REPLACEMENT PROCEDURE.

One technician is required for this procedure.

6-5.81.1 Equipment and Tools Required.

1. Screwdriver set, Phillips-tip
2. Screwdriver set, flat-tip

6-5.81.2 Initial Conditions/Preliminary Setup.

**WARNING**

Failure to perform applicable shutdown steps in Table 6-13 could cause serious injury or death.

1. Open left front UD5 cabinet door.
2. Locate the Automatic Wideband switch which is located on the left inside wall of the cabinet.
3. Perform steps 1, 2, and 5 in Table 6-13. Power down the RDA maintenance terminal by placing the power switch to the OFF position.

6-5.81.3 Replacement Procedure.

1. Tag and disconnect cables from port A, port B, port COM, and port CONTROL/STATUS.
2. Remove the Automatic Wideband switch from its velcro mounting and set aside.
3. Obtain a replacement Automatic Wideband switch and apply velcro mounting tape to it.
4. Install replacement Automatic Wideband switch and secure to velcro mounting tape on cabinet wall.
5. Reconnect cables removed in step 1 to Automatic Wideband switch.
6. Place the power switch on the RDA Maintenance Terminal to the ON position.
7. At the RDA System Console, enter **RDAUP<Return>**.
8. **Simultaneously** press the **<Shift>** and **<Port>** keys to access Applications Terminal.
9. At the Applications Terminal command line, enter **OPER<Return>**.
10. Perform appropriate substeps of steps 25 and 26 of Table 6-15 to restore normal operation.

Table 6-22. RDA Group Circuit Breaker Identification

| Equipment/Location | CB/Switch | Function |
|---|---|---|
| Transmitter Power Distribution Panel UD3/103A13 | CABINET LIGHTS CB3 | Circuit breaker controls power from the Secondary Power Distribution Panel UD7A3/A29* CB1, 3, and 5 to the transmitter cabinet lights |
| | HV POWER CB1 | Controls power from the Secondary Distribution Panel UD7A3/A29* CB1, 3, and 5 to the transmitter cabinet blower assemblies, the 280 Volt Power Supply UD3A2 and the Focus Coil Power Supply UD3PS2 |
| | AUX POWER CB2 | Controls power from the Secondary Power Distribution Panel UD7A3/A29* CB1, 3, and 5 to the transmitter cabinet power supplies PS1, 3, 4, 5, 6, 7, and 8 |
| Waveguide Pressurization Unit UD6/106 | POWER CB1 | Controls AC power from the Secondary Power Distribution Panel UD7A3/A29* (FAA) CB8 or UD7A30* (NWS) CB8/CB10 to the Waveguide Pressurization Unit |
| Swing Out Power Subsystem UD5/105PS5 | AC Power Main Module Circuit Breakers CB1-3 (ganged) | Controls AC Power Distribution for the RDASC Processor |
| RDA Cabinet Power Distribution Panel UD5A14 | POWER ON/OFF switch CB1 | Controls AC power from the Secondary Power Distribution Panel UD7A3/A29* (FAA) CB15, 17, and 19 or UD7A30* (NWS) CB9, 11, and 13/CB15, 17, and 19 to the Power Distribution Panel UD5A14 |
| RDA Main Power Distribution Panel UD7A2 | AIR CONDITIONER #1 CB2, 4, and 6 (Ganged) | Provides power for Air Conditioner #1 |

- - - - -
* Redundant

Table 6-22. RDA Group Circuit Breaker Identification (continued)

| Equipment/Location | CB/Switch | Function |
|---|---|---|
| RDA Main Power Distribution Panel UD7A2 | AIR CONDITIONER #2 CB12, 14 and 16 (Ganged) | Provides power for Air Conditioner #2 |
| | RADOME HEATER #1 CB7, 9, and 11 (Ganged) RADOME HEATER #2 CB27, 29, and 31 (Ganged) RADOME HEATER #3 CB33, 35, and 37 (Ganged) | Provides power for radome heaters #1, #2, and #3 |
| | INTERIOR AND EXTERIOR LIGHTS CB18 | Provides power for interior and exterior lights |
| | SECURITY ALARM PANEL & AUX RELAY BOX CB41 | Provides power to security alarm and relay box |
| | CONVENIENCE OUTLET RECEPTACLES CB8 and 10 | Provides power for shelter receptacles. Single channel sites with TPS, 7A2CB10 moved to Secondary PDP 7A3CB10. NWS Redundant sites with TPS, 7A2CB10 moved to CEC-DP 7TPS2CB14. |
| | FIRE DETECTION SUBSYSTEM PANEL CB20 | Provides power to the Fire Detection Panel. Single channel sites with TPS, 7A2CB20 moved to Secondary PDP 7A3CB13. NWS Redundant sites with TPS, 7A2CB20 moved to CEC-DP 7TPS2CB17. |
| | RDA SECONDARY POWER DISTRIBUTION PANEL #1 or TPMS SHELTER POWER DISTRIBUTION SYSTEM PANEL CB38, 40, and 42 (Ganged) | Provides power to the RDA Secondary Power Distribution Panel #1 or provides power to TPMS Shelter Power Distribution Panel |
| | RDA SECONDARY POWER DISTRIBUTION PANEL #2 CB32, 34, and 36 (Ganged) | Provides power to the RDA Secondary Power Distribution Panel #2. (Spared if TPS is installed) |

- - - - -
* Redundant

Table 6-22. RDA Group Circuit Breaker Identification (continued)

| Equipment/Location | CB/Switch | Function |
|---|---|---|
| | RDA SECONDARY POWER DISTRIBUTION PANEL #3 CB21, 23, and 25 (Ganged) (NWS Redundant Systems only) | Provides power for RDA Secondary Power Distribution Panel #3 for NWS Redundant Systems only. (Spared if TPS is installed) |
| | TELCO CB25 | Provides power to convenience outlet for telephone equipment. Sites with a TPS system, 7A2CB25 should have been moved to Secondary PDP 7A3CB14 or CEC-DP 7TPS2CB14 (NWS Redundant sites). |
| RDA Main Power Distribution Panel UD7A2 | TRANSMITTER VENTILATION SYSTEM #1 and #2 CB22 and CB24 | Provides power for the Channel 1 transmitter UD103 ventilation system #1 and for the Channel 2 transmitter UD3 ventilation system #2 |
| | SHUNT TRIP CB30 | Provides power for Shunt Trip circuit (Relay K4) in Fire Detection Panel. |
| | RADOME INTERIOR LIGHTS AND RECEPTACLE CB13 | Provides power for radome interior lights and receptacle |
| | RADOME VENT CB17 | Provides power for radome vent |
| | AIRCRAFT WARNING LIGHTS CB19 (site optional) | Provides power to aircraft warning lights |
| | TOWER STAIR LIGHTS CB15 | Provides power for tower stair lights |
| | SNOW SHELTER PANEL CB1, 3, and 5 (Ganged) | Provides power to NWS Snow Shelter Power Panel |
| | CONTACTOR COIL CB26 | Provides power to contactor coil #1 for FAA redundant systems. (Spared at NWS and DoD sites with TPS.) |

- - - - -
* Redundant

Table 6-22. RDA Group Circuit Breaker Identification (continued)

| Equipment/Location | CB/Switch | Function |
|---|---|---|
| | CONTACTOR COIL CB28 (FAA redundant systems only) | Provides power to contactor coil #2 for FAA redundant systems only |
| RDA Secondary Power Distribution Panel UD7A3 (DoD and NWS non-redundant systems) | TRANSMITTER CB1, 3, and 5 (Ganged) | Provides power to the transmitter |
| | PEDESTAL MOTOR POWER CB2, 4, and 6 (Ganged) | Provides power to pedestal motors |
| | TRANSMITTER UTILITY POWER CB7 | Provides power to the utility outlet |
| | W/G COMPRESSOR /DEHYDRATOR CB8 | Provides power to the wave-guide pressurization unit |
| | RBDDS CB9 | Provides power to the Remote Base Data Distribution System (Selected DoD sites have RBDDS, but CB installed at all DoD sites) |
| | RECEPTACLE CB10 | Provides uninterruptible power from the TPS unit (Sites with a TPS) |
| | FIRE DETECTION PANEL CB13 | Provides power to Fire Detection system (Sites with a TPS) |
| | TELEPHONE CB14 | Provides uninterruptible power to convenience outlet for Sprint telephone equipment |
| | RDA DATA PROCESSOR (RDASC) CB15, 17, and 19 (Ganged) | Provides power to the RDA Status and Control processor |
| | SIGNAL PROCESSOR CB16 and 18 (Ganged) | Provides power to the Signal Processor |

- - - - -
* Redundant

Table 6-22. RDA Group Circuit Breaker Identification (continued)

| Equipment/Location | CB/Switch | Function |
|---|---|---|
| RDA Secondary Power Distribution Panel UD7A3 (DoD and NWS non-redundant systems) | TELEPHONE CB20 | Provides uninterruptible power to convenience outlet for MCI telephone equipment (DoD sites only - provides WX data to FAA WARP) |
| | RECEIVER CB22 | Provides power to the receiver cabinet |
| | MLOS SHELTER CB24 and 26 (Ganged) | Provides power to the Micro-wave Line of Site (MLOS) shelter power distribution panel (Selected NWS sites) |
| | RPG DATA PROCESSOR and COMMUNICATIONS ASSEMBLY (RPGPCA) CB25, 27, and 29 (Ganged) | Provides power to the UD70 RPGPCA cabinets. (DoD sites only) |
| RDA Secondary Power Distribution Panel #1 (UD7A3 for Channel 1 equipment) and #2 (UD7A29 for Channel 2 equipment) (NWS and FAA redundant sites) | TRANSMITTER CB1, 3, and 5 (Ganged) | Provides power for the transmitter |
| | PEDESTAL MOTOR POWER CB2, 4, and 6 (Ganged) (For FAA redundant Secondary Power Distribution Panel #2 only) | Provides power for pedestal motors |

- - - - -
* Redundant

Table 6-22. RDA Group Circuit Breaker Identification

| Equipment/Location | CB/Switch | Function |
|---|---|---|
| RDA Secondary Power Distribution Panel #1 (UD7A3 for Channel 1 equipment) and #2 (UD7A29 for Channel 2 equipment) (NWS and FAA redundant sites) | RDASC PROCESSOR CB15, 17, and 19 (Ganged) (FAA redundant systems only) | Provides power for the RDA status and control processor. |
| | SIGNAL PROCESSOR CB16 and 18 (Ganged) | Provides power to the signal processor |
| | RECEIVER CB22 | Provides power to the receiver |
| | W/G COMP/DHYD CB10 (FAA redundant systems only) | Provides power to the waveguide pressurization unit |
| | MLOS SHELTER CB24 and 26 (Ganged) (if applicable) | Provides power to Microwave Line of Sight (MLOS) shelter power distribution panel |
| | RPG DATA PROCESSOR and COMMUNICATIONS ASSEMBLY (RPGPCA) CB25, 27, and 29 (Ganged) (FAA redundant systems only) | Provides power to the RPG Processor Communications Assembly (RPGPCA) cabinets UD70/170. |
| | TRANSMITTER UTILITY POWER CB7 (NWS Redundant Systems) | Provides cabinet utility outlet power to the transmitter |
| | TRANSMITTER UTILITY POWER CB9 (FAA Redundant Systems) | Provides power to the transmitter cabinet utility outlet |
| RDA Secondary Power Distribution Panel #3 UD7A30 (applicable only to NWS Redundant systems) | PEDESTAL MOTOR POWER CB2, 4, and 6 (Ganged) | Provides power to pedestal motors |
| | MLOS RADIO CB7 | Provides power to the Microwave Line of Site (MLOS) cabinet |
| | W/G COMPRESSOR /DEHYDRATOR CB8 | Provides power to the wave-guide pressurization unit for Channel 2 UD6 |

- - - - -
* Redundant

Table 6-22. RDA Group Circuit Breaker Identification (continued)

| Equipment/Location | CB/Switch | Function |
|---|---|---|
| | W/G COMPRESSOR /DEHYDRATOR CB10 | Provides power to the wave-guide pressurization unit for Channel 1 UD106 |
| | RDA DATA PROCESSOR (RDASC) #1 CB9, 11, and 13 (Ganged) | Provides power to the Channel 1 RDA Status and Control processor UD105 |
| | RDA DATA PROCESSOR (RDASC) #2 CB15, 17, and 19 (Ganged) | Provides power to the Channel 2 RDA Status and Control processor UD5 |
| Generator Shelter UD10 | UTILITY POWER DISCONNECT switch S1 | Commercial power disconnect (Safety) switch provides commercial to 400 amp auto transfer switch for the WSR-88D Radar and Real Property Installed Equipment (RPIE) |
| | GENERATOR POWER DISCONNECT switch MG1S1 | Generator power disconnect switch provides power to the 400 amp auto transfer switch for the WSR-88D Radar and RPIE |
| Generator Shelter AC Power Distribution Panel UD10A2 | MAIN DISCONNECT CB1 and 3 (Ganged) | Provides phases A and C for distribution by the AC load center |
| | INTERIOR AND EXTERIOR LIGHTS CB5 | Provides power for generator shelter interior and exterior lights |
| Generator Shelter AC Power Distribution Panel UD10A2 | GENERATOR BLOCK HEATER CB2 | Provides power for generator block heater |
| | SHELTER RECEPTACLES CB4 | Provides power for generator shelter receptacles |
| | ROOM HEATER CB6 and 8 (Ganged) | Provides power for generator shelter heater |
| | LOUVERS AND FANS CB7 | Provides power for generator shelter louver and fans |
| Transfer Switch Cabinet UD10A1 | AUTO/MANUAL switch S14 | Auto position enables automatic transfer |

- - - - -
* Redundant

Table 6-22. RDA Group Circuit Breaker Identification (continued)

| Equipment/Location | CB/Switch | Function |
|---|---|---|
| | TEST/NORMAL/ RETRANSFER switch | Normal position sets transfer switch for automatic operation |
| Antenna/Pedestal UD2 | Elevation Stow Lock Pin and Azimuth Stow Lock Pin | Permits elevation and azimuth drive to be provided to drive motors when both azimuth and elevation stow pins are in operation stow position |
| | PWR ON/SAFE Safety Interlock Switch | Permits power to be applied to azimuth and elevation drive motors |
| | AIRCRAFT WARNING LIGHTS switch | Provides AC voltage for the aircraft warning lights |
| RDA Maintenance Panel UD5A2 | PEDESTAL ELECTRONICS POWER switch (UD105 switch is inoperable) | Provides power to the pedestal electronics and power amplifier UD5A7 |
| | DAU POWER switch | Provides power to the DAU |
| CSU UD5A18 (applicable only to NWS redundant systems) | Unplugged from UD5A14 | Removes power to the CSU |

- - - - -
* Redundant

Table 6-22 entries on page 6-763 deleted.

# Section 6-6. Alignment and Adjustment Procedures

## 6-6.1 GENERAL.

This section contains procedures to align and adjust those elements of the RDA Group which are not covered in commercial manuals. The following procedures are referenced in Sections 6-3, 6-4, and 6-5 of this manual. Procedures for the alignment/adjustment of components located in Radar Transmitter UD3, Antenna Pedestal UD2, and Waveguide Pressurization Unit UD6 are found in their respective commercial manuals, NWS EHB 6-511, 6-513*/6-514*, and 6-512*/6-512-1*. Table 6-22 consists of an index for the RDA elements Adjustment and Alignment.

**NOTE**

This section refers to the RDADP as UD5, the Receiver as UD4, the Transmitter as UD3, and the Waveguide Pressurization Unit as UD6. Unless otherwise specified, the information also applies to redundant systems UD105, UD104, UD103, and UD106.

## 6-6.2 SETUP RESTORATION PROCEDURES.

Paragraph 6-6.15 contains the steps used to establish the initial conditions for the RDA maintenance procedures. Paragraph 6-6.16 contains the steps needed to restore the RDA to operational mode. Since a power meter is used in the procedures, paragraph 6-6.22 is provided for calibration. Note that the procedure in paragraph 6-6.22 is unique to the HP436A Power Meter and does not apply to other power meter makes or models. It is assumed that the technician is familiar with operation of the test equipment used in these procedures. The procedures in paragraphs 6-6.15, 6-6.16, and 6-6.22 are performed in total or in part when called for within the other procedures and are provided to eliminate redundancies.

## 6-6.3 AZIMUTH/ELEVATION ENCODER ALIGNMENT DESCRIPTION.

In this procedure, the elevation encoder is aligned to indicate 0 degrees when the line of sight of the antenna is parallel with the plane of the earth (level). The azimuth encoder is aligned to indicate the azimuth degrees shown on the azimuth plate with the azimuth 0 degree stow lock in the stowed position. The procedure requires the antenna to be stowed, and the body of the encoders to be turned for an output value of 0 degree of elevation and the listed azimuth degrees, for azimuth. The output of the encoders is read at the RDA maintenance terminal by observing the Main Menu of RDA Applications Program or (for more accuracy) using RDASOT. Refer to paragraph 6-6.17 for procedure.

## 6-6.4 ELEVATION PRE-LIMIT AND FINAL LIMIT SWITCH ADJUSTMENT DESCRIPTION.

The elevation encoder alignment must be verified prior to performing the elevation pre-limit and final limit switch adjustment procedures. In this procedure the lower pre-limit and final limit

- - - - -

* Site dependent

switches are set to the established lower elevation limits, while the upper pre-limit and final limit switches are set to the established upper elevation limits. The RDASOT program is used to provide the antenna elevation position data; refer to paragraph 6-6.18 for procedures.

## 6-6.5 CLOGGED FILTER INDICATOR (CFI) DESCRIPTION.

The intake filters of air conditioners AC1 and AC2 and Transmitter UD3 trap lint, dust, and other debris. The Clogged Filter Indicators are airflow activated, and are adjusted to trip at different levels of airflow restriction. When two-thirds or more of the airflow is restricted by debris, the CFIs will trip, indicating that the filter should be replaced. Refer to paragraph 6-6.19 for the procedure to replace the filter and set the proper CFI trip level.

Table 6-23. LRU Alignment/Adjustment Index

| Description | Redundant System Non-Operational | Paragraph Number |
|---|---|---|
| AGC Threshold Voltage Adjustment | | 6-6.24.4 |
| AGC Clocks 1 and 2 Alignment | | 6-6.24.7 |
| Calibration of Noise Path and Internal Noise Source 4A25 | * | 6-6.28.3.3 |
| Calibration of Test Attenuator 4A23 | * | 6-6.28.3.4 |
| Azimuth D/A Converter Adjustment | | 6-6.30.3.1 |
| Azimuth/Elevation Encoder Alignment | * | 6-6.17 |
| AZ TACH Adjustment | | 6-6.30.4.1 |
| Clogged Filter Indicator Alignment | | 6-6.19 |
| CW Test Path Calibration | * | 6-6.28.3.1 |
| RF Drive Path Calibration | * | 6-6.28.3.2 |
| Elevation D/A Converter Adjustment | | 6-6.30.3.2 |
| Elevation Pre-Limit and Final Limit Switch Adjustment | * | 6-6.18 |
| EL TACH Adjustment | | 6-6.30.4.2 |
| Guard Band IF Amplifier Alignment | | 6-6.25.3 |
| I/Q Phase Detector DC Offset Adjustment | | 6-6.24.3 |
| I/Q Phase Detector Gain Adjustment | | 6-6.24.2 |
| IF Amplifier/Limiter Gain Adjustment (Initial) | | 6-6.24.1 |
| IF Amplifier/Limiter Gain Adjustment (Final) | | 6-6.24.6 |
| Interference Suppression Unit Alignment | | 6-6.25 |
| Path Loss Calibration | * | 6-6.31 |
| Power Meter Calibration | | 6-6.22 |
| RDA Data Processor Power Supplies Adjustment | | 6-6.21 |
| RDA Power Monitor Bias Adjustment | * | 6-6.27 |

- - - - -

* A redundant system can not operate; both channels must be off to perform this alignment.

Table 6-22. LRU Alignment/Adjustment Index (continued)

| Description | Redundant System Non-Operational | Paragraph Number |
|---|---|---|
| Receiver Interface Output Selector (RIOS) Functionality in RDASOT | | 6-6.34 |
| Receiver Power Supplies Adjustment | | 6-6.20 |
| RF Generator Checkout | | 6-6.23 |
| RF/IF Test Monitor Alignment | | 6-6.26 |
| Delayed Klystron Path Calibration | * | 6-6.28.3.5 |
| Analysis of RDA Performance Data | * | 6-6.28.1 |
| Solar Calibration | | 6-6.28.3.6 |
| Standalone Dial Modem Setup Procedure | | 6-6.35 |
| Statistical Multiplexer Setup Procedure | | 6-6.34 |
| Off-line Calibration Checks | | 6-6.28.2 |
| Waveguide Path Loss Measurement | | 6-6.31 |

- - - - -

* A redundant system can not operate; both channels must be off to perform this alignment.

6-6.6 RECEIVER POWER SUPPLIES ADJUSTMENT DESCRIPTION.

Power supplies PS1 through PS9 POWER ON indicators are lit when the supplies are receiving AC power. The voltage levels on the supplies are adjustable. Test points on the power supplies provide a convenient place to read the DC power output with a voltmeter. Power supplies PS2 through PS9 current limiting adjustment is preset to a maximum value before the voltage level is set. This provides a constant voltage output for load current levels, within the maximum limitations of the power supply. Refer to paragraph 6-6.20 for procedure.

6-6.7 RDA DATA PROCESSOR POWER SUPPLY ADJUSTMENTS DESCRIPTION.

Power supplies PS1, PS2, and PS3 POWER ON indicators are illuminated when the supplies are receiving AC power. The voltage levels on the supplies are adjustable. Test points on the power supplies provide a convenient place to read the DC power output with a voltmeter.

a. Power supplies PS1 and PS3 current limiting adjustment is preset to a maximum value before the voltage level is set. This provides a constant voltage output for load current levels, within the maximum limitations of the power supply.

b. Power Supply PS2 provides power to the Programmable Signal Processor and the Hardwired Signal Processor, which draw a high current. This high current may cause a considerable voltage drop across the lines which distribute DC power to the load. For this reason, the voltage adjustment is made while observing that the load receives the desired voltage level, as opposed to observing that the power supply is providing the desired voltage level. Refer to paragraph 6-6.21 for procedure.

**NOTE**

For FAA Redundant sites, the Remote Monitoring Subsystem imposes a small additional load on the RDA power supplies. This load will normally be negligible, however, power supply outputs should be verified with the RMS in the operational mode.

6–6.8 HP436A POWER METER CALIBRATION.

Refer to paragraph 6–6.22 for the HP436A power meter calibration procedure.

6–6.9 RF FREQUENCY GENERATOR CHECKOUT DESCRIPTION.

The RF Frequency Generator provides the master signal reference for the RDA signal processing and calibration. The frequency and amplitude of each output are checked and recorded in this procedure. Refer to paragraph 6–6.23.

6–6.10 RECEIVER CHANNEL ALIGNMENT DESCRIPTION.

The radar receiver channel alignment is a four–part procedure. The following paragraphs describe each of these parts.

6–6.10.1 IF Amplifier/Limiter Noise Reference Level Adjustment. The noise floor of the receiver is the noise power out of the receiver in the absence of an input signal. It is caused by the cumulative effect of the inherent thermal noise generated in each component of the receiver chain, amplified by the gains (if any) of the components. The no input condition of the receiver is accomplished by disabling the transmitter and pointing the antenna into space (23 degrees elevation, 0 degrees azimuth, or as defined in adaptation data for park). In this position, the noise received from space by the antenna and sent to the receiver front end is less than the thermal noise that would be injected by a resistive termination connected to the receiver front end in place of the antenna. For this alignment, the noise power is measured at the output of IF Amplifier/Limiter, and the gain of the receiver is adjusted to a –50 dBm receiver noise reference level. Refer to paragraph 6–6.24.1.

6–6.10.2 I/Q Phase Detector Gain and DC Offset Adjustment. Once the noise floor is established, the gain of both channels of the I/Q phase detector must be set. This is done by injecting an RF signal at an offset from the carrier frequency of roughly 15 kHz into the Mixer Preamp. The amplitude of this signal is adjusted to provide –20 dBm of IF signal power at the input to the I/Q phase detector. With this input, the I and Q video outputs of the I/Q phase detector will be nominally 15 kHz sine waves. The amplitude of both the I and Q video is set to 77.4 mV rms by adjusting the gain controls on the I and Q phase detector. At this point, the DC offset of the I/Q phase detector must be zeroed out. This is done by terminating the IF input to the I/Q phase detector and adjusting the I video amplifier and Q video amplifier DC offset control to obtain 0 Vdc at each video output. Refer to paragraph 6–6.24.2 for Gain Adjustment and paragraph 6–6.24.3 for DC Offset Adjustment.

6–6.10.3 AGC Controller Threshold Adjustment. This alignment sets the threshold level at which the AGC controller commands the IF attenuator to insert an attenuation step. The alignment

is performed by injecting an RF signal into the mixer and increasing its amplitude until the AGC controller commands an IF attenuator step. This point is noted by observing an abrupt decrease in the amplitude of the I and Q video. The Log Video Offset control of the AGC controller is then adjusted so that the maximum amplitude of the I and Q video before insertion of attenuation is 3.0 volts peak to peak. Refer to paragraph 6-6.24.4 for Threshold Adjustment.

6-6.10.4 AGC Clocks 1 and 2 Alignment. This procedure sets up the timing relationships between the AGC Controller 4A13 and the Analog-to-Digital Track and Hold circuits in the Analog-to-Digital Converter 4A11. The AGC controller controls the insertion of IF attenuation, if required, for strong signals. This procedure should improve the clutter suppression performed in the signal processor. Refer to paragraph 6-6.24.7 for the AGC Clocks alignment.

## 6-6.11 INTERFERENCE SUPPRESSION UNIT (ISU) ALIGNMENT DESCRIPTION.

The purpose of the ISU alignment is to match the gain of the upper and lower guard band channels (G(+) and G(-)) to that of the main log channel, and to adjust the fixed threshold of the interference detector. Refer to paragraph 6-6.25 for procedure.

6-6.11.1 Guard Band Gain Match. To perform the gain match alignment, an RF signal at the transmitter frequency is injected into the Mixer/Preamp and the IF signal power at the output of the Matched Filter is measured. The frequency of the injected RF signal is then offset by 6.5 MHz to the center of the upper guard band, and the power at the output of the upper guard band filter is measured. The Upper Guard Band Gain control of the Guard Band IF Amplifier is adjusted so that the Upper Guard Band Filter power and the Matched Filter power are equal. The procedure is repeated for the lower guard band channel. To ensure the linearity of log slope of each of the Multiple Output Log Amplifier/Detectors is in tolerance, the video output of the main (G(+) and G(-)) log amplifier/detector is measured at three different power levels. If the log slope is in tolerance, the gain of the Guard Band IF amplifier is adjusted to compensate for small gain offsets in the (G(+) and G(-)) log amplifier/detectors.

6-6.11.2 Interference Detector Threshold Adjustment. After gain match has been achieved, the fixed threshold voltage of the interference detector is set to 350 mV above the highest ambient noise level measured at the output of the three log amplifier/detectors. The receiver is restored to normal operation with no input, and the output of the main (G(+) and G(-)) log amplifier/detectors are measured. The fixed threshold voltage in the interference detector is then measured and adjusted using the Fixed Threshold Control. The fixed threshold establishes the signal level above which interference will be declared.

## 6-6.12 RF/IF TEST MONITOR ALIGNMENT DESCRIPTION.

The RF/IF Test Monitor accepts one of five analog input signals and converts it to a digital signal using an A/D converter. It then detects the peak of the signal using a digital peak detector. Potentiometer R78 is used to adjust the A/D Converter Reference Voltage Source, which sets the volts per bit transfer ratio. Refer to paragraph 6-6.26 for procedure.

6-6.13 RECEIVER/SIGNAL PROCESSOR CALIBRATION DESCRIPTION.

The Receiver Signal Processor generates three base data products from the radar returns. The products are as follows:

- Reflectivity Estimate
- Velocity Estimate
- Spectrum Width Estimate

An On-Line Reflectivity Calibration using simulated target returns and continuous wave (CW) signals is performed at every volume scan. Refer to Chapter 5 for additional information on this procedure.

Upon RDA startup and every eight hours thereafter, a Reflectivity Calibration Check is performed using a test signal derived from the klystron output and delayed by 10 microseconds. Refer to Chapter 5 for additional information on this procedure.

The RDA software is initially loaded with two initial system calibration values, one for short pulse and one for long pulse operation. During the on-line calibration procedure which is performed at every volume scan, the system calibration value (SYSCAL), calculated from the test signal measurements, is compared to the original calibration value and the difference is displayed on the RDA summary data as CALIB#. This parameter, therefore, is a good indicator of the quality of the on-line reflectivity calibration. The stability of the on-line calibrations depend mainly upon the following factors:

- Test Signal Amplitude Stability
- Transmitted Pulse Width
- Transmitted Peak Power

Long term drifts of these parameters are compensated for by the Receiver/Signal Processor Calibration procedure (refer to paragraph 6-6.28 ). It is necessary to perform this procedure only when alarms that monitor the test signals used for the reflectivity calibration and check are detected. These alarms are:

- LIN/LOG CHAN GAIN CHECK MAINT REQ'D
- LIN/LOG CHAN GAIN CAL CHECK DEGRADED
- LIN/LOG KLY OUT TEST SIGNAL DEGRADED
- LIN/LOG CHAN RF DRIVE TEST SIGNAL DEGRADED

The Receiver/Signal Processor Calibration procedure is divided into three parts: RF/Test Signal Power Measurements, Transmitter Reference Measurements, and Calibration Analysis.

6-6.13.1 CW Test Signal Injection Calibration. This off-line calibration procedure ensures that the levels of the CW test signals injected into the receiver during automatic calibration are consistent

with the values used by the automatic calibration routines. This procedure checks only the CW test signal injection even though klystron drive pulse test signals are also used during automatic calibration. Consistency checks between pulse and CW calibration are made by the automatic calibration routines so that confirming CW calibration is sufficient to ensure system refractivity accuracy. The procedure consists of stowing the antenna, disconnecting the test signal injection cable at the receiver front end (RFE) and connecting an RF power meter to the cable. An off-line test program (TESTSIG) is used to turn on the CW test signal, direct it to the RFE, and set the test attenuator to appropriate values. Then, using RDA applications program adaptation data, values for CW source power and path losses are read and the expected power levels calculated as a function of test attenuator setting. The measured test signal values are compared to the values expected from adaptation data and, if necessary, the adaptation data is adjusted to make them agree within a specified tolerance.

6-6.13.2 System Noise Calibration. This calibration ensures the validity of the system noise temperature measurements. Spot noise figure of the receiver is measured with and without injection of noise from the RF test source into the receiver. The excess noise ratio (ENR) at the receiver injection point is the difference in measured noise figure (ratio) with noise injection and without noise injection. The measured ENR is compared with the ENR value stored in adaptation data adjusted for path losses (also taken from adaptation data). The adaptation data is changed as required.

**NOTE**

The ENR of a noise source is its output noise power density in dB referenced to the output thermal noise power density of a matched impedance at 290°K (approximately 60°F). In absolute terms, this reference corresponds to 173.9 dBm/Hz of power. For example, a source with an ENR of 20 dB would output 153.9 dBm/Hz of power. If it had a flat bandwidth of 1 MHz, the average output power would be -153.9 dBm + 10 log 1 MHz = 93.9 dBm.

6-6.13.3 RF Power Sensor Calibration and High Power Pulse Width Measurement. RF Power Sensor Calibration is checked by measuring the RF power into the RF power sensors at the highest PRI (i.e. PRI number 8) using test software to control the system. Using the operational program, the average power measured by the system on the low angle surveillance cuts is read from the maintenance console display. The path losses between the power reference points and the power sensors are extracted from adaptation data and actual power at the reference points is calculated. The difference between the calculated power at the reference point and the power determined by the operational program is the average power calibration error. If required, adaptation data scale factors are adjusted to bring them into agreement. Measurements at the antenna RF power sensor require that the antenna be stopped and stowed at a convenient position. As an additional check, the transmitted RF pulse width is measured. The pulse width is used with the PRF to calculate peak power from the average power.

6-6.14 RDA POWER MONITOR BIAS ADJUSTMENT DESCRIPTION.

This procedure provides a means to check and correct excessive bias offsets in the antenna and transmitter power monitors. The alignment is performed by using SOT to display the A/D output of

both power monitor circuits going to the RDASC. The maintenance terminal will display a table of values for each power monitor. The bias value must be maintained at midrange (around 5 for the transmitter and around 10 for the Antenna Power Monitor). The XMTR and ANT power meter adjustments on the RDADP Maintenance Panel are adjusted to provide the correct values. Note that the RDASC automatically compensates for power monitor bias. This alignment is needed to ensure that the bias does not exceed the range of values for which the RDASC can compensate. Refer to paragraph 6-6.27 for the procedures to be followed to accomplish the adjustment.

6-6.15 RDA MAINTENANCE PROCEDURES INITIAL SETUP.

These procedures can be used to establish the following conditions at the RDA:

1. RDA in local control
2. RDA applications program set in standby or terminated
3. Transmitter high voltage secured in Local Control mode
4. Pedestal drive power secured
5. Pedestal elevation and azimuth assemblies stowed and pinned

These procedures require two technicians, one in the RDA Shelter, and one in the radome.

6-6.15.1 Equipment and Tools Required.

1. 20-foot extension ladder
2. Screwdriver, flat-tip, 6-inch blade, 1/4-inch tip
3. Warning signs
4. Safety tags
5. Harness, Safety

6-6.15.2 Initial Conditions/Preliminary Setup. The initial condition is a normally operating WSR-88D Unit with RDA in remote control.

6-6.15.3 Initial Setup Procedures.

1. Transfer to local RDA control by performing steps 1.a through 1.d starting at an MSCF workstation and concluding at the RDA Maintenance Terminal.

   At the MSCF workstation:

   a. On the HCI (Active/Controlling channel only for FAA Redundant systems), click the Control block in the RDA container and observe the RDA Control: field. The RDA Control: field should indicate `RPG` assuming the RPG is in control of the RDA.

   b. Click Enable Local (RDA) in the RDA Control area to allow control at the RDA. `Enable RDA control of RDA` noted on Feedback: line on HCI.

**NOTE**

At the RDA shelter, set the security alarm to **UNARMED** by turning exterior key switch from vertical position to horizontal position.

At the RDA Maintenance Terminal:

c. Verify that the RDA Main Menu is displayed; if not, enter **MAIN<Return>** at the current menu to obtain the RDA Main Menu.

d. At the Applications Terminal Main Menu, request local control from the RPG by entering **RELC<Return>** at the command line. Observe that `RELC - ACCEPTED` appears on feedback line of menu. `LOC` appears in the MODE field to verify that the RDA is now in local control.

2. To put the RDA in Standby, perform the following steps at the RDA Applications Terminal:

a. At the Main Menu command line, enter **STBY<Return>**. Observe that `STBY ACCEPTED` is displayed on the feedback line of Main Menu.

**CAUTION**

Do not use <Shift> <Clear> while running the RDA Program.

b. Terminate the RDA applications program by performing the following steps at the RDA Applications Terminal:

1. At the Main Menu command line, enter **TERP<Tab>**. Observe that `TERP` is displayed on command line and cursor moves to parameter line.

2. At the parameter line, enter ***password*** **<Return>**. Observe that `TERP ACCEPTED` is displayed.

3. In status area of Main Menu, observe that antenna is moved to and parked at approximately 23 degrees elevation and 0 degrees azimuth.

4. Wait 30 seconds and **simultaneously** press the **<Shift>** and **<Port>** keys.

3. At Radar Transmitter, obtain local control with high voltage secured by performing the following steps:

   a. At the CONTROL section of the Transmitter Control Panel UD3A1, verify that transmitter is in system mode by observing the MAINT/SYSTEM switch. Verify that SYSTEM indicator (orange) is illuminated and MAINT is not illuminated.

   b. Verify that high voltage is off by observing the HVOFF/NO CONTROL and HVON/NO CONTROL indicators. Observe that HVOFF indicator (white) is illuminated, HVON indicator is not illuminated, and both NO CONTROL indicators (orange) are illuminated.

   c. Put transmitter in maintenance mode (local control) by pressing and releasing MAINT/SYSTEM switch. Observe that MAINT indicator (white) is illuminated and SYSTEM indicator is not illuminated.

   d. Verify that the NO CONTROL indicators are not illuminated on the HVOFF/NO CONTROL and HVON/NO CONTROL lamp switches.

   e. Put a SAFETY WARNING tag over the control panel of the transmitter.

   f. At the W/G switch located above each transmitter, disconnect J1 from P1.

**NOTE**

This is a safety measure to ensure W/G switch remains in the Dummy Load position.

4. Deenergize W/G Pressurization Unit by performing the following steps on the applicable system:

   a. Single Channel Systems - Place CB8 in Secondary Power Distribution Panel UD7A3 to **OFF**.

   b. FAA Redundant Systems - Place W/G Pressurization circuit breakers in Secondary Power Distribution Panel #1 UD7A3 and/or #2 UD7A29 to **OFF**.

   c. NWS Redundant Systems - Place CB10 (UD106) and/or CB8 (UD6) in Secondary Power Distribution Panel #3 UD7A30 to **OFF**.

**WARNING**

Failure to perform next shutdown step could result in serious injury or death from antenna radiation or antenna movement.

5. Secure pedestal motor drive power by performing the following steps on the applicable system:

   a. At the RDA Maintenance Panel UD5A2, set the Pedestal Electronics Power ON/OFF switch to the **OFF** position. Place a SAFETY WARNING tag on the Pedestal Electronics Power ON/OFF switch.

   b. Single Channel Systems - Place CB2, 4, and 6 in Secondary Power Distribution Panel UD7A3 to **OFF**.

   c. FAA Redundant Systems - Place CB2, 4, and 6 in Secondary Power Distribution Panel #2 UD7A29 to **OFF**.

   d. NWS Redundant Systems - Place CB2, 4, and 6 in Secondary Power Distribution Panel #3 UD7A30 to **OFF**.

6. To ensure the pedestal elevation and azimuth assemblies are properly stowed and pinned, perform the following:

**NOTE**

Be sure to take the tools and equipment specified in the main procedure being performed.

   a. Proceed to radome with tools and specified equipment.

   b. Gain access to radome area through radome hatch and secure in open position. Place safety straps across entrance.

**WARNING**

Failure to place the pedestal PWR ON/SAFE Safety Interlock Switch to the SAFE position could cause serious injury or death.

   c. At the azimuth housing access door (LPP) or azimuth housing riser (FSP), set the PWR ON/SAFE Safety Interlock Switch to **SAFE**. (See Figure 6-56).

**NOTE**

Two people are required to perform steps d and e.

   d. Stow the azimuth axis of the antenna as follows:

**NOTE**

You will be entering a confined space, non-permit required. This means the confined space does not contain any atmospheric hazards capable of causing death or serious physical harm.

(1) Open azimuth housing access door (LPP) or remove access cover plate (FSP) and enter azimuth housing compartment (see Figure 6-56).

(2) Locate Azimuth Manual Drive Assembly UD2A1A3A1 (see Figure 6-57).

(3) Remove safety interlock pin by pressing button while pulling out pin (see Figure 6-58).

(4) Engage handwheel by pushing up while turning. Engagement can be felt as handwheel shaft meshes with motor shaft.

**NOTE**

To remain engaged, it is necessary to maintain constant upward force on azimuth handwheel.

**WARNING**

Do not rest the ladder on the elevation housing. Place the end of the ladder hooks on the support bracket below elevation access door.

(5) With one person in the azimuth housing ready to rotate the antenna using the azimuth handwheel, the other climbs up to the azimuth stow pin assembly (see Figure 6-56 and Figure 6-59) using a ladder.

(6) At the azimuth stow pin assembly, remove the safety interlock pin by pressing the button while pulling out pin (see Figure 6-60, sheet 1 for LPP or sheet 2 for FSP).(see Figure 6-60, sheet 1 for LPP or sheet 2 for FSP).

(7) Have the person in the azimuth housing rotate the antenna until the stow pin seat is aligned with the stow pin (see Figure 6-60, sheet 1 for LPP or sheet 2 for FSP).

**NOTE**

For **LPP sites**, use steps (8) and (9) below. For **FSP sites**, use steps (10) and (11) below.

(8) Using the stow pin handle, push up until the stow pin is in the stow pin seat hole (see Figure 6-60, sheet 1).

(9) While holding the stow pin handle in place, insert the safety interlock pin into the stow hole (see Figure 6-60, sheet 1).

(10) Push the pivot plate up until the notch is centered on the stow pin seat and the pivot plate sits flush against turntable (see Figure 6-60, sheet 2).

(11) While holding the pivot plate in place, insert the safety interlock pin into the stow hole (see Figure 6-60, sheet 2).

(12) The person on the ladder may now climb down, and the person in the azimuth housing may now exit.

e. Stow the elevation axis of the antenna as follows:

(1) Set the 20-foot extension ladder on the ladder hook under elevation housing access door.

(2) Climb up to door and open.

**NOTE**

You will be entering a confined space, non-permit required. This means the confined space does not contain any atmospheric hazards capable of causing death or serious physical harm.

(3) Locate elevation manual drive assembly and engage handwheel in the same way that the azimuth handwheel was engaged (see Figure 6-61).

**NOTE**

It will not be necessary to hold the handwheel to keep it engaged since it is not being pulled down by gravity.

(4) Locate the elevation stow block on the right and left (see Figure 6-59, sheet 1 for LPP or sheet 2 for FSP) and remove the safety interlock pin.

(5) Turn the handwheel until the stow seat hole is aligned with the stow pin.

(6) Insert the stow pin and lock in place with the safety interlock pin as performed for the azimuth.

(7) Close access door.

(8) Climb down ladder and continue with the next step in the procedure that referenced this initial setup.

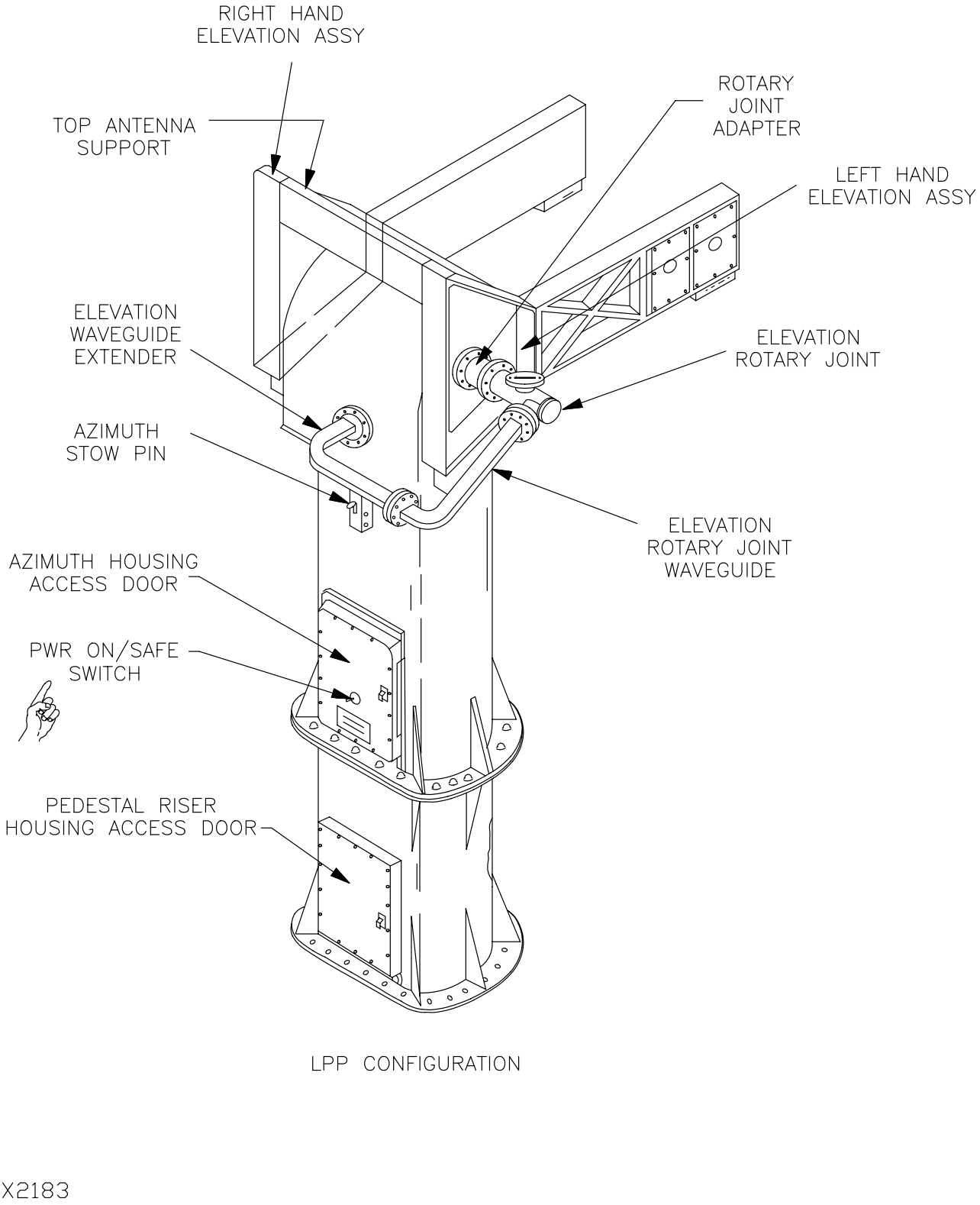


Figure 6-56. Pedestal Assembly (Sheet 1 of 2)

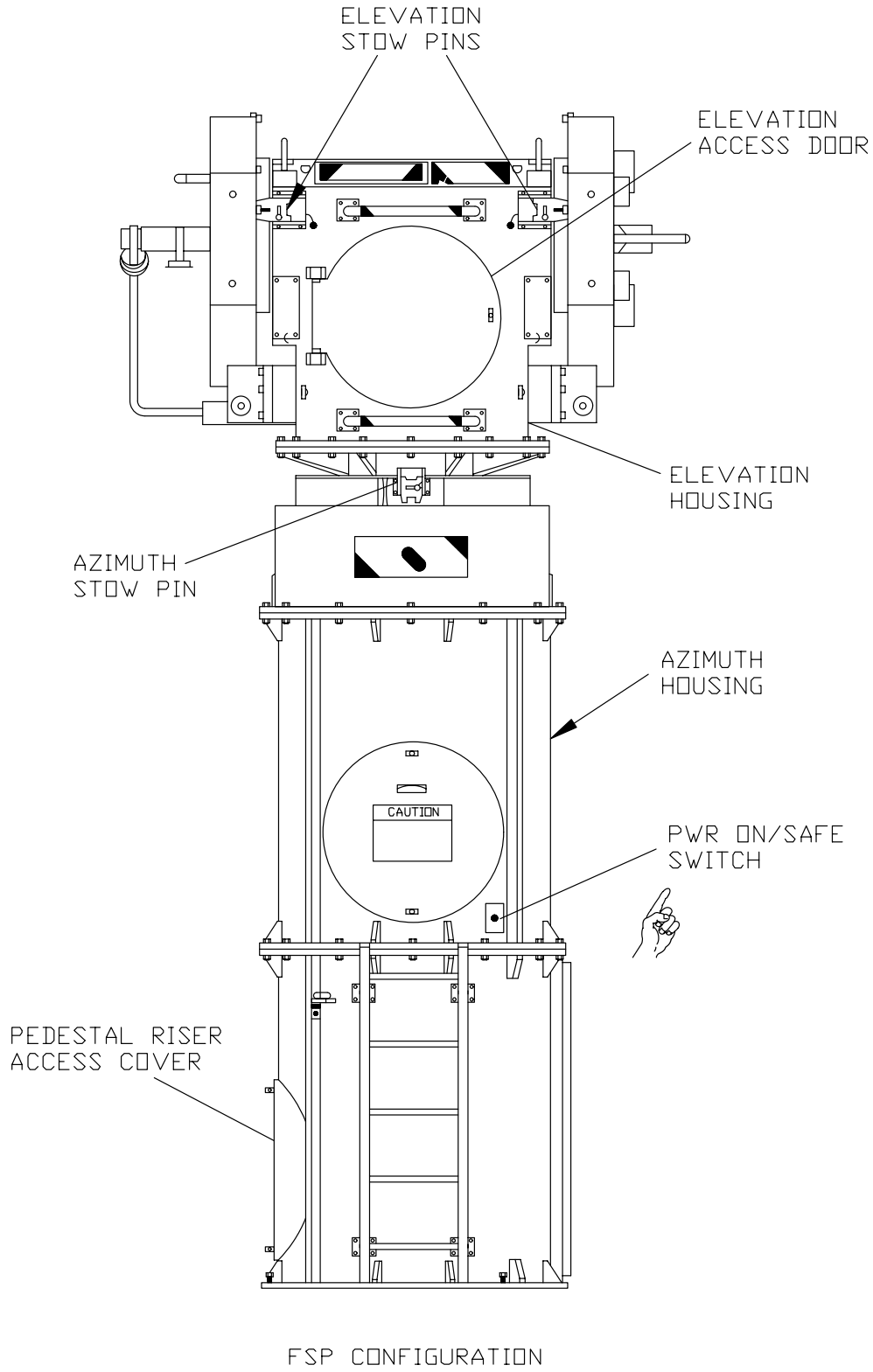


Figure 6-56. Pedestal Assembly (Sheet 2 of 2)

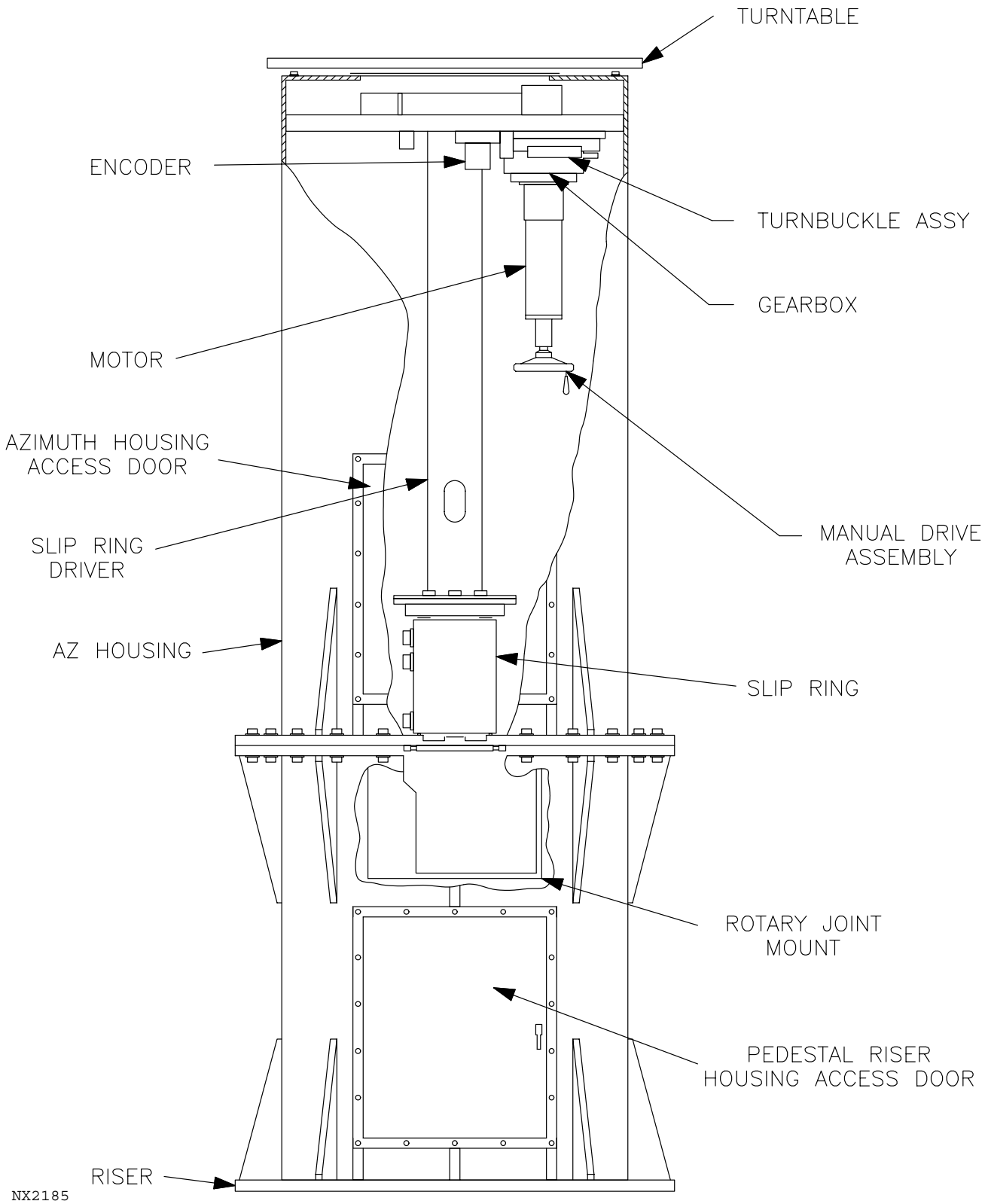


Figure 6-57. Pedestal Assembly (Azimuth Assembly)

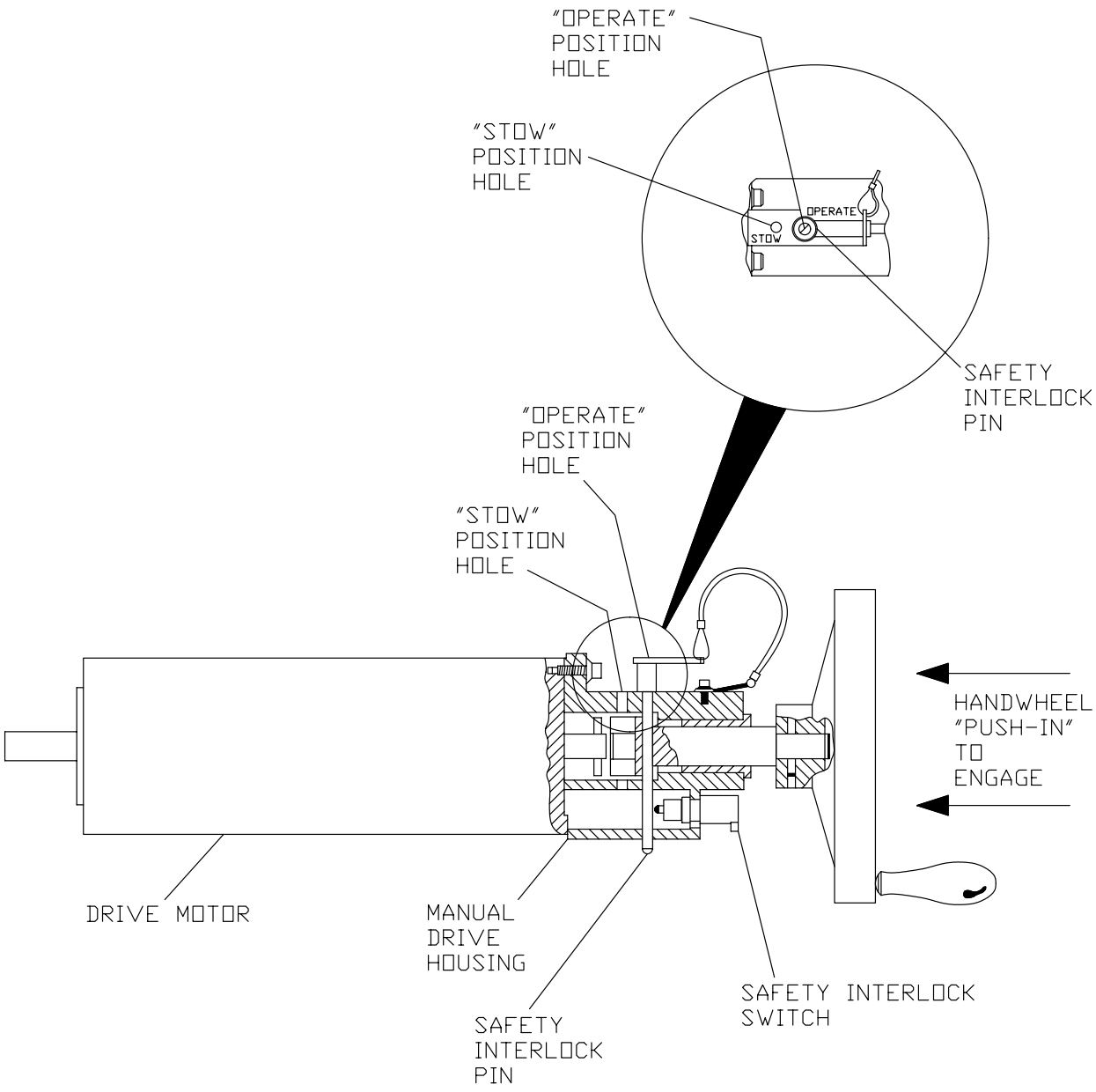


Figure 6-58. Manual Drive Assembly

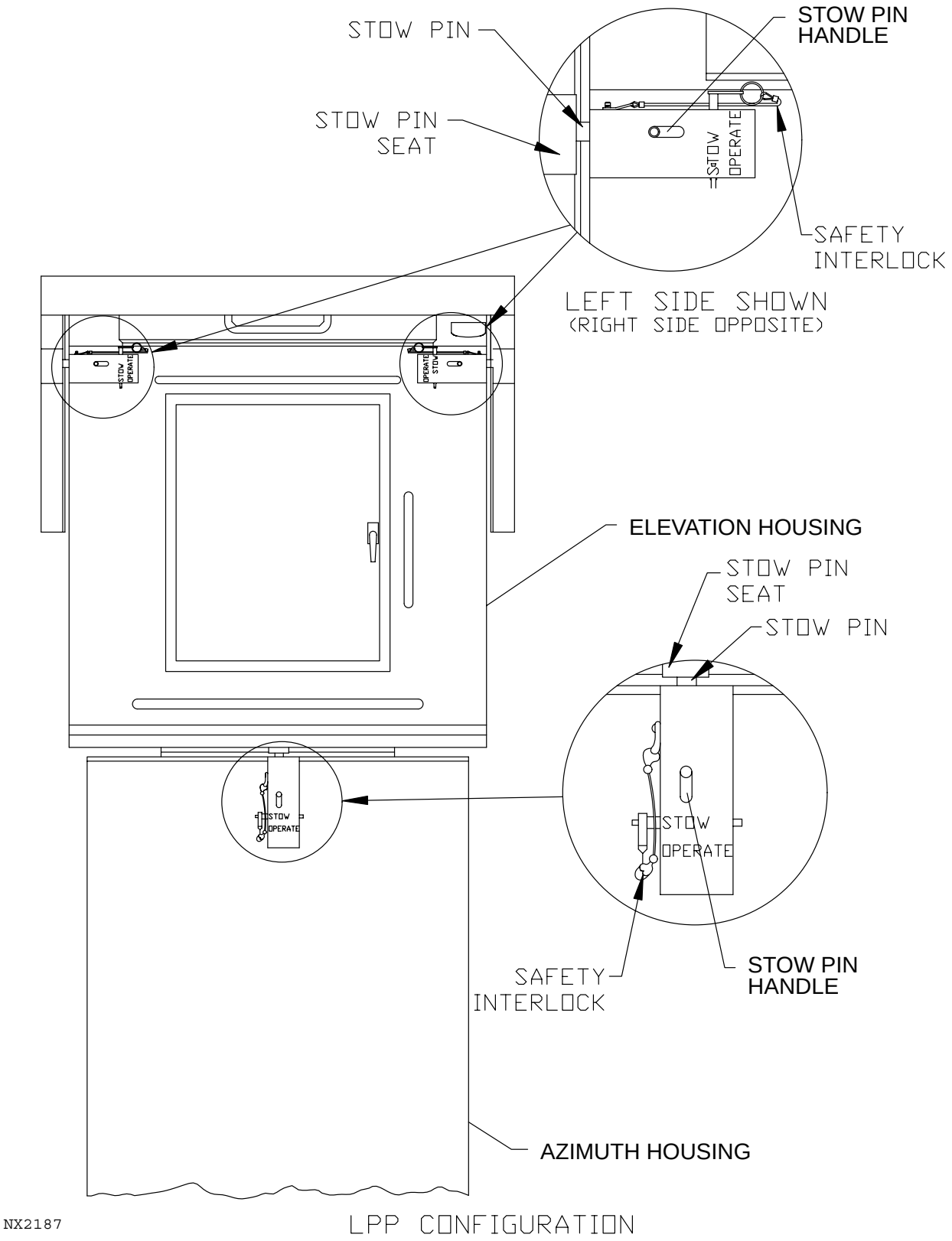


Figure 6-59. Pedestal Stow Pins Engaged (Sheet 1 of 2)

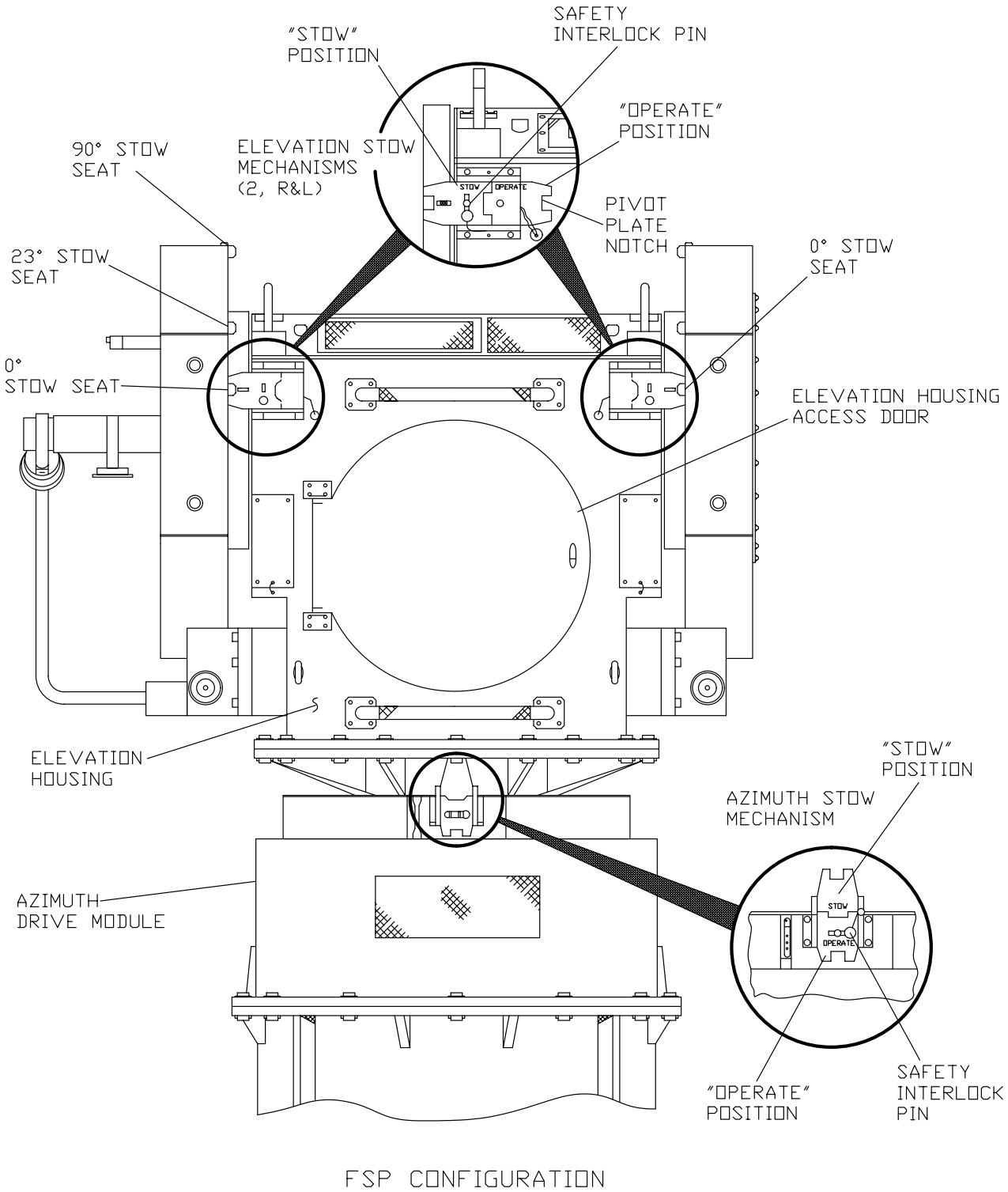


Figure 6-59. Pedestal Stow Pins Engaged (Sheet 2 of 2)

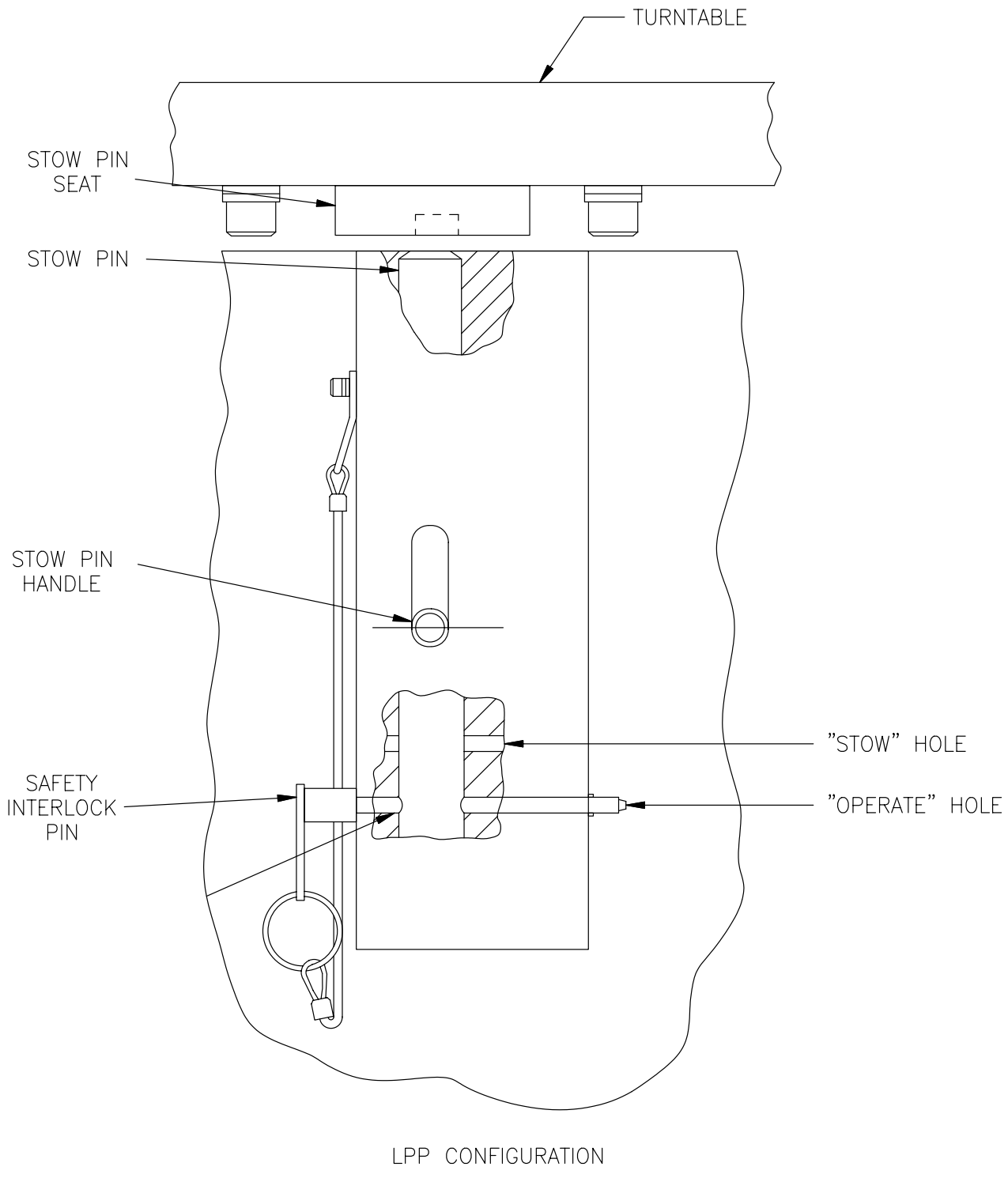


Figure 6-60. Azimuth Stow Pin Assembly (Sheet 1 of 2)

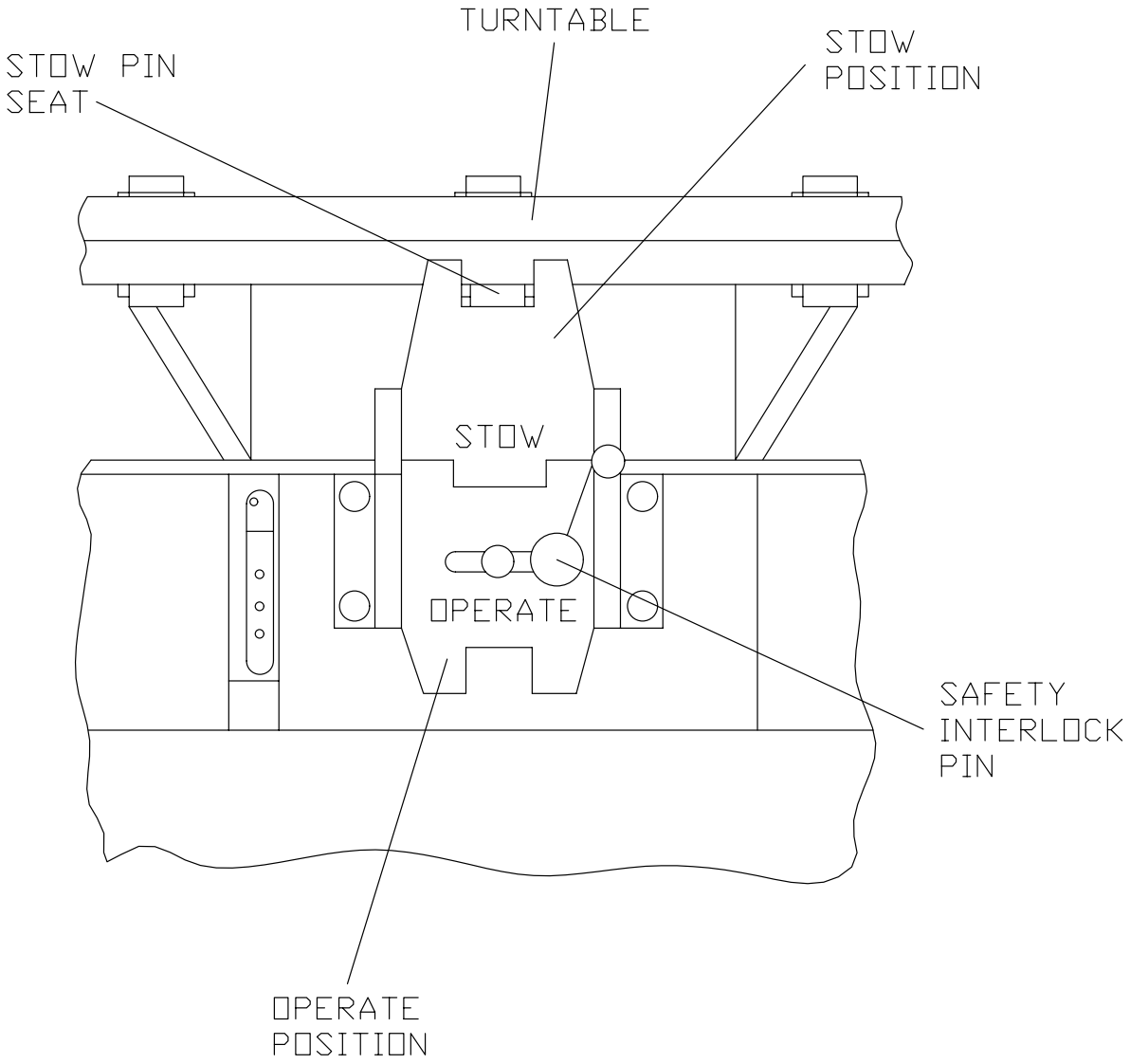


Figure 6-60. Azimuth Stow Pin Assembly (Sheet 2 of 2)

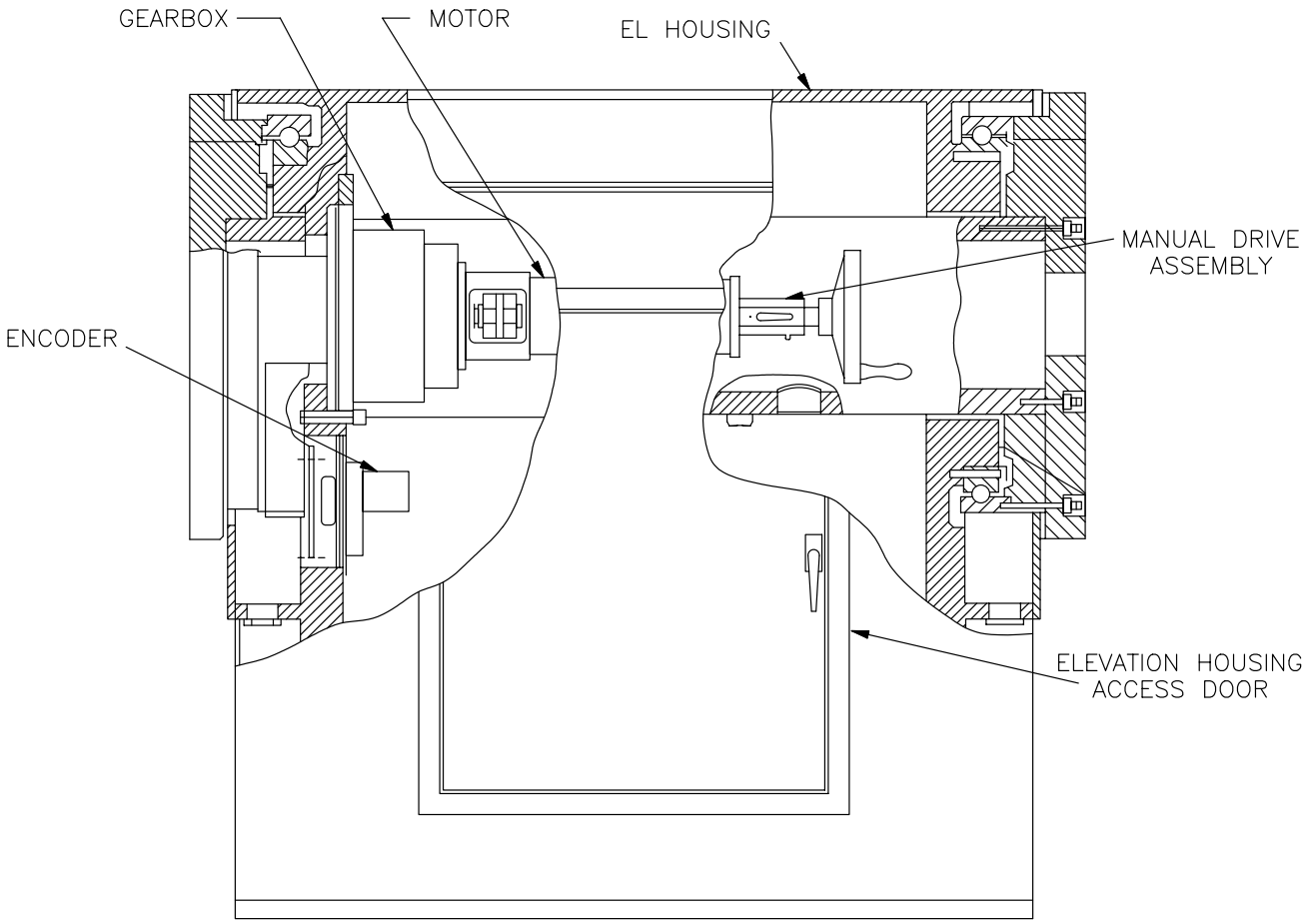


Figure 6-61. Pedestal Assembly (Elevation Assembly)

6-6.16 RDA RESTORATION.

This procedure restores the RDA equipment to normal operating mode from the conditions established in paragraph 6-6.15 . This procedure requires two technicians in the RDA shelter and one in the radome.

6-6.16.1 Equipment and Tools Required.

1. 6-foot step ladder
2. 20-foot extension ladder

6-6.16.2 Initial Conditions/Preliminary Setup. The initial conditions are RDA in Local Control, and:

1. Transmitter HV OFF
2. Antenna servo power secure
3. Antenna stowed in azimuth and elevation

6-6.16.3 RDA Restoration Procedure.

1. In radome, set 20-foot extension ladder on lower elevation housing ladder hook (see Figure 6-59, sheet 1 for LPP or sheet 2 for FSP).

**NOTE**

You will be entering a confined space, non-permit required. This means the confined space does not contain any atmospheric hazards capable of causing death or serious physical harm.

2. Climb ladder, open access door, locate and disengage elevation manual drive assembly (see Figure 6-58) as follows:
   a. Pull handwheel back and insert safety interlock pin into OPERATE hole. Pin will hit handwheel shaft and stop.
   b. While pushing on safety interlock pin, slowly turn handwheel until the hole in shaft lines up with pin. The safety interlock pin will now seat properly.
   c. Close access door.
3. Disengage elevation stow pins (see Figure 6-59) as follows:
   a. Remove safety interlock pin from left stow block.
   b. Pull stow handle to disengage pin (LPP) or move pivot plate to OPERATE position (FSP).
   c. Replace safety interlock pin in OPERATE hole.
   d. Repeat steps a through c at the right stow block.

4. Disengage azimuth stow pin (see Figure 6-60) as follows:

   a. Climb down ladder.

   b. Remove safety interlock pin from azimuth stow block.

   c. Pull stow handle down to disengage stow pin (LPP) or move pivot plate to OPERATE position (FSP).

   d. Replace safety interlock pin in OPERATE hole.

   e. Climb down ladder and secure it in such a manner that it will not interfere with antenna rotation.

**NOTE**

You will be entering a confined space, non-permit required. This means the confined space does not contain any atmospheric hazards capable of causing death or serious physical harm.

5. Enter azimuth housing through access door and disengage the azimuth manual drive handwheel (see Figure 6-58) as follows:

   a. Insert safety interlock pin into OPERATE hole of handwheel. Pin will hit handwheel shaft and stop.

   b. While pushing on safety interlock pin, slowly turn handwheel until the hole in shaft lines up with pin. The safety interlock pin will now seat properly.

   c. Exit azimuth housing and close door (LPP) or install access cover plate (FSP). Remove and secure maintenance ladder.

   d. At the azimuth housing, place the PWR ON/SAFE Safety Interlock Switch in the **PWR ON** position.

6. Exit radome area remembering to close and lock radome access hatch.

7. At the W/G Switch, reconnect J1 to P1.

8. At the Transmitter Control Panel UD3A1, press the MAINT/SYSTEM switch to the SYSTEM mode (SYSTEM indicator (orange) illuminates; remove safety tag.

9. Restore pedestal motor drive power by performing the following steps on the applicable system:

   a. Single Channel Systems - Place CB2, 4, and 6 in Secondary Power Distribution Panel UD7A3 to **ON**.

   b. FAA Redundant Systems - Place CB2, 4, and 6 in Secondary Power Distribution Panel #2 UD7A29 to **ON**.

   c. NWS Redundant Systems - Place CB2, 4, and 6 in Secondary Power Distribution Panel #3 UD7A30 to **ON**.

10. Energize W/G Pressurization Unit by performing the following steps on the applicable system:

    a. Single Channel Systems - Place CB8 in Secondary Power Distribution Panel UD7A3 to **ON**.

    b. FAA Redundant Systems - Place W/G Pressurization circuit breaker in Secondary Power Distribution Panel #1 UD7A3 or #2 UD7A29 to **ON**.

    c. NWS Redundant Systems - Place CB10 (UD106) or CB8 (UD6) in Secondary Power Distribution Panel #3 UD7A30 to **ON**.

11. At the RDA Maintenance Panel, place the Pedestal Electronics Power ON/OFF switch to **ON**. Remove SAFETY WARNING tag from switch.

12. At the RDA System Console, load the RDA applications program by entering **RDAUP<Return>**. System console will respond by displaying the loading sequence of all the CPCI01 files. **Simultaneously** press the **<Shift>** and **<Port>** keys to switch to the Applications Terminal.

13. At the Applications Terminal, wait approximately 1 minute for RDA Program Main Menu to be displayed on the screen.

14. Observe the status area of the Main Menu and verify that the following conditions are met for each field and that no alarms are displayed.

| Field | Condition |
|---|---|
| MODE | LOC |
| ANT/PED | OK |

| Field | Condition |
|---|---|
| XMTR | STBY, after a delay<br>READY refer to note below<br>and Enable Data Transmission |

**NOTE**

If `READY` does not appear after input, enter OPER<Return> at the applications terminal.

15. Transfer control of RDA to MSCF Workstation by performing the following steps:

    At the RDA Applications Terminal:

    a. **<Tab>** cursor to Enable Data Transmission command. Press **<Return>**. **<Tab>** cursor to the Enable Remote Control command. Observe that `ENDT Accepted` is displayed and cursor moves to `ENABLE REMOTE CONTROL` on Main Menu.

b. Press **<Return>**. Observe that `ENRC ACCEPTED` is displayed.

c. Turn off lights, exit RDA shelter, and lock door.

d. Set the security alarm to ARMED by turning exterior key switch from horizontal to vertical position.

At MSCF Workstation UD71:

e. On the HCI (Active/Controlling channel for FAA Redundant systems), observe that the RDA control line between the tower and the RPG container indicates "RPG".

## 6-6.17 AZIMUTH/ELEVATION ENCODER ALIGNMENT.

This procedure provides instructions for aligning Azimuth and Elevation Encoders UD2A1A3A2A1 and UD2A1A1A2A1 to ensure correct values are present when the antenna is stowed and pinned.

The value for azimuth is stamped on a brass plate mounted under the azimuth stow pin on the azimuth assembly. Depending on when your pedestal was installed, the value for the elevation stow position may also be stamped on the brass plate. If not, the elevation encoder will be aligned to Ø degrees for the elevation stow position.

The encoder position will be displayed using RDASOT.

This procedure requires three technicians, one in the RDA shelter and two in the radome.

### 6-6.17.1 Equipment and Tools Required.

1. Ladder, 20-foot extension
2. Headset voice communication device (Qty 1)
3. 3/32-inch hex-key wrench
4. Appropriate safety tags and signs
5. Harness, safety

### 6-6.17.2 Initial Conditions/Preliminary Setup.

**WARNING**

Failure to perform applicable shutdown steps in paragraph 6-6.15.3 could cause serious injury or death from antenna radiation or antenna movement.

1. Perform steps 1, 2, 3, and 6 of paragraph 6-6.15.3 to stow antenna/pedestal. Pedestal drive power must be on for this procedure.

**WARNING**

Failure to place the pedestal PWR ON/SAFE Safety Interlock Switch to the SAFE position could cause serious injury or death.

2. At the azimuth housing, ensure the PWR ON/SAFE Safety Interlock Switch is set to the SAFE position.

**WARNING**

Failure to move azimuth and elevation stow pins from OPERATE to STOW could cause serious injury or death.

3. Ensure that the azimuth and elevation stow pins are in STOW.

**WARNING**

The technician who climbs the ladder is responsible for putting on the safety harness and hooking it to a safe secure position after ascending the 20-foot ladder.

4. Radome technicians (2) remain in radome.
5. Establish radome - RDA shelter communications using headset voice communication device. In radome, plug in communication headset to telephone.

6-6.17.3 Azimuth/Elevation Encoder Alignment Procedure.

1. This procedure is applicable to either the azimuth or elevation encoder. Perform procedure as indicated on the particular encoder being aligned at this time.
2. In the radome, locate the brass data plate mounted near the azimuth stow pin (LPP pedestals) or on the azimuth hatch (FSP pedestals). Record the value(s) stamped on it. The brass plate will always indicate the azimuth stow position relative to true north. It may also show the elevation stow position relative to Ø degrees elevation. Communicate these values to the technician in the RDA shelter and record them for future reference.
3. At the RDA System Console, display the current, uncorrected azimuth and elevation positions by performing the following steps; enter:

| Step | Operator Action | System Response/Comments |
|---|---|---|
| a. | **RDASOT<Return>** | RDASOT Main Menu (Mode Selection Menu for Redundant sites) is displayed. |
| b. | **1<Return>**<br>Redundant sites only | To select FULL mode for this procedure at Redundant sites. |

| Step | Operator Action | System Response/Comments |
|---|---|---|
| c. | **4<Return>** | To select Manual Control and Display Menu. |
| d. | **1<Return>** | To select Control Pedestal; PEDMCD Function Selection Menu is displayed. |
| e. | **1<Return>** | Pedestal positions are displayed. Continue entering **1<Return>** during alignment to update the pedestal position display. |

**NOTES**

Do not attempt to use the "Display Rate and Position" function under the Pedestal Manual Control Menu for position updates. Those position updates are corrected using the Suncheck-provided correction factors presently stored in the LONGTERM.DAT file. An encoder alignment with a correction factor already applied could lead to incorrect alignment.

At the PEDMCD Function Selection Menu, the system console operator must continue to enter 1<Return> during the alignment to update the pedestal position display.

The desired displayed final position will be the values previously recorded in step 2 of this paragraph (± .Ø6 degrees). If the brass plate did not have an elevation stow position value stamped on it, the final elevation position displayed during alignment should be Ø ± .Ø6 degrees.

4. Align Azimuth Encoder UD2A1A3A2A1 or Elevation Encoder UD2A1A1A2A1 as follows:

**NOTE**

You will be entering a confined space, non-permit required. This means the confined space does not contain any atmospheric hazards capable of causing death or serious physical harm.

a. Enter the appropriate housing enclosure through housing access door. Bring the 3/32-inch hex-key wrench and the headset voice communication device.

b. Locate the encoder being aligned and loosen the three retaining screws enough to allow smooth rotation of the encoder. (See Figure 6-62, sheet 1 (LPP) or sheet 2 (FSP) or Figure 6-63).

**NOTE**

Excessive loosening of the encoder screws could cause its anti-backlash gear to disengage from the data package gear,

making it necessary to remove the encoder and reinstall it with the backlash gear properly engaged. In addition, keeping the screws snug during alignment, while still allowing adjustment, will lessen the chance of disturbing the alignment during final tightening.

c. Establish communication with the technician in the RDA shelter.

d. At the RDA System Console, instruct personnel in the radome to turn the encoder body in discrete amounts. After each turn, enter **1<Return>** at the PEDMCD Function Selection Menu to update the position display. Continue this process until the desired position is displayed. For the azimuth encoder, this would be the brass plate value, ± .Ø6 degrees. For the elevation encoder, this would be the brass plate value ± .Ø6 degrees, or Ø ± .Ø6 degrees if the brass plate did not have an elevation stow position stamped on it.

e. When the correct position is achieved, carefully tighten the encoder retaining screws.

f. At the RDA System Console, enter **1<Return>** at the PEDMCD Function Selection Menu to display the current position. If the indicated position for the encoder being aligned is out of tolerance, repeat steps b through e as necessary to achieve the correct alignment.

**NOTE**

It may be necessary to slightly offset the encoder while the screws are loose to achieve correct alignment when the screws are tightened.

5. Perform steps 1 through 14 of paragraph 6-6.16.3 to restore the RDA to normal operation.

6. Perform paragraph 6-6.28.1.5 to run the RDASOT Suncheck routine. This must be done as soon as possible after an encoder alignment to ensure the correction factors in the LONGTERM.DAT file are updated based on the current encoder alignment. Otherwise, operational antenna positions will be incorrectly reported based on the old correction factors.

## 6-6.18 ELEVATION PRE-LIMIT AND FINAL LIMIT SWITCH ADJUSTMENT.

This procedure provides instructions to adjust the upper and lower pre-limit switches UD2A1A1S7 and S5 and final limit switches UD2A1A1S8 and S6, respectively. Three technicians are required for this procedure, one at RDA and two in the radome.

### 6-6.18.1 Equipment and Tools Required.

1. Ladder, 20-foot extension

2. One telephone

3. Digital multimeter
4. 1/4-inch Allen wrench
5. Screwdriver set, flat-tip
6. Harness, safety

6-6.18.2 Initial Conditions/Preliminary Setup.

**WARNING**

Failure to perform applicable shutdown steps in paragraph 6-6.15.3 could cause serious injury or death from antenna radiation or antenna movement.

1. Perform steps 1, 2, 3, and 6 of paragraph 6-6.15.3 to stow antenna/pedestal. Pedestal drive power must be on for this procedure.

**WARNING**

Failure to place the pedestal PWR ON/SAFE Safety Interlock Switch to the SAFE position could cause serious injury or death.

2. At the azimuth housing, ensure the PWR ON/SAFE Safety Interlock Switch is set to the SAFE position.

**WARNING**

Failure to move azimuth and elevation stow pins from OPERATE to STOW could cause serious injury or death.

3. Ensure that the azimuth and elevation stow pins are in STOW.

**WARNING**

The technician who climbs the ladder is responsible for putting on the safety harness and hooking it to a safe secure position after ascending the 20-foot ladder.

6-6.18.3 Elevation Pre-limit and Final Limit Switch Adjustment (Alignment) Procedures.

1. Ensure the elevation assembly is stowed at zero degree elevation position.
2. Place ladder below elevation assembly access door.
3. Don safety harness prior to ascending ladder.
4. Ensure technician wearing safety harness is secured to pedestal prior to starting alignment procedure.

**NOTE**

You will be entering a confined space, non-permit required. This means the confined space does not contain any atmospheric hazards capable of causing death or serious physical harm.

5. Open elevation housing access door.
6. Establish communication with the RDA shelter.
7. At the RDA System Console (controlling channel Systems Console if Redundant), perform the following steps to verify the elevation position is 0.00 ± 0.06 degrees; enter:

| Step | Operator Action | System Response/Comments |
|---|---|---|
| a. | **RDASOT<Return>** | RDASOT Main Menu (Mode Selection Menu for Redundant sites) is displayed. |
| b. | **1<Return>**<br>Redundant sites only | To select FULL mode for this procedure at Redundant sites. |
| c. | **4<Return>** | To select Manual Control and Display Menu. |
| d. | **1<Return>** | To select Control Pedestal; PEDMCD Function Selection Menu is displayed. |
| e. | **3<Return>** | To select Pedestal Manual Control; Pedestal Manual Control Menu is displayed. |
| f. | **5<Return>** | To select Display Rate and Position; Elevation and azimuth positions are displayed. |

**NOTE**

If elevation position is not 0.00 ± 0.06 degrees, perform elevation encoder alignment in paragraph 6-6.17 .

8. Unstow the elevation assembly.

**NOTE**

When manually positioning the elevation assembly, make a turn and wait a few seconds for the readout from the RDA shelter technician.

9. In the elevation housing, engage elevation handwheel and very slowly position the elevation assembly to -1.4 ± 0.2 degrees elevation.

10. Set up the digital multimeter to read 10 Vdc.
11. Connect digital multimeter leads across A1A1S5 switch leads at A1A1TB1-2 and A1A1TB1-7. (See Figure 6-63).
12. Loosen the socket head screws holding the A1A1S5 cam actuator (-Prelim) using 1/4-inch Allen wrench.
13. While monitoring the digital multimeter, rotate the cam actuator in its slot until the voltage changes to its higher voltage strobe (4.75V).
14. Stop rotating the cam actuator and tighten the socket head screws.
15. Manually position elevation assembly to 0.00 degrees.
16. While monitoring the digital multimeter, slowly position the elevation assembly down until the voltage changes on multimeter.
17. Verify elevation position is -1.4 ± 0.2 degrees.

**NOTE**

Perform steps 12 through 17, if readjustment is required.

18. Engage elevation handwheel and very slowly position the elevation assembly to -2 ± 0.2 degrees elevation.
19. Connect the digital multimeter leads across A1A1S6 switch leads at A1A1TB1-2 and A1A1TB1-8. (See Figure 6-63).
20. Loosen the socket head screws holding the A1A1S6 cam actuator (-Final) (see Figure 6-63) using 1/4-inch Allen wrench.
21. While monitoring the digital multimeter, rotate the cam actuator in its slot until the voltage changes to its higher state (4.75V).
22. Stop rotating the cam activator and tighten the socket head screws.
23. Manually position elevation assembly to 0.00 degrees.
24. While monitoring the digital multimeter, slowly position the elevation assembly down until the voltage changes on the multimeter.
25. Verify elevation position is -2.0 ± 0.2 degrees.

**NOTE**

Perform steps 18 through 25, if readjustment is required.

26. Engage elevation handwheel and very slowly position the elevation assembly to +60.2 ± 0.2 degrees elevation.
27. Connect digital multimeter leads across A1A1S7 switch leads at A1A1TB1-3 and A1A1TB1-9.

**NOTE**

To gain access to A1A1S7 and A1A1S8, remove the elevation inspection cover at the top of the elevation housing using proper screwdriver and set it aside.

28. Remove the elevation inspection cover, use the proper screwdriver and set it aside.

29. Loosen the socket head screws holding the A1A1S7 cam actuator (+Prelim) using 1/4-inch Allen wrench.

30. While monitoring the digital multimeter, rotate the cam actuator in its slot until the voltage changes to its higher state (4.75V).

31. Stop rotating the cam actuator and tighten the socket head screws.

32. Manually position the elevation assembly to approximately 55 degrees elevation.

33. While monitoring the digital multimeter, slowly position the elevation assembly upward until the voltage changes on multimeter.

34. Verify elevation position is +60.2 ± 0.2 degrees elevation.

**NOTE**

Perform steps 26 through 34, if readjustment is required.

35. Engage elevation handwheel and very slowly position the elevation assembly to +64.0 ± 0.2 degrees.

36. Connect digital multimeter leads across A1A1S8 switch leads A1A1TB1-3 and A1A1TB1-10. (See Figure 6-63).

37. Loosen the socket head screws holding the A1A1S8 cam actuator (+Final) using a 1/4-inch Allen wrench.

38. While monitoring the digital multimeter, rotate the cam actuator in its slot until the voltage changes to its higher state (4.75V).

39. Stop rotating the cam actuator and tighten the socket head screws.

40. Manually position the elevation assembly to approximately 55 degrees elevation.

41. While monitoring the digital multimeter, slowly position the elevation assembly upward until the voltage changes on the multimeter.

42. Verify elevation position is +64.0 ± 0.2 degrees elevation.

**NOTE**

Perform steps 35 through 42, if readjustment is required.

43. Perform paragraph 6-6.16.3 , steps 2 through 6.

44. At the RDA System Console, enter **Ø<Return>** until RDASOT terminates.

45. Perform paragraph 6-6.16.3 , steps 8 and 12 through 15.e.

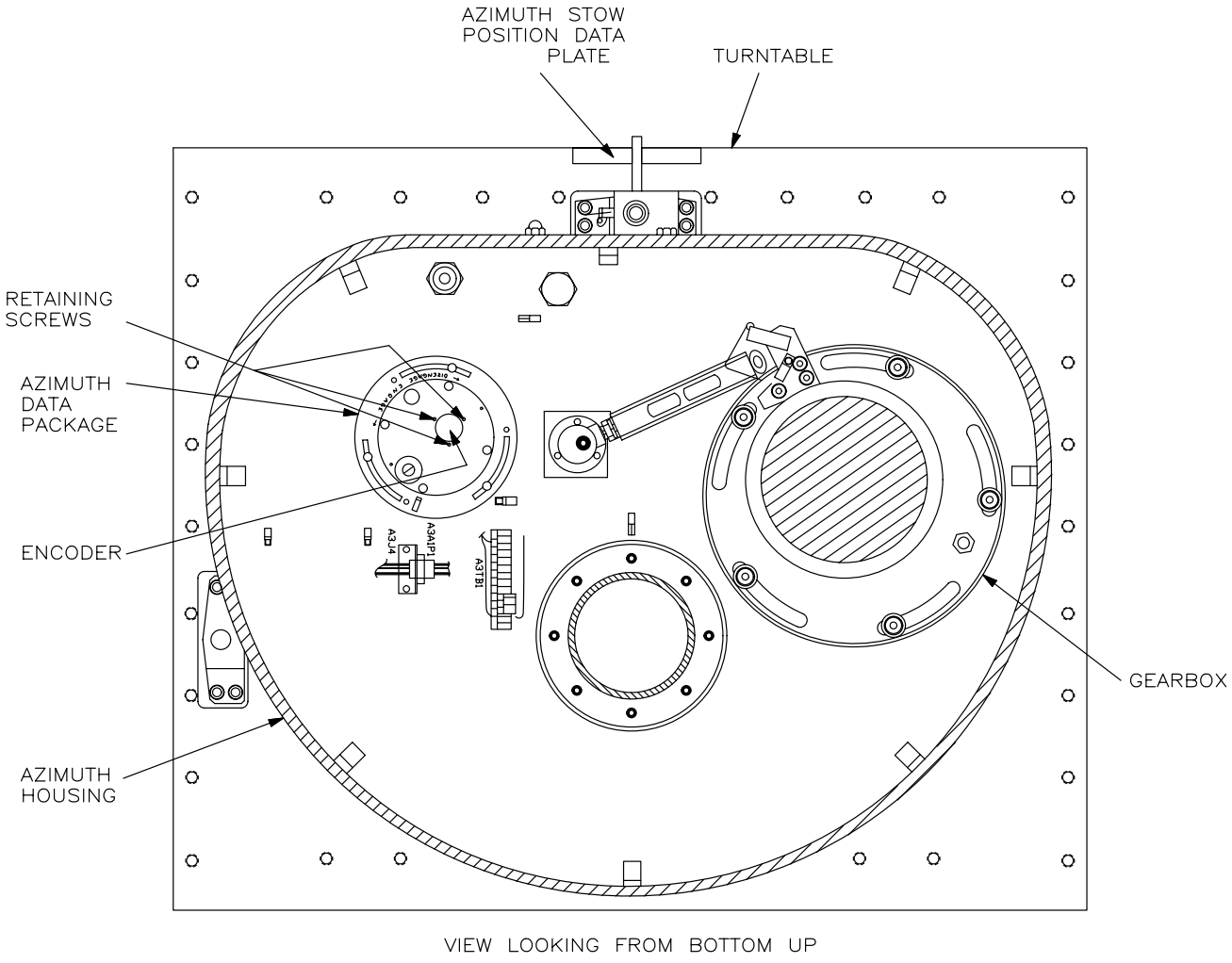


Figure 6-62. Azimuth Assembly UD2A3 (Sheet 1 of 2)

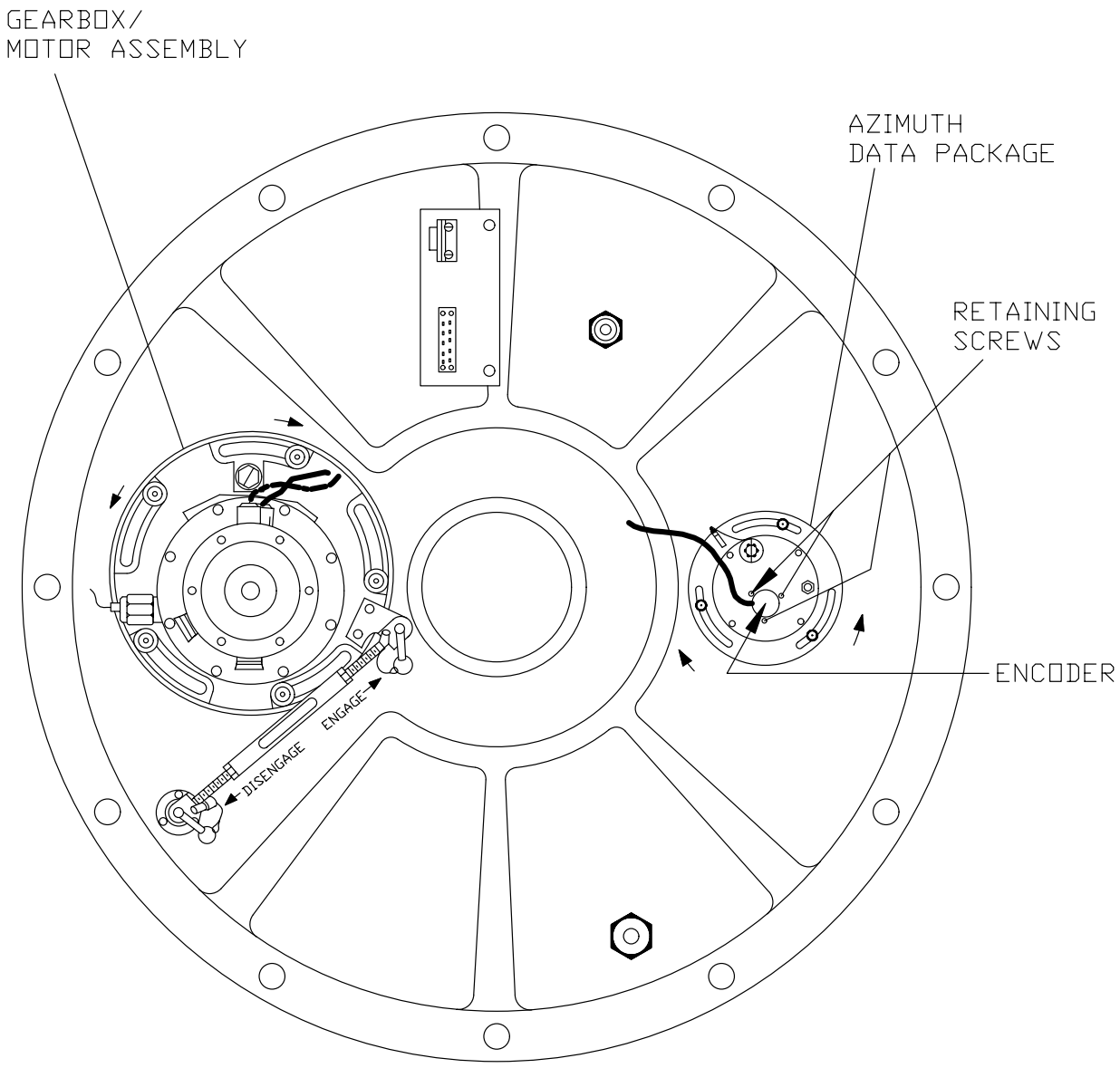


Figure 6-62. Azimuth Assembly UD2A3 (Sheet 2 of 2)

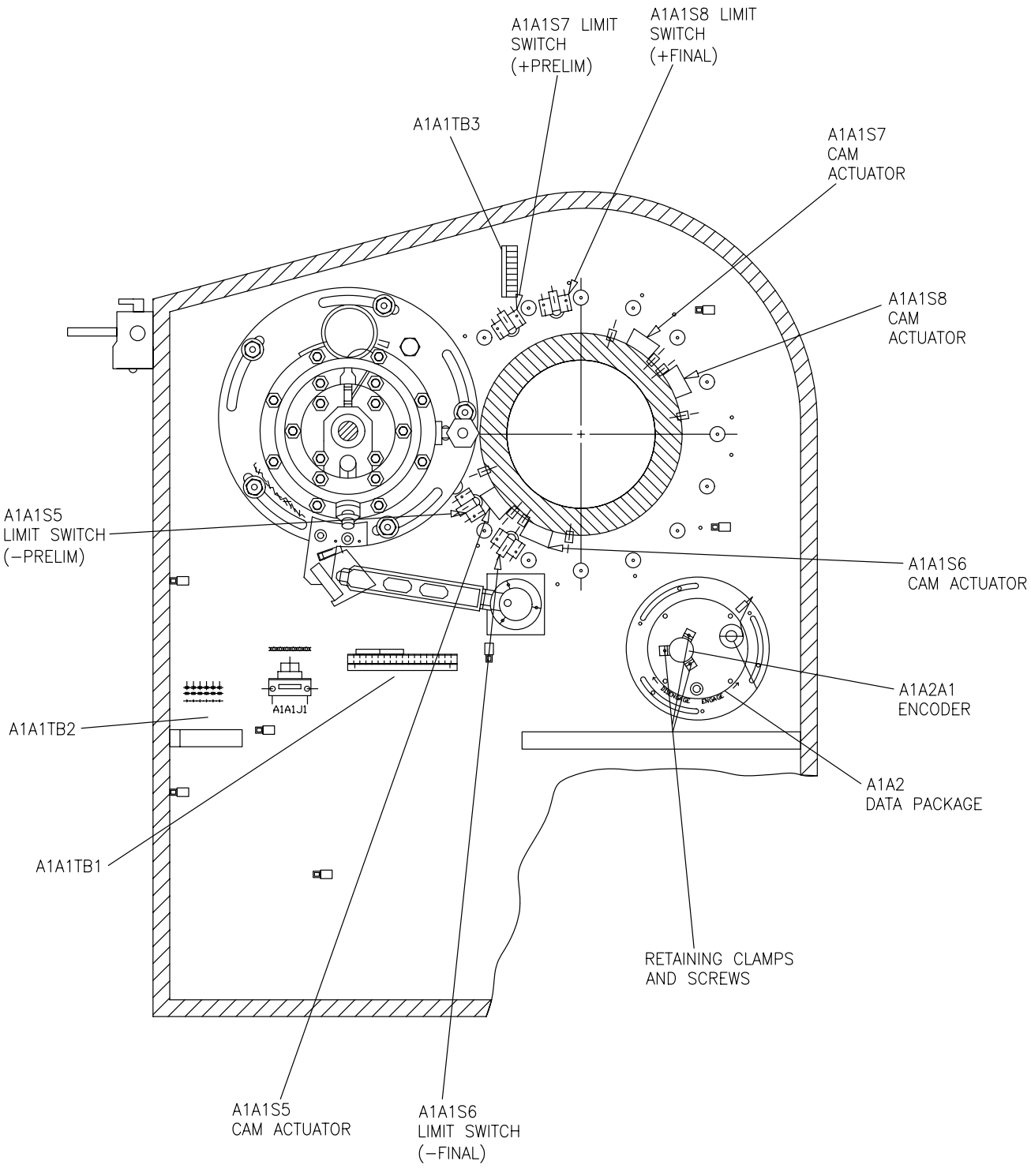


Figure 6-63. Elevation Switch UD2A1

## 6-6.19 CLOGGED FILTER INDICATOR ALIGNMENT.

This procedure provides instructions to clean or replace the air intake filters and adjust the Clogged Filter Indicators UD7A14, A15, A16, and A44* for Equipment Shelter Air Conditioners UD7AC1 and UD7AC2 and Transmitter UD3, respectively. Two radar technicians are required in RDA Equipment Shelter.

### 6-6.19.1 Equipment and Tools Required.

1. 5/16-inch nut driver
2. 11 × 17 paper (4 sheets)
3. Screwdriver, electronics-thin blade, 3-inch blade, 1/8-inch tip
4. Air Conditioner filters
5. Transmitter filters

### 6-6.19.2 Initial Conditions/Preliminary Setup.

1. Perform paragraph 6-6.15.3 , steps 1 and 2.
2. Ensure that the settings of Air Conditioner #1 Thermostat UD7S3 and Air Conditioner #2 Thermostat UD7S4 are 68°F for the Heater and 72°F for the Air Conditioner. (See Figure 6-64.)
3. Stop the blowers in both AC units by setting the system switch on both thermostats to the OFF position (see Figure 6-65).

### 6-6.19.3 Clogged Filter Alignment Procedure.

1. In RDA Equipment Shelter check and/or replace the air conditioner filters by performing the following steps at each of the two AC intake vents and the two economizer exhaust vents: (See Figure 6-66.)
   a. Remove the two screws at the left and right of each center input vent cover located on outside the shelter. The covers are hinged at the top so they will flip up and expose the filters.
   b. Remove and examine each filter. If intake surface of the filter is only slightly discolored, it can be re-used. Replace filters that are impregnated with dirt.
   c. Install filters and close vent covers by tightening the two vent cover screws.
2. At the Transmitter Air Intake System, (see Figure 6-67) check and/or replace air filter by performing the following steps:
   a. Deenergize the transmitter vent blowers by switching the HV POWER circuit breaker on the transmitter power panel at the top of UD3 to the **OFF** position. Turn the HV CB LOCKOFF keyswitch to the locked position.

- - - - -

* Redundant

b. Remove the 5/16-inch head retaining screws from the air duct filter cover.

c. Remove filters.

d. Install new or clean old filters; replace cover with retaining screws.

e. Turn HV CB LOCKOFF key switch to the unlocked position.

f. Engage Transmitter by placing HV POWER circuit breaker to **ON**.

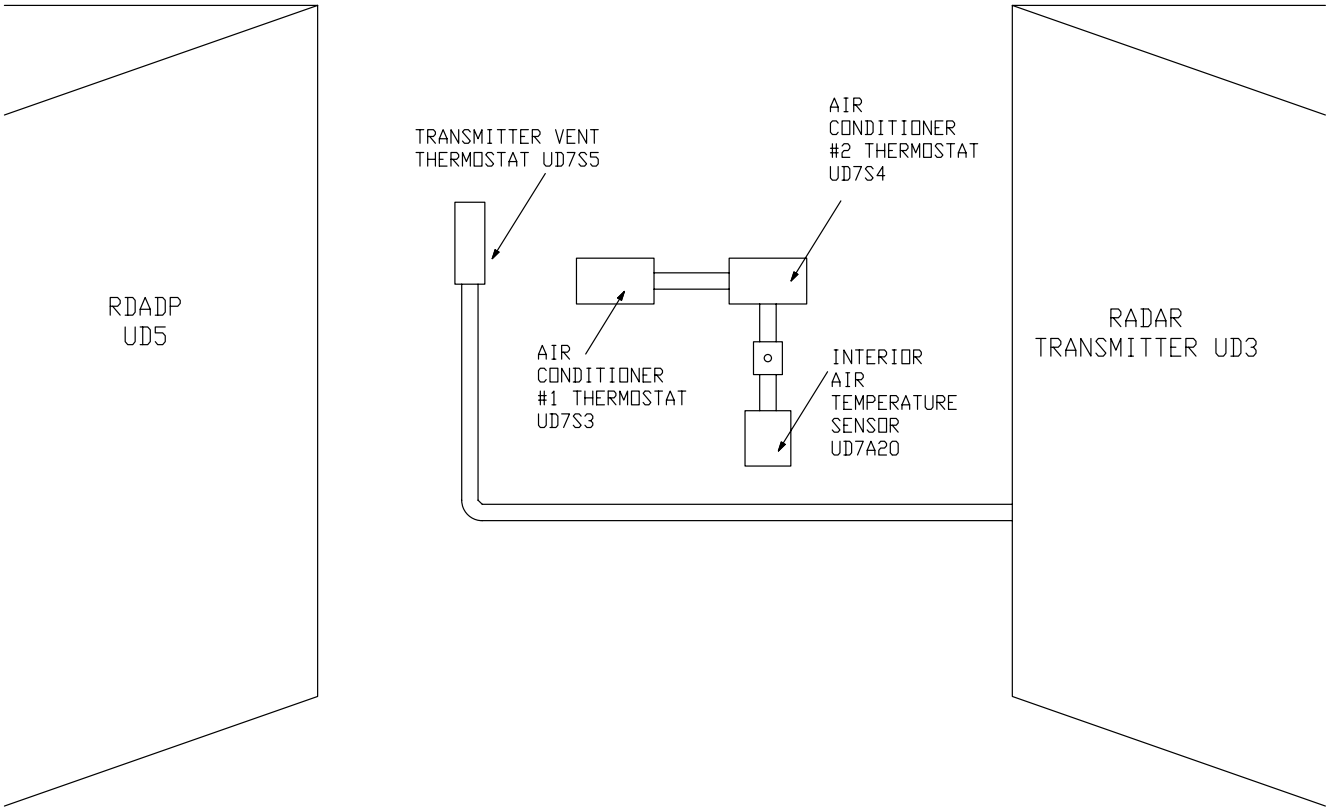


Figure 6-64. RDA Thermostats

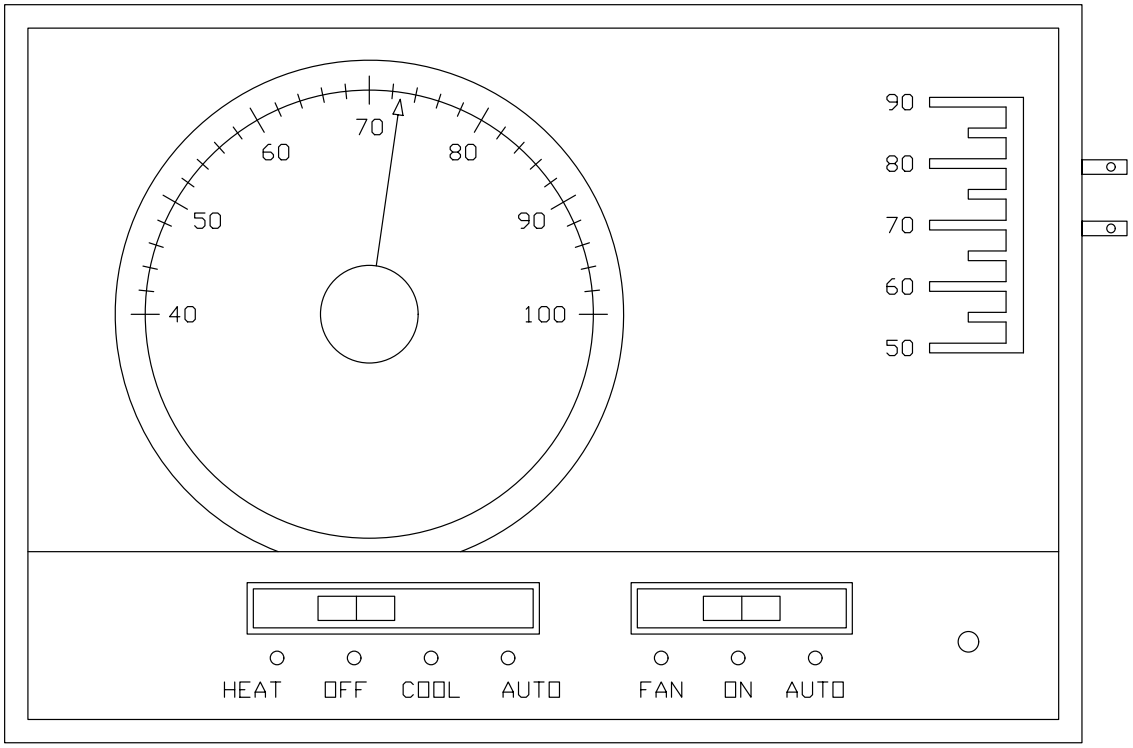


NX2196

Figure 6-65. Equipment Shelter A/C Thermostats UD7S3/UD7S4

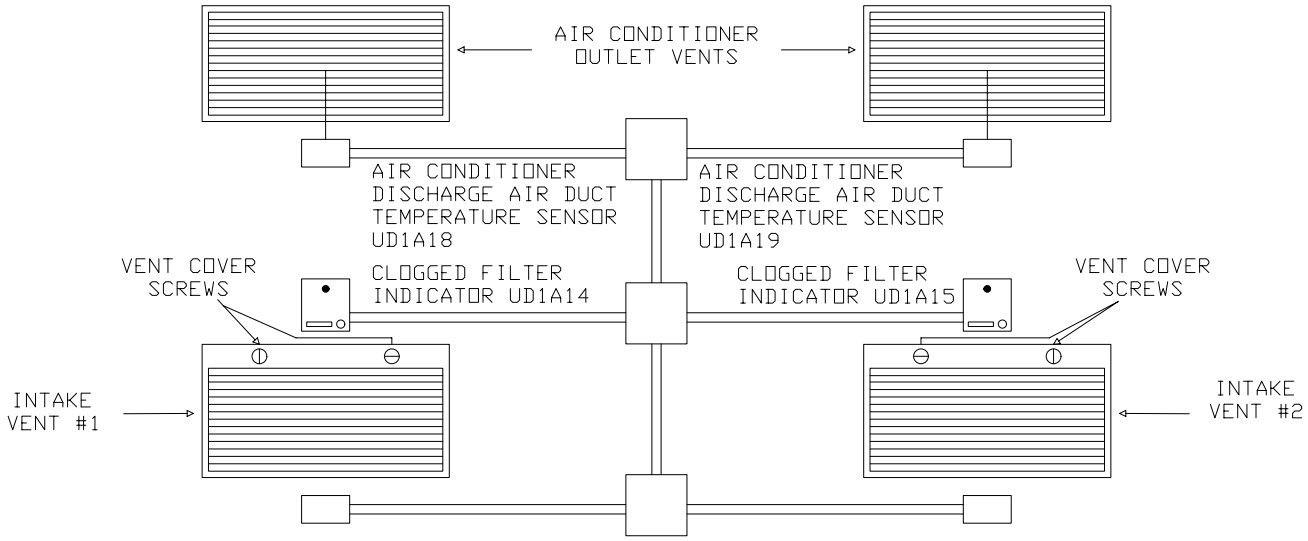


Figure 6-66. Interior AC Configuration

3. Adjust Air Conditioner Clogged Filter Indicators UD7A14 and UD7A15 (see Figure 6-66 and Figure 6-68) as follows:

   a. At Air Conditioner #1 Thermostat UD7S3, set the FAN switch to **ON** and the system switch to **AUTO**. This will energize the fan. (See Figure 6-65.)

   b. Verify that the blower is on by holding a sheet of paper in front of the UD7AC1 intake vent. The paper will adhere to the vent when the blower is on.

   c. Remove paper from vent.

   d. At Air Conditioner #1 Clogged Filter Indicator UD7A14, turn adjusting screw clockwise approximately five turns or to end of travel, but do not tighten.

   e. Verify that red CLOGGED FILTER indicator flag is not visible. If it is visible, turn the reset knob clockwise to reset flag.

   f. Cover two-thirds of the surface of the UD7AC1 intake vent with paper. The remaining uncovered one-third should be in the center of the vent.

   g. Turn the UD7A14 adjusting screw **counterclockwise** until the red CLOGGED FILTER indicator flag drops. (See Figure 6-68).

   h. Remove paper from vent and reset flag, if necessary.

   i. At AC#1 Thermostat UD7S3, set the FAN switch to **AUTO**.

   j. Repeat steps a through i for Clogged Filter Indicator UD7A15, substituting UD7S4 for UD7S3 and UD7AC2 for UD7AC1.

4. Adjust Transmitter Clogged Filter Indicators UD7A16 and UD7A44* (see Figure 6-67) as follows:

   a. Unlock the HIGH VOLTAGE POWER circuit breaker CB1 with the key and switch to the **ON** position to energize the blowers.

**NOTE**

Refer to NWS EHB 6-550 (Single Channel Systems) or NWS EHB 6-553 (Redundant Systems) Table 3-2 for Transmitter Vent Thermostat setting/verification.

   b. Record the current temperature setting at the Transmitter Vent Thermostat UD7S5/S35* _____ °F.

   c. Turn the UD7S5/S35* thermostat knob to minimum temperature. The transmitter internal intake vent louvers will close. (See Figure 6-69).

   d. Exit the shelter and locate the transmitter intake vent. (See Figure 6-67).

- - - - -

* Redundant

e. Repeat steps 3.d through 3.h, substituting UD7A16/A44* for UD7A14 and UD3/103* Transmitter for UD7AC1. See Figure 6-67 for the location of UD7A16/A44* Clogged Filter Indicator.

f. Restore temperature setting of UD7S5/S35* to the value recorded in step b.

5. Restoration

Perform paragraph 6-6.16.3 , steps 14 and 15.

- - - - -

* Redundant

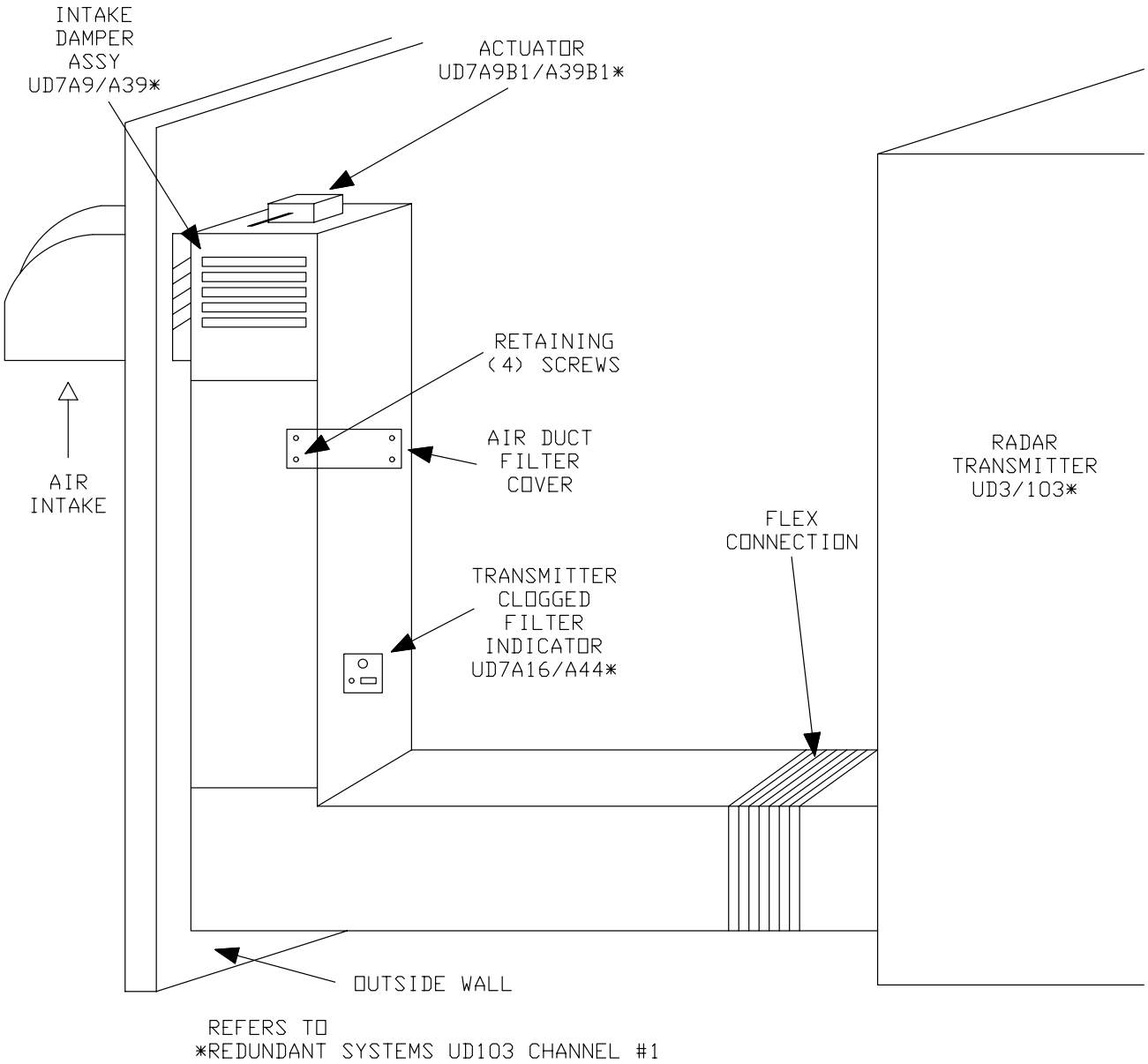


Figure 6-67. Transmitter Air Intake System

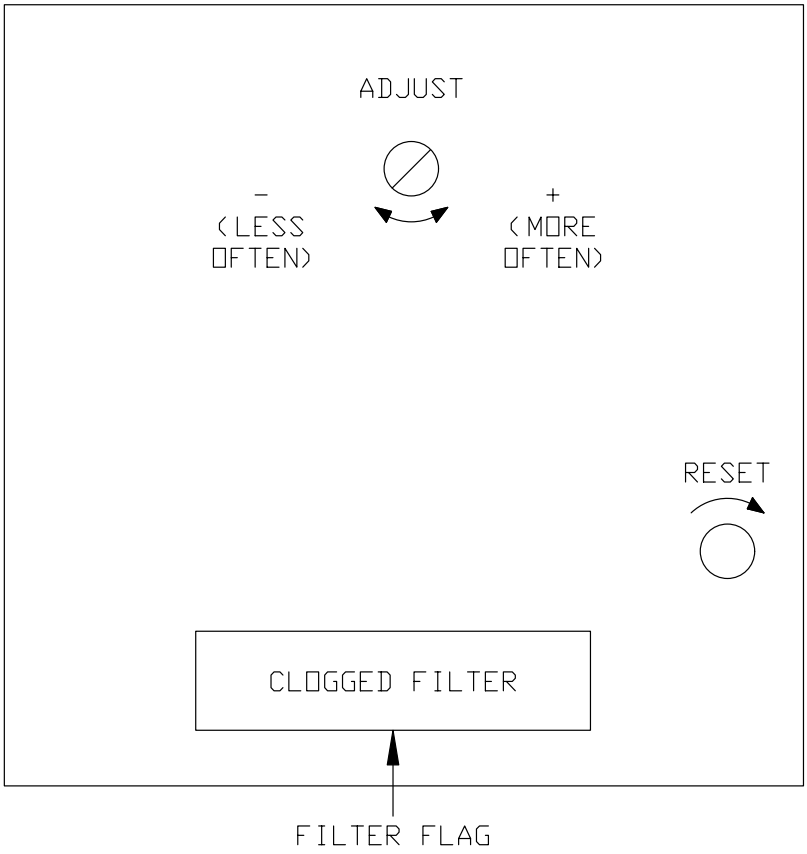


NX2199

Figure 6-68. Clogged Filter Indicator UD7A14/UD7A15/UD7A16/UD7A44

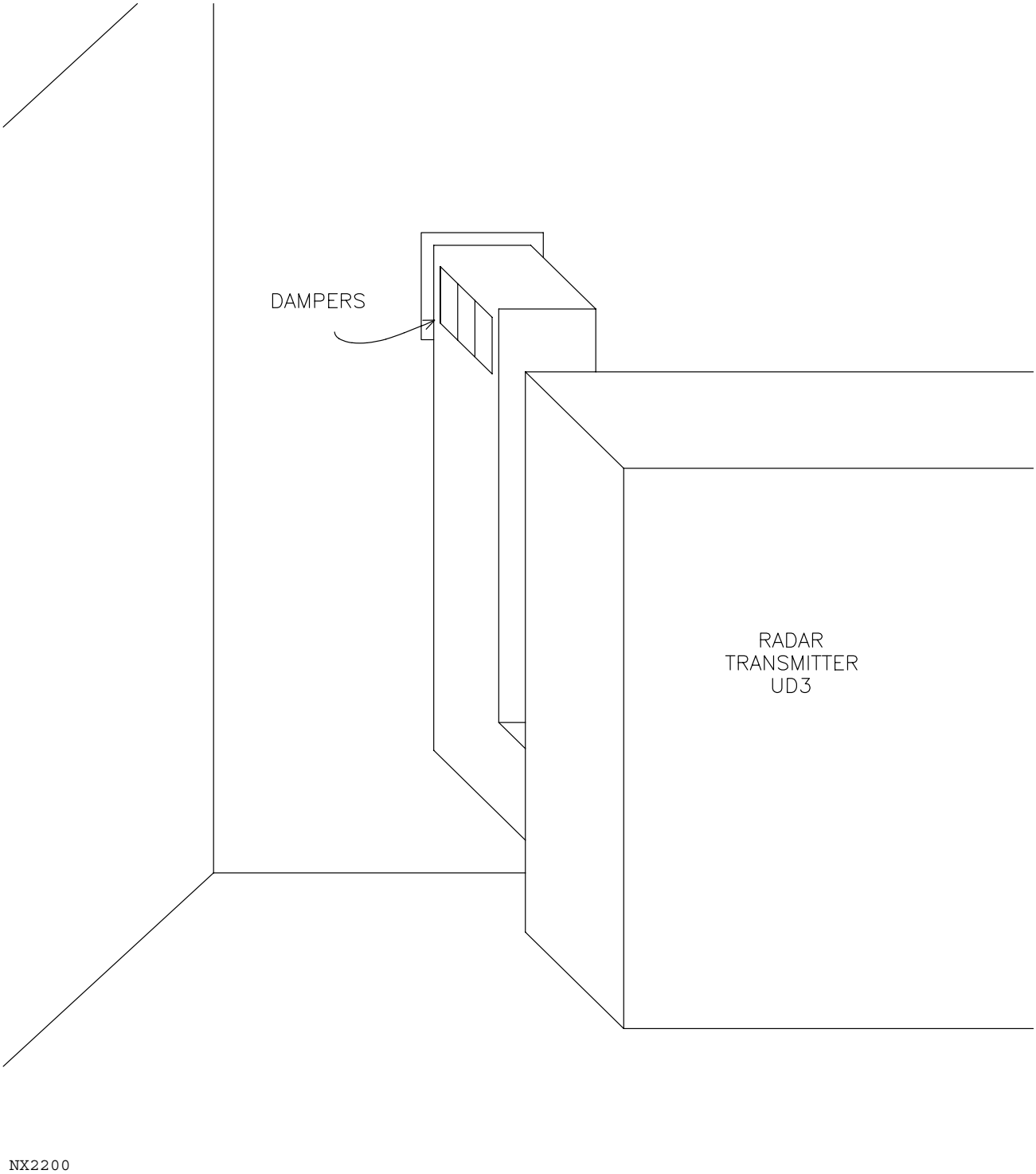


Figure 6-69. Transmitter Intake Vent Louvers Location

## 6-6.20 RECEIVER UD4 POWER SUPPLIES ADJUSTMENT.

This procedure requires a radar technician at Receiver Cabinet UD4 to:

1. Adjust single voltage Receiver Power Supplies PS2, PS4 through PS7, and PS9.
2. Adjust dual voltage Receiver Power Supplies PS1 and PS8.

### 6-6.20.1 Equipment and Tools Required.

1. Multimeter, Fluke Model 8060A or equivalent
2. Test Lead Kit Y8134/Y8140
3. Screwdriver, miniature, 3/32-inches

### 6-6.20.2 Initial Conditions/Preliminary Setup.

1. Verify that Receiver Cabinet UD4 circuit breaker (CB22) is on. The circuit breaker is located in Secondary Power Distribution Panel #1 UD7A3 (Channel 1/Single Channel) or Secondary Power Distribution Panel #2 UD7A29 (Channel 2).

**WARNING**

High voltages are present in or near this equipment when energized. Death on contact may result if personnel fail to observe proper safety procedures.

2. Open the front receiver cabinet door and locate the appropriate power supply. (See Figure 6-70.)
3. Verify that all red power ON indicators located on each power supply are illuminated. See Figure 6-71 for Power Supply PS1; Figure 6-72 for PS8; and Figure 6-73 for Power Supplies PS2, PS4 through PS7, and PS9.
4. For FAA Redundant Systems, the Remote Monitoring Subsystem (RMS) imposes a small additional load on the power supplies. This load will normally be negligible, however, power supply outputs should be verified with the RMS in the operational mode.

### 6-6.20.3 Receiver UD4 Power Supplies Adjustment Procedure.

1. The adjustment procedure for the single-voltage Receiver Power Supplies PS2, PS4 through PS7, and PS9 is outlined below. Take special care not to short the multimeter test leads to the power supply cases because this could damage the power supply. After performing steps a through e for PS2, repeat for PS4 through PS7 and PS9. See Figure 6-73.
   a. Ensure that the current limit adjustment CL is turned fully **clockwise**.
   b. Insert the negative (-) test lead into the negative (-) test jack on the power supply.

c. Insert the positive (+) test lead into the positive (+) test jack on the power supply.

d. Rotate the voltage adjustment (VA) screw to obtain a meter indication corresponding to the specified voltage value for the power supplies listed below.

| Power Supply | Rating, Vdc |
|---|---|
| PS2 | +5.0 ± 0.10 |
| PS4* | +9.0 ± 0.25 |
| PS5 | +5.0 ± 0.10 |
| PS6 | +9.0 ± 0.25 |
| PS7* | +5.2 ± 0.10 |
| PS9 | +5.0 ± 0.10 |

* The outputs of PS7 and PS4 are used as negative voltages as noted on Figure FO7-13, sheet 2.

e. Remove multimeter test leads.

2. The adjustment procedure for ± 18 Vdc dual voltage Receiver Power Supply PS1 is outlined below. Take special care not to short the multimeter test leads to the power supply cases because this could damage the power supply. See Figure 6-71.

a. Positive (+) 18 Vdc voltage adjustment.

(1) Insert the negative (-) multimeter lead into the common (Ø) test (middle) jack.

(2) Insert the positive (+) multimeter lead into the positive test (left) jack.

(3) Using the screwdriver, rotate the +VA adjustment screw to obtain a meter indication of +18.0 ± 0.50 Vdc.

(4) Remove the test leads.

b. Negative -18.0 Vdc voltage adjustment.

(1) Insert the negative (-) multimeter lead into the common (Ø) test (middle) jack.

(2) Insert the positive (+) multimeter lead into the negative (-) test (right) jack.

(3) Rotate the -VA adjustment screw to a meter indication of -18 ±0.50 Vdc.

(4) Remove voltmeter test leads.

3. The adjustment procedures for the ± 15 Vdc dual voltage Receiver Power Supply PS8 is outlined in the following steps. See Figure 6-72.

a. Positive +15 Vdc voltage adjustment

(1) Insert the negative (-) multimeter test lead into the +R test jack.

(2) Insert the positive (+) multimeter test lead into the + Ø test jack.

(3) Using a screwdriver/adjustment tool, rotate the +VA adjustment screw to obtain a meter indication of +15 ± 0.10 Vdc.

(4) Remove the multimeter test leads.

b. Negative -15 Vdc voltage adjustment.

(1) Insert the positive multimeter lead into the - Ø test jack.

(2) Insert the negative multimeter test lead into the -R test jack.

(3) Rotate the -VA adjustment screw to obtain a -15 ± 0.10 Vdc reading on the multimeter.

(4) Remove the multimeter test leads.

4. Close the cabinet door and return to operation.

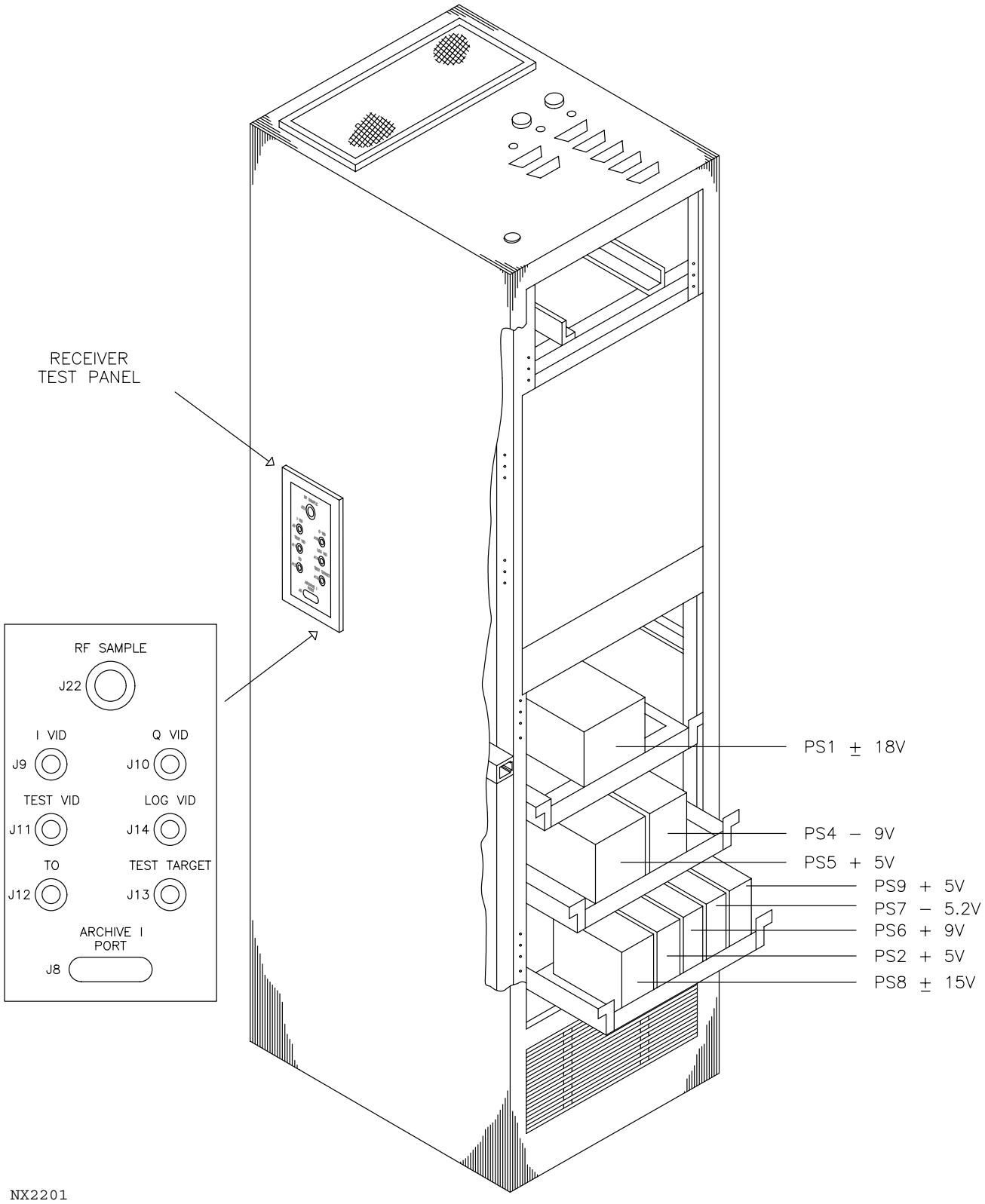


Figure 6-70. Receiver Cabinet UD4

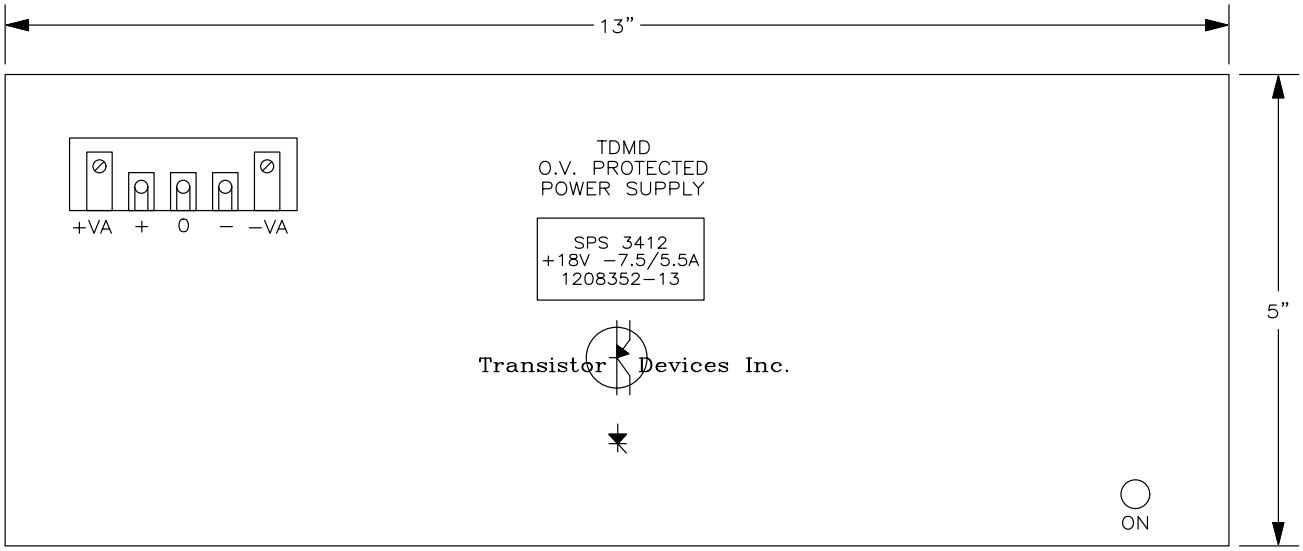


NX2202

Figure 6-71. ±18 Vdc Receiver Power Supply Test Adjustment Points, UD4PS1

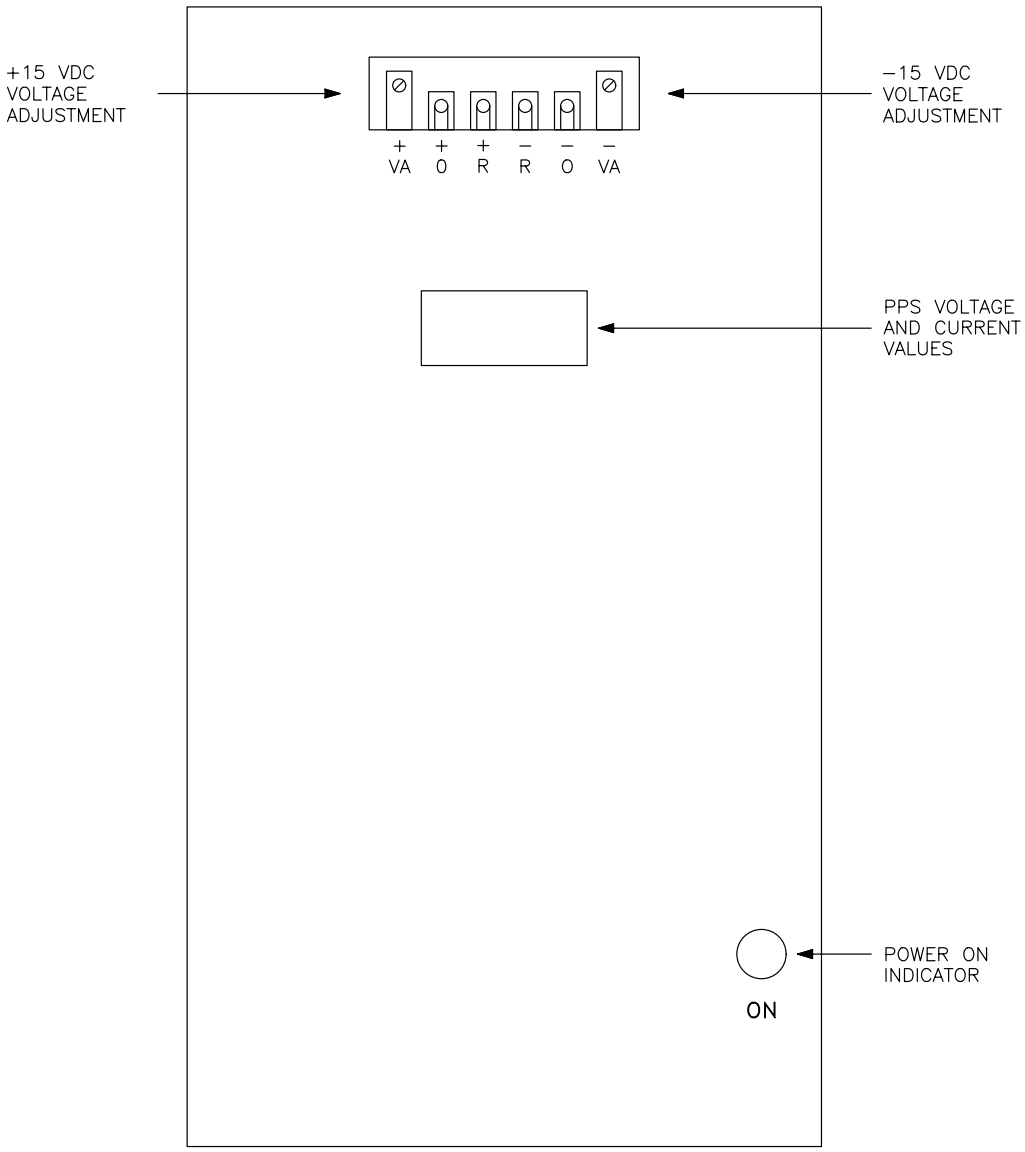


Figure 6-72. ±15 Vdc Receiver Power Supply Test Adjustment Points, UD4PS8

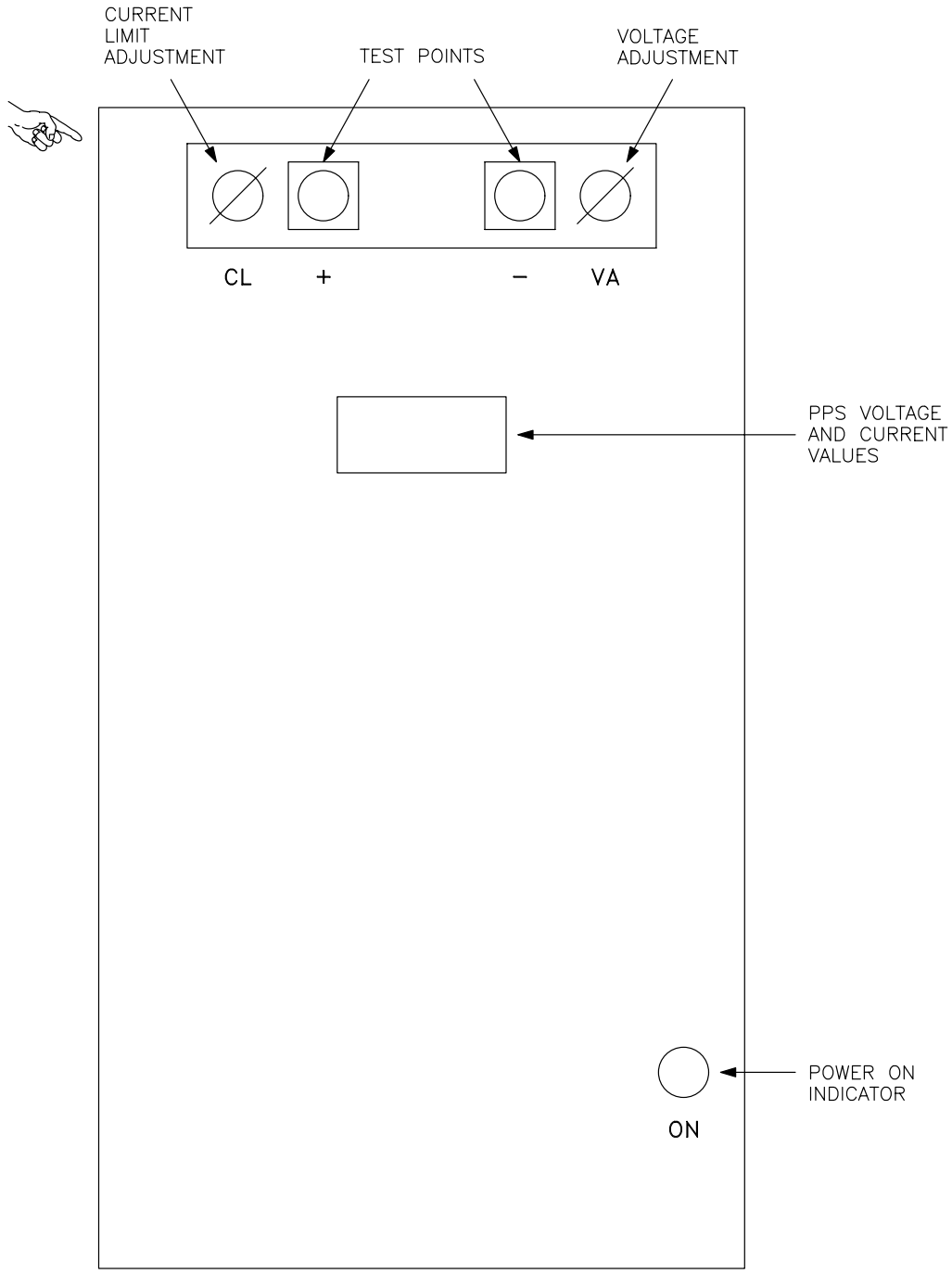


Figure 6-73. 5, 9, and 5.2 Vdc Receiver and RDADP Power Supply Test and Adjustment Points, UD4PS2, PS4 through PS7, and PS9

## 6-6.21 RDA DATA PROCESSOR UD5 POWER SUPPLIES ADJUSTMENT.

This procedure provides instructions to the technician at the RDA Data Processor UD5 to:

1. Adjust single voltage Power Supplies PS1 and PS3.
2. Adjust single voltage Power Supply PS4.
3. Adjust dual voltage Power Supply PS2.

### 6-6.21.1 Equipment and Tools Required.

1. Multimeter, Fluke Model 8060A, or equivalent
2. Kit, Test Lead Y8134/Y8140
3. Screwdriver, miniature, 3/32-inch

### 6-6.21.2 Initial Conditions/Preliminary Setup.

1. Verify that RDASC and Signal Processor circuit breakers are on. Refer to Table 6-15, steps 8 and 12, for the correct Secondary Power Distribution Panel and circuit breaker numbers.

**WARNING**

High voltages are present in or near this equipment when energized. Death on contact may result if personnel fail to observe proper safety procedures.

2. Open the rear left RDADP cabinet door and locate the appropriate power supply. See Figure 4-2 and Figure 4-3 for power supply location.
3. Verify that the red power ON indicator for PS2 and PS3 are illuminated.
4. For FAA Redundant Systems, the Remote Monitoring Subsystem (RMS) imposes a small additional load on the power supplies. This load will normally be negligible, however, power supply outputs should be verified with the RMS in the operational mode.

### 6-6.21.3 RDA Data Processor UD5 Power Supplies Adjustment Procedure.

1. The adjustment procedure for PS1 (+28 Vdc) is outlined in the following steps.
   a. Clip the negative (-) test lead to the -V terminal lug.
   b. Clip the positive (+) test lead to the +V terminal lug.
   c. Adjust the ADJ adjustment screw for +28 ± 0.30 Vdc.
   d. Remove the test leads.

2. The adjustment procedures for PS4 (+5 Vdc) are outlined in the following steps. PS4 does not have a power ON indicator.

**NOTE**

Because PS4 supplies high current, there will be a voltage drop between the supply and the load. While making adjustments, monitor the voltage at the Hard Wired Signal Processor and the Programmable Signal Processor Bus Bars.

**CAUTION**

The multimeter leads must not come into contact with each other or the chassis while making voltage measurements.

   a. Using a clip lead, connect the negative test lead to a ground bus bar screw W4 of the Programmable Signal Processor.

   b. Using another clip lead, connect the positive test lead to a positive (+) bus bar screw W3 of the Programmable Signal Processor.

   c. Using the screwdriver, rotate the VDC ADJ adjustment screw to obtain a meter indication of +5 (+0.1/-0.0 Vdc).

   d. Remove the test leads.

3. The adjustment procedures for the dual voltage RDADP ±15 Vdc Power Supply PS2 are outlined in the following steps.

   a. Positive (+) voltage adjustment.

      (1) Insert the negative (-) multimeter lead into the +R test jack.

      (2) Insert the positive (+) multimeter lead into the +Ø test jack.

      (3) Using the screwdriver/adjustment tool, rotate the +VA adjustment screw to obtain a meter indication of +15 ± 0.10 Vdc.

      (4) Remove the multimeter test leads.

   b. Negative (-) voltage adjustment.

      (1) Insert the positive multimeter lead into the negative (-Ø) test jack.

      (2) Insert the negative multimeter lead into the -R test jack.

      (3) Rotate the -VA adjustment screw to obtain a -15 ± 0.10 Vdc reading on the multimeter.

      (4) Remove multimeter test leads.

4. The adjustment procedures for PS3 (+5 Vdc) are outlined in the following steps:

a. Insert the negative (-) multimeter lead in the (-) test point.

b. Insert the positive (+) multimeter lead into the (+) test point.

c. Adjust the VA adjustment screw for 5.0 ± 0.1 Vdc.

d. Remove the test leads.

e. Close the cabinet doors and return to normal operation.

6-6.22 HP436A POWER METER CALIBRATION.

This two-part procedure provides instructions to calibrate Power Meter HP436A. Part 1 covers the calibration of the power meter when used with -30 dBm to 20 dBm power sensor (HP8481A). Part 2 covers the calibration of the power meter when the -70 dBm to -20 dBm high sensitivity, low power sensor (HP8484A) is used. The procedure requires one technician at the RDA.

6-6.22.1 Equipment and Tools Required.

1. Power Meter, HP436A
2. Power Sensor, -30 dBm to +20 dBm, HP8481A
3. Power Sensor, -70 dBm to -20 dBm, HP8484A
4. Attenuator, 30 dB, coaxial, N-type connector (supplied with HP8484A)
5. Screwdriver, miniature, 3/32-inch
6. Power Sensor Cable, 5-foot (HP11730A) or 20-foot (HP11730C) Meter Power Cable

6-6.22.2 Initial Conditions/Preliminary Setup.

1. Ensure the power meter LINE power pushbutton is off (out), MODE select has WATT pushbutton selected (in), and RANGE HOLD not selected (out).
2. Connect line power cord to power meter and 115 Vac receptacle.

**CAUTION**

To prevent damage to the power sensor during calibration and use, do not exceed manufacturer's specifications as stated in notes and warnings included in Part II of the Equipment Manual.

6-6.22.3 HP436A Power Meter Calibration Procedure - Part 1.

1. Connect Power Sensor HP8481A to SENSOR input jack of power meter via the power sensor input cable.
2. Press LINE power button to ON (in) position. Wait approximately 10 minutes while meter warms up.

a. Press and hold SENSOR ZERO button until display reads 00.00 and ZERO indicator is illuminated.

b. Release SENSOR ZERO button and wait approximately 4 seconds for ZERO indicator to go off.

3. Press dBm MODE button to ON (in) position and observe the following indications:

a. UNDER RANGE indicator illuminated.

b. dBm indicator illuminated.

c. Display reads -3. (Indicates the -30 to +20 dBm sensor is attached).

4. Observe calibration curve stamped on body of power sensor.

5. Set CAL FACTOR % rotary switch on power meter to the value corresponding to 50 MHz per the calibration curve on the power sensor. (This value will most likely be close to 100%.)

6. Press WATT MODE button to ON (in) position and verify the μW indicator is illuminated.

7. Ensure that the POWER REF ON pushbutton is in the OFF (out) position.

8. Connect the power input (N-type connector) end of the power sensor directly to the OUTPUT jack on the front of the power meter.

9. Press and hold the SENSOR ZERO button until the digital readout stabilizes and the following indications are observed:

a. ZERO indicator is illuminated.

10. Release SENSOR ZERO button and wait approximately 4 seconds for ZERO indicator to go off.

11. Press POWER REF ON pushbutton to ON (in) position. Display should read 1.00 and the mW indicator will be lit.

12. If necessary, adjust meter to read 1.00 mW by turning the CAL ADJ screw with a jeweler's flat-blade screwdriver.

13. Press POWER REF ON pushbutton to the OFF (out) position and remove power sensor from the OUTPUT jack.

14. Readjust the CAL FACTOR % rotary switch to a value corresponding to the approximate frequency of the signal to be measured. Meter is now calibrated.

6-6.22.4 HP436A Power Meter Calibration Procedure - Part 2.

1. On the HP436A power meter, ensure the LINE power pushbutton is OFF (out).

2. Connect Power Sensor HP8484A to SENSOR input jack of power meter via the 5-foot power sensor cable (HP11730A) or 20-foot power sensor cable (HP11730C) as required.

3. Connect the 30 dB, 50 MHz reference attenuator (HP11708A) supplied with sensor to power sensor HP8484A.

**CAUTION**

When calibrating the HP8484A power sensor, make absolutely certain that the 30 dB reference attenuator (HP11708A) supplied with the sensor is installed between POWER REF output and sensor. The power sensor (HP8484A) will be destroyed if connected directly to POWER REF OUTPUT jack. Do not substitute another 30 dB attenuator for this calibration step. Do not use HP11708A 30 dB 50 MHz reference attenuator for measuring WSR-88D levels as it will induce serious errors at radar frequencies. It is intended for calibration of HP8484A only. When using this power sensor, do not exceed -20 dB average power or the sensor will be destroyed.

4. Press LINE power button to ON (in) position and allow instrument to warm up for 30 minutes. One-hour stabilization time is required if ambient temperature varies ± 10° C from the previous location.

5. Press dBm MODE button to ON (in) position and observe the following indications:

   a. UNDER RANGE indicator is illuminated.

   b. dBm indicator is illuminated.

   c. Display reads -7. (Indicates the -70 to -20 dBm sensor is attached).

6. Set CAL FACTOR % rotary switch on power meter to the value corresponding to 50 MHz per the calibration curve on the power sensor (should be close to 100%).

7. Press WATT MODE button to ON (in) position and verify the nW indicator is illuminated.

8. Ensure that POWER REF ON pushbutton is in the OFF (out) position.

**CAUTION**

When calibrating the HP8484A power sensor, make absolutely certain that the 30 dB reference attenuator (HP11708A) supplied with the sensor is installed between POWER REF output and sensor. The power sensor (HP8484A) will be destroyed if connected directly to POWER REF OUTPUT jack.

9. Connect the reference attenuator end of the cable-sensor-attenuator combination to the POWER REF OUTPUT jack on the front of the power meter.

10. Press and hold the SENSOR ZERO button until the digital readout stabilizes and the following indications are observed:

    a. Display reads 0.0 ± 0.4

    b. ZERO indicator is illuminated.

11. Release the SENSOR ZERO button and verify ZERO indicator remains illuminated for approximately 4 seconds and display reads 0.00 ± 0.2 nanoW when indicator goes off.

12. Press POWER REF ON pushbutton to ON (in) position. Display should read 1.000 and the μW indicator will be lit.

13. If necessary, adjust meter to read 1.000 μW by turning the CAL ADJ screw with a jeweler's flat-blade screwdriver. (Pointer on auxiliary meter should be aligned between last two marks.)

14. Press POWER REF ON pushbutton to the OFF (out) position and remove power sensor and attenuator from POWER REF OUTPUT jack.

15. Remove reference attenuator from power head and readjust the CAL FACTOR % rotary switch to a value corresponding to the frequency of the signal being measured. Meter is now calibrated.

**NOTES**

Do not use reference attenuator for measurements other than calibration of HP8484A power sensor.

Do not exceed -20 dBm average power into sensor.

## 6-6.23 RF FREQUENCY GENERATOR CHECKOUT

This procedure provides a check of the operation and accuracy of RF Frequency Generator UD4A1. One technician is required at the Receiver Cabinet UD4 in the RDA shelter. If the operation and accuracy criterion are not met, perform fault isolation.

### 6-6.23.1 Equipment and Tools Required.

1. Power Meter HP436A

2. Power Sensor HP8481A

3. Attenuator, coaxial, 10dB, type N connector - HP8491 series

4. Attenuator, coaxial, 30dB, type N connector - HP8491 series

5. RF Frequency Counter HP5350
6. Adapter, type N male-to-SMA female - Pomona 4299
7. Adapter, type N female-to-SMA male - Pomona 4298
8. Adapter, SMA female-to-SMA female - Pomona 4283
9. Adapter, right angle SMA female-to-SMA male - Pomona 4282
10. BNC male-to-SMA female - Pomona 4289
11. Test cable, RF coaxial (RG-142B), SMA male-to-SMA male connector, 10 feet
12. Screwdriver, flat-tip, 1/4-inch

6-6.23.2 Initial Conditions/Preliminary Setup.

1. Perform paragraph 6-6.15.3 , steps 1 through 3.d.
2. Configure Power Meter HP436A with Power Sensor HP8481A and calibrate according to paragraph 6-6.22 .
3. Configure Frequency Counter HP5350 with a 10-foot SMA male-to-SMA male test cable or equivalent. Using the appropriate adapter, connect a 30 dB coaxial attenuator between the RF input to the counter and the test cable. The attenuator will prevent damaging the counter input circuits.
4. Use the RDASOT TESTSIG program to disable the RF gate going to the Frequency Generator UD4A1 by performing the following steps at the RDA System Console; at the * prompt enter:

| Step | Operator Action | System Response/Comments |
|---|---|---|
| a. | **RDASOT<Return>** | RDASOT Main Menu (Mode Selection Menu for Redundant sites) is displayed. |
| b. | ***1 or 2*** **<Return>** Redundant sites only | Either FULL or LIMITED mode may be used for this procedure at Redundant sites |
| c. | **4<Return>** | To select Manual Control and Display Menu. |
| d. | **2<Return>** | To select Control RCVR/Signal Proc; the TESTSIG Source Selection Menu will be displayed. |
| e. | **5<Return>** | To select CW Source; CW Source Control Menu is displayed. |
| f. | **2<Return>** only if RCVR Injection Point is not Cabinet | To toggle RCVR Injection Point to Cabinet; CW Source Control Menu is again displayed. |

| Step | Operator Action | System Response/Comments |
|---|---|---|
| g. | **6<Return>** only if Receiver Protector is not Normal | To toggle Receiver Protector to Normal; CW Source Control Menu is again displayed. |
| h. | **7<Return>** only if Interference Suppression is not Disabled. | To toggle Interference Suppression to **Disabled**; CW Source Control Menu is again displayed. |
| i. | **4<Return>** | To select Test Attenuation. Enter the new RF Test Attenuation Value (0...103 dB) is displayed. |
| j. | **1Ø3<Return>** | To select 103 dB attenuation; CW Source Control Menu is again displayed. |
| k. | **1<Return>** | To select Inject Signal. |

6-6.23.3 RF Frequency Generator Checkout Procedure.

**NOTE**

A warm up period of 2 hours minimum from a cold start is required before this procedure may be accomplished. Inclusion of premature measurements in adaptation data will result in reflectivity errors.

1. Verify that the center frequency of Preselect Bandpass Filter UD4A4 matches the most current center frequency ($F_C$) entry of Table 6-24, or record $F_C$ in Table 6-24 as follows:

**NOTE**

The Preselect Bandpass Filter UD4A4 determines the bandpass and center frequency of the radar receiver RF stage. The center frequency of UD4A4 is also the transmitted carrier frequency and, therefore, is site dependent (UD4A4 can be different for every site). Since the value of the transmitted carrier frequency is needed to perform the procedures in paragraphs 6-6.23, 6-6.24, and 6-6.25, it is represented by the symbol $F_C$ for convenience.

a. Open rear door of Radar Receiver UD4.

b. Using 1/4-inch flat-tip screwdriver, loosen screws that secure hinged inner component panel door.

c. Open inner component panel door and latch open with the door stay at the top, outside of the door.

d. Locate Preselect Bandpass Filter UD4A4 and note the value of the center frequency in MHz printed on the component case.

e. Check Table 6-24 and verify that the latest entry of $F_C$ is the same as noted in step d. If the $F_C$ values are different or, if no entries have been made in Table 6-24, record the center frequency printed on UD4A4 in the $F_C$ column with the current date.

Table 6-24. Center Frequency

| $F_C$ in MHz | Date | | |
|---|---|---|---|
| | Month | Day | Year |
| | | | |
| | | | |
| | | | |

2. Measure the power and frequency of Klystron RF Drive signal by performing the following steps:

   a. Disconnect cable W129 from J1 of the RF Frequency Generator UD4A1.

   b. Connect the power sensor to J1 using an SMA male-to-N-type female adapter. The power should be 13 ▫ 2.0 dBm. (Remember to set CAL FACTOR % on power meter to value corresponding to frequency of signal being measured.)

   c. Disconnect power sensor from J1 and connect the frequency counter cable. The frequency should be $F_C$ ▫ 0.0005%.

   d. Disconnect frequency counter cable and reconnect W129 to J1.

3. Measure the power and frequency of the COHO signal as follows:

   a. At I/Q Phase Detector UD4A10, disconnect P2 of cable W222 from J2. (See Figure 6-74).

   b. Connect Power Sensor HP8481A to P2 via an SMA female-to-N-type female adapter and a 10 dB coaxial attenuator. (Remember to set CAL FACTOR % on power meter to value corresponding to frequency of signal being measured.)

   c. Verify that the power out of P2 is 27 ▫ 1.5 dBm. Be sure to correct the meter reading with the calibrated value of the attenuator. This is the new value of Adaptation data parameter R38 COHO power.

   d. Disconnect the power sensor from P2 and connect the frequency counter input cable. Use SMA female-to-SMA female adapter.

   e. Verify that the frequency is 57.5491 MHz ▫ 277 Hz.

**NOTE**

The COHO frequency is the same as the IF frequency of the receiver.

f. Disconnect the frequency counter and reconnect P2 of W222 to J2 of UD4A10.

g. Disconnect the 10 dB coaxial attenuator from the power sensor.

4. Measure the power and frequency of the STALO signal as follows:

**NOTE**

The STALO signal is used to convert the RF return to the IF frequency. The STALO frequency is 57.5491 MHz below the transmitted frequency whose value is represented by $F_C$ in MHz, thus the STALO frequency is $F_C$ - 57.5491 MHz.

a. Locate Mixer-Preamplifier UD4A5 and disconnect P2 of cable W115 from J2.

**CAUTION**

Do not permit the semi-rigid coax to become deformed or bent out of shape.

b. Measure and record the power and frequency at P2 of W115 in the same manner as performed in step 2 using appropriate adapters. The 10 dB attenuator is not needed.

c. Measure the STALO power. It should be between 14 dBm and 17 dBm and the frequency $F_C$ - 57.5491 MHz ± 0.0005%. The measured STALO power is the new value of Adaptation data parameter R39.

d. Disconnect the frequency counter and reconnect P2 of W115 to J2 of UD4A5.

5. Measure the power of the RF CW test signal by performing the following steps:

a. Disconnect the semi-rigid cable W114 from J3 of UD4Al.

b. Connect the power sensor to 4A1J3 through a 10 dB coaxial attenuator using appropriate adapters. (Remember to set the CAL FACTOR % on power meter to value corresponding to frequency of signal being measured).

c. Verify that the power output is 23 ± 2.0 dBm. Be sure to correct the meter reading with the calibrated value of the attenuator.

6. Perform the path loss measurement for R34 and R59 per Table 6-41 and paragraph 6-6.31 and correct current adaptation data per paragraph 6-6.29. This procedure corrects the CW Test Path.

7. Perform the Data Collection procedure of paragraph 6-6.28.1.4.2.

8. Perform the RF Drive Test Path error calculation of paragraph 6-6.28.2.1.4 step 35, then proceed to paragraph 6-6.28.2.1.4 step 42. This procedure corrects the RF Drive Test Path if necessary.

9. Enter the new values of adaptation data parameters R38 and R39 measured in steps 3 and 4 above per paragraph 6-6.29 .

10. Secure all test equipment and restore the RDA to normal conditions.

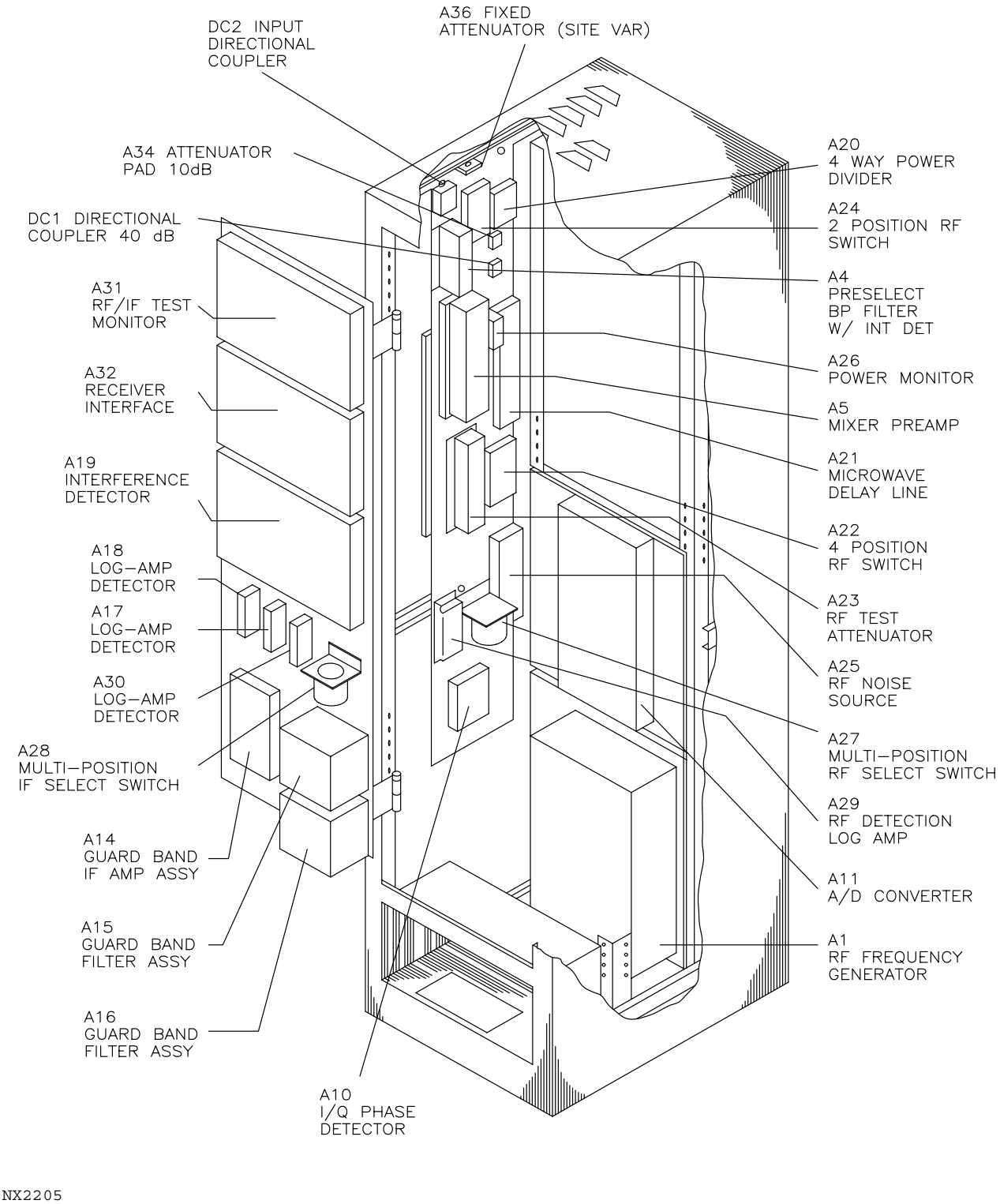


Figure 6-74. Receiver Cabinet UD4, Internal View

6-6.24 RECEIVER CHANNEL ALIGNMENT.

This procedure provides instruction for aligning the linear channels of the receiver. The adjustments require one technician at RDA Radar Receiver UD4 and are as follows:

1. Initial gain adjustment of IF Amplifier/Limiter UD4A9
2. Adjust and balance the gain on I/Q Phase Detector UD4A10
3. DC Offset null of both channels of I/Q Phase Detector UD4A10
4. Adjust the AGC threshold of AGC Controller UD4A13
5. Final adjustment of IF Amplifier/Limiter gain.
6. AGC Clocks 1 and 2 Alignment.

6-6.24.1 Initial IF Amplifier/Limiter Gain Adjustment. This adjustment establishes the noise floor of the receiver equal to -50 dBm which is roughly equivalent to two LSBs of the Analog to Digital Converter. It is performed with internally generated set noise as the only signal input. RDA alarms LIN/LOG CHANNEL NOISE LEVEL DEGRADED are indications that this adjustment is required.

6-6.24.1.1 Equipment and Tools Required.

1. Power Meter HP436A or equivalent
2. Power Sensor HP8484A or equivalent
3. Right angle SMA male-to-SMA female adapter
4. SMA male-to-N-type female adapter
5. Screwdriver, 1/8-inch flat-blade
6. SMA Torque wrench
7. AGC Test Fixture

6-6.24.1.2 Initial Conditions/Preliminary Setup.

1. Perform paragraph 6-6.15.3 , steps 1 through 2.b.4.
2. Set up RDASOT to use TESTSIG with no input test signal by performing the following steps at the RDA System Console, enter:

| Step | Operator Action | System Response/Comments |
|---|---|---|
| a. | **RDASOT<Return>** | RDASOT Main Menu (Mode Selection Menu for Redundant sites) is displayed. |
| b. | ***1 or 2*** **<Return>** Redundant sites only | Either FULL or LIMITED mode may be used for this procedure at Redundant sites. |

| Step | Operator Action | System Response/Comments |
|---|---|---|
| c. | **4<Return>** | To select Manual Control and Display Menu. |
| d. | **2<Return>** | To select Control RCVR/Signal Proc; TESTSIG Source Selection Menu is displayed. |
| e. | **1<Return>** | To select All Sources Off. |

6-6.24.1.3 Alignment Procedure.

1. Set the IF Attenuator to minimum attenuation (maximum gain) by performing the following procedure:
   a. Open rear door of Radar Receiver UD4 and locate IF Attenuator Assembly UD4A8 and AGC Controller UD4A13. (See Figure 6-75.)
   b. Disconnect P1 of cable W410 from J10 of AGC Controller UD4A13.
   c. Connect AGC test fixture to IF attenuator UD4A8J5 via P1 of cable W410.
   d. On the AGC test fixture, set attenuator switches S1 through S6 to the Ø position. This sets all AGC attenuator bits to Ø.
   e. Load the attenuator switch settings into IF Attenuator UD4A8 by pressing the AGC CLOCK button or toggling the AGC CLOCK switch S7 from Ø to 1 and back to Ø.
2. At IF Amplifier/Limiter UD4A9, disconnect P1 of cable W208 from output jack J2. (See Figure 6-75.)
3. Configure the HP436A Power Meter with HP8484A Power Sensor (-70 dBm to -20 dBm) and calibrate as outlined in paragraph 6-6.22.4. Do not forget to remove the 30 dB reference attenuator used during calibration.
4. Connect the HP8484A Power Sensor to J2 (57 MHz IF) of UD4A9 using a right-angle SMA male-to-SMA female adapter, and an SMA male-to-N-type female adapter.
5. At the power meter, press the dBm MODE push button and read display.

**NOTE**

A meter reading of -50 ± 3 dBm shall be obtained. If the reading is within these limits, do not adjust the gain at this time. Defer adjustment for Final IF Amplifier Limiter Gain adjustment of paragraph 6-6.24.6.

6. If the power meter reading is outside the limits, adjust the gain of IF Amplifier/Limiter UD4A9 to obtain a meter reading of -50 ± 3 dBm. The gain

control is located behind a cover screw on the underside of the IF Amplifier/Limiter near J3. Use a short 1/8-inch flat-blade screwdriver to turn the adjustment screw. (See Figure 6-76.)

7. Disconnect the HP8484A Power Sensor and adapters from J2 of the IF Amplifier/Limiter UD4A9. Reconnect P1 of cable W208 to UD4A9J2 and tighten with SMA torque wrench to 8 in-lbs.

8. Disconnect the AGC test fixture from cable W410. Reconnect P1 of cable W410 to J10 of AGC Controller UD4A13.

6-6.24.2 I/Q Phase Detector Gain Adjustment.

6-6.24.2.1 Equipment and Tools Required.

1. Signal Generator, Gigatronic Model 600/.01-8 option 3 or equivalent
2. Power Meter HP436A or equivalent
3. Power Sensor HP8484A or equivalent
4. 30 dB Attenuator HP8491A or equivalent
5. Test Cable (RG-142B) SMA male-to-SMA female connector, 10 feet
6. Test cable, twinax male-to-BNC male, 6 feet (Qty 2)
7. Digital Multimeter, Fluke Model 8060A or equivalent
8. Terminator 124 ohms, BNC male connector (Qty 2)
9. Adapter, BNC-T Pomona 2285 or equivalent
10. Adapter, BNC male-to-male banana plug
11. Screwdriver, 1/8-inch flat-tip
12. AGC Test Fixture
13. SMA Torque wrench

6-6.24.2.2 Initial Conditions/Preliminary Setup.

1. Perform paragraph 6-6.15.3 , steps 1 through 2.b.4.
2. Set up RDASOT to use TESTSIG with no input test signal by performing the following steps at the RDA System Console, enter:

| Step | Operator Action | System Response/Comments |
|---|---|---|
| a. | **RDASOT<Return>** | RDASOT Main Menu (Mode Selection Menu for Redundant sites) is displayed. |
| b. | **2<Return>**<br>Redundant sites only | To select LIMITED mode for this procedure at Redundant sites. |

| Step | Operator Action | System Response/Comments |
|---|---|---|
| c. | **4<Return>** | To select Manual Control and Display Menu. |
| d. | **2<Return>** | To select Control RCVR/Signal Proc; TESTSIG Source Selection Menu is displayed. |
| e. | **1<Return>** | To select All Sources Off. |

3. Connect the AGC Test Fixture and set it to minimum attenuation (maximum gain) according to the procedure in paragraph 6-6.24.1.3, steps 1.a through 1.e.

6-6.24.2.3 Adjustment Procedure. Check and adjust the gain of I/Q Phase Detector UD4A10 by performing the following steps:

1. At IF Amplifier/Limiter UD4A9, disconnect P1 of cable W208 from output jack J2. (See Figure 6-75.)
2. Configure the HP436A Power Meter with HP8484A Power Sensor (-70 dBm to -20 dBm) and calibrate as outlined in paragraph 6-6.22.4. Do not forget to remove the 30 dB reference attenuator used during calibration.
3. Connect an external 30 dB coax attenuator (HP8491A or equivalent) between HP8484A Power Sensor and the adapters and reconnect to 4A9J2.
4. Set the signal generator to the frequency measured in paragraph 6-6.23.3 step 2.c plus a 15-kHz offset, continuous wave (CW).
5. Set signal generator output power to -40 dBm.
6. At the Mixer-Preamplifier UD4A5, remove the terminator from J9.
7. Connect output of signal generator to J9 of UD4A5 using test cable and appropriate adapters.
8. Adjust output power of signal generator as needed to obtain a reading of -50 ± 0.1 dBm on the power meter connected to J2 of UD4A9 (left connected from step 3).

**NOTE**

The output power at J2 of UD4A9 is actually -20 dBm. The 30 dB coax attenuator causes the -50 dBm reading.

9. Disconnect the HP8484A Power Sensor, attenuator, and adaptors from J2 of IF Amplifier/Limiter UD4A9.
10. Reconnect P1 of cable W208 to J2 of UD4A9 and tighten with SMA torque wrench to 8 in-lbs.
11. At I/Q Phase Detector UD4A10, disconnect P1 of W315 from I video output jack J4 and replace with the twinax end of a twinax male to BNC male test cable.

12. Set the digital multimeter to read on the 200 mVac scale.

13. Terminate the test cable (BNC end) into 124 ohms and connect to the digital multimeter. Use a BNC-T, 124 ohm BNC male terminator and a BNC male to dual banana plug adapter to accomplish this.

14. Unscrew the I and Q Gain Control access cover screws on UD4A10.

15. Note multimeter reading. The correct value is 77.4 ± 0.5 mVac.

16. If adjustment is necessary, use an 1/8-inch flat-blade screwdriver to turn the I Gain Control until the meter reads 77.4 mVac. The I Gain Control is on the same side of the I/Q Phase Detector as J4. (See Figure 6-77).

17. Disconnect P1 of W316 from Q video output jack J6 of UD4A10 and replace with the twinax end of the second test cable.

18. Repeat steps 15 and 16 adjusting the Q Gain Control. The Q Gain Control is on the same side of the I/Q Phase Detector as J6. (See Figure 6-77).

19. Replace the I and Q Gain Control access cover screws.

20. Remove AGC test fixture from UD4A8J5 and reconnect P1 of cable W410 to J10 of AGC Controller UD4A13.

**NOTE**

If an adjustment was made to the I/Q Phase Detector gains, perform the AGC threshold adjustment in accordance with 6-6.24.4 . The signal generator should remain connected to 4A5J9 for the AGC threshold adjustment. Leave the test cables connected to 4A10J4 and 4A10J6 for this adjustment or adjustment of the DC Offset, paragraph 6-6.24.3 .

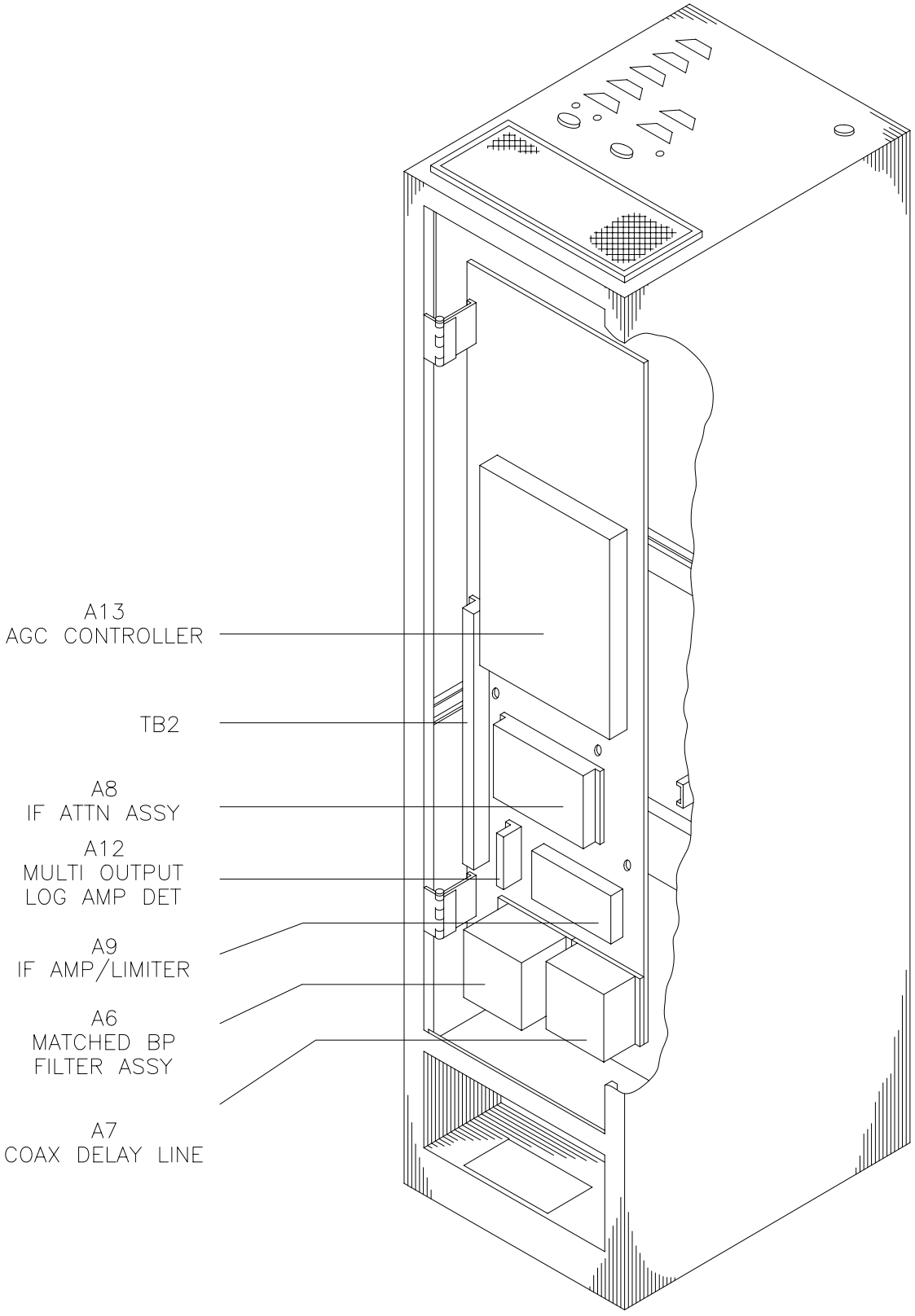


Figure 6-75. Radar Receiver UD4, Component Layout (Rear View)

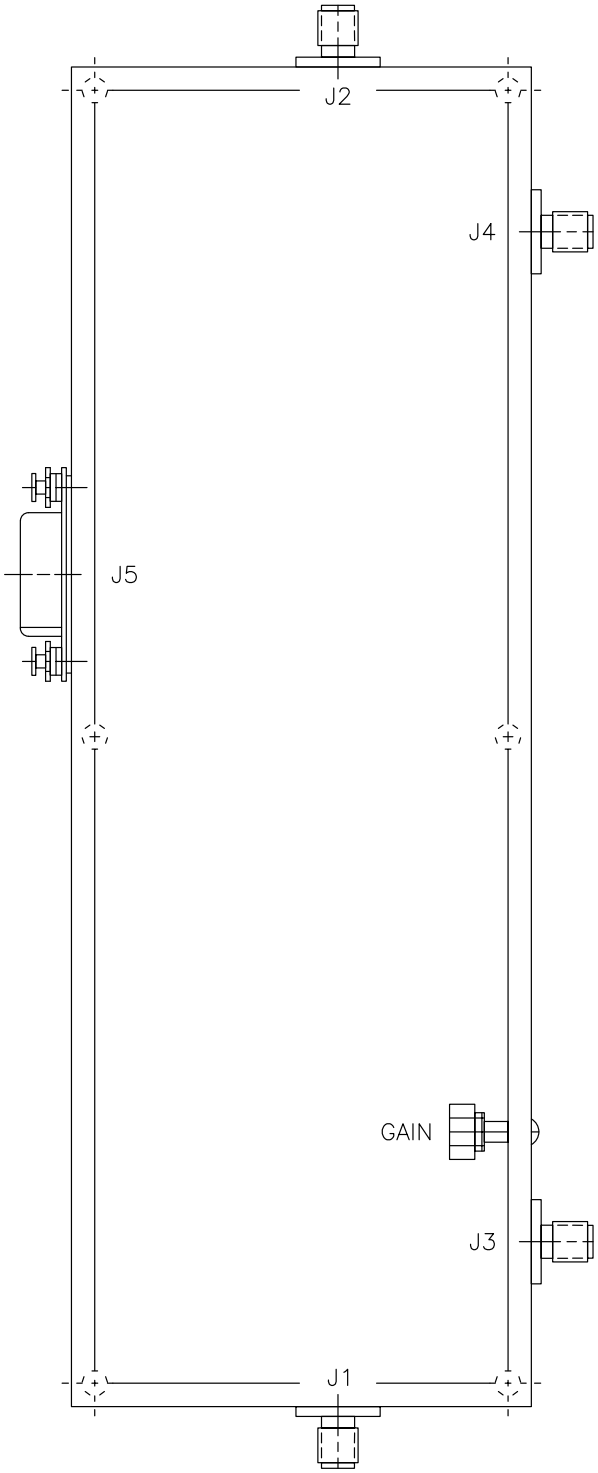


Figure 6-76. IF Amplifier/Limiter UD4A9

6-6.24.3 I/Q Phase Detector DC Offset Adjustment. The occurrence of the RDA alarms I BIAS OUT OF LIMIT or Q BIAS OUT OF LIMIT requires readjustment of the appropriate DC offset adjustment. This adjustment is performed with the input of the I/Q Phase Detector terminated into 50 ohms rather than its normal input (refer to paragraph 6-6.24.3.3 ).

6-6.24.3.1 Equipment and Tools Required.

1. Screwdriver set, flat-tip
2. Digital Multimeter, (Fluke 8060A or equivalent)
3. Terminator, SMA, 50 ohm

6-6.24.3.2 Initial Conditions/Preliminary Setup. None.

6-6.24.3.3 Adjustment Procedure. Check and adjust the DC offset voltage at the output of the I/Q Phase Detector UD4A10 by performing the following steps:

1. At I/Q Phase Detector UD4A10, disconnect P2 of cable W208 from input jack J1. (See Figure 6-74).
2. Unscrew the I and Q DC Offset adjustment access covers with a 1/4-inch flat-blade screwdriver (see Figure 6-77).
3. Connect a 50 ohm SMA terminator to J1 of UD4A10.
4. Connect digital multimeter to UD4A10J4, the I video output of 4A10, using the twinax to BNC test cable. The DC Offset adjustments are effective only on the 4A10J4 and 4A10J6 outputs.
5. Set the digital multimeter to read on the 200 mVdc scale.
6. The meter should read 0 ± 1 mVdc. If necessary, adjust the I DC Offset Control.
7. Connect digital multimeter to UD4A10J6, the Q video output, using the twinax to BNC test cable.
8. Repeat step 6 adjusting instead the Q DC Offset Control.
9. Replace the access covers.
10. Remove the 50 ohm SMA terminator from the input jack J1 of the I/Q Phase Detector UD4Al0 and reconnect P2 of W208 to J1.

**NOTE**

It is not necessary to repeat any other adjustments if either DC Offset adjustment is made.

6-6.24.4 AGC Threshold Voltage Adjustment.

6-6.24.4.1 Equipment and Tools Required.

1. Oscilloscope, Tektronix 2236 or equivalent

2. Test cable, twinax male to BNC male, 6 feet (Qty 2)
3. Terminator, 124 ohm, BNC male connector (Qty 2)
4. Adapter, BNC Tee Connector (Qty 2)
5. Signal Generator, 600/.01-8 option 3 or equivalent
6. Power Meter, HP436A or equivalent
7. Power Sensor, HP8484A or equivalent
8. 30 dB Attenuator, HP8491A or equivalent

6-6.24.4.2 Initial Conditions/Preliminary Setup.

1. Prior to the adjustment of the AGC threshold, it is necessary to perform:
   a. Initial IF Amplifier/Limiter gain adjustment described in paragraph 6-6.24.1 .
   b. I/Q Phase Detector gain adjustment described in paragraph 6-6.24.2 .
2. With the AGC test fixture removed, normal control of IF attenuator is required.
3. The signal generator must be connected to 4A5J9 as in paragraph 6-6.24.2.3 , steps 1 through 8.
4. The test cables should be connected to 4A10J4 and 4A10J6, as in paragraph 6-6.24.2.3 , steps 11 and 17.

6-6.24.4.3 Adjustment Procedure. Check and adjust AGC threshold voltage by performing the following steps:

1. Configure an oscilloscope to operate in the X-Y mode where X is the horizontal axis and Y is the vertical axis. (A and B sec per Division set to X/Y).
2. Set oscilloscope gain to 500 mV/cm (0.5 V/cm). Make sure that variable vertical gain adjustments on oscilloscope are in the CAL position.
3. Connect the BNC end of each of the test cables which are connected to 4A10J4 (I VIDEO) and 4A10J6 (Q VIDEO) to a BNC tee. Connect the BNC tee female to the 124-ohm terminator and the BNC tee male to the A and B channel inputs of the oscilloscope.
4. Adjust the signal generator output for a -40 dBm signal at the site frequency plus 75 kHz.

**NOTE**

It is best to perform this alignment using an analog oscilloscope (such as the Tektronix 2236 Oscilloscope listed in paragraph 6-6.24.4.1 ). When using a digital oscilloscope, the “circle” will be

displayed as a series of dots and will be difficult to see. If you are using the Tektronix TDS-420 Oscilloscope, you can select "Variable Persistence" from the "Display" menu and use the manual control knob to set a "persistence" time that makes the circle show up a little better. A "persistence" time of 1.5 to 3.5 seconds may be helpful. If you are using a digital oscilloscope other than the TDS-420, look to see if it also has some type of "persistence" feature which may be helpful.

5. Observe the oscilloscope display; a circle should be present. If a circle is not present or very small, increase the power in 5 dBm steps. Do not exceed -10 dBm. Reduced room lighting will enhance the oscilloscope presentation. Avoid maximum scope intensity brightness for a sustained length of time.

6. Decrease the output level of the signal generator until the circle collapses into a dot. This usually corresponds to a signal generator power of around -50 dBm.

7. Begin to increase the output power of the signal generator in 1 dB steps. As the power increases, the circle will expand and then abruptly shrink by approximately 20 percent. This should occur when the circle reaches approximately 3 volts peak-to-peak in diameter.

8. Vary the amplitude of the signal source in 0.1 dB steps until two concentric circles appear on the oscilloscope screen (usually about -21 dBm input power). The amplitude of the diameter of the outer circle shall be 6 ± 0.2 cm corresponding to 3 ± 0.1 volts peak-to-peak. If above condition is met, proceed to paragraph 6-6.24.5 . If adjustment is necessary, go to step 9.

9. Using a 1/8-inch flat-blade tuning tool or screwdriver to turn the AGC threshold control 4A13R9, perform steps a or b below. It may be necessary to remove the cover plate from 4A13 to gain access to 4A13R9.

   a. If the diameter of the outer circle is less than 3 ± 0.1 V, note the initial position of the AGC threshold control, then turn it clockwise to cause the inner circle to disappear. Now increase the signal power from the signal generator until both circles are present. Note that the diameters are increasing. Proceed in this manner until the diameter of the outer circle is 6 ± 0.2 cm.

   b. If the diameter of the outer circle is more than 3 ± 0.1 V, note the initial position of the AGC threshold control, then turn it counterclockwise to cause the outer circle to disappear. Now decrease the signal power from the signal generator until both circles are present. Note that the circles are decreasing in diameter, and proceed in this manner until the diameter of the outer circle is 6 ± 0.2 cm.

**NOTE**

It is not necessary to repeat any other adjustments if the AGC threshold is adjusted.

6-6.24.5 Equipment Restoration.

Restore equipment to normal operation as follows:

1. Deenergize signal generator and oscilloscope and secure all test cables and adaptors.
2. Disconnect test cable from 4A10J4 and 4A10J6 and reconnect the normal system cables.
3. Reconnect the terminator to 4A5J9.
4. Close inner and outer doors of UD4.
5. At the RDA System Console, enter a series of **Ø<Return>** until the RDASOT program terminates.

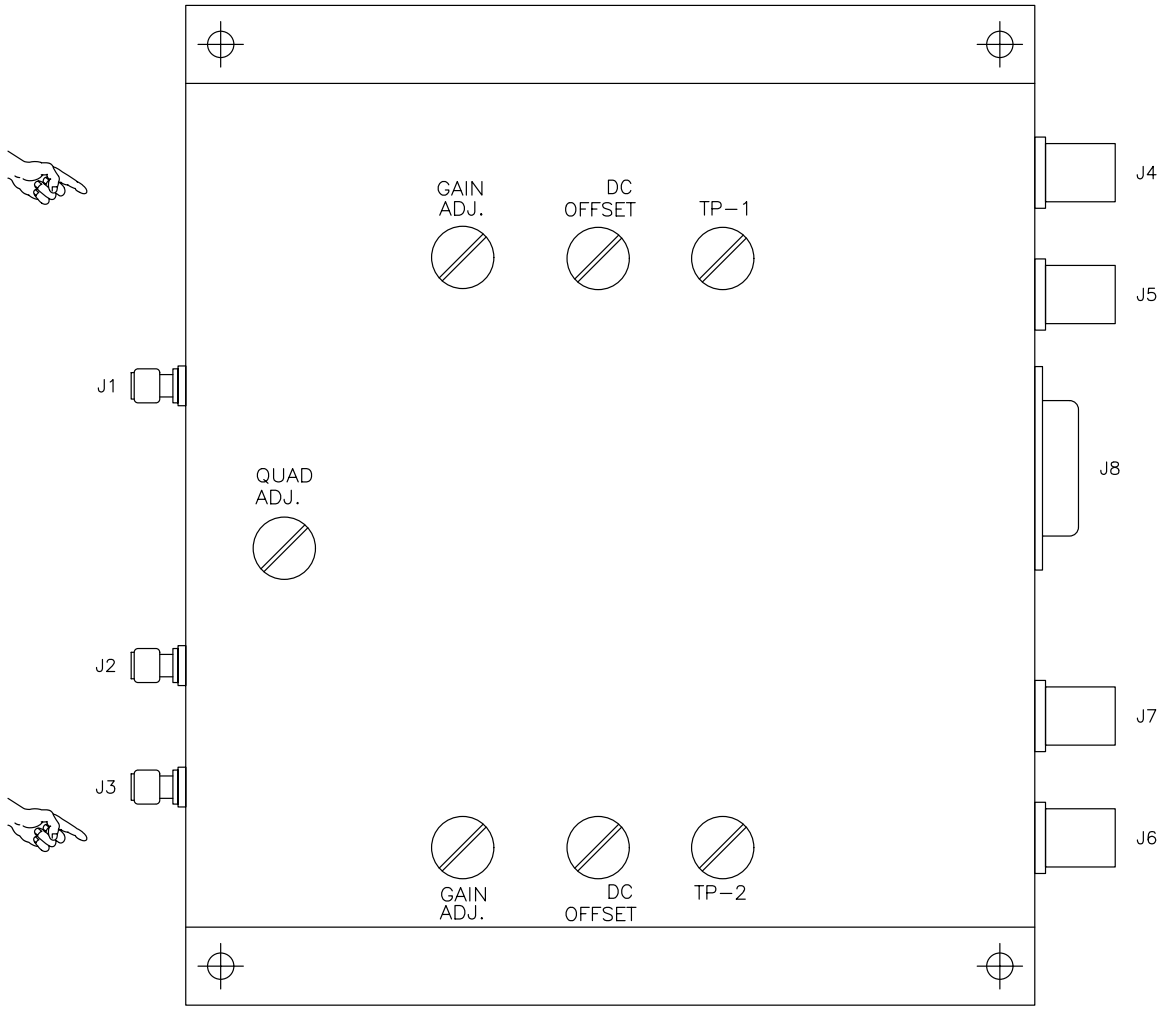


NOTE: This drawing shows the Lorch Electronics version. The Merrimac model has the adjustment slots and test points in different locations.

NX2208

Figure 6-77. I & Q Phase Detector UD4A10

6-6.24.6 Final Adjustment of IF Amplifier/Limiter Gain.

6-6.24.6.1 Equipment and Tools Required. None.

6-6.24.6.2 Initial Conditions/Preliminary Setup. Before attempting this adjustment, all of the requirements of paragraphs 6-6.24.1 , 6-6.24.2 , 6-6.24.3 , 6-6.24.4 , and 6-6.24.5 must be met.

6-6.24.6.3 Adjustment Procedure.

1. Bring up the applications software by entering **RDAUP<Return>** on the RDA System Console.
2. Access the Applications Main Menu by **simultaneously** pressing the **<Shift>** and **<Port>** keys.
3. The start up process should continue until the STANDBY mode is reached. When the STANDBY mode is reached, enter **DIPD<Tab>REC<Return>** on the command and parameter lines.
4. Note the SHORT PULSE, LIN CHAN NOISE. It shall be $0.200 \pm 0.040 \times E^{-5}$. If not, make a quarter turn adjustment to the IF Amplifier/Limiter gain 4A9R1.

**NOTE**

Turn clockwise as viewed from the bottom of the unit if the displayed value is too low; otherwise, turn counterclockwise. A quarter turn adjustment will result in a change of approximately $0.04 \times 10^{-5}$.

**NOTE**

The noise displayed should change as a result of this adjustment, but it requires about 10 minutes for the Signal Processor to settle.

5. At the conclusion of the adjustment procedure, if 4A9R1 has been changed, the IF Amplifier/Limiter path loss must be measured following the procedure outlined in paragraph 6-6.31 and the application program Current Adaptation parameters R94 and R96 must be updated. The AGC Threshold adjust should be checked per paragraph 6-6.24.4 when the I/Q Phase Detector gains and IF Amplifier/Limiter gain is finalized.

6-6.24.7 AGC Clocks 1 and 2 Alignment. This procedure sets up the timing relationships between the AGC Controller UD4A13 and the analog-to-digital track and hold circuits in the Analog-to-Digital Converter UD4A11. The AGC controller controls the insertion of IF attenuation, if required, for strong signals.

**NOTE**

The alignment of the AGC clocks does not have to be performed as part of the receiver alignment as described in paragraphs

6-6.24.1 through 6-6.24.6 . The following procedure should be performed if system noise temperature is out of tolerance or if the receiver is suspected of being noisy.

6-6.24.7.1 Equipment and Tools Required.

1. Oscilloscope, Tektronix 2236 or equivalent
2. X10 Scope Probes (Qty 2)
3. Signal Processor card extractor tool
4. Signal Processor extender card
5. Screwdriver, Phillips-tip
6. ESD Component Handling Kit

6-6.24.7.2 Initial Conditions/Preliminary Setup.

1. Perform steps 1 through 6 and 21 of Table 6-13 to terminate operational software and shut down the Receiver and Signal Processor. **Redundant sites**, use corresponding Secondary PDP for channel being adjusted.
2. Open the UD4 rear cabinet door; locate and open inner component door.
3. Open the right front UD5 cabinet door.

6-6.24.7.3 Adjustment Procedure - AGC Clock 2 to Track and Hold Delay.

1. Remove the cover from the AGC Controller 4A13 using proper screwdriver.
2. Remove the cover from the Analog-to-Digital Converter 4A11 using the proper screwdriver.
3. Connect one of the X10 scope probes to 4A13TP2 which is the AGC Clock 2 signal. Connect the other end of the scope probe to Channel 1 of the oscilloscope.
4. Connect a X10 scope probe to TP5 of the A/D Converter. TP5 is near the lower left corner of U41. TP5 is the delayed Track and Hold signal. Connect the scope probe to Channel 2 of the oscilloscope.
5. At the RDA Secondary PDP, turn circuit breakers CB16 & 18 and CB22 to **ON**. **Redundant sites**, use corresponding Secondary PDP for channel being adjusted.
6. At the RDA System Console, enter **RDASOT<Return>** to bring up the RDASOT program.
7. Trigger the oscilloscope + Ext on Channel 1, the AGC Clock 2 signal. Display both Channel 1 (AGC Clock 2 signal) and Channel 2 (Track and Hold signal). Set the sweep speed to 100 nsec per cm.

8. Measure the delay between the positive going edge of Channel 1 (AGC Clock 2) and the positive going edge of Channel 2 as shown in Figure 6-78. The delay shall be 600 ± 20 nsec. If this condition is met, proceed to paragraph 6-6.24.7.4 . If it is not met (i.e., requires alignment) proceed to the next step.

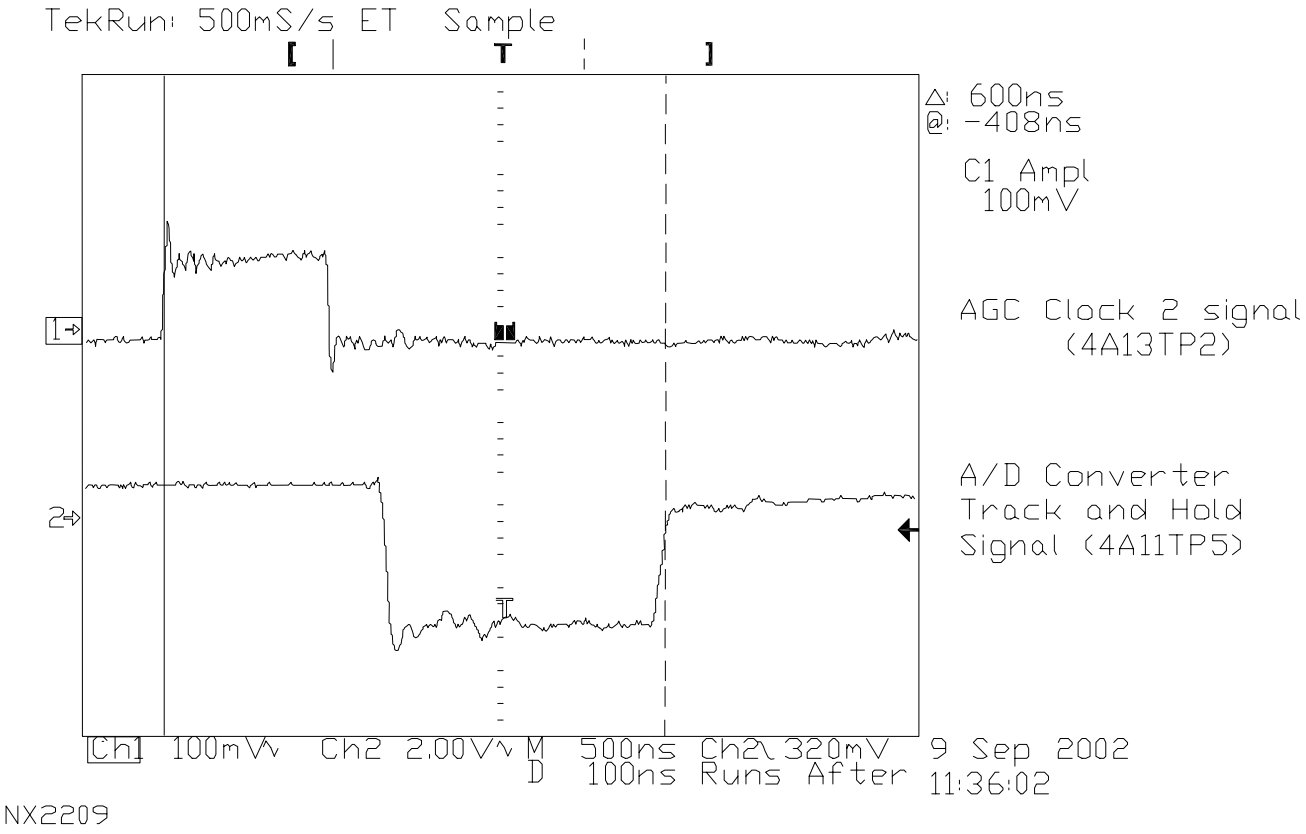


Figure 6-78. AGC Clock 2 and A/D Converter Track/Hold Signal

9. At the RDA System Console, exit RDASOT by entering **Ø<Return>**.

10. At the RDA Secondary PDP, remove power to the Signal Processor by turning circuit breaker CB16 & 18 to **OFF**. **Redundant sites**, use corresponding Secondary PDP for channel being adjusted.

**ESD** **CAUTION** **ESD**

All WSR-88D printed circuit cards are electrostatic sensitive devices which require special handling.

11. At the front right of the UD5 cabinet, open the HSP UD5A10 access door.

12. Attach ESD wrist strap to wrist and connect clip lead to cabinet chassis.

13. Using the card extractor tool, remove the HSP Control Interface-C card, 5A10A5 and set it on an ESD protective mat or bag.

14. Locate the DIP switch at card location 74H (U51). Note that the DIP switch has eight switches with switch 1 on the extreme left and 8 on the extreme right. Note further that the individual switches are either up (i.e., ON=logic 0) or down (i.e., OFF=logic 1). Switches 1 through 5 constitute the fine delay adjustment in steps of 20 nsec increments (1=80 nsec, 2=60 nsec, 3=40 nsec, 4=20 nsec, and 5=0 nsec). One of these fine delays are chosen by setting one **and only one** of these switches ON (up). It is important that only one of these switches is ON. The coarse delay adjustment is controlled by switches 6, 7, and 8 in steps of 100 nsec. In the case of switches 6, 7, and 8, it is permissible and, indeed required in most cases, to have more than one of these three switches ON. Record the initial state of the switches. Refer to Table 6-16 for typical switch settings.

15. Install the Control Interface-C card on the Signal Processor extender card, then insert the combination in the 5A10A5 slot of the HSP.

16. At the RDA Secondary PDP, turn circuit breaker CB16 & 18 to **ON**. **Redundant sites**, use corresponding Secondary PDP for channel being adjusted.

17. At the RDA System Console, enter **RDASOT<Return>** to load the RDASOT program.

18. Adjust the DIP switches at 74H (U51) to obtain the required delay of 600 ± 20 nsec. See Figure 6-78. Proceed to paragraph 6-6.24.7.4 .

6-6.24.7.4 Alignment Procedure - AGC Clock 1 to AGC Clock 2 Delay.

**NOTE**

Paragraph 6-6.24.7.3 has to be completed before performing this procedure.

1. Connect the Channel 1 X10 scope probe to 4A13TP2, which is the AGC Clock 2 signal.

2. Connect the other X10 scope probe to 4A13TP1, which is the Or'ed combination of the AGC Clock 1 and AGC Clock 2 signals.

3. Trigger the scope + Ext on Channel 1 (AGC Clock 2). Set the sweep speed to 200 nsec per cm. Display both Channel 1 and Channel 2.

4. Note that the Channel 2 display (AGC Clock 1 + AGC Clock 2) has an output pulse the same as Channel 1 (AGC Clock 2) as well as an extra pulse (AGC Clock 1). The delay between AGC Clock 1 (positive going edge) and AGC Clock 2 (positive going edge) shall be 500 ± 20 nsec as shown in Figure 6-79. If this is not the case, the DIP switch at location 74J (U59) on the Control Interface-C card, 5A10A5, must be adjusted to obtain this result.

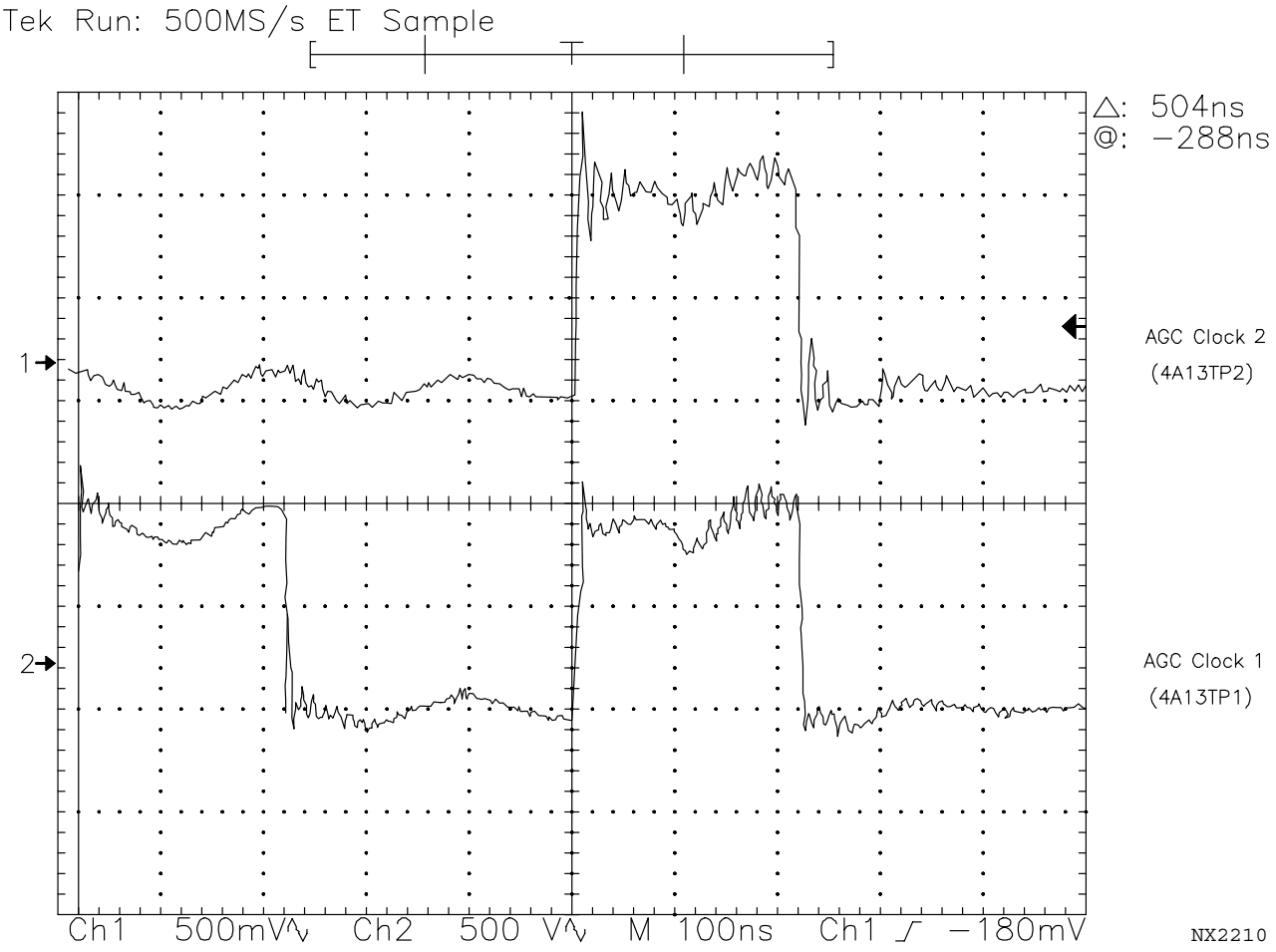


Figure 6-79. AGC Clocks 1 and 2

5. On the Control Interface-C card, 5A10A5, locate the DIP switch at card location 74J (U59). Note that the DIP switch has eight switches with switch 1 on the extreme left and 8 on the extreme right. Note further that the individual switches are either up (i.e., ON=logic 0) or down (i.e., OFF=logic 1). Switches 1 through 5 constitute the fine delay adjustment in steps of 20 nsec increments (1=80 nsec, 2=60 nsec, 3=40 nsec, 4=20 nsec and 5=0 nsec. One of these fine delays are chosen by setting one **and only one** of these switches ON (up). It is important that only one of these switches is ON. The coarse delay adjustment is controlled by switches 6, 7, and 8 in steps of 100 nsec. In the case of switches 6, 7, and 8 it is permissible and, indeed required in most cases, to have more than one of these three switches ON. Record the initial state of the switches. Refer to Table 6-16 for typical switch settings.

6. Adjust the switches to obtain a delay of 500 ± 20 nsec.

7. At the RDA Secondary PDP, remove power to Signal Processor by turning circuit breakers CB16 and 18 to **OFF**. **Redundant sites**, use corresponding Secondary PDP for channel being adjusted.

8. Remove the 5A10A5 card from the extender and replace the card in the HSP 5A10A5 slot.

9. Remove the ESD wrist strap.

10. At the rear of the UD4 Receiver Cabinet, remove the scope probes from the AGC Controller 4A13 test points.

11. Reinstall the cover plates on the AGC Controller and A/D Converter.

12. At the RDA Secondary PDP, turn circuit breakers CB16 and 18 to **ON**. **Redundant sites**, use corresponding Secondary PDP for channel being adjusted.

13. At the RDA System Console, exit RDASOT by entering **Ø<Return>** until the RDASOT program terminates. This completes the alignment procedure.

14. At the RDA System Console, enter **RDAUP<Return>**.

15. Perform the appropriate substeps of steps 25 and 26 in Table 6-15 to restore normal operation.

## 6-6.25 INTERFERENCE SUPPRESSION UNIT ALIGNMENT.

This procedure provides instructions to align the gain of the guard band amplifier and detection thresholds of the Interference Detection Unit. One technician is required at the RDA Receiver Cabinet UD4. The purpose of this procedure is as follows:

1. Adjust the gain of the Guard Band Amplifier UD4A14.

2. Adjust thresholds and saturation level of the Interference Detector UD4A19.

### 6-6.25.1 Equipment and Tools Required.

1. Digital Multimeter, Fluke Model 8060A or equivalent

2. BNC-T female-male-female

3. Terminator, 100 ohm, BNC male

4. Adapter, dual banana plug-to-BNC female

5. Adapter, BNC male-to-SMA female

### 6-6.25.2 Initial Conditions/Preliminary Setup.

1. Perform paragraph 6-6.15.3 , steps 1 through 2.b.4.

2. At the RDA System Console, set up RDASOT to inject the noise source by performing the following steps; enter:

| Step | Operator Action | System Response/Comments |
|---|---|---|
| a. | **RDASOT<Return>** | RDASOT Main Menu (Mode Selection Menu for Redundant sites) is displayed. |
| b. | **1<Return>**<br>Redundant sites only | To select FULL mode for this procedure at Redundant sites. |
| c. | **4<Return>** | To select Manual Control and Display Menu. |
| d. | **2<Return>** | To select Control RCVR/Signal Proc; TESTSIG Source Selection Menu is displayed. |
| e. | **6<Return>** | To select RF Noise Source; RF Noise Source Control Menu is displayed. |
| f. | **2<Return>** if RCVR Injection Point is not Front End | To toggle RCVR Injection Point to **Front End**; RF Noise Source Control Menu is again displayed. |
| g. | **4<Return>** | To select Test Attenuation. `Enter the new RF Test Attenuation Value (0...103 dB)` is displayed. |
| h. | **Ø<Return>** | To select 0 dB attenuation; RF Noise Source Control Menu is again displayed. |
| i. | **1<Return>** | To select Inject Signal. |

6-6.25.3 Guard Band IF Amplifier Alignment.

1. Measure the main channel Log Video.
   a. Insert the dual banana adapter into the multimeter and connect the negative lead to the common connection on the meter.
   b. Connect the BNC-T adapter to the banana adapter and the 100 ohm terminator to one port on the BNC-T adapter.
   c. Connect the BNC-to-SMA adapter to the other port on the BNC-T and set the multimeter to measure 2 Vdc.
   d. At the Interference Detector UD4A19, disconnect cable 4W302 P2 from UD4A19 J5 and connect it to the adapters on the multimeter.

e. The multimeter should read .900 Vdc ± .2 Vdc. Make a note of the value for use in steps 2 and 3.

2. Align Guard + IF Amplifier.

a. Reconnect cable 4W302P2 to UD4A19J5. Disconnect cable 4W304 P1 from UD4A19J1 and connect it to the adapters on the multimeter.

b. Adjust the recessed potentiometer marked G+, on the bottom of UD4A14, (see Figure 6-80) so that the multimeter reads the same voltage as noted in step 1.e.

c. Disconnect cable 4W304 from the multimeter and reconnect the cable to UD4A19J1.

3. Align Guard - IF Amplifier.

a. Disconnect cable 4W306 from UD4A19J3 and connect it to the adapters on the multimeter.

b. Adjust the recessed potentiometer marked G-, on the bottom of UD4A14, (see Figure 6-80) so that the multimeter reads the same voltage as noted in step 1.e.

c. Disconnect cable 4W306 from the multimeter and reconnect the cable to UD4A19J3. Remove the adapters from the multimeter and install meter leads.

d. At the RDA System Console exit RDASOT be entering **Ø<Return>** four times.

6-6.25.4 Set Interference Detector Thresholds.

1. Set the Saturation Level.

a. Disconnect cable 4W302 P2 from UD4A19J5. Connect the negative meter lead to UD4A19TP1. Connect the positive meter lead to UD4A19TP7.

b. Adjust the Saturation potentiometer, R49, so that the multimeter reads 2,775 mVdc ± 10 mV.

2. Set the Leakage Level.

a. Connect the positive meter lead to UD4A19TP4. Leave the negative lead on TP1 and cable 4W302 disconnected.

b. Adjust the Leakage Level potentiometer, R39, so that the meter reads 525 mVdc ± 5 mV.

3. Set the Fixed Threshold.

a. Connect the positive multimeter lead to UD4A19TP8. Leave the negative lead on TP1.

b. Adjust the Fixed Threshold potentiometer, R42, so that the meter reads -750 mVdc ± 5 mV.

c. Disconnect the meter leads, restore the receiver to normal, and perform the procedure in paragraph 6-6.16.3 , steps 12 through 15, to restore system operation.

## 6-6.26 RF/IF TEST MONITOR ALIGNMENT.

This procedure provides instructions for adjusting the RF/IF Test Monitor UD4A31, A/D conversion reference voltage. One technician is required at Radar Receiver UD4.

### 6-6.26.1 Equipment and Tools Required.

1. Digital Multimeter, Fluke Model 8060A or equivalent
2. 6-foot banana to alligator test lead
3. Screwdriver, flat-tip, miniature
4. Screwdriver, Phillips-tip, large

### 6-6.26.2 Initial Conditions/Preliminary Setup.

1. Perform procedure in paragraph 6-6.15.3 , steps 1 through 3.d.
2. Open the UD4 rear cabinet door; locate and open the inner component doors.
3. Locate RF/IF Test Monitor UD4A31 (Figure 6-74).

### 6-6.26.3 RF/IF Test Monitor Alignment Procedure.

**NOTE**

Receiver diagnostics are dependent on proper alignment of the RF/IF Test Monitor (paragraph 6-6.26.3 ). Improper alignment will indicate component failures or erroneous RDASOT "Expected/Measured" readings when receiver diagnostics are utilized.

1. At the RDA System Console, use the RDASOT program to set up initial conditions to measure and adjust the A/D converter reference voltage by performing the following steps; enter:

| Step | Operator Action | System Response/Comments |
|---|---|---|
| a. | **RDASOT<Return>** | RDASOT Main Menu (Mode Selection Menu for Redundant sites) is displayed. |
| b. | ***1 or 2*** **<Return>** Redundant sites only | Either FULL or LIMITED mode may be used for this procedure at Redundant sites. |
| c. | **4<Return>** | To select Manual Control and Display Menu. |

| Step | Operator Action | System Response/Comments |
|---|---|---|
| d. | **2<Return>** | To select Control RCVR/Signal Proc; the TESTSIG Source Selection Menu will be displayed. |
| e. | **5<Return>** | To select CW Source; CW Source Control Menu is displayed. |
| f. | **3<Return>** | To select RCVR Interface Output Select (RIOS); Receiver Interface Output Select RIOS Menu is displayed. |
| g. | **8<Return>** | To select RF/IF Test Monitor Output; Receiver Test Select (RTS) Menu is displayed. |
| h. | **6<Return>** | To select DC Offset Test. |

2. Verify DC Offset as follows:

   a. Set the digital voltmeter to the 2 volt DC scale. Connect the negative lead to chassis ground and the positive lead to UD4A31TP1 (DC OFFSET). (See Figure 6-81).

   b. The meter should read 0 V ± 0.003 V. If this reading is not obtained, it will be necessary to troubleshoot the unit being tested.

3. Adjust the ADC Reference Level as follows:

   a. Set the digital voltmeter to the 20 volt DC scale. Connect the negative lead to chassis ground and the positive lead to UD4A31TP2 (ADC Reference Level). (See Figure 6-81).

   b. Adjust 4A31R78 to obtain a reading of -2.0 V ± 0.003 V.

4. If both of the above criteria are met, this concludes the alignment of the RF/IF Test Monitor UD4A31.

5. At the RDA System Console, enter **Ø<Return>** until RDASOT is terminated.

6. At the RDA System Console, enter **RDAUP<Return>**.

7. Perform appropriate substeps of steps 25 and 26 of Table 6-15 to restore system to normal operations.

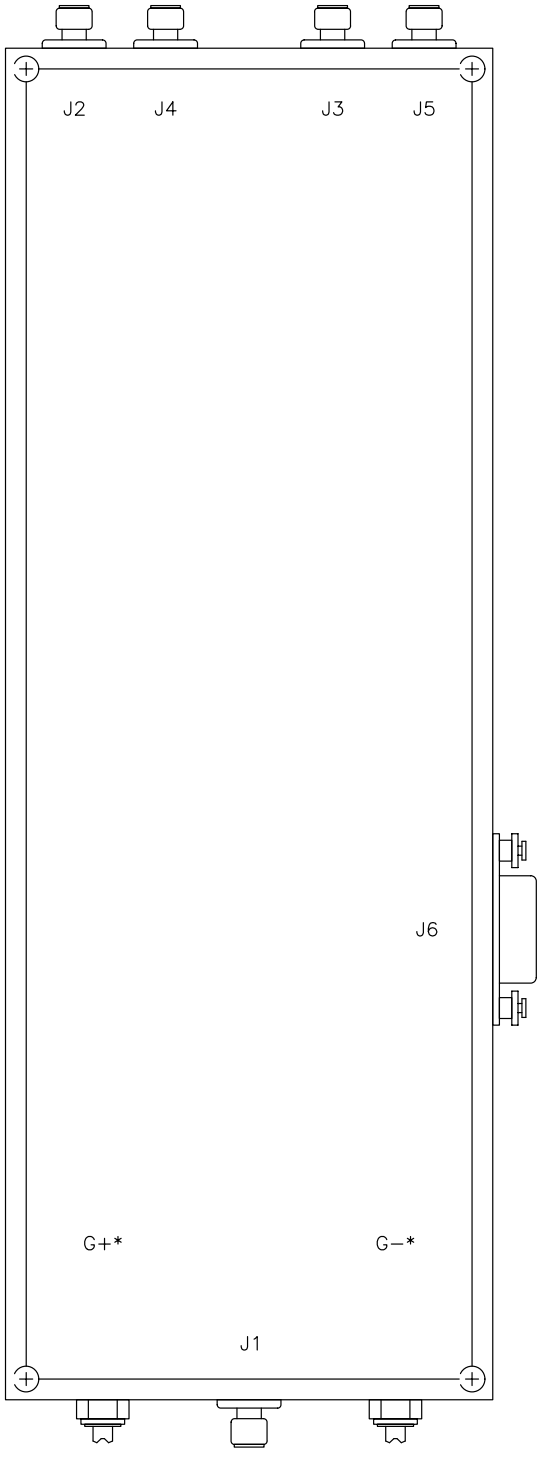


Figure 6-80. Guard Band IF Amplifier UD4A14

## 6-6.27 RDA POWER MONITOR BIAS ADJUSTMENT.

This procedure provides instructions for checking and adjusting the DC offset (bias) of the transmitter (klystron) and antenna RF power monitor circuitry. The Transmitter Diagnostic subtest of the RDASOT program is used to observe the present bias value. The appropriate Power Meter Adjustment pot on RDADP Maintenance Panel UD5A2 is used to set the correct value.

### 6-6.27.1 Equipment and Tools Required.

Screwdriver, flat-tip, miniature, 3/32-inch

### 6-6.27.2 Initial Conditions/Preliminary Setup.

Perform paragraph 6-6.15.3 , steps 1 through 2.b.4.

### 6-6.27.3 RDA Power Monitor Bias Adjustment Procedure.

**NOTE**

Power to the power monitors should be on for at least 1 hour prior to performing this procedure.

1. At the RDA System Console, load the RDASOT program by performing the following steps; enter:

| Step | Operator Action | System Response/Comments |
|---|---|---|
| a. | **RDASOT<Return>** | RDASOT Main Menu (Mode Selection Menu for Redundant sites) is displayed. |
| b. | **1<Return>**<br>Redundant sites only | To select FULL mode for this procedure at Redundant sites. |
| c. | **2<Return>** | To select Diagnostic Menu. |
| d. | **7<Return>** | To select Transmitter Diagnostics; XMITDIAG Test Control Menu is displayed. |
| e. | **4<Return>** | To Deselect All Subtests; XMITDIAG Test Control Menu is again displayed. |
| f. | **5<Return>** | To Select Individual Subtests; XMITDIAG Subtest Selection Menu is displayed. |
| g. | **4<Return>** | To select Subtest4 - Peak Power Measurement. Observe `SELECTED` is displayed for Subtest4. XMITDIAG Subtest Selection Menu is again displayed. |

| Step | Operator Action | System Response/Comments |
|---|---|---|
| h. | **Ø<Return>** | To select Subtest Selection Complete; XMITDIAG Test Control Menu is displayed. |
| i. | **1<Return>** | To select Begin Subtest Execution; The Long Pulse Peak Power Measurement and power data table is displayed. |
| j. | **<Return>** | Repeats subtest for Short Pulse. |

2. Note the meter bias (METER - XMTR off) readings in the TRANSMITTER POWER METER and in the ANTENNA POWER METER columns of the power data table. The correct value is 5 for the transmitter and 10 for the antenna. If correction is needed, go to step 3, otherwise, press **<Return>** and go to step 4.

**NOTE**

If <Return> is entered to continue the test, it may take approximately 1 minute for test to end.

3. Perform the following steps to adjust either or both meter bias values.

   a. At RDA Maintenance Panel UD5A2 (see Figure 6-82), locate the antenna power meter and transmitter power meter bias adjustment controls (labeled ANT and XMTR in the POWER METER ADJ zone of the panel). The XMTR control affects the transmitter power meter bias and the ANT control affects the antenna power meter bias.

   b. Using the jeweler's screwdriver, turn the appropriate control to adjust the meter bias value. Approximately one-eighth of a turn will change the reading one digit.

**NOTE**

If the klystron is not sufficiently warm or is weak, the transmitter will fault out and a prompt will be displayed before procedure can proceed.

   c. At the RDA System Console, enter **<Return>** to signal the program to continue. Check for the prompt `ENTER Ø OR TERM TO EXIT OR ERROR # TO DISPLAY.`

   d. Enter **Ø<Return>** to terminate subtest 4. Observe that END SUBTEST4 - PEAK POWER MEASUREMENT followed by XMITDIAG Test Control Menu is displayed.

   e. Perform steps 1.i and 2 and, if necessary, step 3 until power monitor bias values are 5 for the transmitter and 10 for the antenna.

4. At RDA System Console, enter **Ø<Return>** until RDASOT program terminates. Observe that the display will indicate the cancellation of each RDASOT task by listing each one followed by `END OF TASK 255` and ending with `RDASOTX: END OF TASK Ø`.

5. Perform procedure in paragraph 6-6.16.3 , steps 12 through 15, to restore system to remote operation.

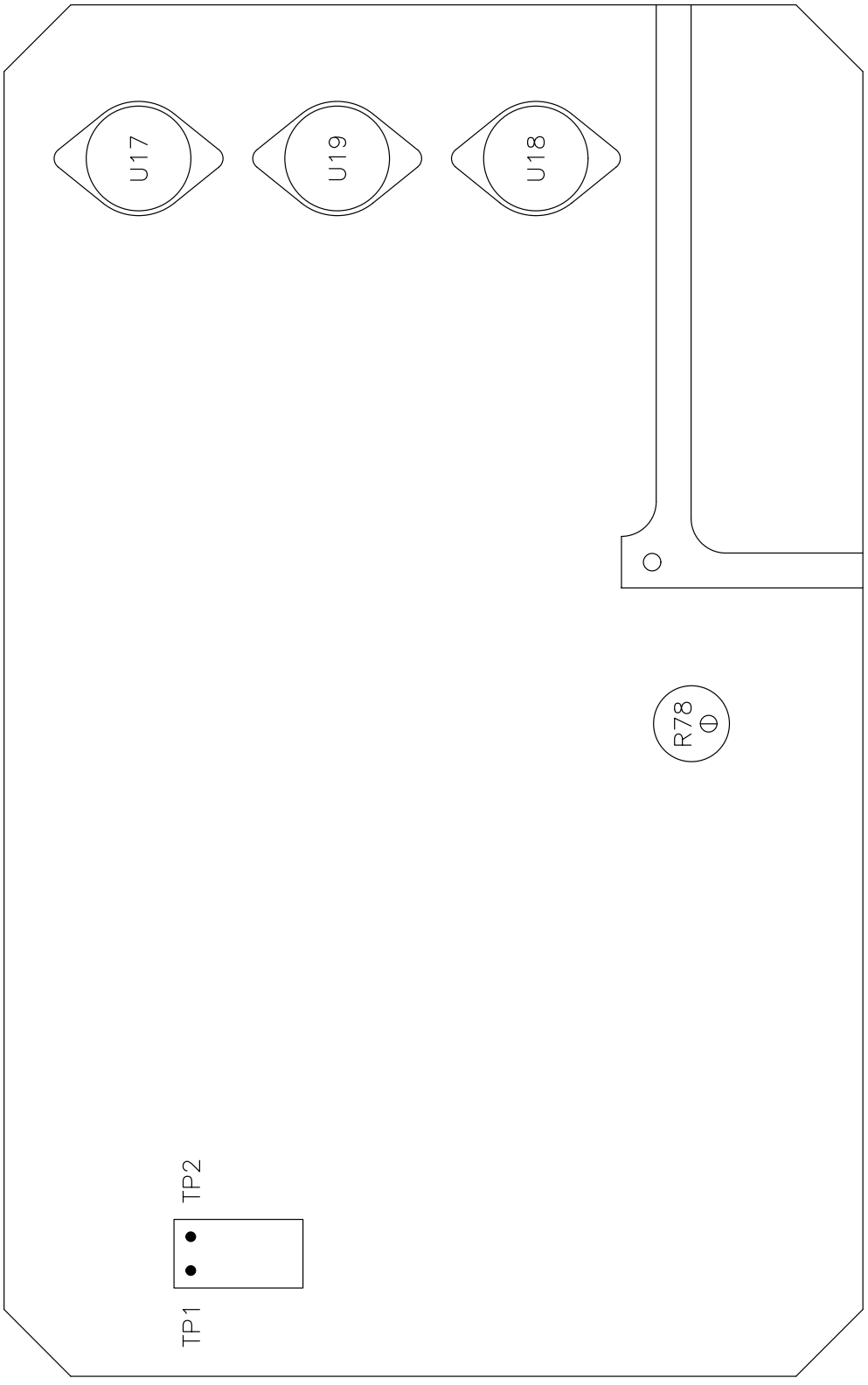


Figure 6-81. RF/IF Test Monitor UD4A31 Location

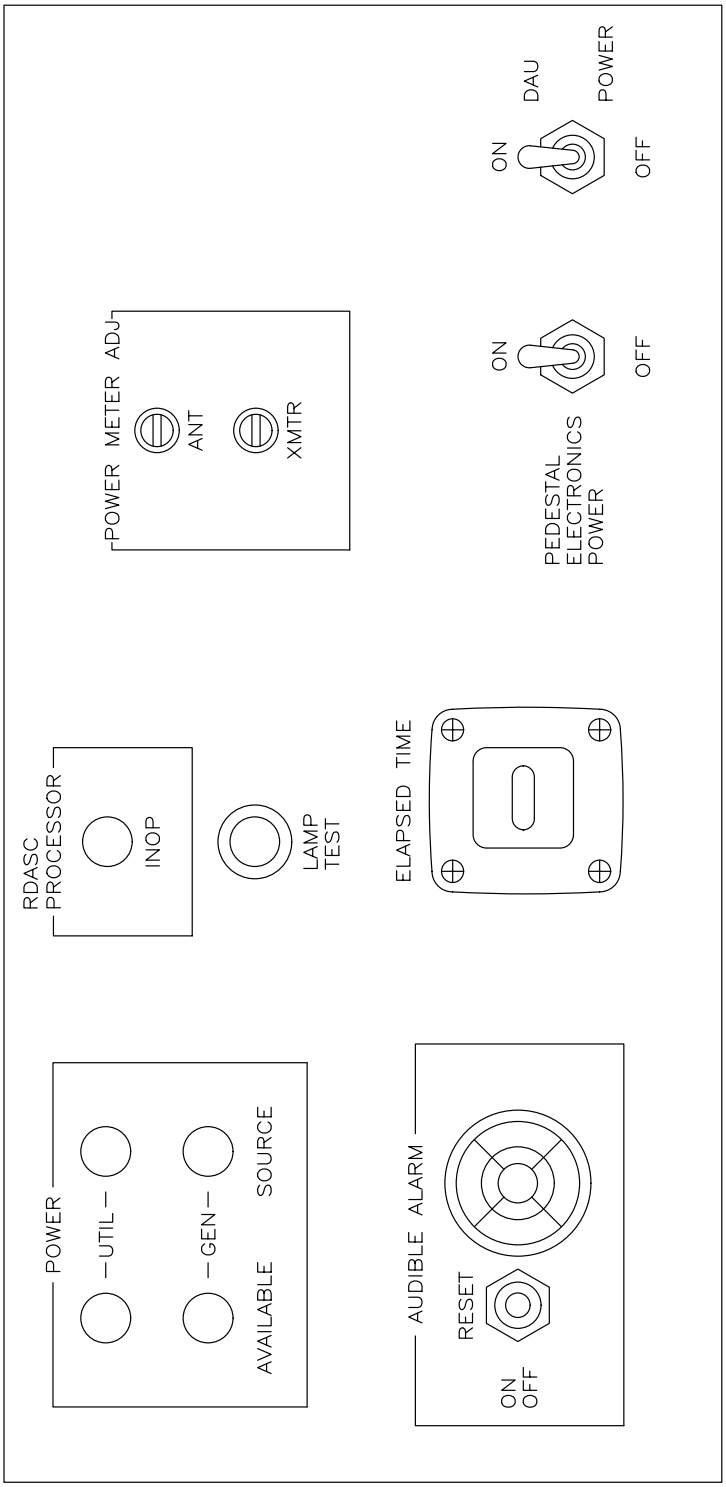


NX2213

Figure 6-82. RDA Maintenance Panel UD5A2

6-6.28 RECEIVER/SIGNAL PROCESSOR CALIBRATION.

This procedure is intended for use in both Single channel and Redundant configurations of the Radar Data Acquisition Unit (RDA). In the Redundant configuration, the controlling channel is connected to the antenna while the non-controlling channel is connected to a dummy load which simulates the antenna. **Unless otherwise specified, the procedures contained herein apply to the controlling channel only.**

In the Redundant configuration (either NWS or FAA), either Channel 2 or Channel 1 may be switched to be the controlling channel. In light of this, the procedures contained herein shall be performed on both channels of the Redundant configuration.

**NOTE**

Perform RDASOT calculations only on calibration data for the channel whose RDASOT capability is being used. DO NOT mix channels.

In the text of the procedures, the unit designations specified apply to the Single channel configuration which is the same as Channel 2 of the Redundant configuration. The following table specifies the unit designations for both channels of the Redundant configuration. When performing these procedures on Channel 1 of the Redundant configuration, substitute the corresponding reference designations into the procedure.

Table 6-25. Unit Designation Conversion

| Single Channel or Channel 2 of Redundant Config | Channel 1 (Redundant Config Only) |
|---|---|
| All UD4XX | UD104XX |
| UD2A3 | UD2A7 |
| UD2A4 | UD2A8 |
| UD2A5 | UD2A9 |
| UD2W5 | UD2W14 |
| UD2W6 | UD2W15 |
| W53 | W153 |
| W54 | W154 |
| 1W61 | 1W161 |
| 1AT4 | 1AT104 |

Part 1 of this procedure (paragraph 6-6.28.1) contains an analysis of on-line RDA performance data which is available at the RDA MMI terminals or MSCF workstation. It also contains Suncheck measurements which must be performed off-line using RDASOT.

- Much information pertinent to the calibration of the Receiver/Signal Processor is contained therein.

- A proper interpretation of this data will indicate the need for troubleshooting, changing adaptation data, or performing off-line calibration procedures.
- As explained in Section 5-4.9, there are many RDA alarms associated with the on-line calibration process which warn the user of conditions which require maintenance attention or compromise the validity of the base data products which are produced by the RDA.
- The RDA performance data constitute supplemental quantitative information which helps when performing further analysis of the RDA alarms.
- Figure 6-83 sheet 1, titled Reflectivity Calibration, depicts the critical paths used in the on-line and off-line reflectivity calibration. Sheet 2 provides the actual steps to be taken to analyze the performance data. Figure 6-83 provides the basis for taking maintenance action in this important area when necessary.
- Suncheck measurements will be performed to establish the integrity of the azimuth and elevation indications (Subtest 1) and also to record Subtest 2 gain measurements.

Part 2 (paragraph 6-6.28.2) contains the off-line calibration checks.

- The off-line calibration checks will be performed to establish the accuracy of the reflectivity products and the minimum discernible signal of the RDA.

Part 3 (paragraph 6-6.28.3) contains the off-line calibration procedures such as path loss measurements which are necessary to correct a detected calibration error.

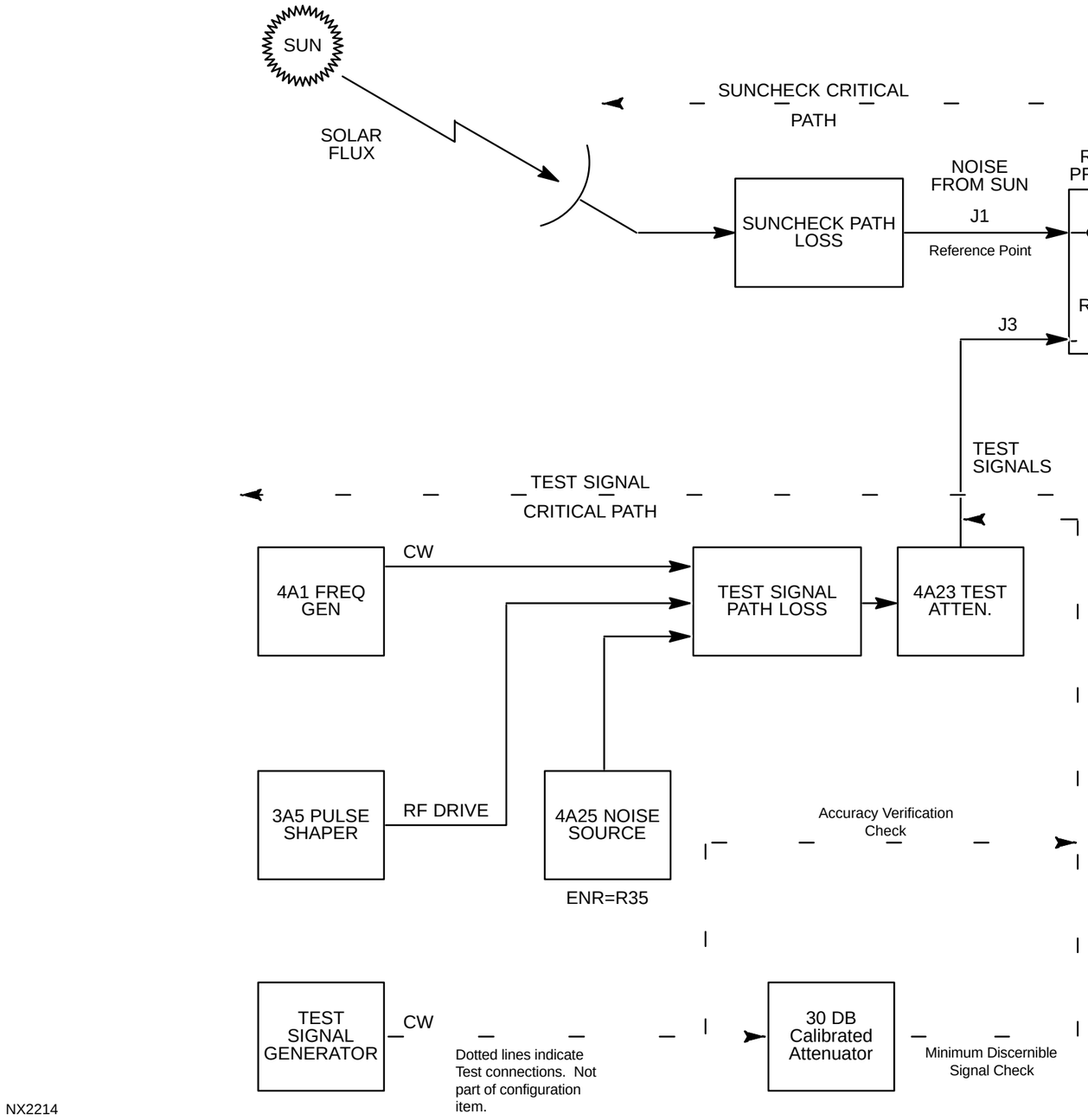


NX2214

SHARED PATH LOSS =
R73+R248+R247+R74+R77+R78+R79+R81+R83+R88+R91+R92+
IF ATTEN+R94+R98

SUNCHECK PATH LOSS = TR31+TR29+TR28+TR27+TR26+TR34+A1

TEST SIGNAL PATH LOSS
for CW=R34+R59+R63+ATTEN+R66+R69+R72
for RF DRIVE=R37(TR7)+R56+R58+R63+ATTEN+R66+R69+R72
for NOISE=R35+R60+R63+ATTEN+R66+R69+R72

Figure 6-83 Reflectivity Calibration Block Diagram (Sheet 1 of 5)

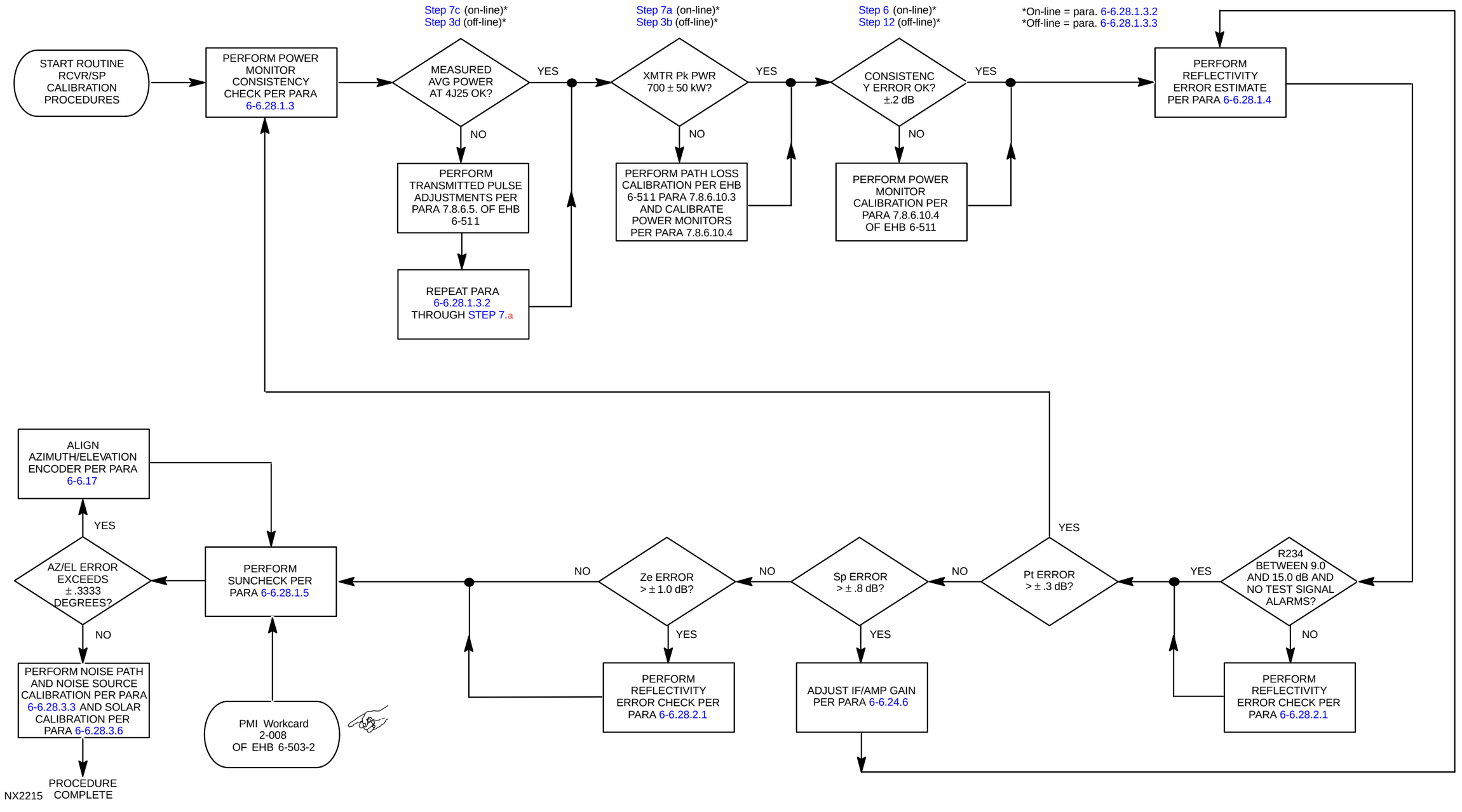


Figure 6-83. Reflectivity Calibration Flow Diagram (Sheet 2 of 5)

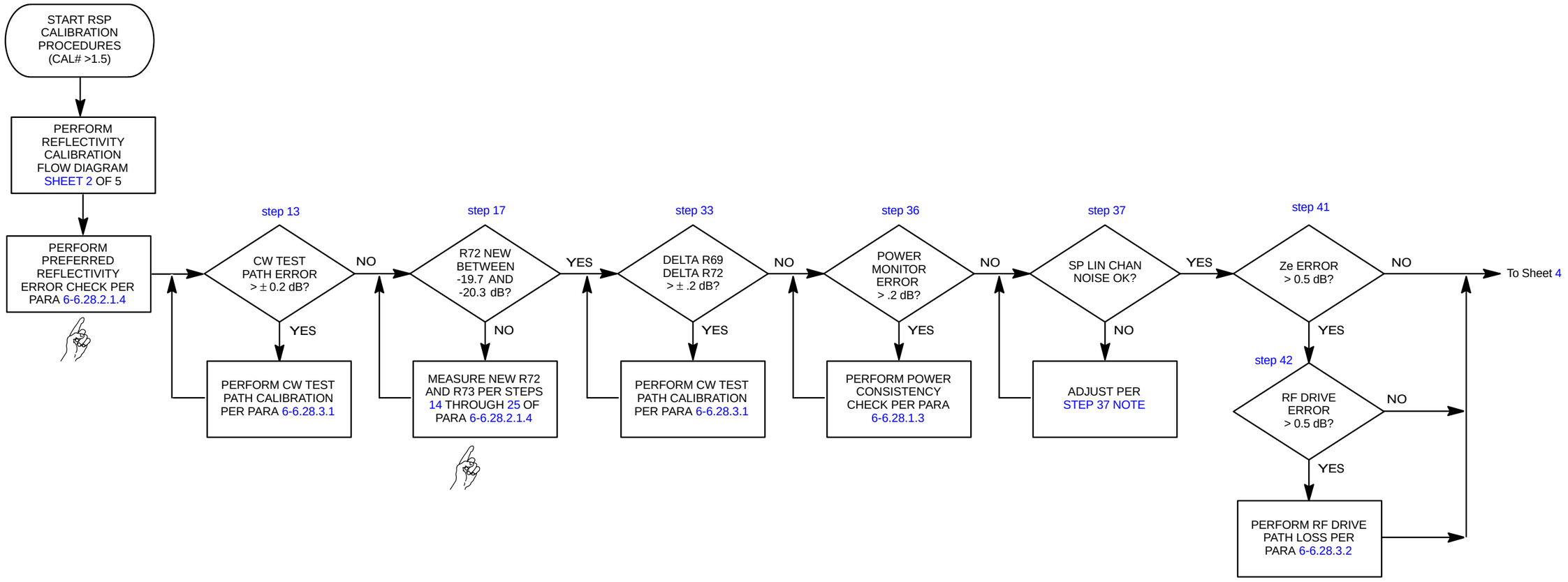


NX2216

Figure 6-83. Reflectivity Calibration Flow Diagram (Sheet 3 of 5)

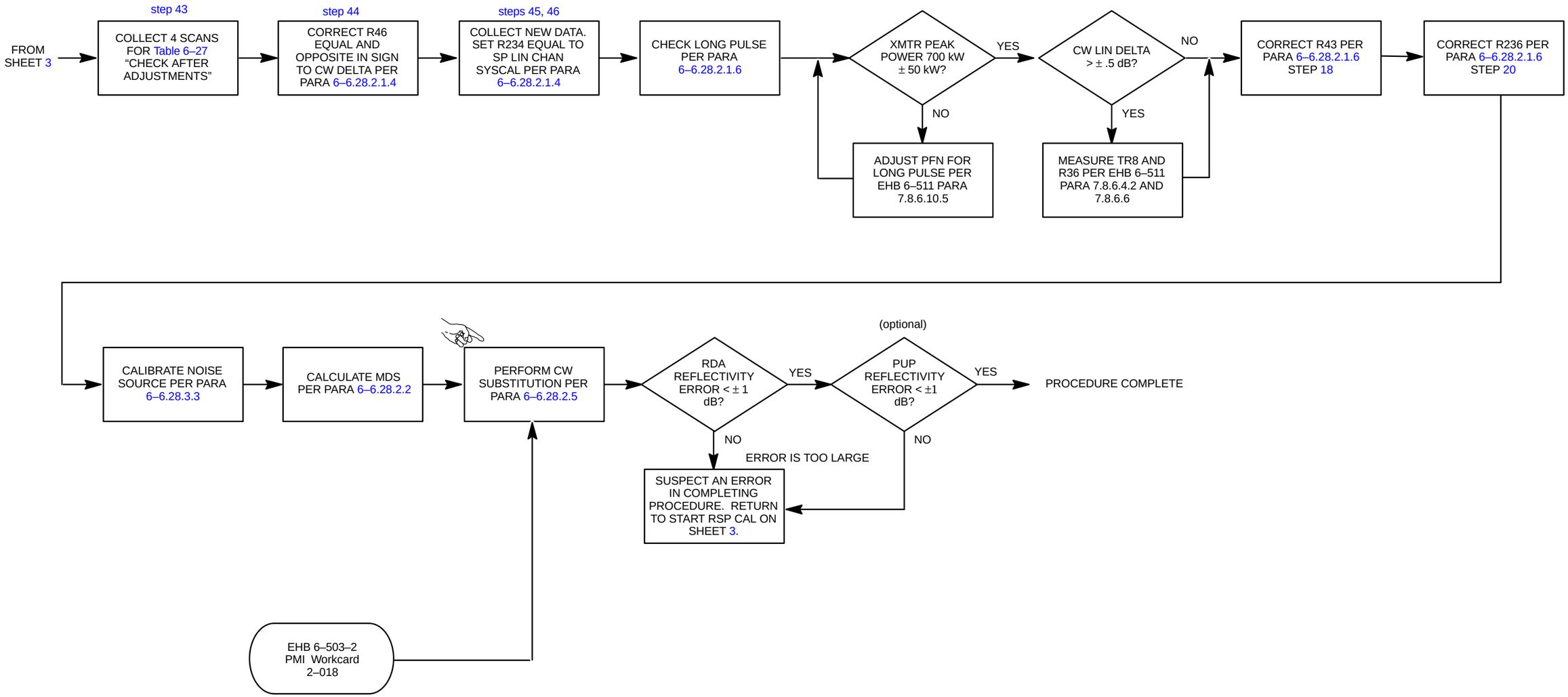


NX2217

Figure 6–83. Reflectivity Calibration Flow Diagram (Sheet 4 of 5)

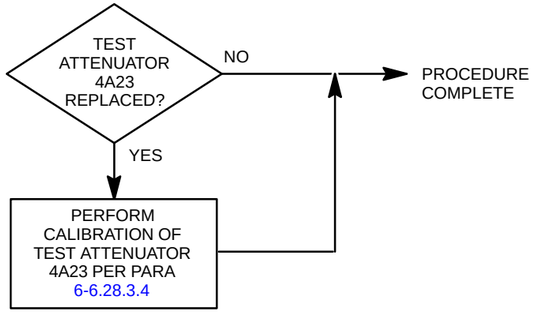


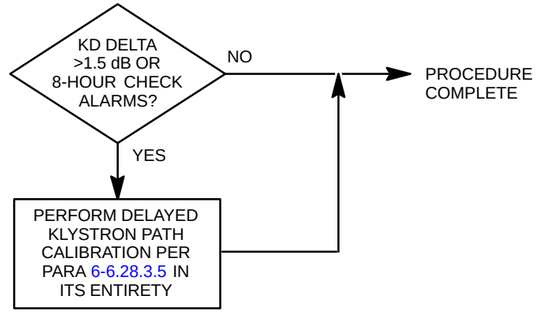


NX2218

Figure 6-83. Reflectivity Calibration Flow Diagram (Sheet 5 of 5)

6-6.28.1 Part 1 — Performance Data.

**NOTE**

In the following procedure it is critical to observe and record the positive or negative sign of the result. If signs are reversed, errors will result.

6-6.28.1.1 Reflectivity Calibration. The on-line reflectivity calibration is described in Section 5-4.9.1 . Begin the analysis at the "Start" block in the upper left corner of Figure 6-83, sheet 2.

Refer to Figure 6-83 sheet 1 for the following discussion:

- The CW test signal is derived from the Frequency Generator 4A1 and the RFD signals are derived from the Pulse Shaper 3A5 in the Transmitter.
- At the conclusion of a volume scan, the signals are inserted through the test signal path in turn and reflectivity measurements made on each.
- The purpose is to calibrate the shared path for each volume scan.
- Changes in the measured reflectivity of the test signals will be used to compensate the reflectivity measurements of radar echoes so that the weather products are displayed on the PUPs with the correct reflectivity values.
- The difference in the path calibration from the initial system calibration and the latest calibration (i.e., the last volume scan) is displayed as CAL#.
- The results of the four test signal measurements (i.e., CW, RFD1, RFD2, and RFD3) are accessible in RDA performance data by entering **DIPD<Tab>CAL<Return>** at the RDA Applications Terminal. The results are also accessible in the RDA PERF DATA window on MSCF HCI.
- Calibration Menus 1 and 2 in paragraphs 1.4.5.6.1 and 1.4.5.6.2 of the RDA User's Guide, NWS EHB 6-510-1, show the data which are displayed.

**NOTE**

There are entries for both LIN and LOG channels. At the present time, only the LIN channel is utilized for generating Base Data products. We will, therefore, concentrate on the LIN data.

**NOTE**

For each of the four test signals, both an expected value and a measured value are displayed. The expected value is derived from adaptation data and the measured value is obtained from measurements made on the test signals. The difference between the two is referred to as the delta of the test signal of interest. Ideally, the deltas should be zero.

**NOTE**

The CAL# and the previously mentioned test signal deltas give a good indication of changes in reflectivity from the initial calibration of the system and the latest calibration. The on-line calibration works well if the change in path loss occurs in the shared path, but it does not work if a change in path loss occurs in the test signal critical path. In fact, if path losses occur in the critical path, erroneous reflectivity corrections are inserted resulting in the introduction of errors in the PUP displayed products. Fortunately, the probability of this happening is relatively small.

- If the CAL# is greater than ±1.5 dB or if the reflectivity error estimate is greater than 1.0 dB, the cause must be identified and corrected. Procedures for doing this are indicated on sheets 2 through 5 of Figure 6-83 and are contained in Parts 2 and 3 of this paragraph. If the CAL# and DIPD-CAL deltas are good, proceed to the next paragraph to check the DIPD-CHK deltas.

6-6.28.1.2 Reflectivity Calibration Check. In addition to the reflectivity calibration performed every volume scan, a reflectivity calibration check using test signals derived from the klystron output is performed.

- The calibration check is performed on-line upon startup and every 8 hours thereafter.

**NOTE**

The calibration check provides another way to calibrate the critical and shared path and has the advantage that it is independent of antenna power.

- For the reflectivity calibration check, the three test signal measurements (KD1, KD2, and KD3) are accessible in RDA performance data by entering **DIPD<Tab>CHK<Return>** at the RDA Applications Terminal command and parameter lines. The measurements are also accessible in the RDA PERF DATA window on MSCF HCI.

- The Calibration Check menu in paragraph 1.4.5.7 of the RDA Users Guide, NWS EHB 6-510-1, shows the data which is displayed.

- If the DIPD-CHK deltas (KD1, 2, and 3) are greater than ±1.5 dB, the cause must be identified and corrected. Procedures for doing this are contained on sheet 5 of Figure 6-83.

6-6.28.1.3 Power Monitor Consistency Check. There are two power monitors which measure the average power at two points in the transmitted signal circuits as follows:

- Power Monitor 4A26, located in the receiver cabinet, monitors the transmitter power output.

- Power Monitor 2A5, located on the antenna pedestal very near the antenna feed horn, monitors the antenna power output.
- Both the average power and the peak power, which is derived from the average of each monitor, can be viewed by entering **DIPD<Tab>XMT<Return>** on the RDA Applications Terminal command and parameter lines.
- In addition, the difference between the two is displayed as M/WAVE LOSS expressed in dB.
- This microwave loss should be equal to the path loss from the klystron output to the antenna.

6–6.28.1.3.1 Equipment and Tools Required.

1. Calculator, scientific

6–6.28.1.3.2 On–line Procedure. This power monitor consistency procedure may be done while remaining on–line, but requires some hand calculation. Paragraph 6–6.28.1.3.3 describes a procedure in which the calculations are performed by RDASOT, but it requires interruption of on–line operation. This latter procedure is recommended if the RDA can be taken off–line. Check the consistency of the two power monitors while remaining on–line as follows:

1. With the system operating normally in OPER mode for at least 30 minutes, enter **ICRA<Tab>** ***password*** **<Return>** at the command and parameter lines of the RDA Applications Terminal. The default password is "*HIGH*".
2. Enter all of the adaptation parameter values listed into Table 6–26. They are obtained as follows:
   a. Enter **SF<Return>** to select file.
   b. Enter **C<Return>** to select current adaptation data.
   c. Enter **S<Return>** to access the Signal Processor adaptation data.

**NOTE**

Adaptation type parameters are alphanumerically referenced in procedure 6–6.28. Parameters are designated by abbreviating the type of data preceding the item number (e.g. A1 – A10, SPS1 – SPS174, etc., or reference Table 6–26.)

   d. Enter **F<Return>** to page forward.
   e. Copy SPS13 into Table 6–26 as original value.
   f. Enter **A<Return>** to return to the Adaptation Edit Control menu.
   g. Enter **R<Return>** to access Receiver adaptation data.
   h. Copy the required Receiver data into Table 6–26.

i. Enter **A<Return>** to return to the Adaptation Edit Control menu.

j. Enter **TR<Return>** to access Transmitter adaptation data.

k. Copy the required Transmitter data into Table 6–26.

l. Enter **A<Return>** to return to the Adaptation Edit Control menu.

m. DELETED

n. DELETED

3. Record the following adaptation data parameters from Table 6–26:

| Parameter | Path Loss Description | Channel _____ Path Loss Value |
|---|---|---|
| TR17 | PL A6 Arc Detector | _____ |
| TR18 | PL WG2 Harmonic Filter | _____ |
| TR19 | PL WG4 Circulator | _____ |
| TR20 | PL WG6 Spectrum Filter | _____ |
| TR21 | PL W/G Kly to W/G SW | _____ |
| TR22 | PL 1DC1 Coupler Straight Thru | _____ |
| TR24 | PL W/G SW | _____ |
| TR25 | PL W/G SW to AZ Rotary Joint | _____ |
| TR26 | PL AZ Rotary Joint | _____ |
| TR27 | PL W/G AZ to EL Joints | _____ |
| TR28 | PL EL Rotary Joint | _____ |
| TR29 | PL 2DC1 Ant Coupler Straight Thru | _____ |
| TR31 | PL W/G Coupler to Antenna | _____ |
| | SUM | _____ |

Page 6–876 intentionally left blank.

Table 6-26. Adaptation Data Required for RDA Calibration

(May be copied and used as a worksheet.)

**SITE ID** _____ **DATE** _____

**CHANNEL** _____

| Parameter | Original | Final | Parameter | Original | Final |
|---|---|---|---|---|---|
| A1 | _____ | _____ | TR3 | _____ | _____ |
| A2 | _____ | _____ | TR5 | _____ | _____ |
| | | | TR6 | _____ | _____ |
| SPS13 | _____ | _____ | TR7 | _____ | _____ |
| | | | TR8 | _____ | _____ |
| R7 | _____ | _____ | TR9 | _____ | _____ |
| R34 | _____ | _____ | TR10 | _____ | _____ |
| R35 | _____ | _____ | TR17 | _____ | _____ |
| R36 | _____ | _____ | TR18 | _____ | _____ |
| R37 | _____ | _____ | TR19 | _____ | _____ |
| R43 | _____ | _____ | TR20 | _____ | _____ |
| R44 | _____ | _____ | TR21 | _____ | _____ |
| R46 | _____ | _____ | TR22 | _____ | _____ |
| R47 | _____ | _____ | TR23 | _____ | _____ |
| R48 | _____ | _____ | TR24 | _____ | _____ |
| R49 | _____ | _____ | TR25 | _____ | _____ |
| R50 | _____ | _____ | TR26 | _____ | _____ |
| R51 | _____ | _____ | TR27 | _____ | _____ |
| R53 | _____ | _____ | TR28 | _____ | _____ |
| R55 | _____ | _____ | TR29 | _____ | _____ |
| R56 | _____ | _____ | TR31 | _____ | _____ |
| R57 | _____ | _____ | TR32 | _____ | _____ |
| R58 | _____ | _____ | TR34 | _____ | _____ |
| R59 | _____ | _____ | | | |
| R60 | _____ | _____ | | | |
| R63 | _____ | _____ | | | |
| R66 | _____ | _____ | | | |
| R69 | _____ | _____ | | | |
| R72 | _____ | _____ | | | |
| R73 | _____ | _____ | | | |
| R74 | _____ | _____ | | | |
| R77 | _____ | _____ | | | |
| R94 | _____ | _____ | | | |
| R96 | _____ | _____ | | | |
| R122 | _____ | _____ | | | |
| R234 | _____ | _____ | | | |
| R236 | _____ | _____ | | | |
| R247 | _____ | _____ | | | |
| R248 | _____ | _____ | | | |

4. Sum up the path losses from step 3. These losses are negative values, but for this procedure the total is considered an absolute (positive) value for comparison to the M/WAVE LOSS.

   M/WAVE LOSS $_{(expected)}$ = _____ dB

**NOTE**

This value is the expected M/WAVE LOSS.

5. Enter **A<Return>** for the Adaptation Edit Control menu. Enter **SC<Return>** to save changes to disk. Enter **M<Return>** to return to the Main Menu.

   a. Enter **DIPD<Tab>XMT<Return>** on the command and parameter lines.

   b. Record the M/WAVE LOSS displayed.

      M/WAVE LOSS $_{(measured)}$ = _____ dB

6. Calculate the Consistency Error as: Power Monitor Consistency Error = M/WAVE LOSS $_{(measured)}$ - M/WAVE LOSS $_{(expected, absolute value)}$.

   Consistency Error = _____$_{(measured)}$ - _____$_{(expected)}$ = _____ dB

7. Evaluate transmitter power as follows:

   a. Record the XMTR PK PWR from the displayed Performance Data screen.

      XMTR PK PWR = _____ kW

   b. Calibrate the power meter and HP8481A power sensor per paragraph 6-6.22 . Remove the terminator connector from 4J25 (RF SAMPLE) from the side of the UD4 cabinet. Connect the power sensor to 4J25.

   c. With the system in the OPERATE mode, VCP21, notice on the maintenance display the PRF# for each elevation cut is indicated in the RDA Summary section of the display. When the PRF# indicates ",5" (this occurs at an elevation of 0.5 degrees as indicated in the EL portion of the display), record the power meter reading below. Note that the power measured by the meter varies as the PRF varies. It is important to record the power only when the PRF# indicates ",5".

      $P_{@4J25}$ average = _____ dBm

   d. If the reading at 4J25 is between 7.53 and 8.73 dBm with no spectrum filter installed (TR20=0) or between 7.33 and 8.53 with a spectrum filter installed, the transmitter probably has an actual peak power between 650 and 750 kW which is the normal power output. In this case, proceed to step 8 below. If the reading at 4J25 is outside this range, either the transmitter power is actually out of specification or the path loss from the klystron to 4J25 is higher or lower than expected. Proceed to step e below.

e. If the power measured at 4J25 is outside the range stated in the above step, the average power must be measured at the output of the 3 dB high power attenuator 1AT4, which is located above the transmitter cabinet. Place the system in the Standby mode by entering **STBY<Return>** on the command line. Remove the cable connected to 1AT4 and connect the power sensor through a calibrated 20 dB attenuator to 1AT4 and repeat the average power measurement as described in step c above. If the average power at this point is between 21.32 and 22.52 with no spectrum filter installed or between 21.12 and 22.32 with a spectrum filter installed, the actual transmitter power is probably between 650 and 750 kW, but the path loss from 1AT4 output and 4J25 requires calibration. When evaluating the power at 1AT4 output, be careful to properly account for the calibrated attenuator in series with the power sensor. The meter reading should be increased by the amount of attenuation in the attenuator. If the average power at 1AT4 output is outside the range specified, the actual transmitter power is probably outside the range of 650 to 750 kW peak power. Regardless, proceed to the next step.

8. Evaluate the power measurements as follows:

   a. If the actual transmitter peak power is outside the range of 650 to 750 kW as indicated by the average measurements made at 4J25 and/or 1AT4 output, it will be necessary to perform the transmitter tuning procedure specified in Transmitter Maintenance Manual NWS EHB 6–511 paragraph 7.8.6.5 with special emphasis on the output power adjustment, then repeat this paragraph.

   b. After having established that the actual power output is in specification, if the indicated XMTR PK PWR of step 7.a is outside the bounds of 650 to 750 kW, calibrate the power monitors per paragraph 7.8.6.10.4 of NWS EHB 6–511. This will establish both the actual and indicated transmitter peak power between 650 and 750 kW. If corrective action was required, repeat the procedure through step 7.a.

   c. If the final Consistency Error of step 6 (after all other corrective action is taken) is outside the range of –.2 dB to +.2 dB, calibrate the power monitors per paragraph 7.8.6.10.4 of NWS EHB 6–511. This will establish the validity of the actual and indicated transmitter and antenna peak power. This is required for good reflectivity accuracy.

   d. If all the above conditions are met, this procedure is complete.

6–6.28.1.3.3 Off–line Procedure. This procedure checks the Power Monitor Consistency with the RDASOT performing the required calculations, but requires taking the system off–line. This procedure is recommended if operational considerations permit.

1. With the system operating normally in the OPER mode for at least 30 minutes, enter **ICRA<Tab>** ***password*** **<Return>** at the command and parameter lines of the RDA Applications Terminal. The default password is ***HIGH***.

2. Enter all of the adaptation parameter values listed into Table 6–26 as original values. They are obtained as follows:

a. Enter **SF<Return>** to select file.

b. Enter **C<Return>** to select current adaptation data.

c. Enter **S<Return>** to access the Signal Processor adaptation data.

**NOTE**

Adaptation type parameters are alphanumerically referenced in procedure 6–6.28. Parameters are designated by abbreviating the type of data preceding the item number (e.g. A1 – A10, SPS1 – SPS174, etc., or reference Table 6–26.)

d. Enter **F<Return>** to page forward.

e. Copy SPS13 into Table 6–26 as original value.

f. Enter **A<Return>** to return to the Adaptation Edit Control menu.

g. Enter **R<Return>** to access Receiver adaptation data.

h. Copy the required Receiver data into Table 6–26 as original values.

i. Enter **A<Return>** to return to the Adaptation Edit Control menu.

j. Enter **TR<Return>** to access Transmitter adaptation data.

k. Copy the required Transmitter data into Table 6–26 as original values.

l. Enter **A<Return>** to return to the Adaptation Edit Control menu.

m. DELETED

n. DELETED

Page 6–881 intentionally left blank.

3. Enter **A<Return>** for the Adaptation Edit Control menu. Enter **SC<Return>** to save changes to disk. Enter **M<Return>** to return to the Main Menu.

   a. Enter **DIPD<Tab>XMT<Return>** on the command and parameter lines.

   b. Record the XMTR PK PWR.

      XMTR PK PWR = _____ kW

      Record the M/WAVE LOSS.

      M/WAVE Loss $_{(measured)}$ = _____ dB

   c. Calibrate the power meter and HP8481A power sensor per paragraph 6–6.22. Remove the terminator connector from 4J25 (RF SAMPLE) from the side of the UD4 cabinet. Connect the power sensor to 4J25.

   d. With the system in the OPERATE mode, VCP21, notice on the maintenance display that the PRF# for each elevation cut is indicated in the RDA Summary section of the display. When the PRF# indicates ",5" (this occurs at an elevation of 0.5 degrees as indicated in the EL portion of the display), record the power meter reading below. Note that the power measured by the meter varies as the PRF varies. It is important to record the power only when the PRF# indicates ",5".

      $P_{@4J25}$ average = _____ dBm

   e. If the reading at 4J25 is between 7.53 and 8.73 dBm with no spectrum filter installed (TR20=0) or between 7.33 and 8.53 with spectrum filter installed, the transmitter probably has an actual peak power between 650 and 750 kW which is the normal power output. In this case, proceed to step 4 of this paragraph. If the reading at 4J25 is outside this range, either the transmitter power is actually out of specification or the path loss from the klystron to 4J25 is higher or lower than expected. Proceed to step f of this paragraph.

   f. If the power measured at 4J25 is outside the range stated in the above step, the average power must be measured at the output of the 3 dB high power attenuator 1AT4, which is located above the transmitter cabinet. Place the system in the Standby mode by entering **STBY<Return>** on the command line. Remove the cable connected to 1AT4 and connect the power sensor through a calibrated 20 dB attenuator to 1AT4 and repeat the average power measurement as described in step d above. If the average power at this point is between 21.32 and 22.52 with no spectrum filter installed or between 21.12 and 22.32 with a spectrum filter installed, the actual transmitter power is probably between 650 and 750 kW, but the path loss from 1AT4 output and 4J25 requires calibration. When evaluating the power at 1AT4 output, be careful to properly account for the calibrated attenuator in series with the power sensor. The meter reading should be increased by the amount of attenuation in the attenuator. If the average power at 1AT4 output is outside the range specified, the actual transmitter power

is probably outside the range of 650 to 750 kW peak power. Regardless, proceed to the next step.

4. Evaluate the power measurements as follows:

   a. If the actual transmitter peak power is outside the range of 650 to 750 kW as indicated by the average measurements made at 4J25 and/or 1AT4 output, it will be necessary to perform the transmitter tuning procedure specified in Transmitter Maintenance Manual NWS EHB 6-511 paragraph 7.8.6.5 with special emphasis on the output power adjustment, then repeat this paragraph through step 3.b.

   b. After having established that the actual power output is in specification, if the indicated XMTR PK PWR of step 3.b is outside the bounds of 650 to 750 kW, calibrate the power monitors per paragraph 7.8.6.10.4 of NWS EHB 6-511. This will establish both the actual and indicated transmitter peak power between 650 and 750 kW. If corrective action is required, repeat the procedure through step 3.b and then proceed to step 5.

5. To calculate the Power Monitor Consistency Error, terminate the operational software by entering **TERP<Tab>** ***password*** **<Return>** at the RDA Applications Terminal command and parameter lines.

6. Press the **<Shift>** and **<Port>** keys **simultaneously** to switch to the RDA System Console. When the tasks cancel, bring up the RDASOT program by performing the following steps; enter:

| Step | Operator Action | System Response/Comments |
|---|---|---|
| a. | **RDASOT<Return>** | RDASOT Main Menu (Mode Selection Menu for Redundant sites) is displayed. |
| b. | **1<Return>**<br>Redundant sites only | To select FULL mode for this procedure at Redundant sites. |
| c. | **3<Return>** | To select Calibration Menu. |
| d. | **4<Return>** | To select RCVR/SP Calibration Routines; RSP Calibration Selection Menu is displayed. |
| e. | **5<Return>** | To select Power Monitor Consistency. |

7. At the M/WAVE LOSS prompt, enter the final M/WAVE LOSS measured value recorded in step 3.b.

8. Note and record the following values displayed on the terminal:

   EXPECTED M/WAVE LOSS = _____

   MONITOR CONSISTENCY ERROR = _____

a. If the Monitor Consistency Error at this point is outside the range of -.2 dB to +.2 dB, calibrate the power monitors per NWS EHB 6-511 paragraph 7.8.6.10.4. This will establish the validity of the actual and indicated transmitter and antenna peak power. This is required for good reflectivity accuracy.

b. If all the conditions of steps 4 and 7 are met, this procedure is complete.

9. Enter a series of **Ø<Return>** until RDASOT terminates.

10. Enter **RDAUP<Return>** at the RDA System Console.

11. Press the **<Shift>** and **<Port>** keys **simultaneously** to switch to the RDA Applications Terminal.

12. At the Applications Terminal, enter **OPER<Return>** when the Main Menu indicates STBY mode.

6-6.28.1.4 Reflectivity Error Estimate. From the data that will be collected in Table 6-27, it is possible to estimate the Reflectivity Error. The estimate calculated in the following procedure is accurate to approximately ±1 dB, assuming that the RDA was calibrated properly at some previous date.

6-6.28.1.4.1 Equipment and Tools Required.

1. Calculator, scientific

6-6.28.1.4.2 Reflectivity Error Estimate Data Collection Procedure. The data parameters indicated in Table 6-27 are collected at the RDA or RPG with the system up and operating normally in VCP21 (Short Pulse operation). Proceed as follows:

**NOTE**

From the data collected in Table 6-27, it is possible to estimate the Reflectivity Error. The estimate calculated in this paragraph is accurate to approximately ±1 dB assuming that the RDA was calibrated properly at some previous date. This is a good assumption if R234 is in the range of 9.0 to 15.0 *and the alarms LIN CHAN TEST SIGNALS DEGRADED and LIN CHAN RF DRIVE TST SIGNAL DEGRADED are absent*. If R234 is outside this range, *or one of the alarms is present*, an estimation of the Reflectivity Error is not productive. If R234 is outside this range or either of the alarms is present, proceed directly to paragraph 6-6.28.2.1 to perform the precise off-line Reflectivity Error check. If R234 is inside this range and the alarms are not present, proceed as follows to perform the on-line error estimation.

1. Enable local RDA control from the MSCF as follows:

a. In the RPG Control/Status window (HCI Main Window) (Active/Controlling channel only for FAA Redundant systems), click on the Control block in the

RDA container to open the RDA Control/Status window and observe the RDA Control: field. The RDA Control: field should indicate RPG assuming the RPG is in control.

b. In the RDA Control area of the RDA Control/Status window, click on **Enable Local (RDA)** to allow control at the RDA.

c. Click on the **Close** button in the upper left hand corner of the RDA Control/Status window to close the window.

2. At the RDA Applications Terminal, enter **RELC<Return>** on the command line to request local control.

3. Ensure the system is collecting weather data in VCP21. If not, enter **STBY<Return>**, then enter **SELP<Space>21<Return>**, then enter **OPER<Return>** on the command line.

4. If the system has been running in VCP21, begin data collection. Otherwise, after about 12 minutes, the second volume coverage pattern should be complete. This is recognizable by the fact that the EL position should change from 19.5 degrees down to 0.5 degrees. When this happens, collect the data required by Table 6-27 by using the Display Performance Data (DIPD) capability of the RDA.

| RDA Command Entry | Data Parameter |
|---|---|
| None required | CAL# |
| **DIPD<Tab>REC<Return>** | SHORT PULSE, LIN CHAN NOISE |
| ″ | SYSTEM NOISE TEMP |
| **DIPD<Tab>XMT<Return>** | ANT PK PWR |
| ″ | XMTR PK PWR |
| ″ | M/WAVE LOSS |
| **DIPD<Tab>CAL<Return>** | CW LIN TGT EXPECTED AMP |
| ″ | CW LIN TGT MEASURED AMP |
| ″ | RFD1 LIN TGT EXPECTED AMP |
| ″ | RFD1 LIN TGT MEASURED AMP |
| ″ | RFD2 LIN TGT EXPECTED AMP |
| ″ | RFD2 LIN TGT MEASURED AMP |
| ″ | RFD3 LIN TGT EXPECTED AMP |
| ″ | RFD3 LIN TGT MEASURED AMP |
| ″ and **PAGF<Return>** | SHORT PULSE, LIN CHAN SYSCAL |

5. Record the above data in Table 6-27 after each of four volume scans. When the data for four volume scans are collected, average the data as indicated on Table 6-27 and record the averages in the table. The averaging of data is only necessary if you will be performing the on-line calculation procedure (paragraph 6-6.28.1.4.3 ). If you perform the off-line calculation procedure (paragraph 6-6.28.1.4.4 ), RDASOT will calculate the averages for you.

6. A typical example of the data to be taken before and after corrective action has been accomplished is contained in Table 6-27.

Page 6-886 intentionally left blank.

Table 6-27. On-Line Calibration Data, Short Pulse

(May be copied and used as a worksheet.)

**CHANNEL** _____

**CHECK BEFORE ADJUSTMENTS**

| Parameter | Scan1 | Scan2 | Scan3 | Scan4 | AVER | |
|---|---|---|---|---|---|---|
| CAL# | _____ | _____ | _____ | _____ | _____ | R234 =_____ |
| SP LIN NOISE | _____ | _____ | _____ | _____ | _____ | |
| NOISE TEMP | _____ | _____ | _____ | _____ | _____ | R236 = _____ |
| ANT PK PWR | _____ | _____ | _____ | _____ | _____ | |
| XMTR PK PWR | _____ | _____ | _____ | _____ | _____ | XMTR PWR ERROR Est. |
| M/WAVE LOSS | _____ | _____ | _____ | _____ | _____ | (Pt Error) =_____ |
| CW LIN EXP | _____ | _____ | _____ | _____ | _____ | SHARED PL ERROR Est. |
| MEAS | _____ | _____ | _____ | _____ | _____ | (SP Error) =_____ |
| delta(MEAS-EXP) | _____ | _____ | _____ | _____ | _____ | REFLECTIVITY ERROR Est. |
| RFD1 LIN EXP | _____ | _____ | _____ | _____ | _____ | (Ze Error) =_____ |
| MEAS | _____ | _____ | _____ | _____ | _____ | |
| delta(MEAS-EXP) | _____ | _____ | _____ | _____ | _____ | |
| RFD2 LIN EXP | _____ | _____ | _____ | _____ | _____ | |
| MEAS | _____ | _____ | _____ | _____ | _____ | |
| delta(MEAS-EXP) | _____ | _____ | _____ | _____ | _____ | |
| RFD3 LIN EXP | _____ | _____ | _____ | _____ | _____ | |
| MEAS | _____ | _____ | _____ | _____ | _____ | |
| delta(MEAS-EXP) | _____ | _____ | _____ | _____ | _____ | |
| SP LIN SYSCAL | _____ | _____ | _____ | _____ | _____ | |

**CHECK AFTER ADJUSTMENTS**

| Parameter | Scan1 | Scan2 | Scan3 | Scan4 | AVER | |
|---|---|---|---|---|---|---|
| M/WAVE LOSS | _____ | _____ | _____ | _____ | _____ | R234 NEW = _____ |
| CW LIN EXP | _____ | _____ | _____ | _____ | _____ | |
| MEAS | _____ | _____ | _____ | _____ | _____ | |
| delta(MEAS-EXP) | _____ | _____ | _____ | _____ | _____ | |
| SP LIN SYSCAL | _____ | _____ | _____ | _____ | _____ | |
| SP LIN NOISE | _____ | _____ | _____ | _____ | _____ | |

Table 6-27. On-Line Calibration Data, Short Pulse (continued)

**CHECK AFTER ADJUSTMENTS**

| Parameter | Scan1 | Scan2 | Scan3 | Scan4 | AVER |
|---|---|---|---|---|---|

**NOTE**

If one particular scan of data appears significantly different in comparison to the other three, repeat data collection, substitute in the new scan's data, and recalculate averages. For example, if four CW LIN deltas were -.3, +.2, -.4, and -.5 dB, then the scan with the +.2 would be suspect and another scan of data should be recorded and averaged in its place.

**EXAMPLE:**
**CHECK BEFORE ADJUSTMENTS**

| Parameter | Scan1 | Scan2 | Scan3 | Scan4 | AVER | |
|---|---|---|---|---|---|---|
| CAL# | +2.43 | +2.35 | +2.30 | +2.45 | +2.38 | R234 = +10.2 |
| SP LIN NOISE | .235E-5 | .235E-5 | .234E-5 | .235E-5 | .235E-5 | |
| NOISE TEMP | 338deg | 335deg | 340deg | 337deg | 338deg | R236 = -6.40 |
| ANT PK PWR | 170kW | 179kW | 178kW | 182kW | 177.3kW | |
| XMTR PK PWR | 414kW | 417kW | 406kW | 406kW | 410.8kW | XMTR PWR ERROR Est. |
| M/WAVE LOSS | 3.9 | 3.7 | 3.6 | 3.5 | 3.68 | (Pt Error) =_____ |
| CW LIN EXP | 37.1 | 37.5 | 37.7 | 38.0 | | SHARED PL ERROR Est. |
| MEAS | 36.5 | 37.5 | 37.5 | 38.0 | | (SP Error) =_____ |
| delta(MEAS-EXP) | -0.64 | 0 | -0.2 | 0 | -0.21 | REFLECTIVITY ERROR Est. |
| RFD1 LIN EXP | 29.9 | 29.9 | 29.7 | 29.7 | | (Ze Error) =_____ |
| MEAS | 29.5 | 30.0 | 30.0 | 29.5 | | |
| delta(MEAS-EXP) | -0.4 | +0.1 | +0.3 | -0.2 | -0.05 | |
| RFD2 LIN EXP | 42.1 | 42.2 | 42.0 | 42.0 | | |
| MEAS | 42.0 | 42.5 | 42.0 | 42.0 | | |
| delta(MEAS-EXP) | -0.1 | +0.3 | 0 | 0 | +0.05 | |
| RFD3 LIN EXP | 55.1 | 55.1 | 54.9 | 54.9 | | |
| MEAS | 54.5 | 55.0 | 55.0 | 54.5 | | |
| delta(MEAS-EXP) | -0.6 | -0.1 | +0.1 | -0.4 | -0.25 | |
| SP LIN SYSCAL | 12.63 | 12.55 | 12.50 | 12.65 | 12.58 | |

**CHECK AFTER ADJUSTMENTS**

| Parameter | Scan1 | Scan2 | Scan3 | Scan4 | AVER | |
|---|---|---|---|---|---|---|
| M/WAVE LOSS | 3.4 | 3.4 | 3.3 | 3.5 | 3.4 | R234 NEW =10.73 |

Table 6-27. On-Line Calibration Data, Short Pulse (continued)

**CHECK AFTER ADJUSTMENTS**

| Parameter | Scan1 | Scan2 | Scan3 | Scan4 | AVER |
|---|---|---|---|---|---|
| CW LIN EXP | 39.1 | 39.6 | 40.1 | 41.2 | |
| MEAS | 39.0 | 39.5 | 40.0 | 41.5 | |
| delta(MEAS-EXP) | -0.1 | -0.1 | -0.1 | +0.3 | 0 |
| SP LIN SYSCAL | 10.73 | 10.71 | 10.72 | 10.73 | 10.72 |
| SP LIN NOISE | .109E-5 | .190E-5 | .189E-5 | .191E-5 | .190E-5 |

**NOTE**

If one particular scan of data appears significantly different in comparison to the other three, repeat data collection, substitute in the new scan's data, and recalculate averages. For example, if four CW LIN deltas were -.3, +.2, -.4, and -.5 dB, then the scan with the +.2 would be suspect and another scan should be recorded and averaged in its place.

6-6.28.1.4.3 On-line Reflectivity Error Estimate Calculation Procedure. This paragraph describes the hand calculations required to calculate the Reflectivity Error Estimate while keeping the system on-line. Paragraph 6-6.28.1.4.4 describes a method for making the required calculations with the aid of RDASOT. This latter procedure is recommended if operational considerations permit the system to be taken off-line.

1. In the following calculations, round off dB calculations to the nearest hundredth. Calculate the M/WAVE $LOSS_{(expected)}$ per paragraph 6-6.28.1.3.2 or paragraph 6-6.28.1.3.3 . Enter below as an absolute (positive) value.

   M/WAVE $LOSS_{(expected)}$ = +_____

2. Calculate the expected ratio of Transmitter Power to Antenna Power as follows:

   Ratio = Antilog (M/WAVE LOSS/10)

   Enter ratio _____ (See example in step 10).

3. Calculate the expected Antenna Peak Power as follows:

   $Ant\ Peak\ Power_{(expected)}$ = 700 kW /Ratio

   = 700 kW / _____

   = _____ kW (See example in step 10).

   where 700 kW is the expected peak power at the Klystron.

4. Calculate the Transmitted Power error as follows:

Pt error = 10 log(Ant Peak Power (expected)/Ant Peak Power (average from Table 6-27)

= 10 log( _____kW/_____ kW)

= _____ dB (See example in step 10).

Ant Peak Power average is obtained from Table 6-27. The Pt error will be a negative value if measured value is greater than the expected value.

5. If the Pt error is inside the range of -0.3 dB (-50 kW) to +0.3 dB (+50 kW), proceed to the next step. If the Pt error is outside the range of -0.3 dB (-50 kW) to +0.3 dB (+50 kW), verify power monitor consistency using paragraph 6-6.28.1.3. If adjustments are required by paragraph 6-6.28.1.3, perform the adjustments (will require off-line system time) and repeat this procedure.

6. Calculate the change in Shared Path Loss as follows:

SP error = 10 log ( 0.200E-05/SHORT PULSE, LIN CHAN NOISE (average))

= 10 log ( 0.200E-05/_____ )

= _____ dB (See example in step 10).

SHORT PULSE, LIN CHAN NOISE (average) is obtained from Table 6-27. 0.200E-05 is the expected SHORT PULSE, LIN CHAN NOISE. The SP error will be negative if the measured value is greater than the expected value.

7. If the SP error is inside the range of -0.8 dB to +0.8 dB, proceed to the next step. If the SHARED PL ERROR (SP error) is outside the range of -0.8 dB to +0.8 dB, the IF Amplifier/Limiter UD4A9R1 Gain adjustment shall be performed as a minimum. Follow the instructions in the NOTE following this step. If time permits, it is highly recommended that the entire Receiver Channel alignment of paragraph 6-6.24 be performed, then repeat calibration procedures beginning with paragraph 6-6.28.1.4.2.

**NOTE**

The SHORT PULSE, LIN CHAN NOISE shall be 0.200E-05 ± 0.040E-05. Record as original value in Table 6-31. If not, make a quarter turn adjustment clockwise of IF Amplifier/Limiter Gain UD4A9R1 if the noise is too low, otherwise counterclockwise. The LIN CHAN NOISE should change as a result, but it will take up to 1 minute to do so. It requires another DC Offset and Noise Calibration plus reentering **DIPD<Tab>REC<Return>** to register the effect of the change. When in Standby, the calibration is performed once per minute, but the noise is “scaled” so that not all of the adjustment effect will be reflected in each update following the calibration sequence. Therefore, it is desirable to

wait approximately five minutes after each adjustment before proceeding. If significant adjustment is required or problems are suspected with the shared path, the entire section 6-6.24 Receiver Channel Alignment should be completed at this time. At a minimum, if adjustment is made to 4A9R1, the AGC threshold should be reverified (paragraph 6-6.24.4 ) and the R94/R96 path losses should be checked (paragraph 6-6.31 ) following completion of all Part 2 Calibration Checks.

8. Calculate the Reflectivity Error Estimate as follows:

   Ze error estimate = CAL# aver (Table 6-27) - Pt error - SP error

   = _____ - _____ - _____

   = _____ dB

9. If the Reflectivity Error Estimate is inside the range of -1 dB to +1 dB, this procedure is complete. If the Reflectivity Error Estimate is outside the range of -1 dB to +1 dB, the Reflectivity Error Check procedure of paragraph 6-6.28.2.1 shall be performed *as soon as it is practical*.

10. Example:

    CAL # = +2.4 aver from Table 6-27
    Ant Peak Power = 177 kW aver from Table 6-27
    M/WAVE LOSS$_{(expected)}$ = 3.6 dB from paragraph 6-6.28.1.3.2 or paragraph 6-6.28.1.3.3
    SHORT PULSE,LIN CHAN NOISE = 0.235E-05 aver from Table 6-27

    Ratio = Antilog (3.6 dB/10)
    = Antilog (0.36)
    = 2.29

    The antilog may be easily calculated on a scientific calculator with a "$x^y$" or the "inverse log" function. In this case, enter 10, press the "$x^y$" key, then enter 0.36, equals (=). The answer 2.29 should be displayed. For the inverse log function, enter .36, inverse log (normally a shifted or second function log key), then equals (=). The answer 2.29 should be displayed.

    Ant Peak Power$_{(expected)}$ = XMTR Peak Power$_{(expected)}$/Ratio
    = 700 kW/2.29
    = 305.67 kW

    Pt error = 10 log (Ant Peak Power$_{(expected)}$/Ant Peak Power$_{(average)}$)
    = 10 log (305.67 kW/177 kW)
    = 10 (.237)
    = + 2.37 dB

    SP error = 10 log (0.200E-05/SHORT PULSE, LIN CHAN NOISE $_{(average)}$)
    = 10 log (0.200E-05/0.239E-05)
    = 10 (-0.07)
    = - 0.70 dB

Ze error (est) = CAL # - Pt error - SP error
= + 2.4 - (+2.37) - (-0.70)
= + 0.73 dBZ

6-6.28.1.4.4 Off-line Reflectivity Error Estimate Calculation Procedure. This procedure requires the system to be taken off-line to run RDASOT. If operational considerations permit, this is the preferred procedure.

1. At the RDA Applications Terminal, terminate the operational software by entering **TERP<Tab>*password*<Return>**.

2. Press the **<Shift>** and **<Port>** keys **simultaneously** to switch to the RDA System Console. When the tasks cancel, bring up the RDASOT program by performing the following steps; enter:

| Step | Operator Action | System Response/Comments |
|---|---|---|
| a. | **RDASOT<Return>** | RDASOT Main Menu (Mode Selection Menu for Redundant sites) is displayed. |
| b. | **1<Return>**<br>Redundant sites only | To select FULL mode for this procedure at Redundant sites. |
| c. | **1<Return>**<br>Only to record session, otherwise go to step e. | To create a Log of the session, if desired; Record Maintenance Session Menu appears. |
| d. | **1<Return>** | To select Log to Disk, if desired. |
| e. | **3<Return>** | To select Calibration Menu. |
| f. | **4<Return>** | To select RCVR/SP Calibration Routines; RSP Calibration Selection Menu is displayed. |
| g. | **1<Return>** | To select Reflect Error Estimate - SP. |

3. At the prompts, enter the data recorded during the four VCP scans. Be careful to enter minus signs for negative values. Enter **<Return>** after each data entry item.

| PARAMETER | ENTER AS: |
|---|---|
| CAL # | Table 6-27 value |
| SP LIN NOISE | XXXE-XX (noted number with exponent) |
| NOISE TEMP | XXX (degrees K) |
| ANT PK PWR | XXX (kW) |
| XMTR PK PWR | XXX (kW) |
| M/WAVE LOSS | X.X (dB) |
| CW LIN EXP | XX.X (dBZ) |

| | |
|---|---|
| CW LIN MEAS | XX.X (dBZ) |
| RFD1 LIN EXP | XX.X (dBZ) |
| RFD1 LIN MEAS | XX.X (dBZ) |
| RFD2 LIN EXP | XX.X (dBZ) |
| RFD2 LIN MEAS | XX.X (dBZ) |
| RFD3 LIN EXP | XX.X (dBZ) |
| RFD3 LIN MEAS | XX.X (dBZ) |
| SP LIN SYSCAL | XX.X (dB) |

4. After a complete data set is entered, you can correct data entries if desired. Enter ***line* #<Return>** and ***new value*<Return>**if necessary or enter **Ø<Return>** if all values are correct. Proceed in this manner until data for all four VCP scans are entered.

5. The RDASOT routine will display the Short Pulse Reflectivity Error Estimate Summary. It will provide the average data for the four VCP scans, the R234 and R236 adaptation values, and then the computed XMTR PWR Error (Pt error), Shared PL Error (SP error), and Reflectivity Error Estimate (Ze error). Record the average VCP scan data onto Table 6-27.

6. If the Pt error is inside the range of -0.3 dB (-50 kW) to +0.3 dB (+50 kW), proceed to the next step. If the XMTR PWR Error (Pt error) is outside the range of -0.3 dB (-50 kW) to +0.3 dB (+50 kW), verify power monitor consistency using paragraph 6-6.28.1.3 . If adjustments are required by paragraph 6-6.28.1.3 , perform the adjustments and repeat this procedure.

7. If the SP error is inside the range of -0.8 dB to +0.8 dB, proceed to the next step. If the Shared PL Error (SP error) is outside the range of -0.8 dB to +0.8 dB, the IF Amplifier/Limiter UD4A9R1 Gain adjustment shall be performed as a minimum. Follow the instructions in the NOTE below. If time permits, it is highly recommended that the entire Receiver Channel alignment of paragraph 6-6.24 be performed, then repeat calibration procedures beginning with paragraph 6-6.28.1.4.2 .

**NOTE**

The SHORT PULSE, LIN CHAN NOISE shall be 0.200E-05 ±0.040E-05. Record as original value in Table 6-31. If not, make a quarter turn adjustment clockwise of IF Amplifier/Limiter Gain UD4A9R1 if the noise is too low, otherwise counterclockwise. The LIN CHAN NOISE should change as a result, but it will take up to 1 minute to do so. It requires another DC Offset and Noise Calibration plus reentering **DIPD<Tab>REC<Return>** to register the effect of the change. When in Standby, the calibration is performed once per minute, but the noise is “scaled” so that not all of the adjustment effect will be reflected in each update following the calibration sequence. Therefore, it is desirable to wait approximately five minutes after each adjustment before

proceeding. If significant adjustment is required or problems are suspected with the shared path, the entire section 6-6.24 Receiver Channel Alignment should be completed at this time. At a minimum, if adjustment is made to 4A9R1, the AGC threshold should be reverified (paragraph 6-6.24.4 ) and the R94/R96 path losses should be checked (paragraph 6-6.31 ) following completion of all Part 2 Calibration Checks.

8. If the Reflectivity Error Estimate is inside the range of -1 dB to + 1 dB, proceed to the next step. If the Reflectivity Error Estimate (Ze error) is outside the range of -1 dB to +1 dB, the Reflectivity Error Check procedure of paragraph 6-6.28.2.1 shall be performed *as soon as it is practical*.

9. Enter **Ø<Return>** until RDASOT terminates.

10. If the session was recorded to disk, the filename must be changed by entering the following at the RDA system console:
**RENAME PØ6RECOD.LOG,*filename*.LOG<Return>**, where *filename* is a name of your choosing. Otherwise skip to next step.

11. At the RDA System Console, enter **RDAUP<Return>**.

12. Press the **<Shift>** and **<Port>** keys **simultaneously** to access the Applications Terminal.

13. At the Applications Terminal command line, enter **OPER<Return>**.

6-6.28.1.5 Suncheck Measurements. The Suncheck measurement capability is used to perform the following calibrations:

- Pedestal Angle Alignment Check (Subtest 1).
- Suncheck Critical Path Error Check using the sun as a test signal source (Subtest 2).

**NOTE**

It is necessary to perform Subtest 1 before Subtest 2. Subtest 2 can be run by itself by deselecting Subtest 1, but Subtest 1 should be run at least once prior to its deselection to ensure antenna pointing accuracy.

Adjustments to adaptation data in the Noise Critical Path necessitate re-running the Suncheck measurements as the Noise Critical Path impacts Subtest 2. The elements in the Noise Critical Path are Receiver Adaptation Data parameters R35, R60, R63, R66, R69, and R72. If a complete calibration is anticipated, it is best to perform the Suncheck measurements after all other calibrations are completed.

6-6.28.1.5.1 Equipment and Tools Required.

1. Calculator, scientific
2. SCSI scratch tape if permanent record of test performance is required.

**NOTE**

The Maintenance Session is automatically logged to disk in a file called "P06RECOD.LOG". This file is wiped clean upon exiting and reentering RDASOT. It is a good idea to rename this file upon exiting RDASOT if there is a chance that the information will be needed later.

6-6.28.1.5.2 Initial Conditions/Preliminary Setup.

1. Obtain the latest Solar Flux data from the Internet at www.sec.noaa.gov. See paragraph 6-6.28.1.5.3 , step 15 for the exact procedures to navigate through the Space Environment Center Home Page.

6-6.28.1.5.3 Suncheck Measurement Procedure.

1. Enable local RDA control from the MSCF as follows:

   a. In the RPG Control/Status window (HCI Main Window) (Active/Controlling channel only for FAA Redundant systems), click on the Control block in the RDA container to open the RDA Control/Status window and observe the RDA Control: field. The RDA Control: field should indicate RPG assuming the RPG is in control.

   b. In the RDA Control area of the RDA Control/Status window, click on **Enable Local (RDA)** to allow control at the RDA.

   c. Click on the **Close** button in the upper left hand corner of the RDA Control/Status window to close the window.

2. Proceed to the RDA with the SCSI tape, if a hard copy of the test results is desired.

3. At the Applications Terminal, enter **RELC<Return>** to request local control.

4. At the Applications Terminal, enter **STBY<Return>** to place RDA in standby.

5. At the Applications Terminal, terminate the operational software by entering: **TERP<Tab>*password*<Return>**.

6. Press the **<Shift>** and **<Port>** keys **simultaneously** to access the RDA System Console.

7. At the RDA System Console, enter **D TA<Return>** to ensure that the applications tasks are canceled. Time should be the only task listed.

8. Set the date and time per paragraph 4-3.3 to ensure the product stamp is accurate. Another source for the correct UTC time is by calling (303) 499-7111. This procedure permits use of the system time while performing Suncheck subtests.

9. Load the scratch tape in the SCSI tape drive if you wish to record the maintenance session. Otherwise, skip to the next step.

10. At the RDA System Console, bring up the RDASOT program by entering the following:

| Step | Operator Action | System Response/Comments |
|---|---|---|
| a. | **RDASOT<Return>** | RDASOT Main Menu (Mode Selection Menu for Redundant sites) is displayed. |
| b. | **1<Return>**<br>Redundant sites only | To select FULL mode for this procedure at Redundant sites. |
| c. | **1<Return>**<br>Only to record session, otherwise go to step e. | To select Record Maintenance Session, if desired; Record Maintenance Session Menu appears. |
| d. | **2<Return>** | To select Log to tape, if desired. Logs entire maintenance session to tape. |
| e. | **3<Return>** | To select Calibration Menu. |
| f. | **2<Return>** | To select Suncheck Measurements; Suncheck Test Control Menu is displayed. |
| g. | **1<Return>** | To select Begin Subtest Execution. |

11. During the performance of Subtest 1, you will be prompted to enter the correct Coordinated Universal Time to the nearest second. Enter **Ø<Return>** to use the system time which has been corrected in step 8.

12. Within 2 minutes, the antenna will automatically be positioned to the calculated sun position, and a 3-degree scan in both azimuth and elevation will be performed while collecting sun noise power data. From the data, a new azimuth correction factor, as well as the old azimuth correction factor, will be displayed. If the new correction factor is less than 0.3333 degrees, respond **<Y>** when prompted to enter the new azimuth correction factor to update the calibration data. Enter corrections in Table 6-30.

**NOTE**

Build 10 introduces tighter tolerances and new WARNING messages for this RDASOT procedure. If the new AZ/EL correction values are greater than 0.3333 degrees for Suncheck Measurement Subtest 1, the first example warning below will be displayed. A second WARNING message (see second example)

will be displayed if the calibration data is updated and the correction value is greater than 0.5 degrees. If the corrections are saved with errors of this magnitude, the radar may become inoperable.

EXAMPLE 1:

**WARNING: SUNCHECK TEST HAS DETERMINED A PEDESTAL ANGULAR CORRECTION OF GREATER THAN 0.3333 DEGREES.

(1) CHECK ACCURACY OF INPUT TIME
(2) CHECK ENCODER ALIGNMENT
(3) CHECK TIGHTNESS OF PEDESTAL MOUNTING BOLTS UPDATE CALIB. DATA WITH ELEV. CORRECTION? (Y or N)

EXAMPLE 2:

**WARNING**WARNING**WARNING**WARNING**

THE ANGULAR CORRECTION VALUE IS GREATER THAN .5 DEGREES. CONSULT THE TECHNICAL MANUAL FOR THE PROPER CORRECTIVE ACTION THAT MUST BE TAKEN NOW. BEFORE ACCEPTING AN ANGULAR CORRECTION VALUE GREATER THAN .5 DEGREES, BE SURE YOU HAVE A BACKUP OF THE FILE LONGTERM.DAT. DO YOU STILL WANT TO UPDATE THE CORRECTION VALUES? (Y or N)

**NOTE**

If the error is greater than 0.3333 degrees, use Figure 6-83 (sheet 2 of 5) and the instructions on the screen to troubleshoot and determine the cause. If Subtest 1 does not run properly, the error may be larger than 3 degrees, particularly if a floating point error is obtained. In this event, perform the Azimuth and/or Elevation encoder alignment of paragraph 6-6.17 ; then repeat this paragraph.

13. Next, the old and new elevation correction factors will be displayed. Respond **<Y>** if the new correction factor is less than 0.3333 degrees from the old. Enter corrections in Table 6-30. If the error is larger than 0.3333 degrees, troubleshoot to determine cause.

14. If no troubleshooting is required, this completes the Pedestal Angle Alignment Check procedure (Subtest 1). Subtest 2, the Suncheck Critical Path error check (gain/loss) checks begins. Reenter time as indicated in step 11.

15. Obtain the latest Solar Flux data by using the Internet or calling the Space Environment Center by either of the following methods:

a. If Internet access is available, enter Internet address www.sec.noaa.gov to access the Space Environment Center Home Page. Enter the following sequence to obtain the latest flux for Penticton Solar Lab which has a wavelength of 10.7 cm and a frequency of 2800 MHz:
www.sec.noaa.gov ⇒ Space Weather Now ⇒ User Groups - Radio (scroll to bottom of Web page) ⇒ Report of Solar & Geophysical Activity ⇒ select the latest date of Report of Solar-Geophysical Activity ⇒ go to paragraph IV, Penticton 10.7 cm Flux ⇒ Observed (latest date) or Predicted for next three days ⇒ obtain flux data.

b. If the Internet is not available, call the Space Environment Center at (303) 497-3171. Be prepared to copy some data. Request the latest Solar Flux Data for Penticton at 2800 MHz.

c. Record both the observed and predicted Solar Flux data for Penticton 10.7 cm Flux for the latest dates.

Observed _____ SFU Date _____ Site Frequency _____

Predicted _____ SFU Dates_____

d. Determine any correction to the observed or predicted Solar Flux data, if any, by using Table 6-28 and the following steps.

(1) Using the SFUs from step c, locate the closest SFU value under the Solar Flux column.

(2) Using your site frequency, locate the column that is closest to your site frequency.

(3) Locate the correction value where the row of the closet SFU value intersects the column with the closest frequency. Record the value below.

Correction Value _____

e. Apply the correction value to the SFUs to be used from step c above.

Corrected SFU Value = Observed/Predicted SFU + Correction Value

= _____ + _____

= _____

Table 6-28. Solar Flux Correction for Site Frequency

| Solar Flux | 2700 MHz | 2800 MHz | 2900 MHz | 3000 MHz |
|---|---|---|---|---|
| 100 SFU | -1 | 0 | +1 | +2 |
| 150 SFU | -2 | 0 | +2 | +4 |
| 200 SFU | -3 | 0 | +3 | +6 |
| 250 SFU | -4 | 0 | +4 | +8 |

Example:

From the Internet we read as follows:

IV. Penticton 10.7 cm Flux
Observed 16 Oct 161
Predicted 17 Oct -19 Oct 160/165/175

Today's date is 17 Oct, so the value of 160 SFUs will be used. Site frequency is 2865 MHz. From Table 6-28, the Solar Flux correction value to the nearest SFU is +2. The corrected SFU value is then 160 + 2 = 162.

16. Perform Subtest 2, the Antenna Gain/Loss check. The program will prompt you for data as follows:

    a. Whether one or two solar pairs is used: enter **1<Return>**.

    b. For frequency: enter **2800<Return>**.

    c. For Solar Data: enter:
    ***corrected Solar Flux data from step 15.e.*****<Return>**.

17. Record the Gain Adjustment and A1 Estimate in Table 6-29. Repeat the Subtest 2 procedure for a total of five different sets of readings using the same frequency and SFU as used the first time. Subtest 1 may be deselected during the collection of the four additional data sets.

Table 6-29. Suncheck Subtest 2 Results

| Reading | Gain Adjustment (dB) | A1 Estimate (dB) |
|---|---|---|
| 1st | | |
| 2nd | | |
| 3rd | | |
| 4th | | |
| 5th | | |
| Average | | |

18. Calculate the mean (average) Gain Adjustment and A1 Estimate using a suitable calculator and enter in Table 6-29.

19. The average Gain Adjustment shall be 0±0.3 dB. If this is not the case and the Gain Adjustment is a positive number (i.e., the measured Sun Noise Temperature is higher than the expected value), the Subtest 2 data may be corrupted by sunspot or solar flare activity. Before taking remedial action, repeat the above procedure a few times over the next few days. The anomalous sun activity is of relatively short duration and should not be experienced over a few days time interval. Further, it will always be in a direction which increases the measured Sun Noise Temperature over the expected value.

20. If the average Gain Adjustment is not 0±0.3 dB, and the possibility of anomalous solar activity has been eliminated, refer to paragraph 6-6.28.3.6 , Solar Calibration, for corrective action.

21. If the average Gain Adjustment is 0±0.3 dB, proceed to the next step.

22. At the completion of Subtest 2, record the Gain Adjustment in Table 6-30 for trend analysis.

23. At the RDA System Console, enter **Ø<Return>** to exit RDASOT program.

24. Remove the SCSI tape from the tape drive, if necessary.

25. At the RDA System Console, enter **RDAUP<Return>** to load operational program.

26. Press the **<Shift>** and **<Port>** keys **simultaneously** to access the Applications Terminal.

27. At the Applications Terminal command line, enter **OPER<Return>**.

28. With the system in the operate mode, allow enough time for the transmitter power and delta SYSCAL to stabilize. The delta SYSCAL shall be less than 0±0.3 dB. If not, at the applications terminal, enter **DIPD<Tab>CAL<Return>** on the command and parameter lines. Then enter **PAGF<Return>** and note the value of SHORT PULSE, LIN CHAN SYSCAL.

    SHORT PULSE, LIN CHAN SYSCAL _____ dB

29. Enter the value of SHORT PULSE, LIN CHAN SYSCAL as the new value for R234 in Adaptation Data per the procedures in paragraph 6-6.29 . Be sure to save the changes to disk, then terminate the operational software.

30. At the RDA System Console, enter **RDAUP<Return>**. The settled value of the CAL# should be 0±0.3 dB in the operate mode. This completes the Suncheck Subtest 2 procedure.

6-6.28.1.6 Data Recording. Following completion of checks, record a series of final calibration numbers as indicated on Table 6-30. This allows recording of multiple data sets and can be used for trend analysis.

Table 6-30. Final Data Record

| | | | | | | |
|---|---|---|---|---|---|---|
| DATE | _____ | _____ | _____ | _____ | _____ | _____ |
| **CHANNEL** _____ | | | | | | |
| Paragraph 6-6.28.1.1 | * RDA PERF DATA, then click on Calibration | | | RDA COMMAND: DIPD-CAL | | |
| CALIB # | _____ | _____ | _____ | _____ | _____ | _____ |
| CW LIN TGT EXPECTED | _____ | _____ | _____ | _____ | _____ | _____ |
| CW LIN TGT MEASURED | _____ | _____ | _____ | _____ | _____ | _____ |
| Δ (MEASURED-EXPECTED) | _____ | _____ | _____ | _____ | _____ | _____ |
| RFD1 LIN TGT EXPECTED | _____ | _____ | _____ | _____ | _____ | _____ |
| RFD1 LIN TGT MEASURED | _____ | _____ | _____ | _____ | _____ | _____ |
| Δ (MEASURED-EXPECTED) | _____ | _____ | _____ | _____ | _____ | _____ |
| RFD2 LIN TGT EXPECTED | _____ | _____ | _____ | _____ | _____ | _____ |
| RFD2 LIN TGT MEASURED | _____ | _____ | _____ | _____ | _____ | _____ |
| Δ (MEASURED-EXPECTED) | _____ | _____ | _____ | _____ | _____ | _____ |
| RFD3 LIN TGT EXPECTED | _____ | _____ | _____ | _____ | _____ | _____ |
| RFD3 LIN TGT MEASURED | _____ | _____ | _____ | _____ | _____ | _____ |
| Δ (MEASURED-EXPECTED) | _____ | _____ | _____ | _____ | _____ | _____ |
| (RFD1 Δ + RFD2 Δ + RFD3 Δ)÷3 | _____ | _____ | _____ | _____ | _____ | _____ |
| Paragraph 6-6.28.1.2 | * RDA PERF DATA, then click on Calibration Check | | | RDA COMMAND: DIPD-CHK | | |
| KD1 LIN TGT EXPECTED | _____ | _____ | _____ | _____ | _____ | _____ |
| KD1 LIN TGT MEASURED | _____ | _____ | _____ | _____ | _____ | _____ |
| Δ (MEASURED-EXPECTED) | _____ | _____ | _____ | _____ | _____ | _____ |
| KD2 LIN TGT EXPECTED | _____ | _____ | _____ | _____ | _____ | _____ |
| KD2 LIN TGT MEASURED | _____ | _____ | _____ | _____ | _____ | _____ |
| Δ (MEASURED-EXPECTED) | _____ | _____ | _____ | _____ | _____ | _____ |
| KD3 LIN TGT EXPECTED | _____ | _____ | _____ | _____ | _____ | _____ |
| KD3 LIN TGT MEASURED | _____ | _____ | _____ | _____ | _____ | _____ |
| Δ (MEASURED-EXPECTED) | _____ | _____ | _____ | _____ | _____ | _____ |
| (KD1 Δ +KD2 Δ + KD3 Δ ) ÷ 3 | _____ | _____ | _____ | _____ | _____ | _____ |
| Paragraph 6-6.28.1.3 | * RDA PERF DATA, then click on Transmitter | | | RDA COMMAND: DIPD-XMT | | |
| XMTR PK PWR | _____ | _____ | _____ | _____ | _____ | _____ |
| ANT PK PWR | _____ | _____ | _____ | _____ | _____ | _____ |
| M/WAVE LOSS | _____ | _____ | _____ | _____ | _____ | _____ |

* At the MSCF HCI, click on the RDA PERF DATA icon, then in the RDA Performance Data window, click on function to check.

Table 6-30. Final Data Record (continued)

| Paragraph 6-6.28.1.4 and 6-6.24 | * RDA PERF DATA, then click on Receiver/Sig Processor | | | RDA COMMAND: DIPD-REC | | |
|---|---|---|---|---|---|---|
| SHORT PULSE, LIN CHAN NOISE | _____ | _____ | _____ | _____ | _____ | _____ |
| SYSTEM NOISE TEMP OK | _____ | _____ | _____ | _____ | _____ | _____ |

| Paragraph 6-6.28.1.5 | *SUNCHECK NUMBERS* |
|---|---|
| FINAL AZIMUTH CORRECTION | _____ |
| FINAL ELEVATION CORRECTION | _____ |
| GAIN ADJUSTMENT | _____ |

* At the MSCF HCI, click on the RDA PERF DATA icon, then in the RDA Performance Data window, click on function to check.

6-6.28.2 Part 2 - Off-line Calibration Checks. These procedures must be completed in their entirety and in the order listed.

**NOTE**

Off-line procedures require cessation of normal activities, including narrow band (NB) communications. NB communications should be disconnected prior to any off-line procedures.

**NOTE**

In the following procedure, it is critical to observe and record the positive or negative sign of the result. If signs are reversed, errors will result.

6-6.28.2.1 Reflectivity Error Check. The CAL# which is displayed in the RDA Summary status field of the Main Menu is an indication that the most recently calculated SYSCAL is different from the value of SYSCAL in adaptation data (R234). This may be expressed as:

CAL# (SP) = SYSCAL (SP recent) - R234

Changes in the transmitted power as well as changes in both the shared path and the test signal critical path will cause a change in SYSCAL. This may be expressed as follows:

CAL# = delta SYSCAL = Pt error + SP error + Ze error

where Pt error is the change in the transmitted power as indicated by the Antenna or Transmitter Power Monitor.

SP error is the change in the shared path.
Ze error is the reflectivity error.

An estimate of the reflectivity error can be made if the change in transmitted power and the change in shared path loss can be evaluated. That estimate is made in paragraph 6-6.28.1.4 . During the

performance of paragraph 6-6.28.1.4 , if the resultant Ze error exceeded ±1 dB, you were instructed to accomplish the following Reflectivity Error Check procedure at that time.

The reflectivity error can be evaluated exactly by performing path loss measurements of the CW Test Path, the RF Drive Test Path, and by computing the Power Monitor Consistency error.

6-6.28.2.1.1 Reflectivity Error Evaluation and Correction. This procedure checks the path losses associated with the CW Test Path from the reference signal generator through the receiver protector. Then, the reflectivity error will be evaluated and corrected. This procedure is a prerequisite to performing the Reflectivity Accuracy Verification procedure. **Paragraph 6-6.28.2.1.4 shall be used to precisely evaluate the reflectivity error. Paragraph 6-6.28.2.1.5 can be used as an alternative procedure during inclement weather, provided the precise procedure has been accomplished at least once.**

6-6.28.2.1.2 Equipment and Tools Required.

1. Power Meter HP436A
2. Power Sensor HP8481A (-30 to +20 dBm)
3. Test Cable, Type-N, 4 feet or longer
4. Adapter, Type-N, female-to-female (Qty 2)
5. Pliers
6. Screwdriver, Phillips-tip
7. Adapter, Type-N, 90° (if available)
8. Mode Adapter, Waveguide to Type-N (female), HP S281A or equivalent
9. Hex Key Set
10. Scientific calculator

6-6.28.2.1.3 Initial Conditions/Preliminary Setup.

**WARNING**

Failure to perform applicable shutdown steps in paragraph 6-6.15.3 could cause serious injury or death from antenna radiation or antenna movement.

1. Perform steps 1, 2, 3, 5, and 6 of paragraph 6-6.15.3 to shut down antenna/pedestal.

**WARNING**

Failure to place the pedestal PWR ON/SAFE Safety Interlock Switch to the SAFE position could cause serious injury or death.

2. At the azimuth housing, ensure the PWR ON/SAFE Safety Interlock Switch is set to the SAFE position.

**WARNING**

Failure to move azimuth and elevation stow pins from OPERATE to STOW could cause serious injury or death.

3. Ensure that the azimuth and elevation stow pins are in STOW.

6-6.28.2.1.4 Preferred Procedure. The reflectivity error may be precisely expressed as follows:

Ze error = CW Test Path error + RF Drive Test Path error + Power Monitor error

To evaluate this expression and to correct the errors found, perform the following steps.

1. If not done, terminate the applications software by entering **TERP<Tab>*password*<Return>** on the command and parameter lines. Press the **<Shift>** and **<Port>** keys **simultaneously** to display the System Console.
2. At the RDA System Console, bring up the RDASOT program by entering the following:

| Step | Operator Action | System Response/Comments |
|---|---|---|
| a. | **RDASOT<Return>** | RDASOT Main Menu (Mode Selection Menu for Redundant sites) is displayed. |
| b. | **1<Return>**<br>Redundant sites only | To select FULL mode for this procedure at Redundant sites. |
| c. | **4<Return>** | To select Manual Control and Display Menu. |
| d. | **2<Return>** | To select Control RCVR/Signal Proc; the TESTSIG Source Selection Menu will be displayed. |
| e. | **5<Return>** | To select CW Source; CW Source Control Menu is displayed. |
| f. | **2<Return>**<br>if RCVR Injection Point is **not** Front End | To toggle RCVR Injection Point to **Front End**; CW Source Control Menu is again displayed. |
| g. | **6<Return>**<br>if Receiver Protector is **not** Normal | To toggle Receiver Protector to **Normal**; CW Source Control Menu is again displayed. |
| h. | **4<Return>** | To select Test Attenuation. `Enter the new RF Test Attenuation Value (0...103 dB)` is displayed. |

| Step | Operator Action | System Response/Comments |
|---|---|---|
| i. | **8<Return>** | To select 8 dB attenuation; CW Source Control Menu is again displayed. |
| j. | **1<Return>** | To select Inject Signal. |

**WARNING**

Failure to set the Pedestal Motor Power circuit breakers in the Secondary Power Distribution Panel to OFF when working on pedestal equipment could cause serious injury or death.

3. Ensure the Pedestal Motor Power circuit breakers CB2, 4, 6 at the RDA Secondary Power Distribution Panel are set to **OFF**.

4. Ensure the Pedestal Electronics Power switch on the RDA Maintenance Panel UD5A2 is set to **OFF**.

5. Proceed to radome with all of the equipment named in paragraph 6-6.28.2.1.2 .

6. Calibrate the power meter and HP8481A Power Sensor in accordance with paragraph 6-6.22 .

**NOTE**

You will be entering a confined space, non-permit required. This means the confined space does not contain any atmospheric hazards capable of causing death or serious physical harm.

7. Open the lower antenna pedestal door or remove access cover plate.

**NOTE**

The following procedure is written referencing single channel and Redundant site Channel 2 systems. Redundant site Channel 1 systems should remember to substitute Receiver Protector 2A7 for 2A3, LNA 2A8 for 2A4, cable 2W14 for 2W5, cable 2W15 for 2W6, Bandpass Filter 2A1A3FL2 for 2A1A3FL1, and coax cable 2W901 for 2W900.

8. Locate the Receiver Protector UD2A3, Bandpass Filter UD2A1A3FL1/2, and the Low Noise Amplifier Assembly UD2A4.

   a. Remove the Low Noise Amplifier and Type N male-to-male adapter connected to 2A4J1 and set aside.

   b. Connect the HP8481A Power Sensor to the Bandpass Filter 2A1A3FL1/2 Out. If necessary, use a Type-N 90° adapter connected to filter OUT jack.

9. Measure and record the average power.

   $P_{@2A1A3FL1/2\ Out(measured)}$ = _____ dBm

10. Calculate the expected power at this point from the adaptation data recorded in Table 6-26 as follows:

    $P_{@2A1A3FL1/2\ Out(expected)}$ =
    R34 + R59 + R63 + R66 + R69 + R72 + R73 + R122 + R247 + R248

    R34 _____
    R59 _____
    R63 _____
    R66 _____
    R69 _____
    R72 _____
    R73 _____
    R122 _____
    R247 _____
    R248 _____

    $P_{@2A1A3FL1/2\ Out(expected)}$ =_____ dB

11. Calculate the difference between the measured and expected values.

    $P_{@2A1A3FL1/2\ Out(difference)}$ = $P_{@2A1A3FL1/2\ Out(measured)}$ - $P_{@2A1A3FL1/2\ Out(expected)}$

    = _____ - _____

    = _____ dB

12. Disconnect the power sensor from the output of Bandpass Filter 2A1A3FL1/2.

13. The quantity $P_{@2A1A3FL1/2\ Out\ (difference)}$ is the CW Test Path Error.

    CW Test Path error = _____ dB. Enter as original value in Table 6-31.

14. Remove cable 2W5 connected to the input of the Receiver Protector 2A3J3.

15. Connect the power sensor to the end of the removed cable using the Type-N female-to-female adapter.

16. Measure the power at this point (2W5).

    $P_{@2W5(measured)}$ = _____ dBm

17. Calculate the R72 + (R73+R247+R248) path loss as follows:

$[R72 + (R73+R247+R248)]_{(measured)}$ = $P_{@2A1A3FL1/2\ Out(measured)}$ (step 9) - $P_{@2W5}$ (Step 16)

= _____ - _____

= _____ dBm

$R72_{New}$ = $[R72 + (R73+R247+R248)]_{(measured)}$ - R73

= _____ - _____

= _____

**NOTES**

If $R72_{New}$ is outside the range of -19.7 to -20.3, it will be necessary to measure $R73_{New}$ and recalculate $R72_{New}$ using the procedure in steps 18 through 25. Proceed to step 18.

If $R72_{New}$ is within the prescribed range, but differs from adaptation data by more than ±0.2 dB, it will be necessary to complete the entire paragraph 6-6.28.3.1 . While in the radome, reconnect the LNA and disconnected cables and complete the measurement of the output of the Low Noise Amplifier as specified in paragraph 6-6.28.3.1.2 , steps 15 through 18. This can be used later in the calculations and avoid a second trip to the radome.

If $R72_{New}$ is in the range of -19.7 to -20.3 and is within 0.2 dB of the initial value of R72 in Table 6-26, proceed to step 26.

18. Notify the technician in the equipment shelter to insert 20 dB in the Test Attenuator. At the RDA System Console, enter:

| Step | Operator Action | System Response/Comments |
|---|---|---|
| a. | **Ø<Return>** | To return to CW Source Control Menu. |
| b. | **4<Return>** | To select Test Attenuation. `Enter the new RF Test Attenuation Value (0...103 dB)` is displayed. |
| c. | **2Ø<Return>** | To select 20 dB attenuation; CW Source Control Menu is again displayed. |
| d. | **1<Return>** | To select Inject Signal. |

19. In the radome, disconnect 2W5P1 from 2A3J3. Disconnect the waveguide from 2A3J1 and connect the Mode Adapter to 2A3J1. Place the dust cover which comes with the Mode Adapter over the exposed open waveguide to prevent accidentally dropping anything down the waveguide.
20. Connect the Type-N female-to-female adapter to 2W5P1, the cable which was previously connected to 2A3J3. Connect the short piece of Type-N test cable to the adapter.
21. Calibrate the power meter and the HP8481A power sensor using paragraph 6-6.22. Connect the power sensor to the end of the short piece of cable using the second Type-N female-to-female adapter and measure the power as follows:

    $P_{in@2A3J1}$ = _____ dBm
22. Disconnect the power sensor and female-to-female adapter from the short cable and connect the cable to the Mode Adapter which is connected to 2A3J1.
23. Connect the power meter, power sensor, and Type-N female-to-female adapter to the output of the Bandpass Filter 2A1A3FL1/2 Out (connected to output of the Receiver Protector 2A3J2). Measure and record the power as follows:

    $P_{out@2A1A3FL1/2\ Out}$ = _____ dBm
24. Calculate the new value for R73 as follows:

    $R73_{New}$ = $P_{out\ @2A1A3FL1/2\ Out}$ - $P_{in\ @2A3J1}$

    = _____ - _____

    = _____ dB

    Record as $R73_{Final}$ in Table 6-26.
25. The $R72_{New}$ value calculated in step 17 must now be corrected. Calculate the revised value for $R72_{New}$ as follows:

    $R72_{New}$ = [R72 + R73] measured in step 17 - $R73_{New}$ calculated in step 24.

    = _____ - _____

    = _____ dB

    Record as $R72_{Final}$ in Table 6-26. Communicate with the technician in the equipment shelter to return the Test Attenuator back to 8 dB. At the RDA System Console, enter:

| Step | Operator Action | System Response/Comments |
|---|---|---|
| a. | **Ø<Return>** | To return to CW Source Control Menu. |
| b. | **4<Return>** | To select Test Attenuation. `Enter the new RF Test Attenuation Value (0...103 dB)` is displayed. |

| Step | Operator Action | System Response/Comments |
|---|---|---|
| c. | **8<Return>** | To select 8 dB attenuation; CW Source Control Menu is again displayed. |
| d. | **1<Return>** | To select Inject Signal. |

**NOTE**

If $R72_{Final}$ differs from current adaptation data by more than ±0.2 dB, it will be necessary to complete the entire paragraph 6-6.28.3.1 . While in the radome, reconnect the LNA and 2A3 inputs and complete the measurement at the output of the Low Noise Amplifier as specified in paragraph 6-6.28.3.1.2 steps 15 through 18. This data can be used later in the calculations and avoid a second trip to the radome.

26. Replace all removed components and cables restoring everything in the radome to normal.

27. Return to the equipment shelter.

    a. At the RDA Secondary PDP (#2 UD7A29 for FAA Redundant or #3 UD7A30 for NWS Redundant), set Pedestal Motor Power circuit breakers CB2, 4, and 6 to **ON**.

    b. At the RDA Maintenance Panel UD5A2, place the Pedestal Electronics Power switch to **ON**.

28. Disconnect cable 4W104 from 4J16 at the inside top of Receiver Cabinet UD4.

29. Calibrate the power meter and HP8481A Power Sensor in accordance with paragraph 6-6.22 . Connect the HP8481A Power Sensor to 4W104 through a Type-N female-to-female adapter and Type-N 90° adapter (if available). Measure the power at the end of cable 4W104. Support the combination to avoid undue stress on the cable.

    $P_{@4W104}$ = _____ dBm

30. Terminate RDASOT. At the RDA System Console, enter **Ø<Return>** until RDASOT is terminated.

31. At the RDA System Console, enter **RDAUP<Return>** to bring up the operational software.

32. Press the **<Shift>** and **<Port>** keys **simultaneously** to access the Applications Terminal.

33. Calculate the R69 path loss as follows:

$R69_{New}$ = $P_{@2W5}$ (Step 16) - $P_{@4W104}$ (Step 29)

= _____ - _____

= _____ dBm

**NOTE**

If the CW Test Path error (step 13) exceeds ±0.2 dB or either of the R69 and $R72_{New}$ values differs from the original values by more than ±0.2 dB, then remove the test equipment, restore normal cable connections, and perform paragraph 6-6.28.3.1 (CW Test Path Calibration) before proceeding. After correction, return to this point and enter a **Ø** as the final CW Test Path Error in Table 6-31 and in step 39 of this paragraph. Ensure new adaptation data is saved to disk.

34. If the CW Test Path required correction, ensure new adaptation data was entered and restart the RDA (TERP/RDAUP). Ensure the absence of LIN CHAN TEST SIGNALS DEGRADED or RF DRIVE TST SIGNAL DEGRADED alarms. If either alarm is present, perform paragraph 6-6.28.3.2 , the RF Drive Path Calibration, before proceeding. If either path (CW or RF Drive) was corrected or if data was not previously collected, it will now be necessary to collect new Table 6-27 data (top portion of table) using paragraph 6-6.28.1.4.2 .

35. The RF Drive Test Path error is the same as the CW LIN target delta average from Table 6-27.

    RF Drive Test Path error = _____ dB

    Enter as original value in Table 6-31.

36. To evaluate the Power Monitor error, perform the Power Monitor Consistency Check of paragraph 6-6.28.1.3.2 , steps 1 through step 6 or paragraph 6-6.28.1.3.3 , steps 1 through 8. Use the average M/WAVE LOSS from Table 6-27 as the measured value of M/WAVE LOSS. The Consistency error of paragraph 6-6.28.1.3.2 , step 6 or paragraph 6-6.28.1.3.3 , step 8 is the Power Monitor error.

    Power Monitor error = _____ dB

    Enter as original value in Table 6-31.

    Regardless of the Power Monitor Consistency error, the transmitter peak power shall be 700±50 kW and the average power at 4J25 shall be within the bounds stated in paragraph 6-6.28.1.3 . If not, perform applicable procedures specified within paragraph 6-6.28.1.3 before proceeding. After adjustments, repeat paragraph 6-6.28.1.3.2 or 6-6.28.1.3.3 and enter final value in Table 6-31.

37. Enter **DIPD<Tab>REC<Return>** on the RDA Applications Terminal to display Receiver performance data.

**NOTE**

The SHORT PULSE, LIN CHAN NOISE shall be 0.200E-05 ± 0.040E-05. Record as original value in Table 6-31. If not within the range stated, make a quarter turn adjustment clockwise to 4A9R1, the IF Amplifier/Limiter Gain adjustment. If the noise is too high, adjust 4A9R1 a quarter turn CCW. The LIN CHAN NOISE should change as a result, but it will take up to 1 minute to do so. It requires another DC Offset and Noise Calibration to register the effect of the change. When in Standby, the calibration is performed once per minute, but the noise is "scaled" so that not all of the adjustment effect will be reflected in each update following the calibration sequence. Therefore, it is desirable to wait approximately five minutes after each adjustment before proceeding. If significant adjustment is required or problems are suspected with the shared path, the entire section 6-6.24 Receiver Channel Alignment should be completed at this time. At a minimum, if adjustment is made to 4A9R1, the AGC threshold should be reverified (paragraph 6-6.24.4 ) and the R94/R96 path losses should be checked (paragraph 6-6.31 ) following completion of all Part 2 Calibration Checks.

38. After each adjustment, wait approximately five minutes for the noise level to stabilize. Proceed in this manner until the noise is within specification. Record final value in Table 6-31.

39. Calculate the Reflectivity (Ze) error as follows:

Ze error = CW Test Path error (Step 13) + RF Drive Test Path error (Step 35) + Power Monitor error (Step 36)

= _____ + _____ + _____ dB

= _____ dB

Enter as original value in Table 6-31.

40. If the Power Monitor error exceeds ± 0.2 dB, complete paragraph 6-6.28.1.3 . Then repeat this procedure beginning at step 36 and record final error in Table 6-31. Otherwise, proceed to the next step.

41. If the total Ze error is less than ±0.5 dB, proceed to step 44. Otherwise, if the error exceeds ±0.5 dB, proceed to the next step.

42. If the RF Drive Test Path error of step 35 is less than ±0.5 dB proceed to the next step. Otherwise, perform the RF Drive Path Calibration paragraph 6-6.28.3.2 and correct the Adaptation path loss parameters per paragraph 6-6.29 . If paragraph 6-6.28.3.2 has already been accomplished and the error still exceeds ±0.5 dB, then proceed to the next step. In this case, the final error will be compensated for by an adjustment of R46 in step 44 below.

43. If any adjustments or off-line calibrations were required (i.e., Receiver Gain, Transmitted Power or Power Monitoring, and/or RF Drive Path), recollect new Table 6-27 calibration values using paragraph 6-6.28.1.4.2 and then return to step 35 of this paragraph. If the RF Drive Path required calibration, use the new RF Drive Path Error (equal to CW delta average).

44. Using the CW LIN delta average from Table 6-27, make a correction to Adaptation Data value R46 (MISC CAL LOSS SHORT PULSE RF DRIVE TARGET) by changing the sign of the CW LIN delta average and adding it to R46.

**NOTE**

Example:
The average CW LIN delta = +0.8 dB. **R46 = -2.8 dB.** The proper correction of R46 is -0.8 dB. $R46_{New}$ = R46 + correction = -2.8 + (-0.8) = -3.6. After changing Adaptation data, it is necessary to save changes to disk, terminate the operational software, and bring the RDA up again to evaluate the change. Repeat adjustment of R46 as necessary until the CW LIN delta is definitely less than ±0.5 dB. Although a criteria of ±0.5 dB is used, it is best to get the average CW LIN delta as close to 0.0 dB as possible.

45. Collect MWAVE/LOSS, CW LIN deltas, and SHORT PULSE LIN CHAN SYSCAL for four volume scans after all corrective action has been taken and obtain an average for SHORT PULSE LIN CHAN SYSCAL. Record values on bottom section of Table 6-27. Reaccomplish steps 35 through 39 as necessary to compute a final Ze error and record final Ze and RF Drive Test Path errors in Table 6-31. If no corrective action was required, it is not mandatory that new data be collected.

46. Set R234 equal to SHORT PULSE LIN CHAN SYSCAL (average). This will cause CAL# to be very close to zero.

$R234_{New}$ = SHORT PULSE LIN CHAN SYSCAL (average)

= _____

47. Perform paragraph 6-6.29 to modify appropriate Adaptation Data parameters. Enter all Adaptation Data corrections as final values in Table 6-26.

Table 6–31. Off–Line Calibration Data

| | | | |
|---|---|---|---|
| **CHANNEL** _____ | | | |
| From 6–6.28.2.1 | REFLECTIVITY ERROR CHECK | | |
| From 6–6.28.2.1.1 | Reflectivity Error Evaluation and Correction | | |
| From 6–6.28.2.1.4 | Preferred Procedure | | |
| From 6–6.28.2.1.5 | Alternate Procedure | | |
| | CW Test Path Error | Original_____ | Final_____ |
| | RF Drive Test Path Error | Original_____ | Final_____ |
| | Power Monitor Error | Original_____ | Final_____ |
| | Lin Chan Noise | Original_____ | Final_____ |
| Note: If 4A9 gain is adjusted, ensure R94 and R96 are remeasured following completion of this procedure (see steps 37 and 38). | | | |
| | Ze Error | Original_____ | Final_____ |
| From 6–6.28.2.1.6 | LONG PULSE ERROR | | |
| | CW LIN delta | Original_____ | Final_____ |
| From 6–6.28.2.5 | REFLECTIVITY ACCURACY VERIFICATION | | |
| From 6–6.28.2.5.2 | PUP Data | | Final_____ |
| From 6–6.28.2.5.2 | RDA Data | | Final_____ |

6–6.28.2.1.5 Inclement Weather Procedure.

1. Terminate the applications software by entering **TERP<Tab>*password*<Return>** on the command and parameter lines. Press **<Shift>** and **<Port>** key **simultaneously** to display the RDA System Console.

2. Calibrate the power meter and HP8481A Power Sensor in accordance with paragraph 6–6.22.

3. Disconnect cable 4W104 from 4J16 at the inside top of Receiver Cabinet UD4.

4. Connect the HP8481A Power Sensor to 4W104 through a right angle Type–N and female–to–female Type–N adapter. Support the combination so as to avoid undue stress on the cable.

5. At the RDA System Console, bring up the RDASOT program by entering the following:

| Step | Operator Action | System Response/Comments |
|---|---|---|
| a. | **RDASOT<Return>** | RDASOT Main Menu (Mode Selection Menu for Redundant sites) is displayed. |
| b. | **1<Return>**<br>Redundant sites only | To select FULL mode for this procedure at Redundant sites. |
| c. | **4<Return>** | To select Manual Control and Display Menu. |
| d. | **2<Return>** | To select Control RCVR/Signal Proc; the TESTSIG Source Selection Menu will be displayed. |
| e. | **5<Return>** | To select CW Source;<br>CW Source Control Menu is displayed. |
| f. | **2<Return>**<br>if RCVR Injection Point is **not** Front End | To toggle RCVR Injection Point to **Front End**; CW Source Control Menu is again displayed. |
| g. | **6<Return>**<br>if Receiver Protector is **not** Normal | To toggle Receiver Protector to **Normal**; CW Source Control Menu is again displayed. |
| h. | **4<Return>** | To select Test Attenuation.<br>`Enter the new RF Test Attenuation Value (0...103 dB)` is displayed. |
| i. | **8<Return>** | To select 8 dB attenuation;<br>CW Source Control Menu is again displayed. |
| j. | **1<Return>** | To select Inject Signal. |

6. Measure and record the average power at 4W104.

   $P_{@4W104(measured)}$ = _____ dBm

7. Calculate the expected power at this point from the adaptation data recorded in Table 6–26 as follows:

$P_{@4W104(expected)}$ = R34 + R59 + R63 + R66 + R122

R34 _____
R59 _____
R63 _____
R66 _____
R122 _____

$P_{@4W104(expected)}$ = _____ dB

8. Calculate the equipment shelter error as the difference between the measured and expected values at 4W104 as follows:

$Error_{equip\ shelter}$ = $P_{@4W104(measured)}$ - $P_{@4W104(expected)}$

= _____ - _____

= _____ dB

9. Disconnect the power sensor from 4W104 and reconnect 4W104 to 4J16.

10. Disconnect cable 4W100 from 4J15 at the top of the receiver cabinet.

11. Connect the power meter and sensor combination to 4J15.

12. Measure the average power at 4J15.

$P_{@4J15}$ = _____ dBm

13. Disconnect the power sensor from 4J15 and reconnect cable 4W100 to 4J15.

14. Calculate the measured value of the antenna pedestal path loss as follows:

$PL_{ant\ ped\ (measured)}$ = $P_{@4J15}$ (step 12) - $P_{@4W104}$ (step 6)

= _____ - _____

= _____ dBm

15. Calculate the expected value of the antenna pedestal path loss as follows:

$PL_{ant\ ped\ (expected)}$ = R69 + R72 + R73 + R74 + R77 + R247 + R248

= _____ + _____ + _____ + _____ + _____ + _____ + _____

= _____ dB

16. Calculate the antenna pedestal path loss error as follows:

$Error_{ant\ ped}$ = $PL_{ant\ ped\ (measured)}$ - $PL_{ant\ ped\ (expected)}$

= _____ - _____

= _____ dB

17. Adjust R69 and R77 to correct the amount of antenna pedestal path loss error as follows:

    $R69_{New}$ = R69 + 1/2 $Error_{ant\ ped}$

    = _____ + 1/2_____

    = _____

    $R77_{New}$ = R77 + 1/2 $Error_{ant\ ped}$

    = _____ + 1/2_____

    = _____ dB

    Example:

    If R69 = -4.70; R77 = -4.47; and the $Error_{ant\ ped}$ = +0.18 dB;
    then $R69_{New}$ = -4.61 and $R77_{New}$ = -4.38.

18. Update R69 and R77 adaptation data using paragraph 6-6.29 .

19. If the $Error_{equip\ shelter}$ (step 8) exceeds 0.2 dB, proceed to paragraph 6-6.28.3.1.2 . Perform steps 33 through 54 to correct the error.

20. Calculate the CW Test Path Error as follows:

    CW Test Path Error = $Error_{equip\ shelter}$ (step 8) + $Error_{ant\ ped}$ (step 16)

    = _____ + _____

    = _____ dB

    Enter in Table 6-31 as CW Test Path Error Original. The final value of the CW Test Path Error should be the final sum of the equipment shelter error plus the pedestal error. If the equipment shelter error was less than 0.2 dB, the final CW Test Path error will be the value recorded in step 8.

21. If the calculated initial CW Test Path error exceeded 0.2 dB, recollect new Table 6-27 calibration values (top portion) using paragraph 6-6.28.1.4.2 . If the error is less than 0.2 dB, it is not necessary to collect new data.

22. The RF Drive Test Path error is the same as the CW LIN target delta average from Table 6-27.

    RF Drive Test Path error = _____dB

    Enter as original value in Table 6-31.

23. To evaluate the Power Monitor error, perform the Power Monitor Consistency Check of paragraph 6-6.28.1.3.2 , steps 1 through step 6 or paragraph 6-6.28.1.3.3 , steps 1 through 8. Use the average M/WAVE LOSS from Table 6-27 as the

measured value of M/WAVE LOSS. The Consistency error of paragraph 6-6.28.1.3.2 , step 6 or paragraph 6-6.28.1.3.3 , step 8 is the Power Monitor error.

Power Monitor error = _____ dB

Enter as original value in Table 6-31.

Regardless of the Consistency error, the transmitter peak power shall be 700±50 kW and the average power at 4J25 shall be within the bounds stated in paragraph 6-6.28.1.3 . If not, perform applicable procedures specified within paragraph 6-6.28.1.3 before proceeding. If adjustment is required, proceed to NWS EHB 6-51 1, paragraph 7.8.6.10.4, Calibration of Transmitter Power Monitor UD4A26 and Antenna Power Monitor UD2A5. After adjustments, repeat paragraph 6-6.28.1.3.2 or 6-6.28.1.3.3 and enter final value in Table 6-31.

24. Terminate RDASOT. At the RDA System Console, enter **Ø<Return>** until RDASOT is terminated.
25. At the RDA System Console, enter **RDAUP<Return>** to bring up the operational software.
26. Press the **<Shift>** and **<Port>** keys **simultaneously** to access the RDA Applications Terminal.
27. Enter **DIPD<Tab>REC<Return>** at the RDA Applications Terminal command and parameter lines to display Receiver performance data.
28. The SHORT PULSE, LIN CHAN NOISE shall be 0.200E-05 ±0.040E-05. If not, adjust the IF Amplifier/Limiter gain adjustment 4A9R1 a quarter turn clockwise to raise the noise or counterclockwise to lower the noise. The LIN CHAN NOISE should change as a result, but it will take up to 1 minute to do so. It requires another DC Offset and Noise Calibration to register the effect of the change. When in Standby, the calibration is performed once per minute, but the noise is “scaled” so that not all of the adjustment effect will be reflected in each update following the calibration sequence.

    If significant adjustment is required or problems are suspected with the shared path, the entire section 6-6.24 Receiver Channel Alignment should be completed at this time. At a minimum, if adjustment is made to 4A9R1, the AGC threshold should be reverified (paragraph 6-6.24.4 ) and the R94/R96 path losses should be checked (paragraph 6-6.31 ) following completion of all Part 2 Calibration Checks.

    Record final value of LIN CHAN NOISE in Table 6-31.

29. Calculate the Reflectivity (Ze) error as follows:

    Ze error = CW Test Path error (Step 20) + RF Drive Test Path error (Step 22) + Power Monitor error (Step 23)

    = _____ + _____ + _____ dB

    = _____ dB

    Enter as original value in Table 6-31.

30. If the Power Monitor error exceeds ±0.2 dB, complete paragraph 6-6.28.1.3 . Then repeat this procedure beginning at step 23 and record final error in Table 6-31. Otherwise, proceed to the next step.

31. If the total Ze error is less than ±0.5 dB, proceed to step 34. Otherwise, if the error exceeds ±0.5 dB, proceed to the next step.

32. If the RF Drive Test Path error of step 22 is less than ±0.5 dB, proceed to the next step. Otherwise, perform the RF Drive Path Calibration paragraph 6-6.28.3.2 and correct the Adaptation path loss parameters per paragraph 6-6.29 . If paragraph 6-6.28.3.2 has already been accomplished and the RF Drive Test Path error still exceeds ±0.5 dB, then proceed to the next step. In any of these cases, the final error will be compensated by adjustment of R46 in step 34 below.

33. If any adjustments or off-line calibrations were required (i.e., Receiver Gain, Transmitted Power or Power Monitoring, and/or RF Drive Path), recollect new Table 6-27 calibration values using paragraph 6-6.28.1.4.2 and then proceed to the next step.

34. Evaluate the final average RF Drive Test Path error (same as CW LIN target delta). Make a correction to Adaptation Data value R46 (MISC CAL LOSS SHORT PULSE RF DRIVE TARGET) by changing the sign of the CW LIN delta average and adding it to R46.

**NOTE**

Example:

The average CW LIN delta = +0.8 dB. The proper correction of R46 is -0.8 dB. R46 = -2.8 dB.

$R46_{New}$ = R46 + correction

= -2.8 +(-.8)

= -3.6

After changing Adaptation Data, it is necessary to save changes to disk, terminate the operational software, and bring the RDA up again to evaluate the change. Repeat adjustment of R46 as necessary until the CW LIN delta is definitely less than ±0.5 dB. Although a criteria of ±0.5 dB is used, it is best to get the average CW LIN delta as close to 0.0 dB as possible.

35. Collect MWAVE/LOSS, CW LIN deltas, and SHORT PULSE LIN CHAN SYSCAL for four volume scans after all corrective action has been taken and obtain an average for SHORT PULSE LIN CHAN SYSCAL. Record values on bottom section of Table 6-27. Reaccomplish steps 22 through 29 as necessary to compute a final Ze error and record final Ze error in Table 6-31. If no corrective action was required, it is not mandatory that new data be collected.

36. Set R234 equal to SHORT PULSE LIN CHAN SYSCAL (average). This will cause CAL# to be very close to zero.

    $R234_{New}$ = SHORT PULSE LIN CHAN SYSCAL (average)

    = _____

37. Perform paragraph 6-6.29 to modify appropriate Adaptation Data parameters. Enter all Adaptation Data corrections as final values in Table 6-26.

6-6.28.2.1.6 Long Pulse Data Correction. After having corrected the Short Pulse data as detailed in the previous paragraphs, the Long Pulse operation shall be checked and corrected as follows:

1. Bring up the operational software by entering **RDAUP<Return>** on the RDA System Console.
2. Press **<Shift>** and **<Port>** keys **simultaneously** to access the Applications Terminal function. The Main Menu will appear.
3. Enter **SELP<Tab>31<Return>** on the command and parameter lines.
4. Enter **OPER<Return>** on the command line when the RDA status reaches STBY to initiate the operate mode. Check that the STATUS indicates 31/L, which indicates VCP31, the Long Pulse Clear Air operational mode.
5. Check the Alarm field of the RDA Summary Status for the presence of either or both of these alarms: LIN CHAN TEST SIGNALS DEGRADED or LIN CHAN RF DRIVE TST SIGNAL DEGRADED. Either of these alarms will inhibit updating of SYSCAL and prevent proper operation of this procedure. **If either or both of these alarms occur, adaptation data R237 (LIN CHAN TEST TGT CONSISTENCY DEGRADE LIMIT) must be changed from it's default value of 2.0 up to it's maximum value of 10.0.** This action inhibits the generation of these alarms. Use the procedural method of paragraph 6-6.29 to effect this change. **At the conclusion of this procedure, R237 must be set back to it's default value of 2.0.**
6. After about 20 minutes, the second Volume Coverage Pattern should complete. This is recognizable by the fact that the EL position should change from 4.5 degrees down to 0.5 degrees. When this happens, collect the top portion of Table 6-32 data using the Display Performance Data (DIPD) capability of the RDA. Reference paragraph 6-6.28.1.4.2 for collection instructions.
7. Record the data in Table 6-32 for three volume scans.
8. At the Applications Terminal command and parameter lines:
   a. Enter **STBY<Return>** to terminate the operate mode.
   b. Enter **TERP<Tab>*password*<Return>** to terminate the operational software.
9. Press the **<Shift>** and **<Port>** keys **simultaneously** to shift to the System Console.

10. At the RDA System Console, bring up the RDASOT program by entering the following:

| Step | Operator Action | System Response/Comments |
|---|---|---|
| a. | **RDASOT<Return>** | RDASOT Main Menu (Mode Selection Menu for Redundant sites) is displayed. |
| b. | **1<Return>**<br>Redundant sites only | To select FULL mode for this procedure at Redundant sites. |
| c. | **1<Return>**<br>if to Log session is desired | To Log session. **Otherwise skip to step e.** |
| d. | **1<Return>** | To Log session to disk, if desired. |
| e. | **3<Return>** | To select Calibration Menu. |
| f. | **4<Return>** | To select RCVR/SP Calibration Routines; the RSP Calibration Selection Menu will be displayed. |
| g. | **2<Return>** | To select Reflect Error Estimate-LP. |

11. At the prompts, enter the data recorded in Table 6-32 for each of the three scans. Make sure to enter minus signs for negative values. Enter **<Return>** after each data entry item.

| PARAMETER | ENTER AS: |
|---|---|
| CAL# | Table 6-32 value |
| XMTR PK PWR | XXX (kW) |
| ANT PK PWR | XXX (kW) |
| CW LIN EXP | XX.X (dBZ) |
| CW LIN MEAS | XX.X (dBZ) |
| LP LIN SYSCAL | XX.X (dB) |

12. After all data is entered, you will be presented with a table of entered data. At this point, you can correct data entries if desired. Enter ***line* #<Return>** and ***new value*<Return>** if necessary or enter **Ø<Return>** if all values are correct. Proceed in this manner until data for all three VCP scans is entered.

13. The RDASOT routine will display the LONG PULSE DATA CORRECTION SUMMARY. It will provide the average data for the three VCP scans and the R234 and R43 adaptation values. From the CW LIN EXP and MEAS values, the routine displays the CW LIN delta AVG. Fill-in these values in step 14 and on Table 6-32.

14. Record the following: (more than one iteration of the recording process may be necessary as specified in step 18 below).

XMTR PK PWR AVG = _____ _____ _____

ANT PK PWR = _____ _____ _____

CW LIN delta AVG = _____ _____ _____

LP LIN CHAN SYSCAL AVG = _____ _____ _____

R234 = _____

R43 = _____

15. Enter **Ø<Return>** until RDASOT terminates. If a permanent record of the procedure is desired, it is necessary to rename file PØ6RECOD.DAT to some other name each time RDASOT is exited or else the data file will be overwritten when RDASOT is reentered. To do this, enter **REN PØ6RECOD.DAT,*XXXXXX*.DAT** where XXXXXX.DAT is the new name you have selected.

16. If the transmitter peak power is outside the range of 650 to 750 kW, the PFN Voltage for Long Pulse must be adjusted per NWS EHB 6-511 paragraph 7.8.6.10.5. Correct if necessary. Otherwise proceed to the next step.

17. If the CW LIN delta AVG from step 14 exceeds ±0.5 dB, perform the measurement of TR8 and R36 as described in NWS EHB 6-511 paragraph 7.8.6.4.2, steps 1 through 29 (excluding steps 17 and 21) for TR8 followed by paragraph 7.8.6.6, steps 10 through 15 for R36. Correct the current Adaptation Data as required using paragraph 6-6.29 . Otherwise, proceed to step 18.

18. If corrective action is required in steps 16 and/or 17, repeat the data collection procedure of steps 1 through 15. If the CW LIN delta AVG is less than ±0.5 dB, proceed to step 20. If not, make a correction to R43 equal but opposite in sign to the most recent CW LIN delta AVG as follows:

Correction = - CW LIN delta AVG

$R43_{New}$ = $R43_{old}$ (step 13) + Correction

= _____ + _____

= _____

**NOTE**

Example:
The CW LIN delta AVG most recent = +0.4 dB, R43 = -2.8 dB. The value of R43 new is as follows:

Correction = - CW LIN delta AVG

= - (0.4 dB)

= - 0.4 dB

$R43_{New}$ = $R43_{old}$ (step 13) + Correction

= -2.8 + (-0.4)

= -3.2

After correcting the Adaptation Data using paragraph 6-6.29 procedures, it is necessary to save changes to disk, terminate the operational software, and bring the RDA up again to evaluate the change. Repeat adjustment of R43 if necessary until CW LIN delta AVG is less than ±0.5 dB.

19. After all corrective action has been taken as described above, repeat steps 1 through 15 to collect a new set of data for three volume scans and record it on the bottom portion of Table 6-32.

20. Calculate a new value for R236 so that the sum of R234 and R236 shall be equal to LONG PULSE, LIN CHAN SYSCAL average (most recent value obtained in step 14, recorded on bottom portion of Table 6-32). This will cause CAL# to be very close to zero in Long Pulse operation.

$R236_{New}$ = LONG PULSE, LIN CHAN SYSCAL(average) - R234

= _____ - _____

= _____

**NOTE**

Example:
CAL# average = +2.4
R234 = 9.4 in adaptation data
R236 = -7.2 in adaptation data
LONG PULSE, LIN CHAN SYSCAL aver = +4.6 (from Table 6-32)

Calculation:
In order to reduce CAL# to zero,
R234 + R236 must equal LONG PULSE, LIN CHAN SYSCAL.

| | |
|---|---|
| R234 +R236 | = +4.6 |
| $R236_{New}$ | = +4.6 - R234 |
| $R236_{New}$ | = +4.6 - 9.4 = -4.8 |

It is therefore necessary to increase R236 from -7.2 up to -4.8 in Receiver Adaptation Data.

21. Enter **RDAUP<Return>** at the RDA System Console.

22. Correct R236 in adaptation data per paragraph 6-6.29 . Correct the value of R237 back to it's default value of 2.0 if it was changed in step 5.

Table 6-32. On-Line Calibration Data, Long Pulse

**CHANNEL** _____

**BEFORE ADJUSTMENT**

| Parameter | Scan1 | Scan2 | Scan3 | AVG | |
|---|---|---|---|---|---|
| CAL# | _____ | _____ | _____ | _____ | R234 =_____ |
| XMTR PK PWR | _____ | _____ | _____ | _____ | |
| ANT PK PWR | _____ | _____ | _____ | _____ | R236 = _____ |
| CW LIN EXP | _____ | _____ | _____ | _____ | |
| MEAS | _____ | _____ | _____ | _____ | R234 + R236 = _____ |
| delta(MEAS-EXP) | _____ | _____ | _____ | _____ | |
| LP LIN CHAN SYSCAL | _____ | _____ | _____ | _____ | |

**AFTER ADJUSTMENT**

| Parameter | Scan1 | Scan2 | Scan3 | AVG | |
|---|---|---|---|---|---|
| CAL# | _____ | _____ | _____ | _____ | R234 = _____ |
| XMTR PK PWR | _____ | _____ | _____ | _____ | |
| ANT PK PWR | _____ | _____ | _____ | _____ | R236 = _____ |
| CW LIN EXP | _____ | _____ | _____ | _____ | |
| MEAS | _____ | _____ | _____ | _____ | R234 + R236 = _____ |
| delta(MEAS-EXP) | _____ | _____ | _____ | _____ | |
| LP LIN CHAN SYSCAL | _____ | _____ | _____ | _____ | |

6-6.28.2.2 Minimum Discernible Signal. This check tests the Receiver Front End sensitivity and the SHORT PULSE, LIN CHAN NOISE. These checks, along with the performance of the Reflectivity Error Check of paragraph 6-6.28.2.1 , verify peak performance of the WSR-88D Receiver.

**NOTE**

Disconnect narrowband communications before beginning this procedure.

6-6.28.2.2.1 Equipment and Tools Required.

1. RF Signal Generator, Gigatronics Model 600/.01-8 Option 8 or equivalent
2. Power Meter HP436A
3. Power Sensor HP8484A or HP8481D
4. Test cable, Type-N, 8 to 10 ft long
5. Adapter, Type-N, female-to-female
6. Attenuator, Type-N, 30 dB

6-6.28.2.2.2 Procedure. This procedure applies ONLY to operational sites. It is not intended for performance on training sites. The following procedure assures that the noise floor of the Receiver/Signal Processor as reflected in SHORT PULSE, LIN CHAN NOISE is set properly. The minimum discernible signal (MDS) is then measured.

1. Enable local RDA control from the MSCF as follows:

    a. In the RPG Control/Status window (HCI Main Window) (Active/Controlling channel only for FAA Redundant systems), click on the Control block in the RDA container to open the RDA Control/Status window and observe the RDA Control: field. The RDA Control: field should indicate RPG assuming the RPG is in control.

    b. In the RDA Control area of the RDA Control/Status window, click on **Enable Local (RDA)** to allow control at the RDA.

    c. Click on the **Close** button in the upper left hand corner of the RDA Control/Status window to close the window.

2. Proceed to the RDA.

3. At the RDA Applications Terminal, enter **RELC<Return>** to request local control.

4. Change Receiver Adaptation Data R219.

    a. Enter **ICRA<Space>*password*<Return>** at the applications terminal. The default password is "*HIGH*".

    b. Enter **SF<Return>** to select file.

    c. Enter **C<Return>** to select current file.

    d. Enter **R<Return>** to select Receiver Adaptation Data.

    e. Enter **B<Return>** until item 219 is displayed.

    f. Enter **C<Space>219<Return>** to access R219 for purposes of change.

    g. Enter **1.00<Return>** and check that R219 has been changed from it's normal value of 0.33 to 1.00. This changes the digital smoothing of the LIN CHAN NOISE from 0.33 to 1.00. It has the effect of speeding up the response of the noise algorithm in software.

5. Save changes to disk.

    a. Enter **A<Return>** to return to the Adaptation Edit Control menu.

    b. Enter **SC<Return>** to save the change to disk.

c. Enter **CF<Return>** to return to the Choose File for Next Restart Menu.

d. Enter **C<Return>** for current.

e. Enter **STBY<Return>** to change the mode to standby.

f. Enter **TERP<Space>*password*<Return>** to terminate the operational software.

g. Press **<Shift>** and **<Port>** keys **simultaneously** to access the RDA System Console.

h. When the tasks cancel, enter **RDAUP<Return>** to bring up the operational software.

i. Press **<Shift>** and **<Port>** keys **simultaneously** to access the Applications Terminal.

6. Wait until STAT(us) indicates STBY.

**NOTE**

Calibrations are performed about once per minute in Standby with the exception of those which use the Delayed Klystron Output.

7. Set up the RF Signal Generator test equipment as follows:

   a. Turn on the generator and set signal generator mode for CW. (AM, FM, and pulse rates should be placed in the OFF position for CW mode.)

   b. Set signal generator frequency to the site frequency PLUS 75 kHz.

8. Connect the 30 dB reference attenuator to HP8484A Power Sensor.

9. Calibrate the power meter and the power sensor in accordance with paragraph 6-6.22 .

10. Connect the power sensor directly to the signal generator without the reference attenuator.

11. Set the signal generator RF level output amplitude so that the power meter reads -25 dBm ±.25 dBm. Note the power reading on the meter.

    $P_{@meter}$_____ dBm

12. Disconnect the power sensor from the signal generator.

**NOTE**

In the following step, do not use the reference attenuator.

13. Connect a regular 30 dB attenuator to signal generator.

14. Connect test cable to attenuator.

15. Connect the power sensor to the end of the test cable.

16. Measure the resultant average power on the power meter.

    $Power_{avg}$ = _____ dBm

**NOTE**

The power indication may be slightly unstable. Average the least significant digits.

17. Calculate the difference between the step 11 value and the output of the test cable. This is the Correction Factor due to the use of the cable and attenuator. Evaluate it as follows:

    $Correction\ Factor_{(cable + attenuator)}$ = $Power_{avg}$ (step 16) - $P_{@meter}$ (step 11)

    = _____ - _____

    = _____ dBm

18. Remove the attenuator and cable.

19. Set the signal generator output to indicate -50 dBm on output dial.

20. Connect the power sensor directly to the output of the signal generator.

21. Read the power meter and note power reading.

    $Meter\ Reading_{-50\ dBm\ Dial}$ = _____ dBm

22. Calculate the correction due to the dial error as follows:

    $Correction\ Factor_{dial}$ = $Meter\ Reading_{-50\ dBm\ dial}$ - (-50 dB)

    = _____ + 50 dB

    = _____ dB

**NOTE**

For example, if the power meter indicates -51.27 dB, the dial correction factor would be -1.27 dB.

23. Calculate the Total Correction Factor as:

    $Correction\ Factor_{Total}$ = $Correction\ Factor_{(cable + attenuator)}$ + $Correction\ Factor_{dial}$

    = _____ + _____

    = _____ dB

**NOTE**

For example, if the correction for the cable plus attenuator was -31.17 dB and the correction factor for the dial was -1.27 dB, the total correction factor would be -32.44 dB.

24. Reconnect the attenuator and test cable to the signal generator.

25. Enter **DIPD<Tab>REC<Return>** on the RDA Applications Terminal to display Receiver performance data.

**NOTE**

The SHORT PULSE, LIN CHAN NOISE shall be 0.200E-05 ±0.040E-05. Assuming that section 6-6.28.2.1 was just completed, the SHORT PULSE, LIN CHAN NOISE should already be in tolerance. If this is not the case, return to paragraph 6-6.28.2.1.4 and perform step 37.

26. If adjustment is necessary, wait a few minutes for the noise level to stabilize. Proceed in this manner until the noise is within specification.

**NOTE**

If adjustment of 4A9R1 is required, the path losses R94 and R96 should be redone in accordance with paragraph 6-6.31 as well as the AGC Threshold Adjustment of paragraph 6-6.24.4 , but defer these until the rest of this procedure is completed.

27. Record the final value of SHORT PULSE, LIN CHAN NOISE.

SHORT PULSE, LIN CHAN $NOISE_{(Noise)}$ = _____

28. In the following step, a cable will be disconnected which will disrupt the calibration process. If the cable is disconnected while the system is performing a calibration (approximately once per minute in Standby), a corruption of the calibration process could occur which may cause incorrect values to be displayed when the test cable is connected. Therefore, the system cable should be disconnected and the test cable connected between the actual calibration periods. To note when the actual calibration occurs, open the right front RDADP door and note the green lights on the bottom of the PSPI card in slot 14 of the RDASC. The calibration period occurs when the bottom green light(s) flicker.

29. At the top inside of the Receiver Cabinet UD4, disconnect the test signal cable 4W104 from 4J16.

30. Connect the test cable to 4J16.

31. Set the output amplitude of the signal generator dial reading to -50 dBm.

32. Within two minutes, the alarm area of the RDA Summary Status should indicate several calibration type alarms. Note the time at which this happens as “TØ” in the

following chart and enter **DIPD<Tab>REC<Return>**. Record the SHORT PULSE, LIN CHAN NOISE in the space provided to the right of TØ. Enter **DIPD<Tab>REC<Return>** at one minute intervals and record the SHORT PULSE, LIN CHAN NOISE in the appropriate space to the right of the time intervals.

**NOTE**

The value displayed represents the normal noise plus the added CW signal. In Standby, the DC Offset and Noise calibration is performed every minute. It is expected that the SHORT PULSE, LIN CHAN NOISE will increase from it's normal value of 0.2 ±.04E-05 and that the average value during the 10 minute monitoring period will be in the range of 0.1 to 0.5E-04. Values greater than 0.1E-03 (such as 0.685E-03, .477E-02, or .232E-01) are anomalies and should not be included in the averaging process. Stop collecting data when values greater than .1E-03 are displayed. Average the values which are less than 0.1E-03 by summing the individual values and dividing by the number of values summed.

If the first reading is not representative of the other readings, it may be left out of the averaging process. Also, when three or four consistent readings are obtained, data collection can cease and the consistent values can be averaged to determine the MDS. For example, if readings of .112E-04, .154E-04, .158E-04, .159E-04, and .157E-04 are obtained, the first reading should be thrown out and then calculate the average of the remaining four readings.

| TIME | SHORT PULSE, LIN CHAN NOISE |
|---|---|
| TØ: | _____ |
| TØ + 1 min | _____ |
| TØ + 2 min | _____ |
| TØ + 3 min | _____ |
| TØ + 4 min | _____ |
| TØ + 5 min | _____ |
| TØ + 6 min | _____ |
| TØ + 7 min | _____ |
| TØ + 8 min | _____ |
| TØ + 9 min | _____ |

TØ + 10 min _____

33. Calculate the average value of SHORT PULSE, LIN CHAN NOISE from the values recorded in step 32. This represents the NOISE + CW measurement.

    SHORT PULSE, LIN CHAN NOISE$_{(Noise + CW)}$ = _____

**NOTE**

This time the displayed number is the noise plus the added CW.

34. Terminate the applications software by entering **TERP<Tab>*password*<Return>**.

35. Press the **<Shift>** and **<Port>** keys **simultaneously** to shift to the RDA System Console. Allow the tasks to cancel before proceeding.

36. At the RDA System Console, bring up the RDASOT program by entering the following:

| Step | Operator Action | System Response/Comments |
|---|---|---|
| a. | **RDASOT<Return>** | RDASOT Main Menu (Mode Selection Menu for Redundant sites) is displayed. |
| b. | **1<Return>**<br>Redundant sites only | To select FULL mode for this procedure at Redundant sites |
| c. | **3<Return>** | To select Calibration Menu. |
| d. | **4<Return>** | To select RCVR/SP Calibration Routines; the RSP Calibration Selection Menu will be displayed. |
| e. | **3<Return>** | To select Min Discernible Sig Check. |

37. At the prompts, enter the data recorded in steps 11, 16, 21, 27, and 33. Ensure that you enter minus signs for negative values. Enter the data as follows:

| PARAMETER | ENTER AS: |
|---|---|
| P@METER IN dB (step 11) | XX.XX (dB) |
| AVG POWER ON POWER METER IN dB (step 16) | XX.XX (dB) |
| METER READING, –50 dBm DIAL (step 21) | XX.XX (dB) |
| LIN CHAN SHORT PULSE NOISE ONLY (step 27) | .XXXE–XX (value and exponent) |
| LIN CHAN SHORT PULSE NOISE + CW (step 33) | .XXXE–XX (value and exponent) |

The RDASOT routine will display the Minimum Discernible Signal (MDS) referenced to 2A3J1, the input to Receiver Protector 2A3.

**NOTE**

The MDS must be less than –112 dBm (e.g., –115 dBm). Larger values (e.g., –110 dBm) may indicate excessive noise or loss of gain in the receiver. Reverify test equipment setup and measurements before troubleshooting. If the gain of 4A9 was changed, refer to paragraph 6–6.31 to measure new adaptation path loss values for R94 and R96.

38. Remove test equipment connected to 4J16.
39. Reconnect normal system cable to 4J16.
40. Enter **Ø<Return>** until RDASOT terminates.
41. Enter **RDAUP<Return>** at the RDA System Console.
42. Press the **<Shift>** and **<Port>** keys **simultaneously** to shift to the Applications Terminal.
43. Repeat step 4 and step 5 procedures changing the R219 value back to a value of .33 in step 4.g.

6–6.28.2.3 Correction of System Noise Temperature (R35). Perform paragraph 6–6.28.3.3 following the replacement of the Receiver Noise Source UD4A25.

6–6.28.2.4 DELETED.

Pages 6–931 through 6–938 DELETED

6–6.28.2.5 CW Substitution Reflectivity Accuracy Verification through MSCF and RPG. This procedure utilizes a test signal generator set to the CW mode whose frequency output is set to the site RF frequency as a signal source for the verification of Reflectivity accuracy. After having established SHORT PULSE, LIN CHAN SYSCAL normally in the OPERATE mode, the signal generator is connected in place of the test signals which go to the Receiver Protector 2A3J3 as shown in Figure 6–83 sheet 1. From range measurements made from a base Reflectivity product, an expected value of Reflectivity is calculated and compared to the measured Reflectivity value and a value of Reflectivity Error is derived. After correction, as performed in previous paragraphs, the Reflectivity error shall be verified as less than ±1.0 dB.

6–6.28.2.5.1 Equipment and Tools Required.

1. RF Signal Generator, Gigatronics Model 600/.01–8 Option 8 or equivalent
2. Power Meter HP436A or equivalent
3. Power Sensor, HP8484A or equivalent
4. Power Sensor, HP8481A or equivalent
5. Test cable, Type–N, 8 to 10 feet long
6. Adapter, Type–N, female–to–female
7. Calculator, Scientific

6–6.28.2.5.2 Procedure.

**WARNING**

Maintenance procedures require the cessation of normal activities, including narrowband communications to the outside world. With

the exception of the first dial line used for this test, all other narrowband communications should be disconnected before performing this procedure. Failure to diligently complete the initial steps in the following procedure may compromise proper system operation.

**NOTE**

The current RDASOT software program contains several references to the PUP. All reference to the PUP are obsolete and now refer to any display source for WSR–88D product data. For the purpose of this procedure, the product data may be displayed via the HCI on the MSCF or RPG Maintenance Position Terminal (located inside the RPGPCA cabinet).

**NOTE**
**DOD and FAA Systems**

All the information and command/control access required to complete this procedure is available at the local RDA site. There is no need for outside data or command entry assistance.

**NOTE**

If there are any active clutter suppression regions downloaded, the reflectivity data could be distorted or eliminated within those regions. The following steps will activate a “cwsub” clutter region (no clutter filtering) during the testing procedure and upon completion of the procedure, additional steps will be used to reload the original file being used.

1. At the MSCF, or RPG Maintenance Position Terminal* (located inside the RPGPCA cabinet), in the Applications area on the right hand side of the RPG Control/Status window (HCI Main Window), click on the **Clutter Regions** button to open the Clutter Regions window.

**NOTE***

To start the HCI on the RPG Maintenance Position Terminal, from a Terminal window type, **hci&<CR>**.

2. In the upper right hand corner of the Clutter Regions window, click on the **padlock** button to open the Password window.

3. In the LOCA area at the center of the Password window, click on **URC**.

4. In the Password window, click in the light blue Password box to make it active, and then enter the correct ***URC PASSWORD*<CR>**. The Password window will disappear and then the Clutter Regions window will be unlocked and ready for editing.

5. The Title Bar of the Clutter Regions window lists the current active clutter suppression region file name. Record the name of this clutter suppression region file:

   _____

   If the current active clutter suppression region file name is “cwsub” then skip to Step 9.

6. Near the top left corner of the Clutter Regions window, click on the **File** button to open the Clutter Region Files window.

7. In the Clutter Region Files window, locate and double click on a file titled cwsub to select the test clutter regions file. **If the file cwsub does not exist,** proceed to step a. below to create one. Once the cwsub file is properly selected, the Title Bar of the Clutter Regions window changes and displays the cwsub file name. Then click on the **Close** button to close the Clutter Region Files window. Use the following steps to create and save a cwsub clutter regions file to be used for performing the cwsub procedure.

   a. In the Clutter Regions Files window, click on **New**. Note, a new Clutter Regions – File: <>: Last Modified: window will appear behind the current Clutter Regions Files window. This new window will be used to set the parameters for the new cwsub file.

   b. Click on the **Close** button in the upper left hand corner of the Clutter Regions Files window to close the window and activate the new File: <> window.

   c. In the Clutter Regions – File: <> window, in the Low Elevation Segment portion of the window (near the bottom), locate the Select Code box. Click on the blue button labeled **Bypass Map** twice until **None** is selected. Notice that the Doppler and Surveillance Channel circles on the right side of the window are black, indicating all clutter filtering is shut off. The default settings for this window are as follows:

      Segment: **Low**
      Mode: **Sector**
      Units: **NM**
      Background: **R[19] – Base Reflectivity: 16 level/0.54 nm**

      If the default settings above are not as indicated, click on the appropriate button to make it so.

   d. On the Title Bar, click on the **File** button to open the Clutter Regions Files window.

   e. In the Clutter Regions Files window, click on the **Save** button. In the warning_popup window, click on **Yes**. Then click on the light blue Label box and type in **cwsub**. Then click on the **Accept** button on the Title Bar to save the cwsub file.

f. Click on the **Close** button in the upper left hand corner of the Clutter Regions Files window to close the window.

g. Verify the newly created cwsub file is the current file listed on the active Clutter Regions – File: cwsub window. If so, proceed to the next step to download the cwsub file to the RDA.

8. In the Clutter Regions window, click on the **Download** button and then click the **Yes** selection in the subsequent warning_popup window. This will send the cwsub clutter region file to the RDA, which will take effect at the beginning of the next VCP.

9. Click on the **Close** button in the upper left hand corner of the Clutter Regions window to close the window.

10. In the RPG Control/Status window (HCI Main Window), click on the **Comms** button in the USERS container to open the Product Distribution Comms Status window.

11. Disable ALL comms lines except Dial–in Line 1. Execute the following to accomplish this:

    a. Under the Product Distribution Lines area, ensure the Sorted By Line option is highlighted.

    b. In the Product Distribution Lines area, position the cursor on Line 2, press and hold down the left mouse button while dragging the cursor down the page. This action will highlight all the line entries on the displayed page.

    c. In the Line Control area, select the **Disconnect** command button and then click the **Yes** selection in the subsequent warning_popup window. This action will disable the highlighted (selected) comms lines.

    d. Under the Product Distribution Lines area, click the **Next** option to display page 2 of the Product Distribution Lines menu.

    e. In the Product Distribution Lines area, position the cursor on the first line definition, press and hold down the left mouse button while dragging the cursor down the page. This action will highlight all the line entries on the displayed page.

    f. In the Line Control area, select the **Disconnect** command button and then click the **Yes** selection in the subsequent warning_popup window. This action will disable the highlighted (selected) comms lines.

    g. Click on the **Close** button in the upper left hand corner of the Product Distribution Comms Status window to close the window.

12. Enable local control of the radar, by executing the following steps:

    a. In the RPG Control/Status window (HCI Main Window), click on the **Control** button in the “RDA” container to open the RDA Control/Status window.

b. In the “RDA Control” area of the RDA Control/Status window, click on the **Enable Local (RDA)** selection to perform one step of the two step process of transferring control to the RDA.

c. Click on the **Close** button in the upper left hand corner of the RDA Control/Status window to close the window.

13. Proceed to the RDA.

14. Calibrate the power meter and the HP8484A Power Sensor with reference attenuator per paragraph 6–6.22. Upon completion of the calibration, ensure the power meter dBm MODE button is pressed in.

15. Turn on the signal generator and allow it to warm up before proceeding. Connect the Type–N cable to the signal generator output. Set the signal generator output amplitude to –40 dBm and the frequency to read the site frequency. Connect the free end of the cable to the power sensor (without reference attenuator) through the Type–N female–to–female adapter. Refine the signal generator output amplitude so that the power meter reads as close to –40 dBm as possible (i.e., ±0.1 dBm). Remove the adapter from the cable. Record the amplitude at the end of the cable as $P_{in}$.

    $P_{in}$ = _____ dBm

16. At the RDA Applications Terminal, enter **RELC<Return>** to request local control.

17. Ensure that all new Adaptation Data from previous calibration procedures has been updated in the current adaptation data file before proceeding.

18. Prior to the injection of the test signal, it is imperative that SHORT PULSE, LIN CHAN SYSCAL be established in VCP21 operation. If the RDA is in another VCP, enter **STBY<Return>**, then **SELP<Space>21<Return>** on the command and parameter lines. Enter **OPER<Return>** to start operation in the VCP21 mode. If the RDA is already in the VCP21 OPERATE mode, proceed to the next step.

19. Check that the wideband link is normally connected by the appearance of RVW next to the RPG LINK entry of the RDA Summary Status on the applications terminal. If this is not the case, take corrective action to establish wideband connection to the RPG.

20. Establish a stable SYSCAL by collecting at least two volume scans worth of data as in step 18 above. If the data appears stable, proceed to the next step. If not, collect more data until stability is achieved.

**WARNING**

It is imperative that steps 10 and 11 are performed to disconnect the communications lines **BEFORE** disconnecting cable W104 from 4J16 to prevent the “bullseye” pattern from possibly being

broadcast to and interfere with the national mosaics for FAA air traffic control operations and NWS weather display operations. For this procedure, disregard the yellow tag hanging from cable W104 once steps 10 and 11 are completed.

21. At the inside top of the Receiver Cabinet UD4, loosen cable W104 at 4J16 so that it is finger–tight, but do not disconnect W104 yet.

21a. At the Applications Screen, observe the elevation angle display. When the reading is between 2.5 degrees and the first cut of 19.6 degrees, obtain the antenna peak power reading as follows:

At the command and parameter lines, enter **DIPD<Space>XMT<Return>** and record the Antenna Peak Power.

Ant Peak Power = _____ kW

21b. When the volume scan is completed, as seen as a decrease in elevation angle from 19.6 degrees down to 0.5 degrees and the start of the change in azimuth angle, disconnect W104 from 4J16 and connect the signal generator through the Type–N test cable to 4J16. The test cable should be connected to 4J16 before the completion of the first elevation cut, so do not delay connecting the test cable.

**NOTE**

This injects the nominal –40 dBm CW signal in place of the normal test signals. The result on the Reflectivity product is concentric rings of different reflectivity (i.e., a “bullseye” pattern) with a wedge of missing data. The wedge represents the time from the start of the cut until the test cable connection was made.

22. When the elevation angle indicates that the 1.5 degree cut is in progress, enter **STBY<Return>** on the RDA Applications Terminal, to command the RDA to standby state.

23. Disconnect the test cable from 4J16 and reconnect W104 to 4J16.

24. Access the System Console throught the following means. NWS/DoD sites: use the mouse or press the <**Alt**> and <**Tab**> keys. FAA sites: press the <**Shift**> and <**Port**> keys simultaneously.

25. At the System Console, enter **D T<Return>**. Note the time that the CW signal is connected to identify pertinent reflectivity product volume scan time.

Time _____

26. Return to the RDA Applications Terminal by using the mouse/<**Alt**><**Tab**> keys or <**Shift**> and <**Port**> keys.

27. Close all receiver cabinet doors. This will alleviate any possible interference between the signal generator and interior cabinet components during injection of the next test signal.

28. Connect the HP8481A Power Sensor to the power meter and calibrate the combination. After calibration is completed, ensure the power meter dBm MODE button is pressed in and connect the combination to the end of the test cable using a Type–N female–to–female adapter and adjust the signal generator output dial for 0 ±0.2 dBm as read on the meter. Record below as $P_{in}$@4J17. Remove the test cable and adapter from the power sensor. Remove the adapter from the test cable.

    $P_{in}$@4J17 = _____ dBm

29. In the following step, a cable will be disconnected which will disrupt the calibration process. If the cable is disconnected while the system is performing a calibration (approximately once per minute in Standby), a corruption of the calibration process could occur which may cause incorrect values to be displayed when the test cable is connected. Therefore, the system cable should be disconnected and the test cable connected between the actual calibration periods. To note when the actual calibration occurs, open the right front RDADP door and note the green lights on the bottom of the PSPI card in slot 14 of the RDASC. The calibration period occurs when the bottom green light(s) flicker.

30. Disconnect cable W60 from 4J17 on the outside top of the receiver cabinet. Connect the test cable to 4J17 being careful not to put a sharp bend at the cable connector near 4J17.

31. Within two minutes, the RDA alarms LIN CHAN TEST SIGNALS DEGRADED and LOG CHAN TEST SIGNALS DEGRADED shall appear on the RDA Applications Terminal. At this time, enter **DIPD<Space>CAL<Return>**. Record RFD2 LIN TGT MEASURED AMP below.

    RFD2 LIN TGT MEASURED AMP _____
    (First Reading)

32. Wait at least two minutes. Again, enter **DIPD<Space>CAL<Return>** and record RFD2 LIN TGT MEASURED AMP.

    RFD2 LIN TGT MEASURED AMP _____
    (Second Reading)

**NOTE**

For **DOD and FAA systems** (where the RDA and RPG are collocated) use the RPG Maintenance Position Terminal (located inside the RPGPCA cabinet) to complete steps 33 through 41 to obtain the range of the 35–40 dBZ transition. For **NWS systems**, where there is no local RPG Maintenance Position Terminal, follow steps 42 through 51 using the MSCF HCI Clutter Regions Screen to obtain the range of the 35–40 dBZ transition.

**For DOD and FAA systems:**

33. At the RPG Maintenance Position Terminal (located inside the RPGPCA cabinet), in the Applications area on the right hand side of the "RPG Control/Status" window (HCI Main Window), click on the **Clutter Regions** button to open the "Clutter Regions" window.

34. In the area just below the displayed reflectivity product, ensure the following radio buttons are highlighted (white):

    Segment: **Low**
    Background: **Reflectivity**
    Mode: **Zoom**
    Units: **NM**

35. Using the mouse, place the cursor over the 35–40 dBZ (note the product display data levels just to the right of the displayed reflectivity product) transition line (normally bright yellow to brownish–yellow transition) and click the left button. This recenters and zooms the image over the point selected by the cursor.

36. Again, place the cursor over the 35–40 dBZ transition line and click the left button. This recenters and zooms the image over the point selected by the cursor.

37. In the area just below the displayed reflectivity product, position the cursor over the Mode: **Sector** radio button and click the left button. The Mode: **Sector** button is now highlighted (white).

38. Position the point of the cursor arrow on the color transition line which corresponds to the change from 35 to 40 dBZ.

**NOTE**

Due to the non–perfect signal processing throughout the entire 360 degree sweep and possible effects of the clutter filter map, the 40 dBZ transition point will not necessarily be a smooth circle. However, it should be easy to recognize the predominant transition range. Jiggle the cursor slightly in and out from the transition point. If the range steps one NM right near the transition point, the actual transition range should be rounded to the higher value.

39. Under A/R on the upper left portion of the reflectivity product display, read the range in NM corresponding to 40 dBZ and enter below.

| Elevation Cut | dBZ | Range(NM) |
|---|---|---|
| 0.5 degrees | 40 | _____ |

**NOTE**

If you desire assistance, call the WSR–88D Hotline and provide the time recorded in step 25. The Hotline will use this time to

dial–in (Dial–in Line 1) to access the specific reflectivity product produced using the ingested test signal.

40. Click on the **Close** button in the upper left hand corner of the Clutter Regions window to close the window.

41. Skip to step 67 to complete the CW sub procedure.

**For NWS systems:**

42. Contact the WSFO and ask them to complete steps 43 through 49 to determine the 35 to 40 dBZ transition range.

43. At the MSCF, in the Applications area on the right hand side of the RPG Control/Status window (HCI Main Window), click on the **Clutter Regions** button to open the Clutter Regions window.

44. In the area just below the displayed reflectivity product, ensure the following radio buttons are highlighted (white):

    Segment: **Low**
    Background: **Reflectivity**
    Mode: **Zoom**
    Units: **NM**

45. Using the mouse, place the cursor over the 35–40 dBZ (note the product display data levels just to the right of the displayed reflectivity product) transition line (normally bright yellow to brownish–yellow transition) and click the left button. This recenters and zooms the image over the point selected by the cursor.

46. Again, place the cursor over the 35–40 dBZ transition line and click the left button. This recenters and zooms the image over the point selected by the cursor.

47. In the area just below the displayed reflectivity product, position the cursor over the Mode: **Sector** radio button and click the left button. The Mode: **Sector** button is now highlighted (white).

48. Position the point of the cursor arrow on the color transition line which corresponds to the change from 35 to 40 dBZ.

**NOTE**

Due to the non–perfect signal processing throughout the entire 360 degree sweep and possible effects of the clutter filter map, the 40 dBZ transition point will not necessarily be a smooth circle. However, it should be easy to recognize the predominant transition range. Jiggle the cursor slightly in and out from the transition point. If the range steps one NM right near the transition point, the actual transition range should be rounded to the higher value.

49. Under A/R on the upper left portion of the reflectivity product display, read the range in NM corresponding to 40 dBZ and enter below.

| Elevation Cut | dBZ | Range(NM) |
|---|---|---|
| 0.5 degrees | 40 | _____ |

50. Click on the **Close** button in the upper left hand corner of the Clutter Regions window to close the window.

51. Skip to step 67 to complete the CW sub procedure.

52. Steps 52 through 66 are deleted.

67. This completes the data gathering phase of the procedure. Disconnect the test cable from 4J17. Reconnect cable W60 to 4J17.

68. At the RDA Applications Terminal, terminate the applications software by entering **TERP<Tab>*password* <Return>**.

69. Press the **<Shift>** and **<Port>** keys **simultaneously** to switch to the RDA System Console.

70. At the RDA System Console, after the tasks cancel, bring up the RDASOT program by entering the following:

| Step | Operator Action | System Response/Comments |
|---|---|---|
| a. | **RDASOT<Return>** | RDASOT Main Menu (Mode Selection Menu for Redundant sites) is displayed. |
| b. | **1<Return>**<br>Redundant sites only | To select FULL mode for this procedure at Redundant sites. |
| c. | **3<Return>** | To select Calibration Menu; the Calibration Menu is displayed. |
| d. | **4<Return>** | To select RCVR/SP Calibration Routines; the RSP Calibration Selection Menu will be displayed. |
| e. | **6<Return>** | To select CW Sub Reflect Accuracy Ver. |

71. At the prompts, enter the data recorded in previous steps. You will first be prompted to indicate if you have the range data of the 35–40 dBZ transition determined via the MSCF or RPG Maintenance Position Terminal or AWIPS display. Ensure that you enter a minus sign for negative numbers.

    Enter data as follows:

| PARAMETER | ENTER AS: |
|---|---|
| POWER AT END OF CABLE, $P_{in}$ (step 15) | XX.XX (dBm) |
| ANT PK PWR IN kW (step 21a) | XXX (kW) |
| POWER IN AT 4J17 (step 28) | XX.XX (dB) |
| FIRST RFD2 LIN TGT MEASURED AMP VALUE (step 31) | XX.X (dBZ) |
| SECOND RFD2 LIN TGT MEASURED AMP VALUE (step 32) | XX.X (dBZ) |
| RANGE FROM PUP* IN NM (step 39 or 49) | XX (NM) |

***NOTE**

This entry refers to the 35–40 dBZ transition range (in NM) as determined at the MSCF or RPG Maintenance Position Terminal.

**NOTE**

The RANGE FROM PUP IN NM prompt will not appear if you answered No to the first prompt.

72. Assuming all data was just entered, the RDASOT routine will display the RDA REFLECTIVITY ERROR and the PUP REFLECTIVITY ERROR. Record the RDA REFLECTIVITY ERROR and the PUP REFLECTIVITY ERROR values below and calculate the difference:

    RDA REFLECTIVITY ERROR _____

    PUP REFLECTIVITY ERROR _____

    DIFFERENCE _____

73. If the RDA REFLECTIVITY ERROR and the PUP REFLECTIVITY ERROR differ by more than 0.8 dB, perform the RF Test Attenuator Calibration paragraph 6–6.28.3.4, then repeat this procedure from the beginning.

74. The RDA Reflectivity Error should be less than ±1 dB before leaving the RDA shelter. If the error is less than ±1 dB, enter as the RDA Data Final value in Table 6–31. If the error is greater than ±1 dB, it will be necessary to recheck the procedure and troubleshoot per Figure 6–83, sheets 3 and 4 to obtain an error less than ±1 dB. When the problem is resolved and an error less than ±1 dB is obtained, enter as RDA Data Final in Table 6–31.

75. The PUP Reflectivity Error shall also be less than ±1 dB. If this is true, enter as the PUP Data Final value in Table 6–31. If the PUP Reflectivity Error exceeds ±1 dB while the RDA error is less than ±1 dB, it will be necessary to recheck the procedure and troubleshoot to obtain a PUP Reflectivity Error of less than ±1 dB.

76. At the RDA System Console, enter **Ø<Return>** until RDASOT terminates.

77. At the RDA System Console, enter **RDAUP<Return>**.

78. Return to the RDA Applications Terminal by using the mouse/<**Alt**><**Tab**> keys or press the **<Shift>** and **<Port>** keys **simultaneously**. At the Applications Terminal, check that all calibration alarms are absent.

**NOTE**

The following steps will clear out the RPG Product Database to prevent the possible distribution of the CW Substitution “bullseye” pattern still held in the database before restoring the radar to normal operations.

78a. At the MSCF or RPG Terminal (located in the RPGPCA cabinet) perform the following steps:

a. At the RPG Control/Status window, in the RPG container, click on the **Control** button. The RPG Control window appears.

b. In the RPG Control window, select **Off** in the Shutdown column. In the warning_popup window, click on **Yes** to confirm that all RPG processes will be stopped. Note the State reflects SHUTDOWN after approximately 15 seconds.

c. In the RPG Control window, click on **Options** in the Restart column. The RPG Init Options window appears.

d. In the RPG Init Options window, click on the **padlock** button in the upper right corner to open the Password window.

e. In the LOCA area of the Password window, click on the **URC** button.

f. In the Password window, click in the light blue Password box to make it active and then enter the correct **URC PASSWORD <CR>.** The RPG Init Options window now becomes active.

g. In the RPG Init Options window, select **Product Database** by clicking on the box to the left. Then click on the **Activate** button. In the warning_popup window, click on **Yes** to confirm that you are about to initialize all data selected in the Initialization Options list. Then click on the **Close** button to close the window.

h. In the RPG Control window, click on **All Tasks** in the Restart column. In the warning_popup window, click on **Yes** to confirm you are about to restart all of the RPG products. The process will take approximately 45 seconds. The process will be completed when the connectivity lines between the RPG and USERS containers on the RPG Control/Status window shows ”green”. The RVW lines between the RDA and RPG will be inactive (white) because the RDA is in STBY.

i. Click on the **Close** button to close the RPG Control window.

79. At the RDA Applications Terminal, enter **OPER<Return>** at the command line.

80. Wait at least one volume scan to complete, then enter **ENRC<Return>** at the command line. This is the first step to relinquish control to the RPG.

81. Return to the MSCF or RPG Maintenance Position Terminal (located inside the RPGPCA cabinet), and select RPG control by executing the following steps:

    a. In the RPG Control/Status window (HCI Main Window), click on the **Control** button in the "RDA" container to open the RDA Control/Status window.

    b. In the RDA Control area of the RDA Control/Status window, verify the Control: box indicates **Remote (RPG)** to complete the process of transferring control of the RDA to the RPG.

    c. Click on the **Close** button in the upper left hand corner of the RDA Control/Status window to close the window.

82. At the MSCF or RPG Maintenance Position Terminal (located inside the RPGPCA cabinet), in the Applications area on the right hand side of the "RPG Control/Status" window (HCI Main Window), click on the **Clutter Regions** button to open the Clutter Regions window.

83. Steps 83 through 85 deleted.

86. Near the top left corner of the Clutter Regions window, click on the **File** button to open the Clutter Region Files window.

87. In the "Clutter Region Files" window, double click anywhere on the name of the clutter file recorded in step 5 to select the clutter regions file that was active when this procedure was started. Once the correct file name is properly selected, the Title Bar of the "Clutter Regions" window changes and displays that file name and its contents. Then click on the **Close** button to close the "Clutter Region Files" window.

88. In the "Clutter Regions" window, click on the **Download** button and then click the **Yes** selection in the subsequent warning_popup window. This will send the clutter region file from step 5 to the RDA, which will take effect at the beginning of the next VCP.

89. Click on the **Close** button in the upper left hand corner of the Clutter Regions window to close the window.

90. To reestablish the narrowband communication, reenable all the comms lines. In the "RPG Control/Status" window (HCI Main Window), click on the **Comms** button in the USERS container to open the Product Distribution Comms Status window.

91. Enable **ALL** comms lines. Execute the following to accomplish this:

    a. Under the Product Distribution Lines area, ensure the **Sorted By Line** option is highlighted.

    b. In the Product Distribution Lines area, position the cursor on Line 1, press and hold down the left mouse button while dragging the cursor down the page. This action will highlight all the line entries on the displayed page.

c. In the Line Control area, select the **Connect** command button and then click the **Yes** selection in the subsequent "warning_popup" window. This action will disable the highlighted (selected) comms lines.

d. Under the Product Distribution Lines area, click the **Next** option to display page 2 of the Product Distribution Lines menu.

e. In the Product Distribution Lines area, position the cursor on the first line definition, press and hold down the left mouse button while dragging the cursor down the page. This action will highlight all the line entries on the displayed page.

f. In the Line Control area, select the **Connect** command button and then click the **Yes** selection in the subsequent warning_popup window. This action will enable the highlighted (selected) comms lines.

g. Click on the **Close** button in the upper left hand corner of the Product Distribution Comms Status window to close the window.

92. This portion of the procedure is complete.

6–6.28.3 Off–Line Calibration Procedures. The procedures in this section must be performed when (1) the on–line performance data indicate a maintenance action is required (i.e., from Figure 6–83 sheet 2), (2) the off–line calibration checks (sheets 3 through 5) indicate a need for corrective action, (3) or certain components critical to the reflectivity accuracy of the system are replaced. The specific calibration procedures contained in this section follow:

**NOTE**

Off–line procedures require cessation of normal activities. A message should be sent to all users to warn them of this.

- Calibration of CW Test Path Losses. (6–6.28.3.1)
- RF Drive Path Calibration. (6–6.28.3.2)
- Calibration of Internal Noise Source. (6–6.28.3.3)
- Calibration of Test Attenuator. (6–6.28.3.4)
- Delayed Klystron Path Calibration. (6–6.28.3.5)

**NOTE**

In the following procedure it is critical to observe and record the positive or negative sign of the result. If signs are reversed, errors will result.

6–6.28.3.1 CW Test Path Calibration.

6–6.28.3.1.1 Equipment and Tools Required.

1. Power Meter HP436A
2. Power Sensor HP8481A
3. Adapter, Type–N, female–to–SMA female
4. Adapter, 90°, Type–N (if available)
5. Attenuator, Type–N, 10 dB
6. Adapter, 90°, SMA
7. Adapter, Type–N, female–to–female, (Qty 2)
8. Mode Adapter, Waveguide to Type–N (female), HPS281A or equivalent
9. Test Cable, Type–N, 4 feet or longer
10. Pliers
11. Screwdriver, Phillips
12. Hex Key Set
13. Scientific Calculator
14. Torque Wrench, SMA

6–6.28.3.1.2 Procedure.

1. Before terminating the applications software at the RDA, obtain the Adaptation Data indicated in Table 6–26 by using the procedure in paragraph 6–6.28.1.3.3, steps 1 through 2.NO TAG.
2. Terminate the applications software by entering **TERP<Tab>*password*<Return>** on the command and parameter lines.
3. Press the **<Shift>** and **<Port>** keys **simultaneously** for the System Console.
4. Calibrate the power meter and HP8481A power sensor in accordance with paragraph 6–6.22.
5. Remove cable 4W100 from 4J15 at the inside top of the Receiver Cabinet UD4.
6. Connect the HP8481A power sensor to 4J15.
7. At the RDA System Console, bring up the RDASOT program by entering the following:

| Step | Operator Action | System Response/Comments |
|---|---|---|
| a. | **RDASOT<Return>** | RDASOT Main Menu (Mode Selection Menu for Redundant sites) is displayed. |
| b. | **1<Return>**<br>Redundant sites only | To select FULL mode for this procedure at Redundant sites |

| Step | Operator Action | System Response/Comments |
|---|---|---|
| c. | **3<Return>** | To select Calibration Menu. |
| d. | **4<Return>** | To select RCVR/SP Calibration Routines; the RSP Calibration Selection Menu will be displayed. |
| e. | **4<Return>** | To select Test Path Calibration; the CW Test Path Calibration Control Menu is displayed. |
| f. | **1<Return>** | To select Inject Signal with 8 dB Test Attenuation (default). |

8. Measure and record the average power at 4J15.

   $P_{@4J15}$ = _____ dBm

9. Disconnect the power sensor from 4J15.

10. Reconnect 4W100 to 4J15.

**WARNING**

Do not attempt to climb or service the pedestal assembly while the antenna is rotating and/or while servos are operating. Failure to perform applicable shutdown steps in paragraph 6–6.15.3 could cause serious injury or death from antenna radiation or antenna movement.

11. Perform steps 3a through 3e and 5 of paragraph 6–6.15.3 to secure transmitter(s) and remove power to pedestal electronics and pedestal motors.

12. Proceed to radome with the following equipment and tools:

    a. Power Meter HP436A

    b. Power Sensor HP8481A

    c. Screwdriver, Phillips

    d. Adapter, Type–N, female–to–female, (Qty 2)

    e. Pliers

    f. Adapter, Type–N, 90°(if available)

    g. Mode Adapter, Waveguide to Type–N (female)

    h. Test Cable, Type–N

i. Hex Key Set

j. Scientific Calculator

**WARNING**

Failure to secure and stow antenna could result in serious injury or death from antenna movement.

13. Perform step 6 of paragraph 6-6.15.3 to secure and stow antenna.

**NOTE**

You will be entering a confined space, non-permit required. This means the confined space does not contain any atmospheric hazards capable of causing death or serious physical harm.

14. Open the lower pedestal riser door or remove lower access cover.

**NOTE**

The following procedure is written referencing single channel and Redundant site Channel 2 systems. Redundant site Channel 1 systems should remember to substitute Receiver Protector 2A7 for 2A3, LNA 2A8 for 2A4, cable 2W14 for 2W5, cable 2W15 for 2W6, Bandpass Filter 2A1A3FL2 for 2A1A3FL1, and coax cable 2W901 for 2W900.

15. Locate the Receiver Protector UD2A3 and the Low Noise Amplifier Assembly UD2A4.

16. Remove cable 2W6 connected to the output of the low noise amplifier.

17. Connect the HP8481A power sensor to the power meter and calibrate the power sensor using paragraph 6-6.22 .

18. Connect the power sensor to the output of the Low Noise Amplifier 2A4J2 using the Type-N 90° adapter (if available).

19. Measure the power at this point (2A4J2).

$P_{@2A4J2(measured)}$ = _____ dBm

20. Calculate the R77 path loss as follows:

$R77_{(measured)}$ = $P_{@4J15}$ (step 8) - $P_{@2A4J2}$ (step 19)

= _____ - _____

= _____ dBm

**NOTE**

Enter the final value of R77 in Table 6-26. The new value of R77 in Adaptation Data must be updated at the conclusion of the calibration process using the procedures in paragraph 6-6.29 .

21. Disconnect the power sensor from the low noise amplifier. Remove the low noise amplifier and set aside.

22. Connect the power sensor to the output of the Bandpass Filter 2A1A3FL1/2 Out using the Type-N female-to-female adapter and Type-N 90° adapter (if available).

23. Record the power at this point (2A1A3FL1/2 Out).

$P_{@2A1A3FL1/2\ Out(measured)}$ = _____ dBm

24. Calculate the R74 path loss as follows:

$R74_{(measured)}$ = $P_{@2A4J2}$ (step 19) - $P_{@2A1A3FL1/2\ Out}$ (step 23)

= _____ - _____

= _____ dBm

**NOTE**

Enter as the final value of R74 in Table 6-26. The value of R74 in Adaptation Data must be updated at the conclusion of the calibration process using the procedures in paragraph 6-6.29 .

25. Remove cable 2W5 connected to the input of the Receiver Protector 2A3J3.

26. Connect the power sensor to the end of the removed cable using the Type-N female-to-female adapter.

27. Measure the power at this point (2W5).

$P_{@2W5(measured)}$ = _____ dBm

28. Calculate the R72 + (R73 + R247 + R248) path loss as follows:

$[R72 + (R73+R247+R248)]_{(measured)}$ = $P_{@2A1A3FL1/2\ Out}$ (step 23) - $P_{@2W5\ (measured)}$ (step 27)

= _____ - _____

= _____ dBm

**NOTE**

A new value of R72 in Adaptation Data must be updated at the conclusion of the calibration process using the procedures in paragraph 6-6.29 .

$R72_{New}$ = $[R72 + (R73+R247+R248)]_{(measured)}$ - R73.

= _____ - _____

= _____ dB

**NOTE**

If $R72_{New}$ is outside the range of -19.7 to -20.3, it will be necessary to measure $R73_{New}$ and recalculate $R72_{New}$ using the procedure in steps 29 through 36. Proceed to step 29. If $R72_{New,}$ as calculated in this step, is within the prescribed range, enter the value as the final value of R72 in Table 6-26 and proceed to step 37.

29. Communicate with the technician in the equipment shelter and perform the following steps at the RDA System Console:

| Step | Operator Action | System Response/Comments |
|---|---|---|
| a. | **Ø<Return>** | Until RDASOT Main Menu is displayed. |
| b. | **4<Return>** | To select Manual Control and Display Menu. |
| c. | **2<Return>** | To select Control RCVR/Signal Proc; the TESTSIG Source Selection Menu will be displayed. |
| d. | **5<Return>** | To select CW Source; CW Source Control Menu is displayed. |
| e. | **2<Return>** if RCVR Injection Point is **not** Front End | To toggle RCVR Injection Point to **Front End**; CW Source Control Menu is again displayed. |
| f. | **4<Return>** | To select Test Attenuation. `Enter the new RF Test Attenuation Value (0...103 dB)` is displayed. |
| g. | **20<Return>** | To select 20 dB attenuation; CW Source Control Menu is again displayed. |
| h. | **1<Return>** | To select Inject Signal. |

30. In the radome, disconnect 2W5P1 from 2A3J3. Disconnect the waveguide from 2A3J1 and connect the mode adapter to 2A3J1. Place the dust cover which comes with the mode adapter over the exposed open waveguide to prevent accidentally dropping anything down the waveguide.

31. Connect the Type-N female-to-female adapter to 2W5P1, the cable which was previously connected to 2A3J3. Connect the short piece of Type-N cable to the adapter.

32. Calibrate the power meter and the HP8481A power sensor. Connect the power sensor to the end of the short piece of cable using the second Type-N female-to-female adapter and record the power as follows:

    $P_{in@2A3J1}$ = _____ dBm

33. Disconnect the power sensor and female-to-female adapter from the short cable and connect the cable to the mode adapter which is connected to 2A3J1.

34. Connect the power sensor and Type-N female-to-female adapter to the output of the Bandpass Filter 2A1A3FL1/2 Out. Measure and record the power as follows:

    $P_{out@2A1A3FL1/2\ Out}$ = _____ dBm

35. Calculate the new value for (R73+R247+R248) as follows:

    $R73+R247+R248_{New}$ = $P_{out@2A1A3FL1/2\ Out}$ (step 34) - $P_{in@2A3J1}$ (step 32)

    = _____ - _____

    = _____ dB

    This value shall be between 0 and -1.5 dB. If this is not the case, the Passive Limiter 2A3A1, the Receiver Protector 2A3, or the Bandpass Filter 2A1A3FL1/2 may be defective. The Passive Limiter can be quickly checked by performing paragraph 6-5.52.19.2, step 1. If the value of R73+R247+R248 is OK, calculate the final value of R73 as follows:

    $R73_{Final}$ = $(R73+R247+R248)_{New}$ - (R247+R248)

    = _____ - _____

    = _____ dB

    Record as $R73_{Final}$ in Table 6-26.

36. The $R72_{New}$ value calculated in step 28 must now be corrected. Calculate the revised value for $R72_{New}$ as follows:

    $R72_{New}$ = [R72 + (R73+R247+R248)] (step 28) - $(R73+R247+R248)_{New}$ (step 35)

    = _____ - _____

    = _____ dB

    Record as $R72_{Final}$ value in Table 6-26. Communicate with the technician in the equipment shelter and perform the following steps at the RDA System Console:

| Step | Operator Action | System Response/Comments |
|---|---|---|
| a. | **Ø<Return>** | Until RDASOT Main Menu is displayed. |
| b. | **3<Return>** | To select Calibration Menu. |

| Step | Operator Action | System Response/Comments |
|---|---|---|
| c. | **4<Return>** | To select RCVR/SP Calibration Routines; the RSP Calibration Selection Menu will be displayed. |
| d. | **4<Return>** | To select Test Path Calibration; the CW Test Path Calibration Control Menu will be displayed. |
| e. | **1<Return>** | To select Inject Signal with 8 dB Test Attenuation (default). |

37. Replace all removed components and cables restoring everything in the radome to normal. Refer to paragraph 6-6.16.3, steps 1 through 6 to unstow antenna and ready pedestal for operation.

38. Return to the equipment shelter. Restore pedestal drive power by performing the following steps:

    a. At the appropriate Secondary PDP, set Pedestal Motor Power circuit breakers CB2, 4, and 6 to **ON**.

       Single-channel Systems - Secondary PDP UD7A3

       FAA Redundant Systems - Secondary PDP#2 UD7A29

       NWS Redundant Systems - Secondary PDP#3 UD7A3

    b. At the RDA Maintenance Panel UD5A2, set the Pedestal Electronics Power switch to **ON**.

39. Disconnect cable 4W104 from 4J16.

40. Connect the HP8481A power sensor to the power meter and calibrate the power sensor using paragraph 6-6.22. Using a Type-N female-to-female adapter, measure the power at the end of cable 4W104.

    $P_{@4W104}$ = _____ dBm

41. Disconnect power sensor and adapter from 4W104 and reconnect 4W104 to 4J16. Replace the adapter on the power sensor with a calibrated 10 dB attenuator.

**NOTE**

The exact attenuation of the 10 dB attenuator must be used in power calculations. The exact value of attenuation can be obtained from manufacturer's calibration data sheet (for site frequency) or by analyzing relative power measurements of a signal generator output (at site frequency) both with the attenuator attached and not attached.

42. Enter the exact attenuation of the 10 dB attenuator as a positive value.

    $P_{10dB\ attenuator}$ = +_____ dB

**WARNING**

Hazardous voltages are present within the receiver cabinet. Take all standard precautions against electric shock. Failure to comply could cause serious injury or death.

43. At the Secondary Power Distribution Panel, set the Receiver circuit breaker CB22 to **OFF**. **Redundant sites**, use the corresponding Secondary PDP for the channel being calibrated.

44. Disconnect cable 4W112P2 normally connected to 4A23J1. The cable normally connected to 4A23J5 must be temporarily disconnected to gain access to 4W112P2.

45. Connect the power sensor and calibrated 10 dB attenuator to 4W112P2 through a Type-N female-to-SMA female adapter.

**NOTE**

Be careful to support the power sensor so as to avoid undue stress on the semi-rigid cable.

46. At the Secondary Power Distribution Panel, set Receiver circuit breaker CB22 to **ON**.

47. At the RDA System Console, enter **4<Return>** to toggle test attenuation to 0 dB.

48. At the RDA System Console, enter **1<Return>** to select Inject Signal.

49. Measure the CW power at 4W112P2 with the attenuator in place.

    $P_{@4W112P2}$ = _____ dBm

50. At the RDA System Console, enter **2<Return>** to select Turn Off Signal Source.

51. Disconnect the power sensor and attenuator from 4W112P2.

**WARNING**

Hazardous voltages are present within the receiver cabinet. Take all standard precautions against electric shock. Failure to comply could cause serious injury or death.

52. At the Secondary Power Distribution Panel, set the Receiver circuit breaker CB22 to **OFF**. **Redundant sites**, use the corresponding Secondary PDP for the channel being calibrated.

53. Reconnect 4W112 to 4A23J1 and tighten to 8 in-lbs. Reconnect cable at 4A23J5.

54. At the Secondary Power Distribution Panel, set Receiver circuit breaker CB22 to **ON**.

55. If a new value of R73 was calculated in step 35, proceed to the next step. If not, proceed to step 59.

56. At the RDA System Console, enter **Ø<Return>** until RDASOT terminates.

57. Bring up the RDA operational software by entering **RDAUP<Return>**.

58. Enter the final value for $R73_{New}$ from step 35 into receiver adaptation. Use the Inspect/Change RDA Adaptation (ICRA) procedures of paragraph 6-6.29 , except **do not** bring the operation software back up (RDAUP) after terminating the operational software with the **TERP<Tab>*password*<Return>** command.

59. At the RDA System Console, bring up the RDASOT program to enter Test Path Calibration data by entering the following:

| Step | Operator Action | System Response/Comments |
|---|---|---|
| a. | **RDASOT<Return>** | RDASOT Main Menu (Mode Selection Menu for Redundant sites) is displayed. |
| b. | **1<Return>**<br>Redundant sites only | To select FULL mode for this procedure at Redundant sites. |
| c. | **3<Return>** | To select Calibration Menu. |
| d. | **4<Return>** | To select RCVR/SP Calibration Routines; the RSP Calibration Selection Menu will appear. |
| e. | **4<Return>** | To select Test Path Calibration; CW Test Path Calibration Control Menu will be displayed. |
| f. | **3<Return>** | To select Input Measured Values/Display Results. |

60. At the RDA System Console, enter the measurements recorded in previous steps when prompted. Make sure to enter minus signs for negative numbers. Enter data as follows:

| PARAMETER | ENTER FROM STEP #: |
|---|---|
| AVG POWER AT 4J15 IN dBm | 8 |
| AVG POWER AT 2A4J2 IN dB | 19 |
| POWER AT 2A1A3FL1/2 Out IN dB | 23 |

| | |
|---|---|
| POWER AT 2W5 IN dB | 27 |
| POWER AT 4W104 | 40 |
| EXACT ATTENUATION OF 10 dB ATTENUATOR | 42 (enter as positive value) |
| POWER AT 4W112P2 IN dBm | 49 |

The RDASOT routine will display the NEW CW TEST PATH DATA SUMMARY table containing final values for R34, R63, R69, R72, R74, and R77.

61. Record the new path losses as final values in Table 6-26.

62. At the RDA System Console, enter **Ø<Return>** until RDASOT terminates.

63. Enter **RDAUP<Return>** at the System Console to return to normal operation.

64. Enter all the new path losses in Current Adaptation Data in accordance with paragraph 6-6.29 .

**NOTE**

If there is not sufficient range in R63, apply the difference as a correction to R66.

6-6.28.3.2 RF Drive Path Calibration.

6-6.28.3.2.1 Equipment and Tools Required.

1. Scientific Calculator
2. Oscilloscope, Digital
3. Crystal Detector, HP423B
4. Power Meter HP436A
5. Power Sensor HP8481A
6. Adapter, N-type, female-to-female
7. SMA cable, 6 ft
8. BNC cable, RG58
9. N-type cable, 6 ft
10. Torque Wrench, SMA
11. Attenuator, variable 0-11 dB, HP8494A
12. Attenuator, 20 dB
13. Adapter, Type-N, female-to-SMA female

6-6.28.3.2.2 Procedure.

**NOTE**

If the operational software is up, cancel it by entering:
**TERP<Space>*password*<Return>**.

To bring up the RDASOT software, from the System Console, enter:
**RDASOT<Return>**.

If the system is redundant, to select FULL MODE, enter:
**1<Return>**.

1. Measure the 4 dB RF Drive pulse widths as described in NWS EHB 6-511 (Transmitter Maintenance Manual) paragraph 7.8.6.4.2 steps 1 through 29 but do not adjust 3AT1 (step 17) or the pulse width (step 21). Record these values as TR7, RF Drive pulse width in short pulse and TR8, RF Drive pulse width in long pulse below.

   TR7 (SP) = _____ TR8 (LP) = _____

2. Measure RF Drive Test Signal LP (R36) and RF Drive Test Signal SP (R37) as described in NWS EHB 6-511 paragraph 7.8.6.6, steps 10 through 21. Record below and as final values of R36 and R37 in Table 6-26.

   R36 = _____ R37 = _____

3. Connect the HP8481A power sensor to the power meter and calibrate according to the procedures in paragraph 6-6.22 .

**WARNING**

Hazardous voltages are present within the receiver cabinet. Take all standard precautions against electric shock. Failure to comply could cause serious injury or death.

4. At the Secondary Power Distribution Panel, set the Receiver circuit breaker CB22 to **OFF**. **Redundant sites**, use the corresponding Secondary PDP for the channel being calibrated.

**NOTES**

The multi-pin cable connected to 4A23J5 must be temporarily disconnected to gain access to 4A23J1.

It will be necessary to temporarily loosen the end of cable 4W112 at 4A22J5 to remove cable 4W112 connected to 4A23J1. Use caution when loosening or tightening these SMA connectors because connectors may strip.

5. Disconnect cable 4W112P2 normally connected to 4A23J1. The cable normally connected to 4A23J5 must be temporarily disconnected to gain access to 4W112P2.

**NOTE**

Be careful to support the power sensor so as to avoid undue stress on the semi-rigid cable.

6. Connect the power sensor to cable 4W112P2.
7. At the Secondary Power Distribution Panel, set the Receiver circuit breaker CB22 to **ON**.
8. At the Applications Terminal, terminate the operational software by entering **TERP<Tab>*password*<Return>** on the command and parameter lines.
9. Press **<Shift>** and **<Port>** keys **simultaneously** to access the System Console.
10. At the RDA System Console, bring up the RDASOT program by entering the following:

| Step | Operator Action | System Response/Comments |
|---|---|---|
| a. | **RDASOT<Return>** | RDASOT Main Menu (Mode Selection Menu for Redundant sites) is displayed. |
| b. | **1<Return>**<br>Redundant sites only | To select FULL mode for this procedure at Redundant sites. |
| c. | **4<Return>** | To select Manual Control and Display Menu. |
| d. | **2<Return>** | To select Control RCVR/Signal Proc; the TESTSIG Source Selection Menu will appear. |
| e. | **3<Return>** | To select Klystron Drive Source; the Klystron Drive Source Control Menu will be displayed. |
| f. | **1<Return>** | To select Inject Signal. |

11. Measure the average power at 4W112P2.

$P_{avg}$ RFDrive SP,PRF5$_{@4W112P2}$ = _____ dBm

12. Calculate the duty cycle (DC) expressed in dB in short pulse as follows:

DC(dB) SP = 10 log [ 1013.5 Hz $\times$ TR7 $\times 10^{-9}$ (nanoseconds)

= 10 log [ 1013.5 $\times$ _____ $\times 10^{-9}$]

= 10 log _____

= +_____dB

Enter DC(dB) SP as a positive value.

**NOTE**

The PRF value of 1013.5 is the default PRF set C(3) value for PRF5. If another PRF set is being used, use the appropriate PRF displayed for PRF5 on the PRF selection menu.

13. Calculate the measured peak value of $P_{avg}$ RFDrive SP,$PRF5_{@4W112P2}$ as follows:

$P_{peak}$ RFDrive $SP_{@4W112P2\ meas}$ = $P_{avg}$ RFDrive SP,$PRF5_{@4W112P2}$ + DC(dB) SP

= _____ + _____

= _____ dBm

14. Calculate the expected peak value of $P_{peak}$ RFDrive $SP_{@4W112P2}$ as follows:

$P_{peak}$ RFDrive $SP_{@4W112P2\ expected}$ = R37 + R58 + R56

= _____ + _____ + _____

=_____

where R37 is RF DRIVE TEST SIGNAL SHORT PULSE AT 4W112P2, R58 is PL A22J2_5 FOUR POSITION SWITCH, and R56 is the path loss XMTR RF DRIVE TO 4A22J2 in Receiver adaptation data.

15. Calculate the RF Drive test path error in short pulse as follows:

RF Drive test path error SP = $P_{peak}$ RFDrive $SP_{@4W112P2\ meas}$ (Step 13)
- $P_{peak}$ RFDrive $SP_{@4W112P2\ expected}$ (Step 14)

= _____ - _____

= _____

16. Apply the RF Drive test path error SP as a correction to R56 as follows:

$R56_{New}$ = R56 + RF Drive test path error SP

= _____ + _____

= _____ dB

Enter as the final value of R56 in Table 6-26.

17. At the RDA System Console, enter a series of **Ø<Return>** until RDASOT terminates.

18. At the Secondary Power Distribution Panel, set the Receiver circuit breaker CB22 to **OFF**. **Redundant sites**, use the corresponding Secondary PDP for the channel being calibrated.

19. Remove the test equipment from 4W112P2 and reconnect cable 4W112 to 4A23J1 and tighten to 8 in-lbs with SMA torque wrench. Reconnect the cable previously removed from 4A23J5.

20. At the Secondary Power Distribution Panel, set the Receiver circuit breaker CB22 to **ON**.

21. At the RDA System Console, enter **RDAUP<Return>**.

22. Enter the new values for TR7, TR8, R36, R37, and R56 in Adaptation Data per paragraph 6-6.29 . This completes this procedure.

6-6.28.3.3 Calibration of the Noise Path and Noise Source 4A25.

Improper calibration or malfunction of the Noise Source can cause the following RDA alarms:

*SYSTEM NOISE TEMP MAINTENANCE REQUIRED
*SYSTEM NOISE TEMP DEGRADED

In addition to these alarms, an improperly calibrated Noise Source adversely effects Suncheck Subtest 2 results. System noise temp alarms can also be caused by noisy components in the front end of the receiver channel or an out-of-specification path loss for certain front end components, such as the Passive Limiter 2A3A1. Performance of this calibration procedure will remove the Noise Source as a possible cause of these conditions.

6-6.28.3.3.1 Equipment and Tools Required.

1. Power Meter, HP436A
2. Power Sensor, HP8481A
3. RF Signal Generator, HP8464 or equivalent. (Requires 1 hour warm-up time)
4. SMA test cable, 4 to 6 ft long
5. SMA right angle adapter (Qty=2)
6. SMA female-to-SMA female adapter
7. Type-N 10dB calibrated attenuator
8. Type-N female-to-SMA male adapter
9. Type-N female-to-SMA female adapter
10. Type-N male-to-SMA male adapter
11. Type-N female-to-female adapter

12. Type-N male-to-male adapter
13. Type-N right angle adapter
14. 10-inch adjustable wrench
15. Torque wrench, SMA
16. Noise Standard, Micronetics Wireless Model NT-187-1 (Used only for paragraph 6-6.28.3.3.2.4 and requires a 30 minute warm-up time)

6-6.28.3.3.2 Procedure. The path loss of the various adapters and test cable must be calibrated, and the CW path from the frequency generator through the antenna pedestal must be measured. If the CW path loss is out of tolerance, it must be corrected before proceeding. Once the CW path is accurate, then the noise path through the 4-Position Switch 4A22 can be calibrated. These procedures may be accomplished without the use of the NT-187-1 Noise Standard. The NT-187-1 Noise Standard will be used to calibrate the Noise Source 4A25 as a final step in the process.

**NOTE**

Redundant sites must use the controlling channel to perform these procedures.

6-6.28.3.3.2.1 Calibration of Adapters and Test Cable.

1. At the RDA Applications Terminal, obtain the original Adaptation Data listed in Table 6-33 by entering **ICRA<Tab>** ***password*** **<Return>** on the command and parameter lines per paragraph 6-6.29. Record the values in Table 6-33.
2. At the RDA Applications Terminal, obtain the System Noise Temp by entering **DIPD<Tab>REC<Return>** on the command and parameter lines. Record the value in Table 6-33.

Table 6-33. RDA Adaptation Data Required for Noise Source Calibration

| Parameter | Original | Final | Test |
|---|---|---|---|
| A1 | | | |
| A2 | | | |
| R34 | | | |
| R35 | | | |
| R59 | | | |
| R60 | | | |
| R63 | | | |
| R66 | | | |
| R69 | | | |
| R72 | | | |
| R73 | | | |
| R74 | | | |
| R77 | | | |
| R122 | | | |
| R234 | | | |
| R247 | | | |
| R248 | | | |
| System Noise Temp | | | |

3. After all values are entered in Table 6-33, terminate the applications software by entering **STBY<Return>,** followed by **TERP<Tab>** ***password*** **<Return>** on the command and parameter lines.

4. Press the **<Shift>** and **<Port>** keys **simultaneously** to access the RDA System Console.

5. Calibrate the power meter and power sensor in accordance with paragraph 6-6.22 .

6. Remove cable 4W100 from 4J15 at the inside top of the Receiver Cabinet UD4.

7. Connect the HP8481A power sensor and meter combination to 4J15.

8. At the RDA System Console, bring up the RDASOT program by entering the following:

| Step | Operator Action | System Response/Comments |
|---|---|---|
| a. | **RDASOT<Return>** | RDASOT Main Menu (Mode Selection Menu for Redundant sites) is displayed. |
| b. | **1<Return>**<br>Redundant sites only | To select FULL mode for this procedure at Redundant sites. |
| c. | **4<Return>** | To select Manual Control and Display Menu. |
| d. | **2<Return>** | To select Control RCVR/Signal Proc; the TESTSIG Source Selection Menu will be displayed. |
| e. | **5<Return>** | To select CW Source; CW Source Control Menu is displayed. |
| f. | **2<Return>**<br>if RCVR Injection Point is **not** Front End | To toggle RCVR Injection Point to **Front End**; CW Source Control Menu is again displayed. |
| g. | **4<Return>** | To select Test Attenuation. `Enter the new RF Test Attenuation Value (0...103 dB)` is displayed. |
| h. | **8<Return>** | To select 8 dB attenuation; CW Source Control Menu is again displayed. |
| i. | **1<Return>** | To select Inject Signal. |

9. Measure and record the power at 4J15. Allow sufficient time for reading to stabilize.

   $P_{4J15\ meas}$ = _____ dBm

10. Disconnect the power sensor from 4J15 and connect the Type-N right angle adapter to the sensor, then connect the power sensor/adapter combination to 4J15 and measure the reduced power. Calculate the path loss (PL) of the adapter as follows:

    $PL_{\text{Type-N right angle adapter}}$ = $P_{4J15\ meas\ with\ adapter}$ - $P_{4J15\ meas}$ (step 9)
    = _____ - _____
    = _____ dB (Should be a negative number indicating a power loss.) Enter in Table 6-34.

11. Disconnect the power sensor and adapter from 4J15 and remove the adapter from the power sensor.

12. Connect the Type-N male-to-male adapter to the Type-N female-to-female adapter. Connect the male end of the combination to 4J15. Connect the power sensor to the female end of the combination. Measure and record the power as follows:

    $P_{\text{out of Type-N combination}}$ = _____ dBm

13. Calculate the path loss of the combination as follows:

    $PL_{\text{Type-N combination}}$ = $P_{\text{out of Type-N combination}}$ (step 12) - $P_{\text{4J15 meas}}$ (step 9)
    = _____ - _____
    = _____dB (Should be a negative number indicating a power loss.)

14. Calculate the path loss of the Type-N female-to-female adapter as one-half the path loss of the combination as follows:

    $PL_{\text{Type-N female-to-female adapter}}$ = 1/2 $PL_{\text{Type-N combination}}$ (step 13)
    = 1/2 _____
    = _____ dB. Enter in Table 6-34.

15. Disconnect the power sensor and adapters from 4J15.

16. Connect the Type-N male-to-SMA male adapter and the Type-N female-to-SMA female adapter together at the SMA connector ends of the adapters.

17. Connect the Type-N male connector to 4J15 at the top of the Receiver Cabinet.

18. Connect the power sensor to the Type-N female connector of the combination. Use the SMA torque wrench to ensure SMA connection is tight.

19. Measure the power out of the adapter combination.
    Record as $P_{\text{out of Type-N-to-SMA adapter combo}}$.

    $P_{\text{out of Type-N-to-SMA adapter combo}}$ = _____ dBm

20. Calculate the path loss of both Type-N-to-SMA adapters as below:

    $PL_{\text{Both Type-N-to-SMA adapters}}$ = $P_{\text{out of Type-N-to-SMA adapter combo}}$ (step 19)
    - $P_{\text{4J15 meas}}$ (step 9)
    = _____ - _____
    = _____ dB (Should be a negative number)

21. Calculate the path loss of a single Type-N-to-SMA adapter as below:

    $PL_{\text{Single Type-N-to-SMA adapter}}$ = $PL_{\text{Both Type-N-to-SMA adapters}}$ (step 20) / 2
    = _____ / 2
    = _____ dB Enter this value in Table 6-34.

22. Leave the Type-N male-to-SMA male adapter connector connected to 4J15, but disconnect the Type-N female adapter which is connected to the power meter at the SMA end of the adapter.

23. Connect the SMA female-to-female adapter to one end of the SMA test cable. The test cable supplied with the SE44-1 Adapter Kit has a male SMA connector on one end and a female SMA connector on the other end. If using this cable, it is not necessary to connect the SMA female-to-female adapter to the male end of the cable.

24. Connect the SMA test cable and adapter of the previous step between the SMA male and female connector ends of the Type-N-to-SMA adapters. Now, the power meter should be connected through the SMA test cable through adapters to 4J15. Use the SMA torque wrench to ensure all connections are tight.

25. Measure the power and record as $P_{\text{out adapters plus test cable}}$.

    $P_{\text{out adapters plus test cable}}$ = _____ dBm

26. Calculate the path loss of the test cable and female-to-female SMA adapter as follows:

    $PL_{\text{Test cable plus SMA female-to-female adapter}}$ = $P_{\text{out adapters plus test cable}}$ (step 25)
    - $P_{\text{out of Type-N-to-SMA adapter combo}}$ (step 19)
    = _____ - _____
    = _____ dB

    Enter in Table 6-34. This value will be used later in the Noise Path calibration.

27. Disconnect adapters and SMA test cable from 4J15. Disconnect the power sensor from SMA test cable and adapters.

28. Connect a Type-N 10 dB attenuator to 4J15.

29. Connect the power sensor to the Type-N 10 dB attenuator and record the meter reading $P_{\text{out 10dB attn}}$.

    $P_{\text{out 10dB attn}}$ = _____ dBm

30. Calculate the PL of the 10 dB attenuator as follows:

    $PL_{\text{10dB attn}}$ = $P_{\text{out 10dB attn}}$ (step 29) - $P_{\text{4J15meas}}$ (step 9)
    = _____ - _____
    = _____ dB Enter this value in Table 6-34.

31. Disconnect the test equipment from 4J15 and reconnect cable 4W100 to 4J15.

Table 6-34. Calibration of Adapters and Test Cable

| | |
|---|---|
| $PL_{\text{Type-N right angle adapter}}$ | dB (step 10) |
| $PL_{\text{Type-N female-to-female adapter}}$ | dB (step 14) |
| $PL_{\text{Single Type-N-to-SMA adapter}}$ | dB (step 21) |
| $PL_{\text{Test cable plus SMA female-to-female adapter}}$ | dB (step 26) |
| $PL_{\text{10dB attn}}$ | dB (step 30) |

6-6.28.3.3.2.2 CW Path Check.

1. Disconnect cable 4W104 from 4J16. Connect the power sensor, the right angle adapter, and a Type-N female-to-female adapter to the disconnected cable 4W104. Be careful not to bend the cable too far - that is the reason for using the right angle adapter.

2. Measure and record the power as follows:

   $P_{4W104\ meas}$ = _____ dBm (RDASOT Test Attenuation = 8 dB)

3. At the RDA System Console, entering the following to return to the CW Source Control Menu and change Test Attenuation to Ø dB and inject signal.

| Step | Operator Action | System Response/Comments |
|---|---|---|
| a. | **Ø<Return>** | Returns to CW Source Control Menu. |
| b. | **4<Return>** | To select Test Attenuation. `Enter the new RF Test Attenuation Value (0...103 dB)` is displayed. |
| c. | **Ø<Return>** | To select Ø dB attenuation; CW Source Control Menu is again displayed. |
| d. | **1<Return>** | To select Inject Signal. |

4. Measure the power and record as follows:

   $P_{4W104\ meas}$ = _____ dBM (RDASOT Test Attenuation = Ø dB)

5. Calculate $R122_{Final}$ as follows:

   $R122_{Final}$ = $P_{4W104\ meas}$ (Atten = 8 dB) (step 2) - $P_{4W104\ meas}$ (Atten = Ø dB) (step 4)
   = _____ - _____
   = _____ dB (Enter in Table 6-33 as $R122_{Final}$ value)

6. Calculate $P_{4J16}$ measured value as follows:

   $P_{4J16\ meas}$ = $P_{4W104\ meas}$ (step 2) - $PL_{Type\text{-}N\ right\ angle\ adapter}$ (Table 6-34)
   - $PL_{Type\text{-}N\ female\text{-}to\text{-}female\ adapter}$ (Table 6-34)
   = _____ - _____ - _____
   = _____ dBm

7. Calculate the expected value at P4J16 as follows: (Refer to Table 6-33, use original values except for R122)

   $P_{4J16\ expected}$ = R34 + R59 + R63 + R66 + $R122_{Final}$ (step 5)
   = _____ + _____ + _____ + _____ + _____
   = _____ dB

8. Calculate the PL error in the equipment shelter as follows:

$PL_{Error\ equip\ shelter}$ = $P_{4J16\ meas}$ (step 6) - $P_{4J16\ expected}$ (step 7)
= _____ - _____
= _____ dB

9. Calculate the measured value of the Antenna Pedestal path loss as follows:

$PL_{Antenna\ ped\ meas}$ = $P_{4J15\ meas}$ (6-6.28.3.3.2.1 step 9) - $P_{4J16\ meas}$ (step 6)
= _____ - _____
= _____ dB

10. Calculate the expected value of the Antenna Pedestal path loss as follows: (Refer to Table 6-33, use original values)

$PL_{Antenna\ ped\ expected}$ = R69 + R72 + R73 + R74 + R77 + R247 + R248
= _____ + _____ + _____ + _____ + _____ + _____ + _____
= _____ dB

11. Calculate the PL antenna pedestal error as follows:

$PL_{Antenna\ ped\ error}$ = $PL_{Antenna\ ped\ meas}$ (step 9) - $PL_{Antenna\ ped\ expected}$ (step 10)
= _____ - _____
= _____ dB

12. If the PL antenna pedestal error exceeds ± 0.2 dB, or if the value of R72 original in Table 6-33 is outside the range of 19.7 to 20.3 dB, calibrate the CW path using the procedure of paragraph 6-6.28.3.1 . If the path loss error of the equipment shelter (step 8) exceeds ± 0.1 dB, proceed to the next step. If the path loss error of the equipment shelter is less than ±0.1 dB, perform the next step, then proceed to step 31.

13. Disconnect the power sensor and adapters from cable 4W104 and reconnect cable 4W104 to 4J16.

14. At the RDA System Console, enter the following to return to the TESTSIG Source Selection Menu and turn off all source signals.

| Step | Operator Action | System Response/Comments |
|---|---|---|
| a. | **Ø<Return>** | Returns to CW Source Control Menu. |
| b. | **Ø<Return>** | To select Return to TESTSIG Source Selection Menu. |
| c. | **1<Return>** | To select All Sources Off; the TESTSIG Source Selection Menu appears again. |

15. Remove cable 4W114 from 4A1J3 on the Frequency Generator.

16. Connect a Type-N female-to-SMA male adapter to 4A1J3 and connect a calibrated 10dB attenuator to the power sensor. Then connect the 10dB attenuator and power sensor combination to the adapter on 4A1J3. Use an SMA torque wrench to ensure the connection is tight.

17. At the RDA System Console, TESTSIG Source Selection Menu, select CW Source and inject the signal as follows:

| Step | Operator Action | System Response/Comments |
|---|---|---|
| a. | **5<Return>** | To select CW Source; the CW Source Control Menu is displayed. |
| b. | **1<Return>** | To select Inject Signal. |

18. Measure and record $P_{4A1J3}$ ($R34_{Final}$) as follows:

$P_{4A1J3}$ = P meter - calibrated 10 dB attenuator value (Table 6-34)
- $PL_{Single\ Type\text{-}N\text{-}to\text{-}SMA\ adapter}$ (Table 6-34)
= _____ - _____ - _____
= _____ dBm Note that $P_{4A1J3}$ is larger than the meter reading by the sum of the attenuator and the adapter path loss. Record the result as $R34_{Final}$ in Table 6-33.

19. At the RDA System Console, enter the following to return to the TESTSIG Source Selection Menu and turn off all source signals.

| Step | Operator Action | System Response/Comments |
|---|---|---|
| a. | **Ø<Return>** | Returns to CW Source Control Menu. |
| b. | **Ø<Return>** | To select Return to TESTSIG Source Selection Menu. |
| c. | **1<Return>** | To select All Sources off; the TESTSIG Source Selection Menu appears again. |

20. Remove the power measuring equipment from 4A1J3 and reconnect 4W114 to 4A1J3.

**WARNING**

Hazardous voltages are present within the receiver cabinet. Take all standard precautions against electric shock. Failure to comply could cause serious injury or death.

21. At the Secondary Power Distribution Panel, set the Receiver cabinet circuit breaker CB22 to **OFF**. **Redundant sites,** use corresponding Secondary PDP for channel being calibrated.

**NOTES**

The multi-pin cable connected to 4A23J5 must be temporarily disconnected to gain access to 4A23J1.

It will be necessary to temporarily loosen the end of cable 4W112 at 4A22J5 to remove cable 4W112 connected to 4A23J1. Use caution when loosening or tightening these SMA connectors because connectors may strip.

Be careful to support the measuring apparatus so as not to damage SMA cable 4W112.

22. Disconnect the multi-pin cable connected to 4A23J5. Then, disconnect cable 4W112 from 4A23J1 and loosen cable 4A22J5 enough to allow movement of cable 4W112. Once cable 4W112 has been removed from 4A23J1, retighten cable 4W112 connected to 4A22J5. Connect the power sensor, the calibrated 10 dB attenuator, and a Type-N female-to-SMA female adapter to the disconnected SMA cable 4W112. Be sure to properly support the power sensor to avoid damage to 4W112.

23. At the Secondary Power Distribution Panel, set the Receiver cabinet circuit breaker CB22 to **ON**. **Redundant sites,** use corresponding Secondary PDP for channel being calibrated.

24. At the RDA System Console, enter the following to return to the CW Source Control Menu and inject signals.

| Step | Operator Action | System Response/Comments |
|---|---|---|
| a. | **5<Return>** | To select CW Source Control Menu. |
| b. | **1<Return>** | To select Inject Signal. |

25. Calculate the CW power at 4W112 as follows:

$P_{4W112\ meas}$ = P meter - calibrated 10 dB attenuator value (Table 6-34)
- $PL_{Single\ Type\text{-}N\text{-}to\text{-}SMA\ adapter}$ (Table 6-34).
= _____ - _____- _____
= _____ dBm. Note that $P_{4W112\ meas}$ is larger than the meter reading by the sum of the attenuator plus the adapter.

26. Calculate $R59_{Final}$ as follows:

$R59_{Final}$ = $P_{4W112\ meas}$ (step 25) - $R34_{Final}$ (step 18)
= _____ - _____
= _____ dB. Enter as $R59_{Final}$ in Table 6-33.

27. Calculate $R63_{Final}$ as follows:

$R63_{Final}$ = $P_{4J16\ meas}$ (step 6) - [$R34_{Final}$ + $R59_{Final}$ + $R66_{Original}$ + $R122_{Final}$]

= _____ - [ _____ + _____ + _____+ _____ ]

= _____ -_____

= _____ dB. Enter as $R63_{Final}$ in the place provided in the Table 6-33.

28. If you are planning on performing the Noise Path Calibration, turn off all sources by entering **Ø<Return>,** then **Ø<Return>** followed by **1<Return>** at the system console, disconnect the power sensor and 10dB attenuator from the Type-N female-to-SMA female adapter connected to 4W112, then remove the 10dB attenuator from the power sensor, and proceed to paragraph 6-6.28.3.3.2.3 . If not, proceed to next step.

**WARNING**

Hazardous voltages are present within the receiver cabinet. Take all standard precautions against electric shock. Failure to comply could cause serious injury or death.

29. At the Secondary Power Distribution Panel, set the Receiver cabinet circuit breaker CB22 to **OFF**, remove test equipment, reconnect 4W112, and multi-pin connector previously disconnected. Ensure the SMA connections at UD4A22J5 and UD4A23J1 are tightened. **Redundant sites,** use corresponding Secondary PDP for channel being calibrated.

30. At the Secondary Power Distribution Panel, set the Receiver cabinet circuit breaker CB22 to **ON**. **Redundant sites,** use corresponding Secondary PDP for channel being calibrated.

31. Terminate RDASOT by entering a series of **Ø<Return>** at the RDA System Console.

32. Bring up RDA applications software by entering **RDAUP<Return>** at the System Console.

33. Record R34, R59, R63, and R122 final values in Table 6-33 and enter in Adaptation Data using the procedures of paragraph 6-6.29 .

6-6.28.3.3.2.3 Noise Path Calibration. Once the CW path has been checked and/or calibrated, the Noise Path may be calibrated, resulting in new Adaptation Data value for R60.

1. Turn **ON** the RF Signal Generator and let it stabilize. Turn **OFF** the Signal Generator Modulation. Set the frequency to the site frequency and the output amplitude to Ø dBM.

2. Calibrate the power meter and power sensor in accordance with paragraph 6-6.22 .

3. Connect SMA test cable to the RF Signal Generator using appropriate adapters.

4. Connect the power sensor to the other end of the test cable and SMA female-to-female adapter through an SMA male-to-Type-N female adapter.

5. On the signal generator, turn **ON** the RF output by pressing the RF ON/OFF button to the in position.

6. Measure the output of the cable as:

   $P_{out\ test\ cable}$ = _____ dBm. Allow sufficient time for the reading to stabilize. It is not required to consider the path loss of the Type-N-to-SMA adapters since one of each is used to measure BOTH the input power and the output power in step 18 below.

7. On the signal generator, turn **OFF** the RF output by pressing the RF ON/OFF button to the out position.

8. At the RDA Applications Terminal, enter **STBY<Return>** then **TERP<Tab>** ***password*** **<Return>** to terminate the applications software, if not in RDASOT.

**WARNING**

Hazardous voltages are present within the receiver cabinet. Take all standard precautions against electric shock. Failure to comply could cause serious injury or death.

9. At the Secondary Power Distribution Panel, set the Receiver cabinet circuit breaker CB22 to **OFF**. **Redundant sites,** use corresponding Secondary PDP for channel being calibrated.

10. Disconnect 4W111 from the Internal Noise Source 4A25J1 and loosen 4W111 at 4A22J4 so that the cable can be moved out slightly to allow connection of the test cable to 4W111.

11. Remove the test cable and Type-N-to-SMA adapter from the power sensor. Remove the Type-N-to-SMA adapter from the SMA female-to-female adapter on the test cable. Connect the test cable and SMA female-to-female adapter to 4W111. Tighten 4A22J4 and the SMA adapter connected to 4W111.

**NOTES**

A CW signal must be used to calibrate R60 as described in this procedure. Use of RF Noise to calibrate R60 will result in a large error because of the RF Bandwidth considerations of the 4-Position Switch and the power measuring equipment.

The multi-pin cable connected to 4A23J5 must be temporarily disconnected to gain access to 4A23J1.

It will be necessary to temporarily loosen the end of cable 4W112 at 4A22J5 to remove cable 4W112 connected to 4A23J1. Use caution when loosening or tightening these SMA connectors because connectors may strip.

Be careful to support the measuring apparatus so as not to damage SMA cable 4W112.

12. Disconnect the multi-pin cable connected to 4A23J5. Then, disconnect cable 4W112 from 4A23J1 and loosen cable 4A22J5 enough to allow movement of cable 4W112. Once cable 4W112 has been moved out slightly from 4A23J1, retighten cable 4W112 connected to 4A25J5. Cable 4W112 will already be in position if continuing from the CW Path Check, paragraph 6-6.28.3.3.2.2 , step 28. Connect the Type-N female-to-SMA female adapter to 4W112. Now connect power sensor to the Type-N end of the adapter on 4W112. Be sure to properly support the power sensor to avoid damage to 4W112.

13. On the signal generator, turn **ON** the RF output by pressing the RF ON/OFF button to the in position.

14. At the Secondary Power Distribution Panel, set the Receiver cabinet circuit breaker CB22 to **ON**. **Redundant sites,** use corresponding Secondary PDP for channel being calibrated.

15. Press **<Shift>** and **<Port>** keys **simultaneously** to access the System Console.

16. At the RDA System Console, bring up the RDASOT program by entering the following:

| Step | Operator Action | System Response/Comments |
|---|---|---|
| a. | **RDASOT<Return>** | RDASOT Main Menu (Mode Selection Menu for Redundant sites) is displayed. |
| b. | **2<Return>**<br>Redundant sites only | To select LIMITED mode for this procedure at Redundant sites. |
| c. | **4<Return>** | To select Manual Control and Display Menu. |
| d. | **2<Return>** | To select Control RCVR/Signal Proc; the TESTSIG Source Selection Menu will be displayed. |
| e. | **6<Return>** | To select RF Noise Source; RF Noise Source Control Menu is displayed. |
| f. | **1<Return>** | To select Inject Signal. |

17. Measure and record the power at 4W112 as follows:

$P_{4W112\ meas}$ = _____ dBm

18. Calculate the final value of R60 as follows:

$R60_{Final}$ = $P_{4W112\ meas}$ (step 17) - $P_{out\ test\ cable}$ (step 6).
= _____ - _____
= _____ dB Record in Table 6-33.

**WARNING**

Hazardous voltages are present within the receiver cabinet. Take all standard precautions against electric shock. Failure to comply could cause serious injury or death.

19. At the Secondary Power Distribution Panel, set the Receiver cabinet circuit breaker CB22 to **OFF**. **Redundant sites,** use corresponding Secondary PDP for channel being calibrated.

20. On the signal generator, turn **OFF** the RF output by pressing the RF ON/OFF button to the out position.

21. Remove the test cable and adapter from 4W111 and reconnect 4W111 to 4A25J1.

22. Remove the power measuring equipment from 4W112. Reconnect 4W112 to 4A23J1 and the multi-pin cable at 4A23J5. The connector at 4A22J5 will require loosening to move 4W112 into place. Using the SMA torque wrench, ensure the connections on both ends of cables 4W111 (4A25J1 and 4A22J4) and 4W112 (4A22J5 and 4A23J1) are tight.

23. At the Secondary Power Distribution Panel, set the Receiver cabinet circuit breaker CB22 to **ON**. **Redundant sites,** use corresponding Secondary PDP for channel being calibrated.

24. Terminate RDASOT by entering **Ø<Return>** until the RDASOT tasks cancel.

25. At the RDA System Console, enter **RDAUP<Return>** to bring up the operational software.

26. Record R34, R63, R59, R60, and R122 final values in Table 6-33 and enter in Adaptation Data using the procedure of paragraph 6-6.29 where applicable.

6-6.28.3.3.2.4 Noise Source 4A25 Calibration.

**NOTES**

Previous successful completion of paragraphs 6-6.28.3.3.2.2 (CW Path Check) and paragraph 6-6.28.3.3.2.3 (Noise Path Calibration) is required before the following procedure is valid.

Performance of this procedure requires the use of the Micronetics Wireless Noise Standard NT-187-1, and must be requisitioned from the Primary Inventory Control Agency (PICA) G13 (CLS) at Kansas City, MO. The item must be returned upon completion of the calibration procedure.

The CAL OUT indicator on the Micronetics Wireless Noise Standard NT-187-1 indicates an out of tolerance condition when illuminated. It must be extinguished before use. If the CAL OUT light does not extinguish, return the NT-187-1 to Kansas City, MO.

1. Connect the NT-187-1 to AC power. A warm up period of at least 30 minutes is required before use.

2. Examine the calibration data stenciled on the NT-187-1 Noise Standard and the Offset value, then determine the Excess Noise Ratio (ENR) of the standard at the site frequency. It may be necessary to interpolate the stenciled data. The Offset value is a correction determined by comparison to the Primary Standard at the National Reconditioning Center.

   $ENR_{\text{Std value at site freq}}$ = Stenciled value + Offset
   = _____+ _____
   = _____

3. Calculate the value of $R35_{Test}$ as follows:

   $R35_{Test}$ = $ENR_{\text{Std value at site freq}}$ + $PL_{\text{Test cable plus SMA female- to- female adapter}}$ (Table 6-34).
   = _____ + _____
   = _____ dB Enter this value as $R35_{Test}$ in Table 6-33.

   Note that $R35_{Test}$ shall be less than $ENR_{\text{Std value at site freq}}$ because $PL_{\text{Test cable plus SMA fremale- to- female adapter}}$ is a negative number.

4. Terminate applications software by entering **STBY<Return>**, then **TERP<Tab>** ***password*** **<Return>** at the Applications Terminal command and parameter lines. Press **<Shift>** and **<Port>** keys **simultaneously** to view the system console.

5. Disconnect 4W111 from 4A25J1. This will require the loosening of 4W111 at 4A22J4 so that the cable can be moved out slightly. Connect one end of the calibrated test cable to the SMA output jack of the NT-187-1 Noise Standard. Connect the other end of the test cable through an SMA female-to-female adapter to 4W111. Re-tighten 4W111 at 4A22J4 and ensure all connections are tight using a SMA torque wrench.

6. Bring up the applications software by entering **RDAUP<Return>** on the System Console. Press **<Shift>** and **<Port>** keys **simultaneously** to view the applications terminal.

7. Ensure all of the Table 6-33 Final values of Adaptation Data, including $R35_{Test}$, have been entered using the **ICRA<Tab>** ***password*** **<Return>** command sequence per paragraph 6-6.29 .

8. After checking that the correct data is entered as per Table 6-33, enter **A<Return>** then **SC<Return>** to save the changes to disk. Enter **M<Return>** to return to the

Main Menu, then **TERP<Tab>** ***password*** **<Return>** to terminate the applications software. Press **<Shift>** and **<Port>** keys **simultaneously** to access the System Console.

9. Bring up the applications software by entering **RDAUP<Return>** on the System Console.

10. Press **<Shift>** and **<Port>** keys **simultaneously** to view the Applications Terminal.

11. When the STBY mode is indicated, enter **DIPD<Tab>REC<Return>** at the applications terminal command and parameter lines and record SYSTEM NOISE TEMP. This is the calibrated SYSTEM NOISE TEMP. Obtain a few different readings (the calibration is performed once per minute in STBY) and record the average as follows:

| Readings | SYSTEM NOISE TEMP |
|---|---|
| 1st | _____ |
| 2nd | _____ |
| 3rd | _____ |
| 4th | _____ |
| 5th | _____ |

Average SYSTEM NOISE TEMP calibrated = _____ K

It will now be necessary to obtain the same reading of SYSTEM NOISE TEMP with the system Noise Source 4A25 as that obtained with the NT–187–1 Noise Standard. Proceed as follows:

12. Disconnect the test cable from 4W111 and reconnect 4W111 to 4A25J1. Tighten 4A22J4 and 4A25J1 with a SMA torque wrench to restore normal system connections.

13. Determine the stencil value of ENR at the site frequency of the system Noise Source 4A25. It may be necessary to interpolate the stenciled values. This value will be the R35 starting point value.

$ENR_{Stencil\ 4A25}$ = _____ dB

14. Enter the $ENR_{Stencil\ 4A25}$ value (step 13) as the R35 starting point in Adaptation Data using the **ICRA<Tab>** ***password*** **<Return>** command sequence per paragraph 6–6.29. Be sure to save changes to disk. Terminate the applications software by entering **TERP<Tab>** ***password*** **<Return>**.

15. Press the **<Shift>** and **<Port>** keys **simultaneously** to access the System Console.

16. Bring up the applications software by entering **RDAUP<Return>.**

17. Press the **<Shift>** and **<Port>** keys **simultaneously** to access the Applications Terminal.

18. When the STBY mode is reached, enter **DIPD<Tab>REC<Return>** at the Applications Terminal and take some readings of SYSTEM NOISE TEMP. If the average is within ± 30K of the calibrated value of step 11, proceed to step 22. If the average is not within ± 30 K of the calibrated value of step 11, it will be necessary to adjust R35 until it is. If the SYSTEM NOISE TEMP is too high, R35 must be decreased and vice versa.

| Readings | SYSTEM NOISE TEMP |
|---|---|
| 1st | _____ |
| 2nd | _____ |
| 3rd | _____ |
| 4th | _____ |
| 5th | _____ |
| Average | _____ K |

19. If further adjustments are required, repeat step 14 by using the adjustment criteria of 0.1 dB = 7.9K and enter the new R35 value using the ICRA command sequence of paragraph 6–6.29. If the System Noise Temperature established by the Noise Standard cannot be obtained, then replace the Noise Source 4A25 per paragraph 6–5.26. Otherwise, proceed to step 20.

20. Bring up the applications software, check the value of SYSTEM NOISE TEMP in STBY as before. If the value is within ± 30 K of the calibrated value of step 11, enter the value of R35 in Table 6–33 as $R35_{Final}$ for record purposes. Place the system in the OPERATE mode. Record the SYSTEM NOISE TEMP after completion of the first volume scan as final SYSTEM NOISE TEMP.

21. If the calibrated SYSTEM NOISE TEMP of step 11 is in excess of 550K with the EMI Filter 2A1A3FL1/2 installed or 450K with the EMI Filter 2A1A3FL1/2 not installed, then the AGC Clocks need alignment per paragraph 6–6.24.7 or one or more of the LRUs in the receiver channel is probably excessively noisy since the Noise Path and Internal Noise Source are now properly calibrated. Proceed with normal error correction procedures.

22. When the SYSTEM NOISE TEMP is OK, proceed to perform Solar Calibration per paragraph 6–6.28.3.6.

6–6.28.3.4 Calibration of the RF Test Attenuator 4A23. The following procedure should be accomplished upon replacement of 4A23 and also prior to the performance of the CW Substitution check of paragraph 6–6.28.2.5.

**NOTE**

This procedure requires the installation of software build 10.0 or later.

6-6.28.3.4.1 Equipment and Tools Required.

None.

6-6.28.3.4.2 Procedure.

1. Enable local RDA control from the MSCF as follows:

   a. In the RPG Control/Status window (HCI Main Window) (Active/Controlling channel only for FAA Redundant systems), click on the **Control** block in the RDA container to open the RDA Control/Status window and observe the RDA Control: `field`. The RDA Control: field should indicate `RPG` assuming the RPG is in control.

   b. In the RDA Control area of the RDA Control/Status window, click on **Enable Local (RDA)** to allow control at the RDA.

   c. Click on the **Close** button in the upper left hand corner of the RDA Control/Status window to close the window.

2. At the RDA, enter **RELC<Return>** at the command line on the Applications Terminal to request local control.

3. With the operational software up and running, enter **STBY<Return>** on the command line and wait for 2 minutes. Before performing the RF Test Attenuator calibration, it is necessary that the On-line DC Offset and Noise Level calibration be performed successfully, i.e., that there be an absence of DC Offset alarms and IF Step Size alarms before continuing.

4. Terminate the operational program by entering **TERP<Tab>** ***password*** **<Return>** on the command and parameter lines at the Applications Terminal.

5. Press **<Shift>** and **<Port>** keys **simultaneously** to display the System Console. Wait for the operational tasks to cancel before proceeding.

**NOTE**

Ensure the receiver cabinet doors are closed. Performing the following steps with either of the cabinet doors open may corrupt the calibration data.

6. At the RDA System Console, bring up the RDASOT program by entering the following:

| Step | Operator Action | System Response/Comments |
|---|---|---|
| a. | **RDASOT<Return>** | RDASOT Main Menu (Mode Selection Menu for Redundant sites) is displayed. |
| b. | **2<Return>**<br>Redundant sites only | To select LIMITED mode for this procedure at Redundant sites. |

| Step | Operator Action | System Response/Comments |
|---|---|---|
| c. | **3<Return>** | To select Calibration Menu. |
| d. | **5<Return>** | To select DYN RNG/RF TST ATTN Routines; the DYN Range/RF Test Attenuation Selection Menu will appear. |
| e. | **2<Return>** | To select AGC Calibration Calculation; the AGC Calibration Data Menu will be displayed. |
| f. | **1<Return>** | To select Update RDASOT DEST 9; the DYN Range/RF Test Attenuation Selection Menu is displayed again. |
| g. | **4<Return>** | To select RF Test Attenuator Step Calculation. |
| h. | **1<Return>** | To select Update RDASOT DEST 9. |

**NOTE**

This begins a process whereby each step of the RF Test Attenuator is calibrated by collecting 10 sets of data for each step. The entire process takes about 6 minutes to accomplish.

7. Data for each step is presented on the display pages 1 through 8. Examine the NEW DIF data for each step. The tolerance is less than ±1.5 dB for each step from 1 to 59 dB and ±2.0 dB for each step from 60 to 103 dB.

8. After examining all of the steps, enter **Ø<Return>** at the RDA System Console.

9. If all of the steps are in tolerance, update the Adaptation Data by entering "**y**" when prompted by the display. This indicates that the RF Test Attenuator is good. Proceed to step 11.

10. If one or more of the results exceeds the tolerance, respond "**y**" but order a new 4A23 RF Test Attenuator and replace the old one as soon as possible. Re-run this procedure when the new attenuator is installed.

11. Terminate RDASOT by entering a series of **Ø<Return>** at the RDA System Console.

12. Bring up the operational software by entering **RDAUP<Return>**. This completes this procedure.

6-6.28.3.5 Delayed Klystron Path Calibration. Perform Klystron Output Path Calibration paragraph 6-6.28.3.5.1 , followed by Sampling Phase Calibration paragraph 6-6.28.3.5.2 , followed

by Calibration of MISC CAL LOSS KLYSTRON OUT TARGET paragraph 6-6.28.3.5.3. All three procedures must be performed in sequence. NWS EHB 6-511 paragraph 7.8.6.10.3, Path Loss Calibration - 1AT4 Output through UD4A26, should be accomplished prior to performing this procedure if it has not been performed recently as part of the transmitter/power monitor alignment. Should paragraph 7.8.6.10.3 be accomplished at a later date, this entire procedure should follow. If KD deltas exceed 1.5 dB or any 8-hour check alarms (LIN CHAN KLY OUT TEST SIGNAL DEG, LIN CHAN GAIN CAL CHECK DEG/MAINT REQ, or LIN CHAN CLUTTER REJECT DEG/MAINT REQ) are noted, perform the following procedure in its entirety.

6-6.28.3.5.1 Klystron Output Path Calibration.

6-6.28.3.5.1.1 Equipment and Tools Required.

1. Power Meter HP436A
2. Power Sensor HP8481A
3. Power Sensor HP8484A with 30 dB Reference Attenuator
4. Adapter, Type-N, female-to-SMA female
5. Attenuator, 20 dB
6. Torque wrench, SMA
7. Pliers

6-6.28.3.5.1.2 Procedure.

1. Enable local RDA control from the MSCF as follows:
   a. In the RPG Control/Status window (HCI Main Window) (Active/Controlling channel only for FAA Redundant systems), click on the **Control** block in the RDA container to open the RDA Control/Status window and observe the RDA Control: `field`. The RDA Control: field should indicate `RPG` assuming the RPG is in control.
   b. In the RDA Control area of the RDA Control/Status window, click on **Enable Local (RDA)** to allow control at the RDA.
   c. Click on the **Close** button in the upper left hand corner of the RDA Control/Status window to close the window.
2. At the RDA, enter **RELC<Return>** on the command line of the Applications Terminal to request local control.
3. At the RDA Applications Terminal command line, enter **STBY<Return>** to place the RDA in Standby.

4. At the RDA Applications Terminal command line, enter **TERP<Tab>** ***password*** **<Return>** to terminate the operational software.
5. Press the **<Shift>** and **<Port>** keys **simultaneously** to access the System Console.
6. Connect the HP8481A power sensor to the power meter. Calibrate according to the procedures in paragraph 6-6.22 .
7. Disconnect cable 1W61 from 1AT4 located above the Transmitter UD3.
8. Connect a 20 dB attenuator to 1AT4.
9. Connect the power sensor to the 20 dB attenuator at 1AT4.
10. At the RDA System Console, bring up the RDASOT program by entering the following:

| Step | Operator Action | System Response/Comments |
|---|---|---|
| a. | **RDASOT<Return>** | RDASOT Main Menu (Mode Selection Menu for Redundant sites) is displayed. |
| b. | **1<Return>**<br>Redundant sites only | To select FULL mode for this procedure at Redundant sites. |
| c. | **4<Return>** | To select Manual Control and Display Menu. |
| d. | **2<Return>** | To select Control RCVR/Signal Proc; the TESTSIG Source Selection Menu will appear. |
| e. | **4<Return>** | To select Klystron Output Source; the Klystron Output Source Control Menu will be displayed. |
| f. | **4<Return>** | To select Test Attenuation. `Enter the new RF Test Attenuation Value (0...103 dB)` is displayed. |
| g. | **Ø<Return>** | To select 0 dB attenuation; CW Source Control Menu is again displayed. |
| h. | **1<Return>** | To select Inject Signal. |

11. Record the average power.

    $P_{in@1AT4}$ = _____ dBm

12. At the RDA System Console, enter **<Return>** and **Ø<Return>** twice to turn off the transmitter.

13. Disconnect the power sensor and the 20 dB attenuator from 1AT4.

14. Reconnect cable 1W61 to 1AT4.

15. Disconnect the HP8481A power sensor from the power meter and connect the HP8484A power sensor to the power meter and calibrate it using the 30 dB Reference Attenuator as per paragraph 6-6.22 . Remove the Reference Attenuator after the power sensor has been calibrated.

16. Terminate RDASOT by entering a series of **Ø<Return>** at the RDA System Console.

**WARNING**

Hazardous voltages are present within the receiver cabinet. Take all standard precautions against electric shock. Failure to comply could cause serious injury or death.

17. At the Secondary Power Distribution Panel, set the Receiver circuit breaker CB22 to **OFF**. **Redundant sites**, use the corresponding Secondary PDP for the channel being calibrated.

**NOTES**

The multi-pin cable connected to 4A23J5 must be temporarily disconnected to gain access to 4A23J1.

It will be necessary to temporarily loosen the end of cable 4W112 at 4A22J5 to remove cable 4W112 connected to 4A23J1. Use caution when loosening or tightening these SMA connectors because connectors may strip.

Be careful to support the measuring apparatus so as not to damage SMA cable 4W112.

18. Disconnect cable 4W112 from 4A23J1. The cable normally connected to 4A23J5 must be temporarily removed in order to gain access to 4W112P2.

19. Connect the HP8484A power sensor to 4W112P2 using a Type-N female-to-SMA female adapter and the same 20 dB attenuator previously used at 1AT4.

20. At the Secondary Power Distribution Panel, set the Receiver circuit breaker CB22 to **ON**. **Redundant sites**, use the corresponding Secondary PDP for the channel being calibrated.

21. At the RDA System Console, bring up the RDASOT program by entering the following:

| Step | Operator Action | System Response/Comments |
|---|---|---|
| a. | **RDASOT<Return>** | RDASOT Main Menu (Mode Selection Menu for Redundant sites) is displayed. |
| b. | **1<Return>**<br>Redundant sites only | To select FULL mode for this procedure at Redundant sites. |
| c. | **4<Return>** | To select Manual Control and Display Menu. |
| d. | **2<Return>** | To select Control RCVR/Signal Proc; the TESTSIG Source Selection Menu will appear. |
| e. | **4<Return>** | To select Klystron Output Source; the Klystron Output Source Control Menu will be displayed. |
| f. | **1<Return>** | To select Inject Signal. |

22. Measure the average power at 4W112P2. Record as:

$P_{avg\ Kly@4W112P2}$ = _____ dBm

23. Calculate the measured delayed klystron path loss from 1W61 to 4W112P2 as follows:

$PL_{1W61\_4W112P2\ meas}$ = $P_{avg\ Kly@4W112P2}$ - $P_{in@1AT4}$ (from step 11)

= _____ - _____

= _____ dBm

**NOTE**

The following Receiver Adaptation Data values should have been recorded in Table 6-26.

24. Calculate the expected path loss from 1W61 to 4W112P2 as follows:

$PL_{1W61\_4W112P2\ expected}$ = R48 + R49 +R50 + R53 + R55 + R57

= _____ + _____ + _____ + _____ + _____ + _____

= _____ dB

25. Calculate the delayed klystron path loss as follows:

$PL_{delayed\ kly\ error} = PL_{1W61\_4W112P2\ meas} - PL_{1W61\_4W112P2\ expected}$

= _____ - _____

= _____ dB

26. Apply this error as a correction to R55, the path loss of the 10 µsec delay line as follows:

$R55_{New} = R55 + PL_{delayed\ kly\ error}$

= _____ + _____

= _____ dB

Enter this value in Table 6-26 and update Adaptation Data as described in paragraph 6-6.29 .

27. At the RDA System Console, enter the following to return to the TESTSIG Source Selection Menu and turn off all source signals.

| Step | Operator Action | System Response/Comments |
|---|---|---|
| a. | **Ø<Return>** | Returns to Klystron Output Source Control Menu. |
| b. | **Ø<Return>** | To select Return to TESTSIG Source Selection Menu. |
| c. | **1<Return>** | To select All Sources Off; the TESTSIG Source Selection Menu appears again. |

28. Disconnect the power sensor and the adapter from 4W112P2.

29. Terminate RDASOT by entering a series of **Ø<Return>** at the RDA System Console.

**WARNING**

Hazardous voltages are present within the receiver cabinet. Take all standard precautions against electric shock. Failure to comply could cause serious injury or death.

30. At the Secondary Power Distribution Panel, set the Receiver circuit breaker CB22 to **OFF**. **Redundant sites**, use the corresponding Secondary PDP for the channel being calibrated.

31. Reconnect cable 4W112 to 4A23J1 Reconnect cable temporarily disconnected from 4A23J5.

32. At the Secondary Power Distribution Panel, set the Receiver circuit breaker CB22 to **ON**. **Redundant sites**, use the corresponding Secondary PDP for the channel being calibrated.

33. Enter **RDAUP<Return>** at the RDA System Console to bring up operational program.

34. Press **<Shift>** and **<Port> simultaneously** to access the Applications Terminal.

35. Update R55 Adaptation Data using procedures in paragraph 6-6.29 .

**NOTE**

At this point in the procedure, after R55 has been changed, LOG/LIN CHAN CAL degraded alarms may be observed. This is to be expected until the remainder of the procedure is completed.

6-6.28.3.5.2 Sampling Phase Calibration (R7 in Adaptation Data). This is the second part of the three part Delayed Klystron Path Calibration procedure.

6-6.28.3.5.2.1 Equipment and Tools Required. None.

6-6.28.3.5.2.2 Procedure. It is necessary to perform this procedure at the RDA. Proceed as follows:

1. Enable local RDA control from the MSCF as follows:

   a. In the RPG Control/Status window (HCI Main Window) (Active/Controlling channel only for FAA Redundant systems), click on the **Control** block in the RDA container to open the RDA Control/Status window and observe the RDA Control: `field`. The RDA Control: field should indicate `RPG` assuming the RPG is in control.

   b. In the RDA Control area of the RDA Control/Status window, click on **Enable Local (RDA)** to allow control at the RDA.

   c. Click on the **Close** button in the upper left hand corner of the RDA Control/Status window to close the window.

2. At the Applications Terminal command line, enter **RELC<Return>** to request local control.

3. Check that the RDA is operating in VCP21. If this is not the case, enter **STBY<Return>** then enter **SELP<Tab>21<Return>**. Enter **OPER<Return>**. Check that the status field of the RDA Summary Status indicates OPER-21.

4. Enter **TERP<Tab>*password*<Return>** to terminate the operational software.

5. Press the **<Shift>** and **<Port>** keys **simultaneously** to shift to the RDA System Console.

6. At the RDA System Console, enter **RDAUP<Return>** to bring up the operational software.

7. Press the **<Shift>** and **<Port>** keys **simultaneously** to access the Applications Terminal.

8. The Applications Terminal screen will be refreshed as the software comes up. After a few minutes, the STBY mode will be indicated. At that time, enter **DIPD<Tab>CHK<Return>** on the command and parameter lines. Record the information indicated in Table 6-35 for the default R7 value. The KD1 LIN TGT EXPECTED AMP, KD1 LIN TGT MEASURED AMP, UNFILTERED LIN CHAN PWR, and FILTERED LIN CHAN PWR are available on this display. The entry for SUPPR (suppression) is calculated as follows:

   SUPPR = FLTRD PWR - UNFLTRD PWR

9. At the Applications Terminal command and parameter lines, enter **ICRA<Tab>** ***password*** **<Return>** to access the Adaptation Data. The Adaptation Control menu will be displayed.

10. At the command line of the Adaptation Data menus, enter the following:

| Step | Operator Action | System Response/Comments |
|---|---|---|
| a. | **SF<Return>** | To Select File; the Select File for Modification menu will be displayed. |
| b. | **C<Return>** | To select Current; the Adaptation Edit Control menu will be displayed. |
| c. | **R<Return>** | To select Receiver; Receiver Adaptation Data will appear. Record R7: _____ |
| d. | **C<Tab>7** | To change value of R7. |
| e. | **1<Return>** | To set new value for R7. |
| f. | **A<Return>** | To return to Adaptation Edit Control menu. |
| g. | **SC<Return>** | To save changes to disk; the Adaptation Control menu is displayed. |
| h. | **M<Return>** | Return to Applications Terminal Main Menu. |

11. At the Applications Terminal command and parameter lines, enter **TERP<Tab>** ***password*** **<Return>** to terminate the operational software to effect the change made to R7.

12. Repeat steps 5 through 11, but select a new value of R7 (2 through 15) in step 10.e. Collect data for all the values of R7. The completed data set should resemble the example set depicted in Table 6-35.

13. Examine the data collected in Table 6-35. It should be possible to define a zone of about four values of KD1 MEASURED which correspond to the more or less flat peak of the pulse and which has suppression greater than 50 dB. The R7 value which corresponds to the middle of this range is the optimum value. The optimum setting for R7 will normally also reflect a peak in the KD1 LIN TGT measured values. If suppression of 50 dB cannot be obtained regardless of the value of R7, the clutter filter function is not working correctly and must be repaired in accordance with the Primary Fault Isolation Flow Charts, Figure 6-2, sheet 46. If clutter suppression is adequate, proceed to the next step.

14. At the Applications Terminal command and parameter lines, enter **ICRA<Tab>** ***password*** **<Return>** to access the Adaptation Data. The Adaptation Control menu will be displayed.

15. At the command line of the Adaptation Data menus, enter the following:

| Step | Operator Action | System Response/Comments |
|---|---|---|
| a. | **SF<Return>** | To Select File; the Select File for Modification menu will be displayed. |
| b. | **C<Return>** | To select Current; the Adaptation Edit Control menu will be displayed. |
| c. | **R<Return>** | To select Receiver; Receiver Adaptation Data will appear. |
| d. | **C<Tab>7** | To change value of R7. |
| e. | ***X*** **<Return>** | Where *X* is the new optimum value for R7. **Refer to step 13 and Table 6-35 to obtain the optimum value.** |
| f. | **A<Return>** | To return to Adaptation Edit Control menu. |

| Step | Operator Action | System Response/Comments |
|---|---|---|
| g. | **SC<Return>** | To save changes to disk; the Adaptation Control menu is displayed. |
| h. | **M<Return>** | Return to Applications Terminal Main Menu. |

16. At the Applications Terminal command and parameter lines, enter **TERP<Tab>** ***password*** **<Return>** to terminate the operational software to effect the change made to R7.
17. Press the **<Shift>** and **<Port>** keys **simultaneously** to access the RDA System Console. Wait for the applications tasks to cancel.
18. At the RDA System Console, enter **RDAUP<Return>** to load software.
19. Press the **<Shift>** and **<Port>** keys **simultaneously** to access the RDA Applications Terminal.
20. At the Applications Terminal command and parameter lines, enter **ICRA<Tab>** ***password*** **<Return>** to access the Adaptation Data. The Adaptation Control menu will be displayed.
21. Use the procedures in steps 15.a. through 15.c. above and check that the optimum value of R7 is displayed. If R7 is not the optimum value that was entered in step 15.e., reenter the optimum value, save the change, and verify that the change has been saved to the disk using the procedures in steps 14 through 21.
22. Terminate access to Adaptation Data by performing the following steps:

| Step | Operator Action | System Response/Comments |
|---|---|---|
| a. | **A<Return>** | To return to Adaptation Edit Control menu. |
| b. | **CE<Return>** | To Cancel Edits; the Adaptation Control menu is displayed. |
| c. | **M<Return>** | To return to applications terminal Main Menu. |

6-6.28.3.5.3 Calibration of MISC CAL LOSS (SP/LP) KLYSTRON OUT TARGET (R47 (SP) and R44 (LP) in Adaptation Data).

6-6.28.3.5.3.1 Equipment and Tools Required. None.

6-6.28.3.5.3.2 Short Pulse Procedure (R47).

1. Examine the data in Table 6-35 for the optimum value of R7. Calculate the KD1 delta at the optimum value of R7 as follows:

$KD1_{delta}$ = $KD1_{measured}$ - $KD1_{expected}$

= _____ - _____

= _____ dB

2. Apply this KD1 delta as a correction to R47, the MISC CAL LOSS SHORT PULSE KLYSTRON OUT TARGET as follows:

$R47_{New}$ = R47 + $KD1_{delta}$

= _____ + _____

= _____ dB

Example:
Assume that the value of R47 in adaptation data is -9.4. Using the sample data in Table 6-35, and selecting a value of R7 = 9 to be optimum, KD1 measured = +11.5 and KD1 expected = +10.8. The new value of R47 is calculated below:

$R47_{New}$ = R47 + $KD1_{delta}$ (step 1)
= - 9.4 + 0.7
= -8.7 dB

With respect to this example, the correction increases KD1 expected by 0.7 dB, thus making KD1 expected equal KD1 measured.

3. Record new final value of R47 in Table 6-26 and Receiver adaptation data using paragraph 6-6.29 procedures.

Table 6–35. Delayed Klystron Sampling Calibration

**CHANNEL** _____

| R7 | KD1 LIN TGT EXPECT | KD1 LIN TGT MEAS | UNFLTRD LIN CHAN PWR | FLTRD LIN CHAN PWR | SUPPR |
|---|---|---|---|---|---|
| 1 | _____ | _____ | _____ | _____ | _____ |
| 3 | _____ | _____ | _____ | _____ | _____ |
| 5 | _____ | _____ | _____ | _____ | _____ |
| 7 | _____ | _____ | _____ | _____ | _____ |
| 9 | _____ | _____ | _____ | _____ | _____ |
| 11 | _____ | _____ | _____ | _____ | _____ |
| 13 | _____ | _____ | _____ | _____ | _____ |
| 15 | _____ | _____ | _____ | _____ | _____ |
| Example: | | | | | |
| 1 | 10.8 | 3.5 | +2.7 | –48.2 | –50.9 |
| 3 | 10.8 | –2.0 | –2.1 | –51.2 | –49.1 |
| 5 | 10.8 | –7.5 | –8.0 | –50.7 | –42.7 |
| 7 | 10.8 | +11.5 | +11.1 | –46.6 | –57.7 |
| 9 | 10.8 | +11.5 | +11.1 | –47.2 | –58.3 |
| 11 | 10.8 | +10.5 | +10.2 | –47.2 | –57.4 |
| 13 | 10.8 | +9.0 | +8.8 | –48.8 | –57.6 |
| 15 | 10.8 | +6.5 | +6.0 | –47.9 | –53.9 |

Conclusions from Example: R7 = 6 is start of pulse. Optimum value of R7 is 9. Clutter suppression at R = 9 is –47.2 – [+11.1] = –58.3 dB

6–6.28.3.5.3.3 Long Pulse Procedure (R44).

1. At the Applications Terminal, enter **TERP<Tab>*password*<Return>**.
2. Press the **<Shift>** and **<Port>** keys **simultaneously** for the RDA System Console.
3. Wait for the applications tasks to cancel and enter **RDAUP<Return>**.
4. Press **<Shift>** and **<Port> simultaneously**.
5. As soon as the Applications Terminal refreshes, enter **SELP<Tab>31<Return>** followed by **OPER<Return>**.

**NOTE**

These commands must be entered before the normal 8–hour check completes. This will force the RDA to do an 8–hour check in Long Pulse mode when returning to Standby.

6. Observe that a normal VCP is occurring in Long Pulse and then enter **STBY<Return>**. Note that the RDA does an 8–hour check in VCP31. Wait until the Status indicates STBY.

7. Enter **DIPD<Tab>CHK<Return>**. Calculate the new KD1 delta as follows:

   $KD1_{delta} = KD1_{measured} - KD1_{expected}$

   = _____ – _____

   = _____ dB

8. Apply this KD1 delta as a correction to R44, the MISC CAL LOSS LONG PULSE KLYSTRON OUT TARGET as follows:

   $R44_{New} = R44 + KD1_{delta}$

   = _____ + _____

   = _____ dB

9. Record new final value of R44 in Table 6–26 and Receiver adaptation data using paragraph 6–6.29 procedures. This completes this procedure.

6–6.28.3.6 Solar Calibration. The on–line calibration procedures outlined in earlier parts of this section use internally generated test signals which are inserted at the input of the Receiver Protector 2A3J3. These test signals calibrate all circuitry from this point through the signal processors. Note that this does not include the antenna, the radome, and the rest of the circuitry from the antenna feedhorn down to the waveguide input to the Receiver Protector 2A3J1. Suncheck Subtest 2 is designed to calibrate this circuitry. **It is essential that all previous calibrations of section 6–6.28.3.3 be performed properly, including a check of the calibration of the Internal Noise Source 4A25, prior to doing the Solar Calibration procedure.**

6–6.28.3.6.1 Equipment and Tools Required.

1. Calculator, scientific

6–6.28.3.6.2 Procedure.

**NOTE**

The steps within this Note calculate the **original** values of A1 and A2. They are provided for a baseline only. The original A2 value may be the A2 value loaded in Adaptation Data. The **final** A1 value will be calculated using the steps of paragraph 6–6.28.3.6.2.

The Antenna Gain is Antenna adaptable parameter A1. Calculate the original value for A1 as follows:

A1 original = 38.43 + [2.5667×(Site Frequency in MHz (TR3)/1000)]
= 38.43 + [2.5667×( _____ /1000)]
= 38.43 + [2.5667× _____ ]
= 38.43 + _____
= _____

Example: Assume TR3 (Site Frequency in MHz) = 2995.

A1 original = 38.43 + [2.5667×(Site Frequency in MHZ (TR3)/1000)]
= 38.43 + [2.5667×(2995/1000)]
= 38.43 + [2.5667×2.995]
= 38.43 + 7.69
= 46.12

The **final** value of A1 to be entered in Antenna adaptation data is obtained per the steps in this paragraph.

The beamwidth in degrees is Antenna adaptable parameter A2. Calculate the original value for A2 as follows:

A2 original = 1.595 – [0.243667× (Site Frequency in MHz (TR3)/1000)]
= 1.595 – [0.243667×( _____ /1000)]
= 1.595 – [0.243667×_____ ]
= 1.595 – _____
= _____ degrees

Example: Assume TR3 (Site Frequency in MHz) = 2995

A2 original = 1.595 – [0.243667×(Site Frequency in MHz (TR3)/1000)]
= 1.595 – [0.243667×(2995/1000)]
= 1.595 – [0.243667×2.995]
= 1.595 – .730
= 0.865 (enter as 0.87) degrees

This is the original value for A2 to be entered in adaptation data.

1. Perform Suncheck Subtest 1 per paragraph 6–6.28.1.5.3 through step 14.
2. Obtain the latest Solar Flux data by using the Internet or calling the Space Environment Center by either of the following methods:
   a. If Internet access is available, enter Internet address www.sec.noaa.gov to access the Space Environment Center Home Page. Enter the following sequence to obtain the latest flux for Penticton Solar Lab which has a wavelength of 10.7 cm

and a frequency of 2800 MHz:
www.sec.noaa.gov ⇒ Space Weather Now ⇒ User Groups – Radio (scroll to bottom of Web page) ⇒ Report of Solar & Geophysical Activity ⇒ select the latest date of Report of Solar–Geophysical Activity ⇒ go to paragraph IV, Penticton 10.7 cm Flux ⇒ Observed (latest date) or Predicted for next three days ⇒ obtain flux data.

b. If the Internet is not available, call the Space Environment Center at (303) 497–3171. Be prepared to copy some data. Request the latest Solar Flux Data for Penticton at 2800 MHz

c. Record both the observed and predicted Solar Flux data for Penticton 10.7 cm Flux for the latest dates.

Observed _____ SFU Date _____ Site Frequency

Predicted _____ SFU Date _____

d. Determine any correction to the observed or predicted Solar Flux data, if any, by using Table 6–36 and the following steps.

1. Using the SFUs from step c, locate the closest SFU value under the Solar Flux column.

2. Using your site frequency, locate the column that is closest to your site frequency.

3. Locate the correction value where the row of the closet SFU value intersects the column with the closest frequency. Record the value below.

Correction Value _____

e. Apply the correction value to the SFUs to be used from step c above.

Corrected SFU Value = Observed/Predicted SFU + Correction Value

= _____ + _____

= _____

Table 6–36. Solar Flux Correction for Site Frequency

| Solar Flux | 2700 MHz | 2800 MHz | 2900 MHz | 3000 MHz |
|---|---|---|---|---|
| 100 SFU | –1 | 0 | +1 | +2 |
| 150 SFU | –2 | 0 | +2 | +4 |
| 200 SFU | –3 | 0 | +3 | +6 |
| 250 SFU | –4 | 0 | +4 | +8 |

Example:

From the Internet we read as follows:

IV. Penticton 10.7 cm Flux
Observed 16 Oct 161
Predicted 17 Oct –19 Oct 160/165/175

Today's date is 17 Oct, so the value of 160 SFUs will be used. Site frequency is 2865 MHz. From Table 6–36, the Solar Flux correction value to the nearest SFU is +2. The corrected SFU value is 160 + 2 = 162.

3. Perform Subtest 2, the Antenna Gain/Loss check. The program will prompt you for data as follows:

   a. Whether one or two solar pairs is used: enter **1<Return>**.

   b. For frequency: enter **2800<Return>**.

   c. For Solar Data: enter ***corrected Solar Flux data*** from step 2.e. **<Return>**.

4. Record the Gain Adjustment and A1 Estimate in Table 6–37. Repeat the Subtest 2 procedure for a total of five different sets of readings using the same frequency and SFU as used the first time. Subtest 1 may be deselected during the collection of the four additional data sets.

Table 6–37. Suncheck Subtest 2 Results

| Reading | Gain Adjustment (dB) | A1 Estimate (dB) |
|---|---|---|
| 1st | | |
| 2nd | | |
| 3rd | | |
| 4th | | |
| 5th | | |
| Average | | |

5. Calculate the mean (average) Gain Adjustment and A1 Estimate using a suitable calculator and enter in Table 6–37.

6. The average Gain Adjustment shall be 0 ±0.3 dB. If this is not the case and the Gain Adjustment is a positive number (i.e., the measured Sun Noise Temperature is too high), the Subtest 2 data may be corrupted by sunspot or solar flare activity. Before taking remedial action, repeat the above procedure a few times over the next few days. The anomalous sun activity is of relatively short duration and should not be experienced over a few days time interval. Further, it will always be in a direction which increases the measured Sun Noise Temperature over the expected value.

7. If the average Gain Adjustment is 0 ±0.3 dB, this procedure is complete.

8. If the average Gain Adjustment is not 0 ±0.3 dB, and the possibility of anomalous solar activity has been eliminated, perform the noise calibration procedures of paragraph 6–6.28.3.3. If this does not correct the problem, enter the final average A1 Estimate in adaptation data as the new A1, Antenna Gain, per the procedures in paragraph 6–6.29.

9. At the RDA System Console, enter **Ø<Return>** to exit RDASOT program.

10. At the RDA System Console, enter **RDAUP<Return>** to load operational program.

11. Press the **<Shift>** and **<Port>** keys **simultaneously** to access the Applications Terminal.

12. At the Applications Terminal command line, enter **OPER<Return>**.

13. With the system in the operate mode, allow enough time for the transmitter power and delta SYSCAL to stabilize. The delta SYSCAL shall be less than 0 ±0.3 dB. If not, at the applications terminal, enter **DIPD<Tab>CAL<Return>** on the command and parameter lines. Then enter **PAGF<Return>** and note the value of SHORT PULSE, LIN CHAN SYSCAL.

    SHORT PULSE, LIN CHAN SYSCAL _____ dB

14. Enter the value of SHORT PULSE, LIN CHAN SYSCAL as the new value for R234 in Adaptation Data per the procedures in paragraph 6-6.29 . Be sure to save the changes to disk, then terminate the operational software.

15. At the RDA System Console, enter **RDAUP<Return>**. The settled value of SHORT PULSE, LIN CHAN SYSCAL shall be 0 ±0.3 dB in the operate mode. This completes the Suncheck Subtest 2 procedure.

## 6-6.29 RECEIVER ADAPTATION DATA ENTRY AND DISPLAY.

This procedure provides instructions to perform the following:

1. Display desired page of receiver adaptation data on the RDA Applications Terminal monitor.

2. Modify receiver adaptation data on a particular line and page.

3. Save modified adaptation data to disk.

One technician is required at the RDA equipment shelter.

### 6-6.29.1 Equipment and Tools Required. None

### 6-6.29.2 Initial Conditions/Preliminary Setup.

1. Enable local RDA control from the MSCF as follows:

    a. In the RPG Control/Status window (HCI Main Window) (Active/Controlling channel only for FAA Redundant systems), click on the **Control** block in the RDA container to open the RDA Control/Status window and observe the RDA Control: `field`. The RDA Control: field should indicate RPG assuming the `RPG` is in control.

b. In the RDA Control area of the RDA Control/Status window, click on **Enable Local (RDA)** to allow control at the RDA.

c. Click on the **Close** button in the upper left hand corner of the RDA Control/Status window to close the window.

2. At the RDA Applications Terminal command line, enter **RELC<Return>** to request local control.

3. At the RDA Applications Terminal command line, enter **STBY<Return>** to place RDA in standby.

**NOTE**

The transmitter in standby will increase speed of Adaptation Data Table manipulator.

6-6.29.3 Adaptation Data Retrieval Procedure.

1. Display desired page of receiver adaptation data on the RDA Applications Terminal monitor as follows:

| Step | Operator Action | System Response/Comments |
|---|---|---|
| a. | At command line of Main Menu, enter **ICRA<Tab>** | `ICRA` displayed on command line. Cursor moves to parameter line. |
| b. | At parameter line, enter ***password*<Return>** | Adaptation Control menu is displayed. |
| c. | At command line, enter **SF<Return>** | Select File for Modification menu is displayed. |
| d. | At command line, enter **C<Return>** | Selects current version of adaptation data file. Adaptation Edit Control menu is displayed. |
| e. | At command line, enter **R<Return>** | Page 1 of Receiver Adaptation menu is displayed. |
| f. | To page forward, enter **F<Return>** | New page is displayed. |
| g. | To page back, enter **B<Return>** | Previous page is displayed. |

2. Modify/change receiver adaptation data on a particular page and line as follows:

| Step | Operator Action | System Response/Comments |
|---|---|---|
| a. | Use step 1.f or 1.g to display page of parameter to be modified. | |
| b. | At the command line, enter **C<Tab> *line number*<Return>** | Line 20 displays allowable range of values; line 21 displays data to be changed. |
| c. | Enter ***new value*<Return>** | New value is written in menu area. |

Repeat steps 2.a through 2.c until all new items have been entered.

3. Save modified adaptation data to disk as follows:

| Step | Operator Action | System Response/Comments |
|---|---|---|
| a. | At command line, enter **A<Return>** | Adaptation Edit Control menu is displayed. |
| b. | At command line, enter **SC<Return>** | Store changes to disk in current version of adaptation data file.<br>Adaptation Control menu is displayed. |
| c. | At command line, enter **CF<Return>** | Choose File For Next Restart menu is displayed. |
| d. | At command line, enter **C<Return>** | Selects current version of adaptation data for restart or cold start of RDASC applications terminal. Main Menu is displayed. |

**NOTE**

For the RDASC to make use of the new data, the RDA applications program must be terminated and restarted.

| | | |
|---|---|---|
| e. | At the command line, enter **TERP<Tab>** | Cursor moves to parameter line. |
| f. | Enter ***password*<Return>** | RDA applications program is terminated. |
| g. | Wait one minute. | |
| h. | Press **<Shift>** and **<Port>** keys **simultaneously**. | Terminal switches to RDA System Console. |

| Step | Operator Action | System Response/Comments |
|---|---|---|
| i. | At RDA System Console, enter **RDAUP<Return>** | RDA applications program is restarted. |
| j. | Press **<Shift>** and **<Port>** keys **simultaneously**. | Terminal switches to Applications Terminal. |

6-6.30 DIGITAL CONTROL UNIT (DCU) UD5A6 AZIMUTH AND ELEVATION D/A CONVERTER/TACH ADJUSTMENTS.

6-6.30.1 Equipment and Tools Required.

1. Screwdriver, Phillips-tip
2. Alignment Tool
3. Digital Multimeter, Fluke 8060A or equivalent, with leads
4. ESD Wrist Strap

6-6.30.2 Initial Conditions/Preliminary Setup.

1. Enable local RDA control from the MSCF as follows:
   a. In the RPG Control/Status window (HCI Main Window) (Active/Controlling channel only for FAA Redundant systems), click on the **Control** block in the RDA container to open the RDA Control/Status window and observe the RDA Control: `field`. The RDA Control: field should indicate `RPG` assuming the RPG is in control.
   b. In the RDA Control area of the RDA Control/Status window, click on **Enable Local (RDA)** to allow control at the RDA.
   c. Click on the **Close** button in the upper left hand corner of the RDA Control/Status window to close the window.
2. At the RDA Applications Terminal command line, enter **RELC<Return>** to request local control.
3. At the RDA Applications Terminal command line, enter **STBY<Return>** to place RDA in standby.
4. At the RDA Applications Terminal command and parameter lines, enter **TERP<Tab>** ***password*** **<Return>** to terminate the operational program.
5. Press the **<Shift>** and **<Port>** keys **simultaneously** to access the RDA System Console.
6. Open rear middle bay cabinet door.

6-6.30.3 DCU UD5A6A1 D/A Converter Adjustments. The AZ/EL Offset and Gain potentiometers on the DCU Analog Board UD5A6A1 are adjusted to control the amount of gain and offset voltage that is sent to the azimuth and elevation drive motors via the Pedestal Power Amplifier UD5A7. It is important to adjust the offset first, then the gain. The offset is the "balance" of the voltage spread above (+), and below (-) zero, with +10 Vdc and -10 Vdc being the parameters. These parameters are controlled by the gain adjustment to ensure that proper voltage output is attained. The Azimuth Offset and Gain Adjustment procedures are contained within the following paragraph, followed by the Elevation Offset and Gain Adjustment procedure in paragraph 6-6.30.3.2 .

6-6.30.3.1 Azimuth D/A Converter Adjustment

**WARNING**

High voltages are present in or near this equipment when energized. Death on contact may result if personnel fail to observe proper safety procedures.

1. At the RDA Maintenance Panel UD5A2, set the Pedestal Electronics Power switch to **OFF**.
2. At the front of the DCU, remove the screws along each side using a Phillips screwdriver. Set screws aside.

**CAUTION**

Unit is heavy. Do not attempt to force unit beyond slide stops.

3. Pull slide-mounted DCU Drawer UD5A6 forward until slide stops engage.
4. Remove screws securing top cover with proper screwdriver and remove cover.
5. At the rear of UD5 cabinet, locate the Pedestal Power Amplifier UD5A7 at the bottom of rack. Remove cable UD5A7J3 (azimuth and elevation motor drives).
6. At the RDA Maintenance Panel UD5A2, set the Pedestal Electronics Power switch to **ON**.
7. At the RDA System Console, bring up the RDASOT program by entering the following:

| Step | Operator Action | System Response/Comments |
|---|---|---|
| a. | **RDASOT<Return>** | RDASOT Main Menu (Mode Selection Menu for Redundant sites) is displayed. |
| b. | **1<Return>**<br>Redundant sites only | To select FULL mode for this procedure at Redundant sites. |

| Step | Operator Action | System Response/Comments |
|---|---|---|
| c. | **4<Return>** | To select Manual Control and Display Menu. |
| d. | **1<Return>** | To select Control Pedestal; the PEDMCD Function Selection Menu will appear. |
| e. | **3<Return>** | To select Pedestal Manual Control; the Pedestal Values and Pedestal Manual Control Menu will appear. |

**NOTE**

Record the azimuth and elevation positions.

| Step | Operator Action | System Response/Comments |
|---|---|---|
| f. | **1<Return>** | To select Command Azimuth Position. |

**NOTE**

In the following step, if your sites position indicates 0°, this can also be interpreted as 360°. Therefore, current AZ POS - 50.0 can be equated to 360 - 50 = 310°. The RDASOT program will not take -50° as an input (0° - 50° = -50°).

| Step | Operator Action | System Response/Comments |
|---|---|---|
| g. | **AZ POS -5Ø.Ø<Return>** | Current azimuth position noted in step 7.e. minus 50.0 degrees. |

**NOTE**

In the following steps, RDASOT may display position feedback errors due to cable 5A7J3 being disconnected. Disregard these error messages. **Wait** for the Pedestal Values screen to be displayed before proceeding or additional error messages will be displayed.

**ESD** **CAUTION** **ESD**

All WSR-88D circuit cards are electrostatic sensitive devices which require special handling. Ensure the wrist strap is properly worn and attached to cabinet chassis prior to making any adjustments. Also, when connecting test equipment for measurement, ensure proper ESD procedures are followed.

**NOTE**

UD5A6A1J12 referenced in the following steps is the empty 40 pin chip socket located in the center of the Analog Board. See Figure 6-84.

8. Using a Fluke 8060A or equivalent digital multimeter, measure the voltage from UD5A6A1J12-30 to UD5A6A1J12-37 (Signal Ground). See Figure 6-84.

9. Adjust UD5A6A1R6 (AZ Offset) so that the reading is -10.00 ±.01 Vdc.

10. At the RDA System Console, command AZ position to current azimuth position recorded in step 7.e plus 50.0 degrees by entering the following:

| Step | Operator Action | System Response/Comments |
|---|---|---|
| a. | **Ø** or **TERM<Return>** | To terminate AZ position; the Manual Control and Display Menu appears. |
| b. | **1<Return>** | To select Control Pedestal; the PEDMCD Function Selection Menu will appear. |
| c. | **3<Return>** | To select Pedestal Manual Control; the Pedestal Manual Control Menu will appear. |
| d. | **1<Return>** | To select Command Azimuth Position. |
| e. | **AZ POS + 5Ø.Ø<Return>** | Current azimuth position noted in step 7.e. plus 50.0 degrees. |

**NOTE**

In the following steps, RDASOT may display position feedback errors due to cable 5A7J3 being disconnected. Disregard these error messages. **Wait** for the Pedestal Values screen to be displayed before proceeding or additional error messages will be displayed.

11. With the digital multimeter connected between UD5A6A1J12-30 and J12-37 (Signal Ground), adjust UD5A6A1R5 (AZ Gain) so that the reading is +10.00 ±.01 Vdc.

12. At the RDA System Console, enter the following:

| Step | Operator Action | System Response/Comments |
|---|---|---|
| a. | **Ø** or **TERM<Return>** | To terminate AZ position; the Manual Control and Display Menu appears. |
| b. | **1<Return>** | To select Control Pedestal; the PEDMCD Function Selection Menu will appear. |
| c. | **3<Return>** | To select Pedestal Manual Control; the Pedestal Manual Control Menu will appear. |
| d. | **1<Return>** | To select Command Azimuth Position. |
| e. | **AZ POS *step 7.e* <Return>** | To command antenna to actual pedestal position noted in step 7.e. |

13. With the digital multimeter connected between UD5A6A1J12-30 and J12-37, adjust UD5A6A1R6 (AZ Offset) so that the reading is 0.00 ±.01 Vdc.

**NOTE**

To prevent the display of errors on the maintenance terminal, return RDASOT to the Manual Control and Display Menu prior to turning the Pedestal Electronics Power switch to **OFF**.

14. At the RDA System Console, enter **Ø<Return>** twice to back up to the Manual Control and Display Menu.

15. When the adjustments are complete, at the RDA Maintenance Panel UD5A2, set the Pedestal Electronics Power switch to **OFF**.

16. At the rear of the UD5 cabinet, reconnect cable UD5A7J3.

17. At the RDA Maintenance Panel UD5A2, set the Pedestal Electronics Power switch to **ON**.

18. Continue with next paragraph to check/adjust the Elevation D/A Converter.

6-6.30.3.2 Elevation D/A Converter Adjustment.

**WARNING**

High voltages are present in or near this equipment when energized. Death on contact may result if personnel fail to observe proper safety procedures.

1. At the RDA System Console, return to the Pedestal Manual Control Menu, if not done previously, and set up RDASOT to command the antenna to move in elevation by entering the following:

| Step | Operator Action | System Response/Comments |
|---|---|---|
| a. | **1<Return>** | To select Control Pedestal; the PEDMCD Function Selection Menu will appear. |
| b. | **3<Return>** | To select Pedestal Manual Control; the Pedestal Manual Control Menu will appear. |
| c. | **2<Return>** | To select Command Elevation Position. |
| d. | **5Ø.Ø<Return>** | Positions antenna to an EL position of +50.0 degrees; the Pedestal Manual Control Menu will appear. |

**NOTE**

To prevent the display of errors on the maintenance terminal, return RDASOT to the Manual Control and Display Menu prior to turning the Pedestal Electronics Power switch to **OFF**.

| Step | Operator Action | System Response/Comments |
|---|---|---|
| e. | **Ø<Return>** twice | To return to Manual Control and Display Menu. |

2. When the antenna reaches a position of 50.0 degrees, set the Pedestal Electronics Power switch at the RDA Maintenance Panel UD5A2 to **OFF**.
3. At the rear of UD5 cabinet, locate the Pedestal Power Amplifier UD5A7 at the bottom of rack. Remove cable UD5A7J3 (azimuth and elevation motor drives).
4. At the RDA Maintenance Panel UD5A2, set the Pedestal Electronics Power switch to **ON**.
5. At the RDA System Console, command EL position to 0.0 degrees by entering the following at the Manual Control and Display Menu:

| Step | Operator Action | System Response/Comments |
|---|---|---|
| a. | **1<Return>** | To select Control Pedestal; the PEDMCD Function Selection Menu will appear. |
| b. | **3<Return>** | To select Pedestal Manual Control; the Pedestal Manual Control Menu will appear. |

| Step | Operator Action | System Response/Comments |
|---|---|---|
| c. | **2<Return>** | To select Command Elevation Position. |
| d. | **Ø.Ø<Return>** | To command EL position of 0.0 degrees. |

****ESD** CAUTION **ESD****

All WSR-88D circuit cards are electrostatic sensitive devices which require special handling. Ensure the wrist strap is properly worn and attached to cabinet chassis prior to making any adjustments. Also, when connecting test equipment for measurement, ensure proper ESD procedures are followed.

**NOTES**

UD5A6A1J12 referenced in the following steps is the empty 40 pin chip socket located in the center of the Analog Board. See Figure 6-84.

In the following steps, RDASOT may display position feedback errors due to cable 5A7J3 being disconnected. Disregard these error messages. **Wait** for the Pedestal Values screen to be displayed before proceeding or additional error messages will be displayed.

6. Using a Fluke 8060A or equivalent digital multimeter, measure the voltage from UD5A6A1J12-29 to UD5A6A1J12-37 (Signal Ground). See Figure 6-84.
7. Adjust UD5A6A1R8 (EL Offset) so that the reading is -10.00 ±.01 Vdc.
8. At the RDA System Console, enter **Ø<Return>** to back up to the Manual Control and Display Menu.
9. At the RDA Maintenance Panel UD5A2, set the Pedestal Electronics Power switch to **OFF**.
10. At the rear of the UD5 cabinet, reconnect cable UD5A7J3.
11. At the RDA Maintenance Panel UD5A2, set the Pedestal Electronics Power switch to **ON**.
12. Repeat the appropriate substeps of step 5 to command EL position to 0.0 degrees.
13. At the RDA System Console, enter **Ø<Return>** twice to back up to the Manual Control and Display Menu.
14. At the RDA Maintenance Panel UD5A2, set the Pedestal Electronics Power switch to **OFF**.

15. At the rear of the UD5 cabinet, disconnect cable UD5A7J3.

16. At the RDA Maintenance Panel UD5A2, set the Pedestal Electronics Power switch to **ON**.

17. Repeat the appropriate substeps of step 1 to command EL position to 50.0 degrees.

**NOTES**

In the following steps, RDASOT may display position feedback errors due to cable 5A7J3 being disconnected. Disregard these error messages. **Wait** for the Pedestal Values screen to be displayed before proceeding or additional error messages will be displayed.

18. With the digital multimeter connected between UD5A6A1J12-29 and J12-37 (Signal Ground), adjust UD5A6A1R7 (EL Gain) so that the reading is +10.00 ±.01 Vdc.

19. At the RDA System Console, enter **Ø<Return>** to back up to the Manual Control and Display Menu.

20. At the RDA Maintenance Panel UD5A2, set the Pedestal Electronics Power switch to **OFF**.

21. At the rear of the UD5 cabinet, reconnect cable UD5A7J3.

22. At the RDA Maintenance Panel UD5A2, set the Pedestal Electronics Power switch to **ON**.

23. Repeat the appropriate substeps of step 5 to command EL position to 0.0 degrees.

24. Adjust UD5A6A1R8 (EL Offset) slightly if the elevation position is not within 0 ± 0.04 degrees as viewed on the Maintenance Terminal, under Pedestal Values. To update the Pedestal Values, perform the following at the RDA System Console:

| Step | Operator Action | System Response/Comments |
|---|---|---|
| a. | **5<Return>** | To select Display Rate and Position; the Pedestal Manual Control Menu appears. |
| b. | **<Return>** | To continue displaying the rate and position data. |
| c. | **Ø<Return>** | To stop displaying position data and return to Pedestal Manual Control Menu. |

25. At the RDA System Console, command EL position to +5.0 degrees by entering the following:

| Step | Operator Action | System Response/Comments |
|---|---|---|
| a. | **2<Return>** | To select Command Elevation Position. |
| b. | **5.Ø<Return>** | Positions antenna to an EL position of +5.0 degrees. |
| c. | **Ø<Return>** | To stop displaying position data and return to Pedestal Manual Control Menu. |

26. Adjust UD5A6A1R8 (EL Offset) so that the antenna position is +5.00 ±0.04 degrees as viewed on the Maintenance Terminal, under Pedestal Values. To update the Pedestal Values, perform the following at the RDA System Console:

| Step | Operator Action | System Response/Comments |
|---|---|---|
| a. | **5<Return>** | To select Display Rate and Position; the Pedestal Manual Control Menu appears. |
| b. | **<Return>** | To continue displaying the rate and position data. |
| c. | **Ø<Return>** | To stop displaying position data and return to Pedestal Manual Control Menu. |

27. Continue with commanding elevation position between 0 and +5.00 degrees and adjusting UD5A6A1R8 (EL Offset) until the best compromise is reached between reported positions of 0.00 and +5.00 degrees elevation.

28. Proceed to paragraph 6-6.30.4 , if performing the AZ and EL Tachometer adjustments.

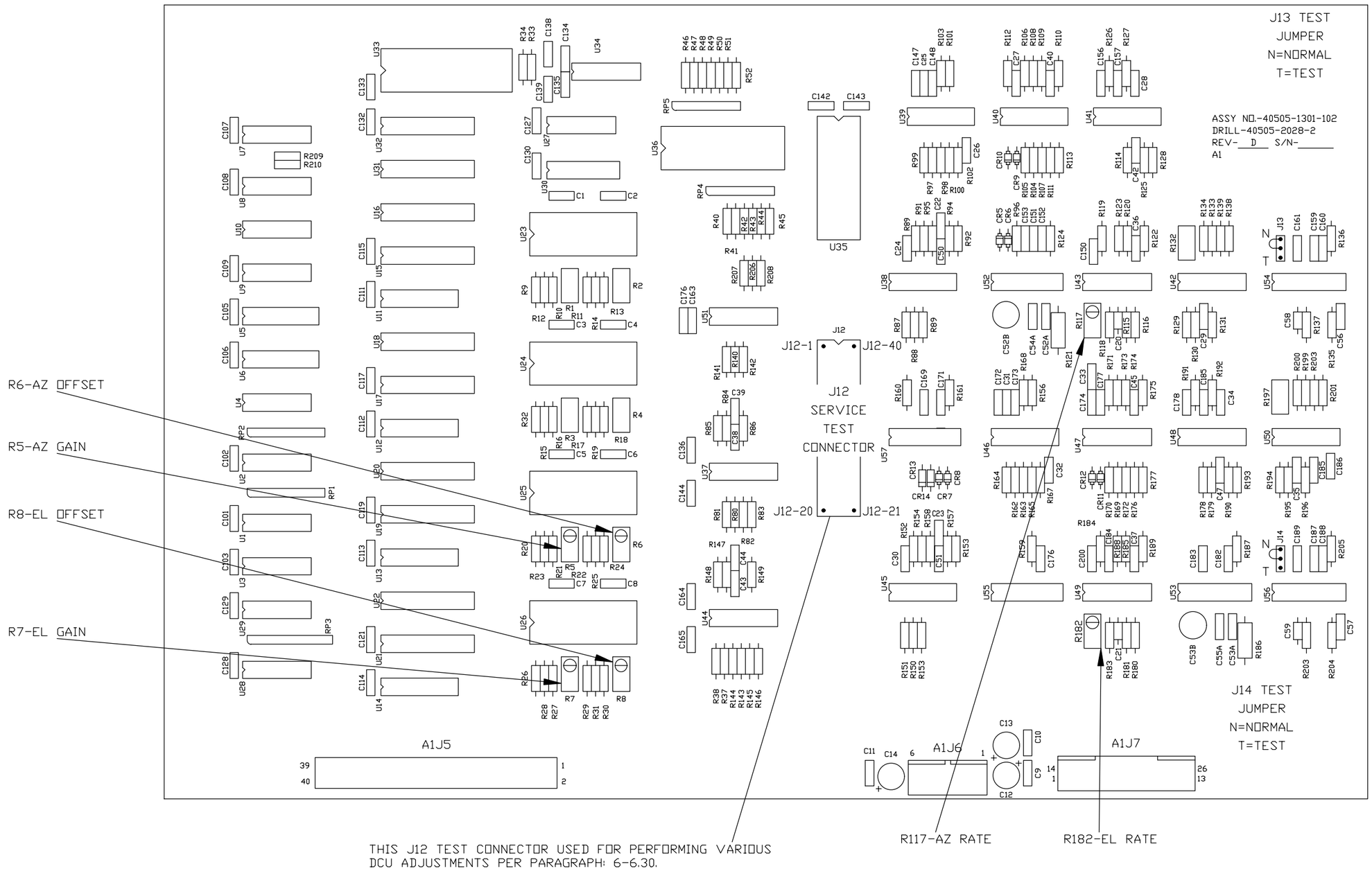


Figure 6-84. DCU Analog PWA UD5A6A1 ▮

6-6.30.4 DCU UD5A6A1 Tachometer Adjustments. It is necessary to adjust the AZ and EL Tachometer potentiometers on the DCU Analog Board UD5A6A1 so that the antenna motion matches the commanded rate ±1 percent. The Azimuth Tachometer Adjustment procedure is contained within the following paragraph, followed by the Elevation Tachometer Adjustment procedure in paragraph 6-6.30.4.2.

6-6.30.4.1 AZ Tachometer Adjustment.

1. If the RDA operational program has not been terminated, terminate the program by entering **TERP<Tab>** ***password*** **<Return>** at the RDA Applications Terminal command and parameter lines.

2. If the DCU Drawer UD5A6 is already pulled out and cover removed, **proceed to step 8**, otherwise continue with next step.

**WARNING**

High voltages are present in or near this equipment when energized. Death on contact may result if personnel fail to observe proper safety procedures.

3. At the RDA Maintenance Panel UD5A2, set the Pedestal Electronics Power switch to **OFF**.

4. At the front of the DCU, remove the screws along each side using a Phillips screwdriver. Set screws aside.

**CAUTION**

Unit is heavy. Do not attempt to force unit beyond slide stops.

5. Pull slide-mounted DCU Drawer UD5A6 forward until slide stops engage.

6. Remove screws securing top cover with proper screwdriver and remove cover.

7. At the RDA Maintenance Panel UD5A2, set the Pedestal Electronics Power switch to **ON**.

8. At the RDA System Console, bring up the RDASOT program by entering the following:

| Step | Operator Action | System Response/Comments |
|---|---|---|
| a. | **RDASOT<Return>** | RDASOT Main Menu (Mode Selection Menu for Redundant sites) is displayed. |
| b. | **1<Return>**<br>Redundant sites only | To select FULL mode for this procedure at Redundant sites. |

| Step | Operator Action | System Response/Comments |
|---|---|---|
| c. | **4<Return>** | To select Manual Control and Display Menu. |
| d. | **1<Return>** | To select Control Pedestal; the PEDMCD Function Selection Menu will appear. |
| e. | **3<Return>** | To select Pedestal Manual Control; the Pedestal Manual Control Menu will appear. |
| f. | **2<Return>** | To select Command Elevation Position. |
| g. | **Ø<Return>** | To command Elevation position to 0 degrees; the Pedestal Manual Control Menu will appear. |
| h. | **3<Return>** | To select Command Azimuth Rate. |
| i. | **1Ø<Return>** | To command an azimuth rate of 10°/sec. |

**NOTE**

The antenna should now be increasing its azimuth angle at a rate of 10 degrees per second.

| Step | Operator Action | System Response/Comments |
|---|---|---|
| j. | **5<Return>** | To select Display Rate and Position. |

9. Note the azimuth rate displayed on the terminal screen.
10. Press **<Return>** key every 1 second to get 10 displays of the average azimuth rate.
11. If the azimuth rate is not 10 ±0.1 deg/sec, adjust UD5A6A1R117 until the azimuth rate is 10 ±0.1 deg/sec. See Figure 6-84. Otherwise proceed to step 13.
12. Repeat steps 10 and 11 until the average azimuth rate is 10 ±0.1 deg/sec.
13. Stop the azimuth antenna rotation by performing the following steps before continuing with next paragraph to check/adjust the Elevation Tachometer:

| Step | Operator Action | System Response/Comments |
|---|---|---|
| a. | **Ø<Return>** | To stop displaying rate data and return to Pedestal Manual Control Menu. |

| Step | Operator Action | System Response/Comments |
|---|---|---|
| b. | **3<Return>** | To select Command Azimuth Rate. |
| c. | **Ø<Return>** | To command an azimuth rate of 0°/sec which stops the antenna rotation. |

6-6.30.4.2 EL Tachometer Adjustment.

**NOTE**

The following steps assume the previous paragraph, AZ Tachometer Adjustment, was performed and RDASOT has been initiated and is setup to continue from the Pedestal Manual Control Menu. If not, refer to paragraph 6-6.30.4.1 , steps 1 through 8 to setup DCU Drawer UD5A6 for adjustment.

1. At the RDA System Console, position the antenna to 0 degrees in both azimuth and elevation and provide an elevation rate of 2°/sec by entering the following:

| Step | Operator Action | System Response/Comments |
|---|---|---|
| a. | **1<Return>** | To select Command Azimuth Position. |
| b. | **Ø<Return>** | To command azimuth position to 0 degrees; the Pedestal Manual Control Menu will appear. |
| c. | **2<Return>** | To select Command Elevation Position. |
| d. | **Ø<Return>** | To command elevation position to 0 degrees; the Pedestal Manual Control Menu will appear. |
| e. | **4<Return>** | To select Command Elevation Rate. |
| f. | **2<Return>** | To command an elevation rate of 2°/sec. |

**NOTES**

The antenna should now be changing in elevation at a rate of 2 degrees per second. There are approximately 61 degrees of elevation travel between the inner limit stops.

When one of the stops is encountered, the RDASOT program will automatically reverse the elevation drive so that the antenna moves

between the inner limit switches until commanded by the RDASOT operator to cease driving.

| Step | Operator Action | System Response/Comments |
|---|---|---|
| g. | **5<Return>** | To select Display Rate and Position. |

2. Note the elevation rate displayed on the terminal screen.
3. Press **<Return>** key every 1 second to get 10 displays of the average elevation rate.
4. If the elevation rate is not 2 ±0.02 deg/sec, adjust UD5A6A1R182 until the elevation rate is 2 ±0.02 deg/sec. See Figure 6-84 for location of R182. Otherwise proceed to step 6.
5. Repeat steps 3 and 4 until the average elevation rate is 2 ±0.02 deg/sec.
6. Terminate the RDASOT program by entering a series of **Ø<Return>** at the RDA System Console.
7. At the RDA Maintenance Panel UD5A2, set the Pedestal Electronics Power switch to **OFF**.
8. Install the DCU top cover and tighten screws with proper screwdriver.
9. Disengage stops on either side of unit and push slide-mounted DCU Drawer UD5A6 forward to its normal operating position.
10. At the front of the DCU, install the screws along each side using a Phillips screwdriver.
11. At the RDA Maintenance Panel UD5A2, set the Pedestal Electronics Power switch to **ON**.
12. At the RDA System Console, enter **RDAUP<Return>** to load operational program.
13. Press the **<Shift>** and **<Port>** keys **simultaneously** to access the Applications Terminal.
14. At the Applications Terminal command line, enter **OPER<Return>** to place RDA in the operate mode.
15. Return system to normal operating state.

## 6-6.31 PATH LOSS MEASUREMENTS AND VALUES DETERMINED BY ALIGNMENT.

This procedure is intended for use in both single channel and redundant configurations of the RDA. In the redundant configuration, the controlling channel is connected to the antenna while the

non-controlling channel is connected to a dummy load which simulates the antenna. Most of the procedures contained herein may be performed on either the controlling or non-controlling channel. Performance of these procedures on the controlling channel will make the RDA unavailable for normal weather data gathering so it is preferable to perform them on the non-controlling channel. In a few cases involving equipment in the antenna pedestal, these procedures must be performed on the controlling channel primarily for radome access safety reasons.

In the text of the procedures and in the enclosed tables, the unit designations specified apply to the single channel configuration which is the same as Channel 2 of the redundant configuration. The following table specifies the unit designations for both channels of the redundant configuration. When performing these procedures on Channel 1 of the redundant configuration, substitute the corresponding reference designations into the procedure.

Table 6-38. Unit Designation Conversion

| Single Channel or Channel 2 of Redundant Config | Channel 1 of Redundant Config |
|---|---|
| All UD4XX | UD104XX |
| UD2A3 | UD2A7 |
| UD2A4 | UD2A8 |
| UD2A5 | UD2A9 |
| UD2W5 | UD2W14 |
| UD2W6 | UD2W15 |
| W53 | W153 |
| W54 | W154 |
| 1W61 | 1W161 |
| 1AT4 | 1AT104 |

The path loss data for the various components in the Receiver Signal Path, the Transmitted Signal Path, and the Diagnostic Test Signal Path are contained in the adaptation data files within the RDA software. When a component with an associated adaptation data parameter is replaced, it may be necessary to perform path loss measurement on the replaced component and update the current adaptation data file. The criteria and procedures for performing these measurements are contained in Section 6-5 .

6-6.31.1 Equipment and Tools Required.

1. Power Meter, HP436A or equivalent
2. Use the appropriate power sensor head and attenuation required to make the measurement.
3. Attenuator Pad, 20 dB
4. Adapter, Type N-to-SMA male

5. Adapter, Type N-to-SMA female
6. Adapter, Type N female-to-female
7. Attenuator Pad, 10 dB
8. Fixture, AGC Test (Paramax 1219229)
9. Torque Wrench, SMA

6-6.31.2 Path Loss Measurement. Table 6-39 lists the adaptable parameters that must be determined by physically making a measurement of both the input and output points.

**CAUTION**

Be sure you select a power head and attenuator for measurements which has the correct range for the "INPUT EXP PWR" from Table 6-39. Failure to use proper power head and attenuator may cause damage to the power head.

6-6.31.2.1 Procedure. The technique used for measuring path loss is as follows:

- The input signal will be provided by TESTSIG which is part of RDASOT. Refer to the RDASOT Functional Block Diagram (Figure FO6-1) for the input signals.
- Two power measurements will be made using appropriate (i.e., RF or IF) measurement equipment. The first measurement will be made by disconnecting the input to the replaced device and measuring the input power with a power meter, power sensor, and attenuator pad, if necessary. As specified in Table 6-39, this level is sometimes measured at the output of the previous module and sometimes measured at the end of the cable normally connected to the input of the device under test. The second measurement will be made with the input connected to the replaced device and the output terminating in the power measuring equipment. The path loss is the measured output minus the input.
- Table 6-39 contains the information necessary to perform these measurements.

It is necessary to understand the headings of Table 6-39 in order to properly execute the path loss measurement. An explanation of each heading follows:

- ADAPT PARA - Under this heading is listed the Receiver (Rxx) adaptation parameter associated with the pertinent path loss measurement.
- NAME OF P/L - The name of the path loss. This is an abbreviated version of the description displayed when the appropriate adaptation data file is displayed on RDA MMI terminal.
- INPUT - The input to the device whose path loss is being measured.
- OUTPUT - The output of the device.
- TEST SOURCE - The test stimulus as controlled by TESTSIG.

- INJ PNT - The point as controlled by TESTSIG where the input signal is applied. ANT means the signal is injected into the Receiver Protector in the Antenna Pedestal; CAB indicates the signal is injected into the Receiver Cabinet at UD4DC2.
- TEST ATTN/PRF - The amount of attenuation as controlled by TESTSIG which is inserted in the Test Attenuator UD4A23. Where PRF is specified, it is primarily used to determine the input expected power level or for converting to a peak power reading based on a duty cycle.
- PAD/ADAPT INPUT, OUTPUT - The appropriate combination of attenuator pad and adapter to interface between the point to be measured and the power sensor. Only one end of the adapter is specified; the other end is assumed to be type N female (necessary for connecting the power sensor). Since a power meter measurement must be made for both the input and output, the appropriate adapter for both measurements are specified.
- FREQ - The frequency of the measured point. RF requires use of power sensor and attenuator in the 2 to 3 GHz region. IF requires use of equipment in the 55 to 60 MHz region.
- INPUT EXP PWR dBm - Approximate level of power at input to the device being measured. This is not provided as a criteria; rather, it is provided to be able to select an appropriate power sensor to use for the input measurement. Determine expected gain/loss in the LRU being measured to determine appropriate power sensor to use for the output measurement.

6-6.31.2.2 Example. Assume that the Coax Delay Line UD4A7 has been replaced and as stated in paragraph 6-5.10.3, RDASOT Receiver diagnostics subtests 14, 15, and 16 are run. If subtests 14 and 15 fail while 16 passes, it will be necessary to perform the R91 (PL_A7) path loss measurement and update the Current Adaptation File for the replaced component. To perform the R91 path loss measurement, proceed as follows:

1. Place RDA in local control and terminate RDA applications software by performing paragraph 6-6.15.3, steps 1 and 2.
2. At the RDA System Console, bring up the RDASOT TESTSIG program and use CW as the test signal source by performing the following steps; at the * prompt enter:

| Step | Operator Action | System Response/Comments |
|---|---|---|
| a. | **RDASOT<Return>** | RDASOT Main Menu (Mode Selection Menu for Redundant sites) is displayed. |
| b. | **1** or **2<Return>** Redundant sites only | Either FULL or LIMITED mode may be used for this procedure at Redundant sites. |

| Step | Operator Action | System Response/Comments |
|---|---|---|
| c. | **4<Return>** | To select Manual Control and Display Menu. |
| d. | **2<Return>** | To select Control RCVR/Signal Proc; the TESTSIG Source Selection Menu will be displayed. |
| e. | **5<Return>** | To select CW Source; CW Source Control Menu is displayed. |
| f. | **2<Return>** only if RCVR Injection Point is not Cabinet | To toggle RCVR Injection Point to **Cabinet** (refer to Table 6-39 for path loss measured); CW Source Control Menu is again displayed. |
| g. | **6<Return>** only if Receiver Protector is **not** ON | To toggle Receiver Protector to **ON**; CW Source Control Menu is again displayed. |
| h. | **4<Return>** | To select Test Attenuation. `Enter the new RF Test Attenuation Value (0...103 dB)` is displayed. |
| i. | **Ø<Return>** | To select 0 dB attenuation per Table 6-39; CW Source Control Menu is again displayed. |

**CAUTION**

When removing semirigid coax from a unit, it may be necessary to loosen or remove the other end of the coax in order not to damage the unit and/or the coax.

3. Remove cable 4W202 from UD4A6J2, the output of the matched bandpass filter.
4. From Table 6-39, note that the signal to be measured is IF (i.e., 55 to 60 MHz) and that no attenuator pad is required to connect the power meter and sensor to UD4A6J2 and that the expected power is +2 dBm. Connect the appropriate measurement apparatus.
5. At the CW Source Control Menu, enter **1<Return>** to apply the test signal.
6. Note the power meter reading and record as INPUT.
7. Remove the power measurement apparatus and reconnect cable 4W202 to UD4A6J2.
8. Remove cable 4W205 from UD4A7J2 and connect power measuring equipment to UD4A7J2.

9. Note the power meter reading and record as OUTPUT.
10. Calculate the R91 (PL_A7) path loss as OUTPUT minus INPUT.
11. Remove power measuring equipment; reconnect cable 4W205 to UD4A7J2.
12. Enter a series of **Ø<Return>** to exit RDASOT.
13. Bring up the RDA by entering **RDAUP<Return>** at the RDA System Console.
14. Press the **<Shift>** and **<Port>** keys **simultaneously** to access the RDA Applications Terminal.
15. When Main Menu appears on Applications Terminal, update R91 in Current Adaptation File by performing paragraph 6-6.29 .

6-6.31.3 RIOS Path Loss Measurement. Table 6-40 lists the adaptable parameters that must be determined by physically making a measurement of the input point but using the Receiver Input/Output Select (RIOS) functionality under RDASOT TESTSIG to determine an output.

**CAUTION**

Be sure you select a power head and attenuator for measurements which has the correct range for the "INPUT EXP PWR" from Table 6-40. Failure to use proper power head and attenuator may cause damage to the power head.

6-6.31.3.1 Procedure. The technique used for measuring path loss is as follows:

- The input signal will be provided by TESTSIG which is part of RDASOT. Refer to the RDASOT Functional Block Diagram (Figure FO6-1) for the input signals.
- The input measurement will be made using appropriate (i.e., RF or IF) measurement equipment. This measurement will be made by disconnecting the input to the replaced device and measuring the input power with a power meter, power sensor, and attenuator pad, if necessary. As specified in Table 6-40, this level is sometimes measured at the output of the previous module and sometimes measured at the end of the cable normally connected to the input of the device under test.

  The output measurement will be made with the input connected to the replaced device and then using the RIOS functionality to determine an output level specified to a test jack for the test path in question. The path loss is the RIOS measured value minus the physically measured input value.
- Table 6-40 contains the information necessary to perform these measurements.

  It is necessary to understand the headings of Table 6-40 in order to properly execute the path loss measurement. An explanation of each heading follows:

  - ADAPT PARA - Under this heading is listed the Receiver (Rxx) adaptation parameter associated with the pertinent path loss measurement.
  - NAME OF P/L - The name of the path loss. This is an abbreviated version of the description displayed when the appropriate adaptation data file is displayed on RDA MMI terminal.

- INPUT - The input to the device whose path loss is being measured.
- RIOS OUTPUT - The specific test jack selected using the RIOS functionality.
- TEST SOURCE - The test stimulus as controlled by TESTSIG.
- INJ PNT - The point as controlled by TESTSIG where the input signal is applied. ANT means the signal is injected into the Receiver Protector in the Antenna Pedestal; CAB indicates the signal is injected into the Receiver Cabinet at UD4DC2.
- TEST ATTN/PRF - The amount of attenuation as controlled by TESTSIG which is inserted in the Test Attenuator UD4A23. Where PRF is specified, it is primarily used to determine the input expected power level or for converting to a peak power reading based on a duty cycle.
- PAD/ADAPT - The appropriate combination of attenuator pad and adapter to interface between the point to be measured and the power sensor. Only one end of the adapter is specified; the other end is assumed to be type N female (necessary for connecting the power sensor). For RIOS measured path losses, this column is only pertinent to the input measurement since that is the only physical measurement made.
- FREQ - The frequency of the measured input point. RF requires use of power sensor and attenuator in the 2 to 3 GHz region. IF requires use of equipment in the 55 to 60 MHz region.
- INPUT EXP PWR dBm - Approximate level of power at input to the device being measured. This is not provided as a criteria; rather, it is provided to be able to select an appropriate power sensor to use for the input measurement.

6-6.31.3.2 Example. Assume that the IF Attenuator Assembly UD4A8 has been replaced and as stated in paragraph 6-5.1 1.3 step 10.b, RDASOT Receiver diagnostics subtest 14 fails. If subtest 14 fails, it will be necessary to perform the R93 (PL_A8J1_3) path loss measurement and update the Current Adaptation File for the replaced component. To perform the R93 path loss measurement, proceed as follows:

1. Place RDA in local control and terminate RDA applications software by performing paragraph 6-6.15.3 , steps 1 and 2.

2. At the RDA System Console, bring up the RDASOT TESTSIG program and use CW as the test signal source by performing the following steps; at the * prompt enter:

| Step | Operator Action | System Response/Comments |
|---|---|---|
| a. | **RDASOT<Return>** | RDASOT Main Menu (Mode Selection Menu for Redundant sites) is displayed. |
| b. | **1** or **2<Return>**<br>Redundant sites only | Either FULL or LIMITED mode may be used for this procedure at Redundant sites. |
| c. | **4<Return>** | To select Manual Control and Display Menu. |
| d. | **2<Return>** | To select Control RCVR/Signal Proc; the TESTSIG Source Selection Menu will be displayed. |
| e. | **5<Return>** | To select CW Source; CW Source Control Menu is displayed. |
| f. | **2<Return>**<br>only if RCVR Injection Point is not Cabinet | To toggle RCVR Injection Point to **Cabinet** (refer to Table 6-40 for path loss measured; CW Source Control Menu is again displayed. |
| g. | **6<Return>**<br>only if Receiver Protector is **not** ON | To toggle Receiver Protector to **ON**; CW Source Control Menu is again displayed. |
| h. | **4<Return>** | To select Test Attenuation. `Enter the new RF Test Attenuation Value (0...103 dB)` is displayed. |
| i. | **Ø<Return>** | To select 0 dB attenuation per Table 6-40; CW Source Control Menu is again displayed. |

3. Remove cable 4W205 from UD4A7J2, the output of the Coax Delay Line.

4. From Table 6-40 note that the signal to be measured is IF (i.e., 55 to 60 MHz) and that no attenuator pad is required to connect the power meter and sensor to 4A7J2, and that the expected power is -4 dBm. Connect the appropriate measurement apparatus.

5. At the CW Source Control Menu, enter **1<Return>** to apply the test signal.

6. Note the power meter reading and record as INPUT.

7. Remove the power measurement apparatus and reconnect cable 4W205 to UD4A7J2.

8. At the RDASOT TESTSIG program, return to the CW Source Control Menu and select the RIOS function to monitor the detected IF at A8J3 by performing the following steps; at the * prompt enter:

| Step | Operator Action | System Response/Comments |
|---|---|---|
| a. | **<Return>** | To return to the CW Source Control Menu. |
| b. | **3<Return>** | To select RCVR Interface Output Select; the Receiver Interface Output Select (RIOS) menu appears. |
| c. | **8<Return>** | To select RF/IF Test Monitor Output; the Receiver Test Select (RTS) Menu appears. |
| d. | **2<Return>** | To select Detected IF (per Table 6-40); the Detected IF Selection Menu appears. |
| e. | **9<Return>** | To select A8J3 - AGC Attenuator Input Test Jack; CW Source Control Menu is displayed. If the selection point is not on page 1, enter **1<Return>** to view page 2 of the RF or IF Selection Menu. |
| f. | **1<Return>** | To select Inject Signal. |

9. RIOS will return the system measured value for the AGC Attenuator Input Test Jack A8J3. This is the output value for the path loss. The path loss is the RIOS measured value minus the physically measured INPUT value (step 6).

10. Enter a series of **Ø<Return>** to exit RDASOT.

11. Bring up the RDA by entering **RDAUP<Return>** at the RDA System Console.

12. Press the **<Shift>** and **<Port>** keys **simultaneously** to access the RDA Applications Terminal.

13. When Main Menu appears on Applications Terminal, update R93 in Current Adaptation File by performing paragraph 6-6.29 .

6-6.31.4 Alignment Procedures. Table 6-41 contains those adaptable parameters which must be measured in accordance with specific alignment procedures.

Table 6-39. Path Loss Measurement

| ADAPT PARA | NAME OF P/L | PATH LOSS = OUTPUT - INPUT INPUT | OUTPUT | TEST SOURCE | INJ PNT | TEST ATTN/PRF | PAD/ADAPT INPUT,OUTPUT | FREQ | INPUT EXP PWR dBm |
|---|---|---|---|---|---|---|---|---|---|
| R52 | PL_A20J1_4 | 4AT33OUT | 4J25 | KLY OUT | N/A | PRF5 | SMA(F), N/A | RF | +15 |
| R60[1] | PL_A22J4_5 | 4W111P2 (A25J1) | 4W112P2 (A23J1) | NOISE[1] | N/A | N/A | N/A, SMA(F) | RF | -10 |
| R69[3,7] | PL_W53 | 4W104P2 (4J16) | 2W5P2 | CW | ANT | 5 | N(F),N(F) | RF | + 7 |
| R67 | PL_A24J1_3 | 4W113P1 (4A24J1) | 4A24J3 | CW | CAB | 0 | SMA(F),SMA(M) | RF | +15 |
| R72+R73 [3,7] | PL_2A3J3/ 2A7J3 | 2W5P2 | Passive Diode Limiter Output | CW | ANT | 5 | N(F),N(F) | RF | + 3 |
| R73 [2,3,7] | PL_2A3J1_2/ 2A7J1_2 | 2A3J1 | Passive Diode Limiter Output | CW | ANT | 15 | W/G to N Mode Adapter, N(F) | RF | - 7 |
| R74[3,7] | PL_2A4J1_2 | 2A1A3FL1Out (BANDPASS FILTER) | 2A4J2 | CW | ANT | 5 | N(F), N/A | RF | -17 |
| R77[3,7] | PL_W54 | 2A4J2 | 4J15 | CW | ANT | 5 | N/A,N/A | RF | +11 |
| R78 | PL_A36 (opt) | 4J15 | 4A36OUT | CW | ANT | 0 | N/A,SMA(F) | RF | +12 |
| R80[6] | PL_DC2 | 4A24J3 | 4A4J2 | CW | CAB | 0 | SMA(M),SMA(M) | RF | +13 |
| R81 | PL_A4 | 4W100P1 (4A4J1) | 4A4J2 | CW | ANT | 10 | SMA(F),SMA(M) | RF | + 2 |
| R83[4] | PL_A5J1_3 | 4A4J2 | 4A5J3 | CW | CAB | 0 | SMA(M),SMA(M) | RF/IF | - 8 |
| R84[4] | PL_A5J1_4 | 4A4J2 | 4A5J4 | CW | CAB | 0 | SMA(M),SMA(M) | RF/IF | - 8 |
| R88 | PL_A6J1_2 | 4A5J3 | 4A6J2 | CW | CAB | 0 | SMA(M),SMA(M) | IF | +12 |
| R89 | PL_A6J1_3 | 4A5J3 | 4A6J3 | CW | CAB | 0 | SMA(M),SMA(M) | IF | +12 |
| R91 | PL_A7 | 4A6J2 | 4A7J2 | CW | CAB | 0 | SMA(M),SMA(M) | IF | + 2 |
| R92[5] | PL_A8J1_2 | 4A7J2 | 4A8J2 | CW | CAB | 0 | SMA(M),SMA(M) | IF | - 4 |
| R94[5] | PL_A9J1_2 | 4A8J2 | 4A9J2 | CW | CAB | 25 | SMA(M),SMA(M) | IF | -25 |

Table 6-39. Path Loss Measurement (continued)

| ADAPT PARA | NAME OF P/L | PATH LOSS = OUTPUT - INPUT INPUT | OUTPUT | TEST SOURCE | INJ PNT | TEST ATTN/PRF | PAD/ADAPT INPUT,OUTPUT | FREQ | INPUT EXP PWR dBm |
|---|---|---|---|---|---|---|---|---|---|
| R99 | PL_A14J1_2 | 4A5J4 | 4A14J2 | CW | CAB | 5 | SMA(M),SMA(M) | IF | -10 |
| R100 | PL_A14J1_3 | 4A5J4 | 4A14J3 | CW | CAB | 5 | SMA(M),SMA(M) | IF | -10 |
| R103[8] | PL_A15J1_2 | | | | | | | | |
| R105[8] | PL_A16J1_2 | | | | | | | | |
| R247[9] | PL_2A1A3FL1 /2 | 2W900P2 | 2A1A3FL1/2 OUT | CW | ANT | 8 | N/A | RF | 0 |
| R248[9] | PL_2W900/1 | Passive Limiter | 2W900/1 P2 | CW | ANT | 8 | N(F),N(F) | RF | 0 |

[1] Set RF Frequency Generator to site frequency (CW mode) and an output level of -10.0 dBm. This will be connected as the input test source to 4A22J4. The input power level will be that measured at the end of the test cable prior to connecting to 4A22J4. Noise Source must be selected and injected using RDASOT for the 4 Position Switch to select A22J4_5.

[2] Connect a waveguide mode adapter to the 2A3J1 flange. The input test source will be a CW test signal injected into the front end from the normal CW test source (RF Generator, receiver cabinet). Connect a short test cable to 2W5P2 (normally connected to 2A3J3). The input power level will be that level measured at the end of the test cable prior to connecting to the waveguide mode adapter. R73 equals output minus input.

[3] All five path loss values can be accomplished as part of 6-6.28.3.1 CW Test Path Calibration. If R69 or R72+R73 are measured separately and changed in adaptation data, the total CW Test Path should be reverified in accordance with paragraph 6-6.28.2.1 . R72+R73 equals measured output minus input minus R73. If CW Test Path error exceeds ±0.2 dB complete entire paragraph 6-6.28.3.1 .

[4] A5J1 is RF. A5J3 and A5J4 are IF.

[5] For R92 and R94, the AGC Test Fixture must be connected and clocked in at 0 dBm IF attenuation. For R94, ensure final gain adjustment of UD4A9 has been accomplished in accordance with paragraph 6-6.24.6 .

[6] R80 equals output minus input minus R81.

[7] Must be performed with the channel being calibrated selected as the controlling channel for radome access safety reasons.

Table 6–39. Path Loss Measurement (continued)

| ADAPT PARA | NAME OF P/L | PATH LOSS = OUTPUT – INPUT INPUT | OUTPUT | TEST SOURCE | INJ PNT | TEST ATTN/PRF | PAD/ADAPT INPUT,OUTPUT | FREQ | INPUT EXP PWR dBm |
|---|---|---|---|---|---|---|---|---|---|
| [8] | Set to –14.75 dBm in adaptation data. | | | | | | | | |
| [9] | If the path loss was measured after the cable 2W900/1 or Bandpass Filter UD2A1A3FL1/2 replacement and the R247 and R248 values are a non–zero value in Adaptation Data, then a new value for R73 must be calculated as $R73_{New} = R73_{Old} – R247$ or R248. This is required because when the cable and bandpass filter were initially installed, the path loss values (R247/R248) were included in the R73 value. Therefore, if the R247 or R248 values are non–zero and updated into Adaptation Data, then R73 must be reduced by a like amount. | | | | | | | | |

Table 6–40. RIOS Path Loss Measurement

PATH LOSS = RIOS OUTPUT – INPUT

| ADAPT PARA | NAME OF P/L | INPUT | RIOS OUTPUT | TEST SOURCE | INJ PNT | TEST ATTN/PRF | PAD/ADAPT | FREQ | INPUT EXP PWR dBm |
|---|---|---|---|---|---|---|---|---|---|
| R54[1] | PL_DC1 | AT34OUT | DC1 | KLY OUT | N/A | PRF5 | SMA(F) | RF | – 1 |
| R61[5] | PL_A22J2_6 | W60P1 | A22J6 | KLY DRV | N/A | PRF5 | N(F) | RF | – 5 |
| R62[6] | PL_A22J3_7 | A1J3 | A22J7 | CW | N/A | N/A | 10dB/SMA(M) | RF | +23 |
| R64 | PL_A23J1_3 | $W112P2_{A23J1}$ | A23J3 | CW | N/A | N/A | 10dB/SMA(F) | RF | +21 |
| R65 | PL_A23J1_4 | $W112P2_{A23J1}$ | A23J4 | CW | N/A | 0 | 10dB/SMA(F) | RF | +21 |
| R68 | PL_A24J1_4 | $W113P1_{A24J1}$ | A24J4 | CW | ANT | 0 | SMA(F) | RF | +15 |
| R85 | PL_A5J1_5 | A4J2 | A5J5 | CW | CAB | 0 | SMA(M) | RF | – 8 |
| R86[2] | PL_A5J1_7 | A4J2 | A5J7 | CW | CAB | 0 | SMA(M) | RF/IF | – 8 |
| R87 | PL_A5J2_6 | $W115P2_{A5J2}$ | A5J6 | CW | N/A | N/A | SMA(F) | RF | +14 |
| R90 | PL_A6J1_4 | A5J3 | A6J4 | CW | CAB | 0 | SMA(M) | IF | +12 |
| R93 | PL_A8J1_3 | A7J2 | A8J3 | CW | CAB | 0 | SMA(M) | IF | – 4 |
| R95[3] | PL_A9J1_3 | A8J2 | A9J3 | CW | CAB | 25 | SMA(M) | IF | –25 |
| R96[3] | PL_A9J1_4 | A8J2 | A9J4 | CW | CAB | 25 | SMA(M) | IF | –25 |
| R97[6] | PL_A10J2_3 | A1J4 | A10J3 | CW | N/A | N/A | 10dB/SMA(M) | IF | +27 |
| R101 | PL_A14J1_4 | $W211P2_{A14J1}$ | A14J4 | CW | CAB | 0 | SMA(F) | IF | +12 |
| R102 | PL_A14J1_5 | $W211P2_{A14J1}$ | A14J5 | CW | CAB | 0 | SMA(F) | IF | +12 |
| R104[4] | PL_A15J1_3 | | | | | | | | |
| R106[4] | PL_A16J1_3 | | | | | | | | |
| R107 | PL_A27 | A5J6 | $W123_{A29J1}$ | STALO | N/A | N/A | SMA(F) | RF | –14 |
| R108 | PL_A28 | $W201_{A5J7}$ | $W221_{A30J1}$ | CW | CAB | 0 | SMA(F) | IF | –8 |

Table 6-40. RIOS Path Loss Measurement (continued)

PATH LOSS = RIOS OUTPUT - INPUT

| ADAPT PARA | NAME OF P/L | INPUT | RIOS OUTPUT | TEST SOURCE | INJ PNT | TEST ATTN/PRF | PAD/ADAPT | FREQ | INPUT EXP PWR dBm |
|---|---|---|---|---|---|---|---|---|---|
| [1] | Calculate PEAK INPUT as AVER INPUT @ AT34OUT + 28.12 dB where 28.12 dB is duty cycle of the transmitted output pulse expressed in dB at PRF5(1013.5) and PW of 1.52 µs. Path loss equals RIOS measured output minus calculated peak input. | | | | | | | | |
| [2] | Actual measured input is RF. RIOS selected output will be in the IF selection menu. | | | | | | | | |
| [3] | For R95 and R96, the AGC Test Fixture must be connected and clocked in at 0 dBm IF attenuation. | | | | | | | | |
| [4] | Set to -35 dB in adaptation data. | | | | | | | | |
| [5] | W60 connects to 4J17 at the top of the receiver cabinet. At Klystron Drive Source Control Menu, select a Range Gate of 1.5 Km. Calculate PEAK INPUT as AVER INPUT @ W60P1 + 28.12 dB where 28.12 dB is the duty cycle of the RF Drive pulse (at PRF5(1013.5) and PW of 1.52 µs) expressed in dB minus 0.5 dB to compensate for cable loss to 4A22J2. Path loss equals RIOS measured output minus calculated peak input. | | | | | | | | |
| [6] | Input measured directly off of RF Generator 4A1. Input equals measured value @4A1J3 or 4A1J4 minus 0.5 dB to compensate for cable loss to 4A22J3 or 4A10J2 respectively. | | | | | | | | |

Table 6-41. Path Loss/Value Determined by Alignment Procedures

| ADAPT PARA | EHB | PARAGRAPH | STEPS | COMMENTS |
|---|---|---|---|---|
| R7 [1] | 6-510 | 6-6.28.3.5.2 | all | |
| R34,R59 | 6-510 | 6-6.28.3.1.2 | 7, 41 thru 63 | Measure together. Correction applied to R34. Do not enter values for R69, R72, R74, R63, and R77 in current Adaptation Data. In step 60, enter Ø for items not measured. |
| R35 | 6-510 | 6-6.28.3.3 | all | |
| R36,R37 | 6-51 1 | 7.8.6.6 | 10-21 | Measure separately. |
| R38,R39 | 6-510 | 6-6.23.3 | 3.a-3.g, 4.a-4.d | Measure separately. |
| R43 [1] | 6-510 | 6-6.28.2.1.6 | all | |
| R44 [1] | 6-510 | 6-6.28.3.5.3.3 | all | |
| R46 [1] | 6-510 | 6-6.28.2.1.4<br>6-6.28.2.1.5 | 44<br>34 | |
| R47 [1] | 6-510 | 6-6.28.3.5.3.2 | all | |
| R48, R49, R51 | 6-51 1 | 7.8.6.10.3 | all | Measure together. Correction applied to R49 and R51. |
| R50, R53, R55, R57 | 6-510 | 6-6.28.3.5.1.2 | all | Measure together. Correction applied to R55. |
| R56, R58 | 6-510 | 6-6.28.3.2.2 | all | Measure together. Correction applied to R56. |
| R63, R66 | 6-510 | 6-6.28.3.1.2 | 7, 39 thru 63 | Measure and correct R34 and R59 first. Measure R63, R66 together. Correction applied to R63. Do not enter values for R69, R72, R74, and R77 in Adaptation Data. In step 60, enter Ø for items not measured. |
| R42, R45, R70, R71 | | | | Set to zero (Ø) |
| R75, R76, R79, R82 | | | | Set to zero (Ø) |

Table 6-41. Path Loss/Value Determined by Alignment Procedures (continued)

| ADAPT PARA | EHB | PARAGRAPH | STEPS | COMMENTS |
|---|---|---|---|---|
| R146-R150 | 6-510 | 6-6.28.3.4 | all | |
| R163-R169 | 6-510 | 6-6.28.3.4 | all | |
| R180-R184 | 6-510 | 6-6.28.3.4 | all | |
| TR17-TR22, TR24 | 6-510 | 6-6.32.3 | all | Measure together. Correction applied to TR21. |
| TR23 | 6-51 1 | 7.8.6.10.2 | 1-15 | Measure in conjunction with TR17-TR21. Correction applied to TR23. |
| TR25 | 6-510 | 6-6.32.4 | all | |
| TR26-TR29 | 6-510 | 6-6.32.5 | all | Measure together. Correction applied to TR27. |
| TR30 | 6-510 | 6-6.32.5 | all | Measured after correction of TR26-TR29 path. |
| TR33 | 6-510 | 6-6.32.5 | all | Measured after TR30. |
| TR32 | 6-51 1 | 7.8.6.10.2 | all | |
| [1] | Must be performed on the Controlling channel of a redundant system. | | | |

## 6-6.32 WAVEGUIDE PATH LOSS MEASUREMENTS.

This procedure is intended for use in measuring waveguide path losses following replacement of any piece of the waveguide. Waveguide replacement procedures are detailed in paragraph 6-5.53. Table 6-20, Waveguide Cross Reference Index, lists each piece of the waveguide, associated adaptation parameters, and cross references to specific path loss measurements.

Each measurement section contains a listing of applicable waveguide pieces considered within that measurement, the "target" adaptation parameter being measured, and any default values used within the measurement. It is important to note that each piece of the waveguide is not measured individually. When waveguide pieces are in series, a single measurement and adaptation parameter may be used for several pieces of the waveguide. During certain measurements, some "default" adaptation parameters may be used in an equation to determine the "target" measurement value. The use of default adaptation parameters provides consistency from system to system and minimizes the need for waveguide path loss measurements.

### 6-6.32.1 Equipment and Tools Required.

1. Power Meter, HP436A or equivalent
2. Power Sensor, -30 dBm to +20 dBm, HP8481A or equivalent
3. Power Sensor, -70 dBm to -20 dBm, HP8484A, HP8481D, or equivalent
4. Signal Generator, Gigatronics Model 600, HP8648C, or equivalent
5. Wrench set, hex key
6. Nut driver set
7. Wrench set, combination
8. Waveguide Adapters, HPS281A or equivalent (see NOTE) (Qty=2)
9. Waveguide Adapter, Rectangular Flange to Type-N (see NOTE)
10. Type-N test cable
11. Type-N female-to-female Adapters (Qty=2)
12. Safety Harness
13. C-clamps (Qty=2)

**NOTE**

When performing the procedure described in paragraph 6-6.32.3, one rectangular flange adapter and one circular flange adapter is used. The rectangular flange adapter may be requisitioned from the supply system using ASN R400-SE37, NSN 5985-01-445-4605. When performing the procedures described

in paragraphs 6-6.32.4 and 6-6.32.5 , a second circular flange adapter is used. One circular flange adapter should already be on-site. A second circular flange adapter may be requisitioned from the supply system using ASN R400-3E36, NSN 4920-01-029-4624. These extra adapters are considered “Shared Support Equipment” and must be returned to the NWS supply system as if they are a repairable part when the procedure has been completed.

6-6.32.2 Initial Conditions/Preliminary Setup.

**WARNING**

Failure to perform applicable shutdown steps in Table 6-13 could cause serious injury or death.

1. Performs steps 1 through 5, 7, 8, and 9 of Table 6-13 to shut down the transmitter equipment.

**NOTE**

Step 2 is performed to ensure the W/G Switch remains in the Dummy Load position. Air will escape when waveguide is opened. This is a normal indication if waveguide is properly pressurized.

2. At the W/G Switch located above the transmitter, disconnect J1 from P1. Put a safety tag over the control panel of the transmitter.
3. Perform steps 11 and 12 of Table 6-13 to shutdown Waveguide Pressurization Unit.
4. If path loss measurements at the pedestal must be performed, complete steps 13, 14, and 15 of Table 6-13 to secure pedestal power.

**WARNING**

Failure to perform applicable antenna stow procedures detailed in paragraph 6-6.15.3 could result in serious injury of death.

5. If path loss measurements must be performed near the elevation housing, complete step 6 of paragraph 6-6.15.3 to stow the azimuth and elevation assemblies.

6-6.32.3 Measurement/Determination of TR21

This procedure is used for determining the TR21 value associated with miscellaneous waveguide pieces between the transmitter arc detector and the 1DC1/1DC101 Bi-Directional Coupler.

6-6.32.3.1 Applicable Waveguide Pieces.

The associated waveguide pieces and fixed values are as follows:

| Nomenclature | Ref. Des. | Fixed Adaptation Values |
|---|---|---|
| Arc Detector | 3A6 | TR17 -.05 |
| Miscellaneous | 1WG1 | |
| Harmonic Filter | 1WG2 | TR18 -.15 (NOTE 1) |
| Miscellaneous | 1WG3 | |
| Circulator | 1WG4 | TR19 -.15 (NOTE 1) |
| Spectrum Filter | 1WG6 | TR20 -.20 (NOTE 2) |
| Bi-Directional Coupler | 1DC1/1DC101 | TR22 -.05 |
| Waveguide Switch(es) | 1S1/1S101 | TR24 -.05 (NOTE 3) |
| Flex Waveguide | 1WG10 | |
| Miscellaneous WG - | 1WG12 | |
| (Redundant Channel | 1WG13 | |
| Number 1 only) | 1WG14 | |
| Miscellaneous WG - | 1WG15 | |
| (Redundant Channel | 1WG17 | |
| Number 2 only) | 1WG18 | |
| | 1WG19 | |

**NOTES**

1. The normal default value for TR18 and TR19 is -.15 dB. However, in some cases, these values will represent too much loss to properly calculate TR21. In those cases, TR18 and TR19 will be set to -.10 dB. See paragraph 6-6.32.3.3 .
2. TR20 will be set to 0.00 if no spectrum filter is installed.
3. TR24 will be set to -.10 for redundant systems.

6-6.32.3.2 Total Path Loss Measurement.

**WARNING**

Hazardous voltages are present within the transmitter cabinet. Under no circumstances should high-voltage areas be accessed without first shutting off power; and then following the key interlock procedure to lock-off power. Failure to comply could cause serious injury or death.

1. Remove the back panel from the center-bay of the transmitter cabinet to expose the area directly behind the klystron.
2. Locate the Arc Detector (3A6) and remove the ten screws securing the bottom flange of 3A6 to the klystron output waveguide (RF Output Waveguide Flange.) See EHB 6-511, Figure 11-21, sheet 2). Remove the piece of gasket between the waveguide pieces.

**NOTE**

Step 3 is unnecessary if a rectangular flange waveguide adapter is available.

3. Place the gasket on the flat flange of the mode adapter. Line up the inner waveguide opening of the gasket with the inner opening of the mode adapter. Trace the outline of the gasket onto the mode adapter flange. This will help to realign the mode adapter with the 3A6 flange.

**CAUTION**

Do not connect the mode adapter to the klystron. Be careful not to scratch or dent the surface of the RF Output Waveguide Flange.

4. Remove the ground strap to allow clearance for the mode adapter and connect the mode adapter to the 3A6 flange with the C-clamps so that the flange of the 3A6 lines up with the outline previously traced on the mode adapter flange. A rectangular flange waveguide adapter can be connected directly to the 3A6 flange without use of C-clamps.

5. Calibrate the power meter and HP8481A sensor per procedures in paragraph 6-6.22 .

6. Connect the N-type test cable to the RF signal generator. Set the signal generator to the site frequency. Allow time for the signal generator to stabilize. Set its output to +10 ± 0.1 dBm as measured at the end of the test cable using the HP8481A power sensor and Type-N female-to-female adapter. Record this value as $P_{IN}$ below. Avoid sharp bends of the test cable, especially near the connectors.

   $P_{In}$ = _____ dBm

7. Disconnect the flex waveguide WG10 from the waveguide piece exiting shelter.

8. Connect the second waveguide adapter (circular flange) to the output of the flex waveguide flange.

9. Remove the power sensor and adapter from the end of the test cable and connect the test cable to the Type-N connector on the mode adapter connected to 3A6.

10. Connect the HP8481A power sensor to the Type-N connector on the waveguide adapter connected to the flex waveguide WG10.

11. Record this value as $P_{OUT.}$

    $P_{Out}$ = _____ dBm

6-6.32.3.3 Calculation of TR21.

1. Total path loss equals paragraph 6-6.32.3.2 step 11 - step 6:

   $LOSS_{(Total)}$ = $P_{Out}$ - $P_{In}$

   = _____ - _____

   = _____ dBm

2. Single Channel Systems. TR21 equals:

   TR21 = $LOSS_{(Total)}$ - TR17 - TR18 - TR19 - TR20 - TR22 - TR24

   = _____ - _____ - _____ - _____ - _____ - _____ - _____

   = _____ - (-.05) - (-.15) - (-.15) - _____ - (-.05) - (-.05)

   = _____ dB

   TR20 (Spectrum Filter) will be -.20 if installed, otherwise zero (Ø). If TR21 calculates to a value greater than -.01 dB (i.e., zero or a positive value), set TR18 and TR19 to -.10 dB in adaptation data and recalculate TR21 with these new values. If TR21 still calculates to a value greater than -.01 dBm, set it to -.01 dB in adaptation data and this procedure is complete.

3. Redundant Channels. TR21 equals:

   TR21 = $LOSS_{(Total)}$ - TR17 - TR18 - TR19 - TR20 - TR22 - TR24

   = _____ - _____ - _____ - _____ - _____ - _____ - _____

   = _____ - (-.05) - (-.15) - (-.15) - _____ - (-.05) - (-.10)

   = _____ dB

   TR20 (Spectrum Filter) will be -.20 if installed, otherwise zero (Ø). If TR21 calculates to a value greater than -.01 dB (i.e., zero or a positive value), set TR18 and TR19 to -.10 dB in adaptation data and recalculate TR21 with these new values. If TR21 still calculates to a value greater than -.01 dBm, set it to -.01 dB in adaptation data and this procedure is complete.

4. Example (Redundant Channel, no spectrum filter installed):

   $P_{In}$ = 10.02 dBm
   $P_{Out}$ = 9.40 dBm

   $LOSS_{(Total)}$ = 9.40 - 10.02
   = -.62 dB

   TR21 = -.62 - (-.05) - (-.15) - (-.15) - 0 - (-.05) - (-.10)
   = -.62 + .50
   = -.12 dB

5. Correct current adaptation data per paragraph 6-6.29 .

6-6.32.4 Measurement/Determination of TR25

This procedure is used for determining the TR25 value associated with miscellaneous waveguide pieces from the transmitter waveguide switch output to the circulator within the pedestal.

6-6.32.4.1 Applicable Waveguide Pieces.

The associated waveguide pieces are as follows:

| Nomenclature | Ref. Des. |
|---|---|
| Miscellaneous WG (Tower) | WG1 through WG18 |
| Miscellaneous WG (Exiting shelter) | 1WG11 |

6-6.32.4.2 Total Path Loss Measurement.

1. Disconnect the shelter flex waveguide from the waveguide piece exiting shelter.
2. Mount the waveguide adapter on the flange of the waveguide piece exiting shelter.
3. Set the signal generator frequency to site frequency and connect the Type-N test cable to its output.
4. Calibrate an HP8481A power sensor and connect it to the end of the test cable using the Type-N, female-to-female adapter.
5. Set the signal generator output so that an indication of near 10 dBm is obtained on the power meter. Record this value as $P_{IN}$ (TR25).

   $P_{IN}$ (TR25) = _____ dBm
6. Remove the power sensor and adapter from the end of the cable and connect the test cable to the waveguide adapter Type-N connector.
7. Proceed to the tower with the following equipment and tools:
   a. Power Meter, HP436A or equivalent
   b. Power Sensor, -30 dBm to +20 dBm, HP8481A or equivalent
   c. Wrench set, hex key
   d. Nut driver set
   e. Wrench set, combination
   f. Waveguide Adapter, HP S281A or equivalent

**NOTE**

You will be entering a confined space, non-permit required. This means the confined space does not contain any atmospheric hazards capable of causing death or serious physical harm.

8. At the base of the pedestal, disconnect the waveguide piece that is connected between port 2 of the circulator and the azimuth rotary joint.
9. Connect the waveguide adapter to port 2 of the circulator.

10. Calibrate the HP8481A power sensor and connect it to the waveguide adapter Type-N connector. Record the power meter reading as $P_{OUT}$ (TR25).

    $P_{OUT}$ (TR25) = _____ dBm

6-6.32.4.3 Calculation of TR25.

1. TR25 is calculated as paragraph 6-6.32.4.2 step 10 - step 5:

2. TR25 = $P_{OUT}$ (TR25) - $P_{IN}$ (TR25)

   = _____ - _____

   = _____ dB

3. Example:

   $P_{IN}$ (TR25) = 10.02 dBm
   $P_{OUT}$ (TR25) = 8.84 dBm

   TR25 = 8.84 - 10.02
   = -1.18 dB

4. Correct current adaptation data per paragraph 6-6.29 .

6-6.32.5 Measurement/Determination of TR27, TR30, and TR33.

This procedure is used for determining the TR27 value associated with the waveguide between the pedestal circulator, the TR30 antenna power monitor coupler value, and the TR33 antenna power monitor attenuator pad value.

6-6.32.5.1 Applicable Waveguide Pieces.

The associated waveguide pieces and fixed values are as follows:

| Nomenclature | Ref. Des. | Fixed Adaptation Values |
|---|---|---|
| Miscellaneous WG (Pedestal) | 2A1WG1 through 2A1WG5 | |
| AZ Rotary Joint | 2A1A4 | TR26 -.05 |
| EL Rotary Joint | 2A1A5 | TR28 -.05 |
| Ant Power Monitor Attn. Pad | 2AT1 | |
| Ant Power Monitor Coupler Assembly | 2DC1 | TR29 -.10 (straight through) |

6-6.32.5.2 Input Power Reference.

1. At the RDA System Console, bring up the RDASOT TESTSIG program and use CW as the test signal source by performing the following steps; at the * prompt enter:

| Step | Operator Action | System Response/Comments |
|---|---|---|
| a. | **RDASOT<Return>** | RDASOT Main Menu (Mode Selection Menu for Redundant sites) is displayed. |
| b. | **1<Return>**<br>Redundant sites only | To select FULL mode for this procedure at Redundant sites. |
| c. | **4<Return>** | To select Manual Control and Display Menu. |
| d. | **2<Return>** | To select Control RCVR/Signal Proc; the TESTSIG Source Selection Menu will be displayed. |
| e. | **5<Return>** | To select CW Source; CW Source Control Menu is displayed. |
| f. | **2<Return>**<br>only if RCVR Injection Point is **not** RCVR Front End | To toggle RCVR Injection Point to **Front End**; CW Source Control Menu is again displayed. |
| g. | **4<Return>** | To select Test Attenuation.<br>`Enter the new RF Test Attenuation Value (0...103 dB)` is displayed. |
| h. | **Ø<Return>** | To select 0 dB attenuation; CW Source Control Menu is again displayed. |
| i. | **1<Return>** | To select Inject Signal. |

2. Proceed to the tower with the following equipment and tools:

   a. Power Meter, HP436A or equivalent

**NOTE**

The 25 ft. power sensor cable will be required for this procedure.

   b. Power Sensor, -30 dBm to +20 dBm, HP8481A or equivalent

   c. Power Sensor, -70 dBm to -20 dBm, HP8484A, HP8481D or equivalent

   d. Wrench set, hex key

e. Nut driver set

f. Wrench set, combination

g. Waveguide Adapters, HP S281A or equivalent (Qty=2)

h. Test cable, Type-N

i. Adapters, Type-N female-to-female (Qty=2)

**NOTE**

You will be entering a confined space, non-permit required. This means the confined space does not contain any atmospheric hazards capable of causing death or serious physical harm.

3. Disconnect the waveguide piece between port 2 of the pedestal circulator and the azimuth rotary joint.
4. Mount the waveguide adapter on the flange of the azimuth rotary joint.
5. Disconnect heliax cable 2W5 from the receiver protector J3 jack.
6. Connect the Type-N test cable to the end of cable 2W5 using a female-to-female Type-N adapter.
7. Calibrate an HP8481A power sensor with the power meter per paragraph 6-6.22 .
8. Connect the power sensor to the end of the Type-N test cable using the second Type-N female-to-female adapter. Record the value as $P_{IN}$ (PED).

   $P_{IN}$ (PED) = _____ dBm

9. Disconnect the power sensor and adapter from the end of the Type-N test cable and connect the test cable to the waveguide adapter installed on the flange of the azimuth rotary joint.

6-6.32.5.3 Output Power Measurements.

1. Proceed to the left side of the elevation assembly. Disconnect the flex waveguide piece above the antenna power monitor coupler assembly.
2. Connect the second waveguide adapter to the waveguide elbow immediately above the antenna power monitor coupler assembly.
3. Connect a calibrated HP8481A power sensor to the waveguide adapter. Record this value as $P_{OUT}$ (EL OUT).

   $P_{OUT}$ (EL OUT) = _____ dBm

4. Disconnect the waveguide adapter and reconnect the flex waveguide piece.
5. Disconnect the 2AT1 antenna power monitor attenuator, 2A5 power sensor, and cable from the antenna power monitor coupler assembly.

6. Calibrate the HP8484A (or HP8481D) power sensor to the antenna power monitor coupler assembly Type-N jack. Record this value as $P_{OUT}$ (EL COUPLER OUT).

   $P_{OUT}$ (EL COUPLER OUT) = _____ dBm

7. Disconnect the power sensor and reconnect the 2AT1 attenuator to the coupler assembly without the 2A5 power sensor and cable attached.

8. Connect the power sensor to the output of 2AT1. Record this value as $P_{OUT}$ (EL ATTENUATOR OUT).

   $P_{OUT}$ (EL ATTENUATOR OUT) = _____ dBm

6-6.32.5.4 Calculation of TR27.

1. TR27 is calculated as paragraph 6-6.32.5.3, step 3 - paragraph 6-6.32.5.2, step 8 - TR26 - TR28 - TR29 as shown below:

   TR27 = $P_{OUT}$ (EL OUT) - $P_{IN}$ (PED) - TR26 - TR28 - TR29

   = _____ - _____ - (-.05) - (-.05) - (-.10)

   = _____ - _____ + .20

   = _____ dB

2. Correct current adaptation data per paragraph 6-6.29.

6-6.32.5.5 Calculation of TR30.

1. TR30 is calculated as paragraph 6-6.32.5.3, step 6 - paragraph 6-6.32.5.2, step 8 - TR26 - TR27 - TR28 as shown below:

   TR30 = $P_{OUT}$(EL COUPLER OUT) - $P_{IN}$(PED) - TR26 - TR27 - TR28

   = _____ - _____ - (-.05) - _____ - (-.05)

   = _____ - _____ + .05 - _____ + .05

   = _____ dB

2. Correct current adaptation data per paragraph 6-6.29.

6-6.32.5.6 Calculation of TR33.

1. TR33 is calculated as paragraph 6-6.32.5.3, step 8 - paragraph 6-6.32.5.3, step 6.

   TR33 = $P_{OUT}$ (EL ATTENUATOR OUT) - $P_{OUT}$ (EL COUPLER OUT)

   = _____ - _____

   =_____ dB

2. Correct current adaptation data per paragraph 6-6.29.

6-6.32.5.7 Examples of TR27, TR30, and TR33 Calculation.

$P_{IN}$ (PED) = 8.92 dBm
$P_{OUT}$ (EL OUT) = 8.60 dBm
$P_{OUT}$ (EL COUPLER OUT) = -35.11 dBm
$P_{OUT}$ (EL ATTENUATOR OUT) = -41.15 dBm

TR27 = $P_{OUT}$ (EL OUT) - $P_{IN}$ (PED) - TR26 - TR28 - TR29

= 8.60 - 8.92 - (-.05) - (-.05) - (-.10)

= 8.60 - 8.92 + .20

= -.12 dB

TR30 = $P_{OUT}$ (EL COUPLER OUT) - $P_{IN}$ (PED) - TR26 - TR27 - TR28

= -35.11 - 8.92 - (-.05) - (-.12) - (-.05)

= -35.11 - 8.92 + .05 + .12 + .05

= -43.81 dB

TR33 = $P_{OUT}$ (EL ATTENUATOR OUT) - $P_{OUT}$ (EL COUPLER OUT)

= -41.15 - (-35.11)

= -6.04 dB

## 6-6.33 RECEIVER INTERFACE OUTPUT SELECTOR (RIOS) FUNCTIONALITY IN RDASOT.

The RIOS functionality in RDASOT receiver manual control provides the operator a quick method of tracking path losses in the receiver and is a valuable tool for tracking changes after a historical baseline is established with a known good system. For each desired area under test, the operator may select either the actual test jack output or an associated value computed back to an input or output of a module. The values computed at the module inputs/outputs are derived by adding or subtracting associated adaptation data path losses to the actual value measured at the test jack as output by the RF/IF Test Monitor UD4A31.

The RIOS functionality may not be used to actually determine the path losses in the LRUs in the Receiver channel shared path such as R81, R83, R88, R92, and R94. These measurements are depicted in Table 6-39 as having an INPUT and OUTPUT circuit designation, such as INPUT = 4A4J2; an OUTPUT = 4A5J3 for path loss R83. The RIOS functionality may be used to determine the path loss to test points such as R85. These measurements are listed in Table 6-40 and defined in paragraph 6-6.31.3 .

The following procedure provides an example of use of the RIOS functionality for making a quick estimation of a path loss within a module. Once again, these RIOS measured values cannot be used to actually determine the path loss that would go into adaptation data. It is used as a troubleshooting aid.

6-6.33.1 Equipment and Tools Required. None.

6-6.33.2 Example. The following provides an example of how the operator could use the RIOS functionality for making a quick measurement of path loss between J3 and J5 of the receiver 4-Position Switch (4A22).

1. Place RDA in local control and terminate RDA applications software by performing paragraph 6-6.15.3 , steps 1 and 2.

2. At the RDA System Console, bring up the RDASOT TESTSIG program and use CW as the test signal source by performing the following steps; at the * prompt enter:

| Step | Operator Action | System Response/Comments |
|---|---|---|
| a. | **RDASOT<Return>** | RDASOT Main Menu (Mode Selection Menu for Redundant sites) is displayed. |
| b. | **1** or **2<Return>** Redundant sites only | Either FULL or LIMITED mode may be used for this procedure at Redundant sites. |
| c. | **4<Return>** | To select Manual Control and Display Menu. |
| d. | **2<Return>** | To select Control RCVR/Signal Proc; the TESTSIG Source Selection Menu will be displayed. |
| e. | **5<Return>** | To select CW Source; CW Source Control Menu is displayed. |
| f. | **3<Return>** | To select RCVR Interface Output Select; the Receiver Interface Output Select (RIOS) menu appears. |
| g. | **8<Return>** | To select RF/IF Test Monitor Output; the Receiver Test Select (RTS) Menu appears. |
| h. | **1<Return>** | To select Detected RF; the Detected RF Selection Menu appears. |
| i. | **6<Return>** | To select A22J3 - Freq Gen RF Sample; the CW Source Control Menu is again displayed. If the selection point is not on page 1, enter **1<Return>** to view page 2 of the RF or IF Selection Menu. |

| Step | Operator Action | System Response/Comments |
|---|---|---|
| j. | **1<Return>** | To select Inject Signal. RIOS will display the power level in dB as determined to be at 4A22J3. |
| k. | **<Return>** | To return to CW Source Control Menu. |
| l. | Repeat steps j and k twice. Record value. Value = _____ | To ensure a stable power level value is returned. CW Source Control Menu is displayed. |
| m. | **3<Return>** | To select RCVR Interface Output Select; the Receiver Interface Output Select (RIOS) menu appears. |
| n. | **8<Return>** | To select RF/IF Test Monitor Output; the Receiver Test Select (RTS) Menu appears. |
| o. | **1<Return>** | To select Detected RF; the Detected RF Selection Menu appears. |
| p. | **1<Return>** | To select Page 2 of RF Selection Menu; Page 2 of Detected RF Selection Menu is displayed. |
| q. | **2<Return>** | To select A23J1 - Selected RF. This the measurement point for the output of the 4-Position Switch (with associated cable 4A23J1). CW Source Control Menu is again displayed. |
| r. | **1<Return>** | To select Inject Signal. RIOS will display the power level in dB as determined to be at 4A23J1 |
| s. | **<Return>** | To return to CW Source Control Menu. |
| t. | Repeat steps r and s twice. Record value. Value = _____ | To ensure a stable power level value is returned. |

3. The difference in values returned in steps l and t reflect the path loss of the 4-Position Switch between jacks J3 and J5 (with associated cable to 4A23J1). This value is nominally about -2 dB (receiver Adaptation Data value R59).

6-6.34 STATMUX UD105A20 (PENRIL VCX-150) SETUP PROCEDURE.

The Statistical Multiplexer UD105A20 is setup via PORT 1 using the Remote RDA Maintenance Terminal UD32A1. The setup procedure is as follows.

6-6.34.1 Equipment and Tools Required.

1. Screwdriver set, flat-tip
2. Screwdriver set, Phillips-tip

6-6.34.2 Initial Conditions/Preliminary Setup.

1. Turn the power ON/OFF switch on the rear of the STATMUX UD32A3 to **OFF**.
2. Using the proper screwdriver, remove the cable from PORT 1 of the STATMUX UD32A3 and connect it to PORT 1 of the replacement STATMUX for UD105A20.
3. Plug in the power cord of the replacement STATMUX UD105A20.

6-6.34.3 STATMUX Setup Procedure.

1. The terminal UD32A1 configuration is different than the configuration needed to configure the STATMUX UD105A20. Modify the terminal UD32A1 setting by performing the following:

**NOTE**

STATMUX UD105A20 converts most upper case entries to lower case. For clarity, ensure all entries are made in lower case.

| Step | Operator Action | System Response/Comments |
|---|---|---|
| a. | Press **<Shift>** and **<Setup>** keys **simultaneously** until the setup menu appears. | Setup menu appears. |
| b. | Press **<F1>** key. | Quick setup menu appears. |
| c. | Press **<Space>** until VT-100 is highlighted. | `VT-100` is highlighted |
| d. | Press **<Down>** and **<Right>** arrow keys until EIA FORMAT DATA field is highlighted. | `EIA FORMAT DATA` field is highlighted. |
| e. | Press **<Space>** until 8/1/N is highlighted. | `8/1/N` is highlighted. |
| f. | Press **<F14>** key. | The message `Save all? (Y/N)` appears. |
| g. | Press **Y<Return>**. | This exits the Setup Menu. |

2. Turn STATMUX UD105A20 rear panel power switch **ON**, if power has not been previously turned on.

3. A button must be used to set the STATMUX UD105A20 to the default configuration. Press the button that is located in the lower right hand corner of STATMUX UD105A20. To reach the button, remove the STATMUX's front panel by holding either side of the front panel and pulling the panel directly toward you. Press the button while toggling power on the STATMUX and keep it depressed for at least 20 seconds after power is on.

4. Enter the following at the Maintenance Terminal UD32A1 to change the terminal characteristics to make it compatible with the STATMUX as follows:

| Step | Operator Action | System Response/Comments |
|---|---|---|
| a. | Press **<Return>** until `Connect to` prompt appears. | `Connect to` prompt appears. |
| b. | **set<Return>** | The Set Terminal Characteristics menu appears as shown in Figure 6-85. |
| c. | **3<Return>** | To select Character length; the Change Character Length options appear. |
| d. | **3<Return>** | Selects character length to be 7 bits; the Set Terminal Characteristics menu appears. |
| e. | **4<Return>** | To select Parity; the Change Parity options appear. |
| f. | **3<Return>** | Selects the parity to be even; the Set Terminal Characteristics menu appears. |
| g. | **7<Return>** | To select Terminal type; the Change Terminal Type menu appears. |
| h. | **25<Return>** | Selects Perkin Elmer 1251/1245 Super Owl terminal (closest terminal configuration to Concurrent 6312 setup); the Set Terminal Characteristics menu appears. |

| Step | Operator Action | System Response/Comments |
|---|---|---|
| | **NOTES**<br><br>Due to differences in STATMUX firmware versions, some display menu selections or prompts will vary between models.<br><br><CR> is the same as <Return>. | |
| i. | **15** or **16<Return>** | To select Apply Changes; `SET YOUR TERMINAL, THEN ENTER <CR>` is displayed. |

5. Change the configuration of Maintenance Terminal UD32A1 back to the previous configuration as follows:

| Step | Operator Action | System Response/Comments |
|---|---|---|
| a. | Press **<Ctrl>** and **<F3>** keys **simultaneously** until the Setup Configuration menu appears. | Setup Configuration menu appears. |
| b. | Press **<Space>** until 6312 is highlighted. | 6312 is highlighted. |
| c. | Press **<↓>** and **<→>** arrow keys until EIA FORMAT DATA field is highlighted. | EIA FORMAT DATA field is highlighted. |
| d. | Press **<Space>** until 7/1/E is highlighted. | 7/1/E is highlighted. |
| e. | Press **<F14>** key. | The message `Save all? (Y/N)` appears. |
| f. | Press **y<Return>**. | This exits the Setup menu. |
| g. | Press **<Return>**. | The Set Terminal Characteristics menu appears. |
| h. | Enter **1<Return>**. | `Connect to:` prompt appears. |
| i. | Enter **configure<Return>**. | The First Configuration Service Submenu is displayed as shown in Figure 6-86. |

6. Initialize module and enter global configuration as follows:

| Step | Operator Action | System Response/Comments |
|---|---|---|
| a. | **2<Return>** | To select INITIALIZE configuration storage. `Are you sure you want to INITIALIZE entire module (y/n)? n.` prompt is displayed. |
| b. | **y<Return>** | The First Configuration Service Submenu is displayed. |
| c. | **1<Return>** | To select ADD/MODIFY configurations, user lists or texts; the Level II Configuration menu appears, as shown in Figure 6-87. |
| d. | **1<Return>** | To select ADD a new configuration; `New configuration name:` prompt appears. |
| e. | **rdaside<Return>** | The Global Parameter Form menu appears as shown in Figure 6-88. The prompt `Description:` appears. |
| f. | **rdaside<Return>** | The prompt `Installation Name:` appears. |
| g. | **rdaside<Return>** | The prompt `Connect prompt:` appears. |
| h. | **rdaside<Return>** | The prompt `Default Access Rights:` appears. |
| i. | **<Return>** | The prompt `Logging port:` appears. |
| j. | **<Return>** | The prompt `Logging enabled:` appears. |
| k. | **<Return>** | The prompt `Binary output:` appears. |
| l. | **1<Return>** | The prompt `Logging mask:` appears. |
| m. | **<Return>** | The prompt `Modem network mgr port:` appears. |
| n. | **<Return>** | The prompt `addr:` appears. |

| Step | Operator Action | System Response/Comments |
|---|---|---|
| o. | **<Return>** | The prompt `IOK log message timer:` appears. |
| p. | **<Return>** | The prompt `Node name:` appears. |
| q. | **<Return>** | The prompt `User list name:` appears. |
| r. | **<Return>** | The prompt `Local time zone:` appears. |

**NOTE**

The number corresponding to the local time zone for Eastern time zone during daylight savings time is 4, because Eastern time zone is 4 hours behind Greenwich mean time (GMT).

| Step | Operator Action | System Response/Comments |
|---|---|---|
| s. | ***number corresponding to local time zone*** **<Return>** | The prompt `Hours:` appears. |

**NOTE**

Local hour for Eastern time zone when it is midnight Greenwich mean time (GMT) is 20 because Eastern time zone is 4 hours before midnight GMT.

| Step | Operator Action | System Response/Comments |
|---|---|---|
| t. | ***number corresponding to local hour when it is midnight GMT*** **<Return>** | The prompt `Minutes:` appears. |
| u. | **<Return>** | The prompt `Display format:` appears. |
| v. | **<Return>** | The prompt `Queue length threshold:` appears. |
| w. | **<Return>** | The Level II Configuration menu appears. See Figure 6-87. |
| x. | **4<Return>** | The following message appears: `Configuration, user list or text name: rdaside`. |

| Step | Operator Action | System Response/Comments |
|---|---|---|
| y. | **<Return>** | The Second Configuration Added to Form menu appears as shown in Figure 6-89. |
| z. | **1<Return>** | The prompt `New entry name:` appears. |

**** Set Terminal Characteristics ****

| | | Current | Requested |
|---|---|---|---|
| 1. | Exit | | |
| 2. | Baud rate | 9600 | 9600 |
| 3. | Character length | 8 bits | 8 bits |
| 4. | Parity | None | None |
| 5. | Stop bits | 1 stop bit | 1 stop bit |
| 6. | Echo | CPU & VCX services | CPU & VCX services |
| 7. | Terminal type | Unsupported | Unsupported |
| 8. | Device flow control | XON/XOFF | XON/XOFF |
| 9. | Port flow control | XON/XOFF | XON/XOFF |
| 10. | Messages | All | All |
| 11. | Break key | Ignore | Ignore |
| 12. | Control state key | ^@ | ^@ |
| 13. | Control hold key | ^@ | ^@ |
| 14. | Broadcast option | Accept routine | Accept routine |
| 15. | Apply changes | | |

Enter selection:

NX2220

Figure 6-85. Set Terminal Characteristics Menu

1) ADD/MODIFY configurations, user lists or texts
2) INITIALIZE configuration storage

Enter selection [or ESC to exit]:

NX2221

Figure 6-86. First Configuration Service Submenu

```
No configurations defined.

   1) ADD a new configuration
   2) ADD a new user list
   3) ADD a new text
   4) EXAMINE/MODIFY a configuration, user list or text
   5) DELETE a configuration, user list or text
   6) LIST existing configurations, user lists and texts
   7) SELECT configuration to run

Enter selection [or ESC to exit]:
                                                                    NX2222
```

Figure 6-87. Level II Configuration Menu

```
Config:                                                  [10/64 used]
                    Description: >
              Installation name:
               Connect prompt:
         Default Access Rights:
                  Logging port:
                 Logging card: No                  Binary output:No        Logging mask:
      Modem network mgr port: 1
                         addr: Ø
       1ØK log message timer:
                   Node name:
                User list name:
               Local time zone:
                   Local time when it is midnight Greenwich Mean time
                        Hours: Ø                   Minutes:ØØ
                Display format: U.S. (mm/dd/yy hh:mm:ss)
        Queue length threshold: 3Ø
----<CR>=next    field----^E=previous    field----ESC=accept    screen----

Description:
                                                                    NX2223
```

Figure 6-88. Global Parameters Form Menu

```
Name      Type                          Brief Description

No names defined

    1) ADD new name(s)
    2) EXAMINE/MODIFY a name
    3) DELETE a name
    4) LIST existing names
    5) EXAMINE/MODIFY global configuration parameters
    6) MERGE all names with those from another configuration
Enter selection [or ESC to exit]:
                                                              NX2224
```

Figure 6-89. Second Configuration Added to Form Menu

7. Enter the following port names and parameters as follows:

**NOTE**

Due to differences in STATMUX firmware versions, some display menu selections or prompts will vary between models. Firmware version 2.8.4 or higher has new or additional selections. Operators should follow the display prompts and locate the appropriate data input step and proceed from that point.

| Step | Operator Action | System Response/Comments |
|---|---|---|
| a. | **rsc1<Return>** * | The Name Type Form menu is displayed, as shown in Figure 6-90. The `Name type:` prompt appears. |
| b. | **1<Return>** | The Asynchronous Lines Main Form menu is displayed. The prompt `Starting port:` appears. |
| c. | **1<Return>** * | This selects rsc1 as the starting port. The prompt `Ending port:` appears. |
| d. | **1<Return>** * | This selects rsc1 as the ending port. The prompt `Baud rate:` appears. |
| e. | **12<Return>** | This selects 9600 as baud rate. The prompt `Character length:` appears. |
| f. | **2<Return>** | This selects 7 bits as the character length. The prompt `Stop bits:` appears. |

| Step | Operator Action | System Response/Comments |
|---|---|---|
| g. | **1<Return>** | This selects 1 bit as the stop bit. The prompt `Parity:` appears. |
| h. | **3<Return>** | This selects even parity. The prompt `Escape delay:` appears. |
| i. | **1<Return>** | The prompt `Attachment control:` appears. |
| j. | **1<Return>** | This number is specific to rsc1. The prompt `Device flow control:` appears. |
| k. | **2<Return>** | This selects XON/XOFF as the device flow control. The prompt `Port flow control:` appears. |
| l. | **2<Return>** | This selects XON/XOFF as the port flow control. The prompt `Timeout (mins):` appears. |
| m. | **Ø<Return>** | This selects a timeout of zero. The prompt `Timeout direction:` appears. |
| n. | **1<Return>** | This selects receive. The prompt `Direction:` appears. |
| o. | **1<Return>** | The prompt `Answer access rights:` appears. |
| p. | **<Return>** | The prompt `Password override:` appears. |
| q. | **1<Return>** | The prompt `Answer attachment string name:` appears. |
| r. | **<Return>** | The prompt `Answer detachment string name:` appears. |
| s. | **<Return>** | The prompt `Answer disconnect string:` appears. |
| t. | **<Return>** | The prompt `New entry name:` appears. |

8. Repeat step 7 for all the port names listed in Table 6-42. The parameters marked with an asterisk (*) in step 7 (a, c, and d) should be substituted with the parameters associated with each port name listed in Table 6-42.

9. The last name to be entered is the trunk name. Enter the following starting at the `New entry name:` prompt:

| Step | Operator Action | System Response/Comments |
|---|---|---|
| a. | **1<Return>** | The Name Type Form menu is displayed. |
| b. | **2<Return>** | The Trunk Line Main Form menu displays `port:`. |
| c. | **1<Return>** | The prompt `Port view, clocking:` appears. |
| d. | **1<Return>** | The prompt `Baud rate:` appears. |
| e. | **5<Return>** | The prompt `Virtual circuits:` appears. |
| f. | **1Ø<Return>** | The prompt `Multiplexing protocol:` appears. |
| g. | **1<Return>** | The prompt `Login required:` appears. |
| h. | **1<Return>** | The prompt `Trunk Timeout (secs):` appears. |
| i. | **6Ø<Return>** | The prompt `Utilization Threshold:` appears. |
| j. | **75<Return>** | The prompt `Retransmission Threshold:` appears. |
| k. | **25<Return>** | The prompt `Statistics Logging Timer:` appears. |
| l. | **Ø<Return>** | The prompt `Answer access rights:` appears. |
| m. | **<Return>** | The prompt `Password override:` appears. |
| n. | **1<Return>** | The prompt `Originate access rights:` appears. |
| o. | **<Return>** | The prompt `New entry name:` appears. |

| Step | Operator Action | System Response/Comments |
|---|---|---|
| p. | **<Return>** | The Second Configuration Added to Form menu appears. |
| q. | **<Ctrl>** and **[** keys **simultaneously** | The Level II Configuration menu is displayed. |
| r. | **7<Return>** | This selects SELECT configuration to run. The prompt `Select the configuration to run: rdaside` appears. |
| s. | **<Return>** | The Level II Configuration menu is displayed. |
| t. | **<Ctrl>** and **[** keys **simultaneously**. | The First Configuration Service submenu is displayed. |

10. Toggle power on back of STATMUX UD105A20.

11. Replace front panel of STATMUX.

12. Remove the cable from PORT 1 of the replacement STATMUX UD105A20. Reconnect the cable to Port 1 of STATMUX UD32A1 and place the power ON/OFF switch in the **ON** position.

Table 6-42. Port Name and Parameters

| Port Name | Starting Port | Ending Port |
|---|---|---|
| rac1 | 2 | 2 |
| rsc2 | 3 | 3 |
| rac2 | 4 | 4 |

```
Config: ucpside                    Name: usc1      [5/64 used]
              Name type:>Asynchronous line(s)  (Slot 1)
                ----<CR>=next field----^E=previous field----ESC=accept screen----

1) Asynchronous line(s)      (Slot 1)      5) Services, controlled access
2) Trunk Line                (Slot 2)      6) X.2 port                    (Slot 2)
3) Speed connect                           7) String
4) Group

Name type:
                                                                        NX2225
```

Figure 6-90. Name Type Form Menu

6-6.35 STANDALONE DIAL PORT MODEM (CODEX 3261) UD105A21 SETUP PROCEDURE.

This procedure requires one technician and takes 0.5 hours.

6-6.35.1 Equipment and Tools Required. None.

6-6.35.2 Initial Conditions/Preliminary Setup. Ensure the system is in normal operating mode. At the front panel buttons (shown as they appear when facing the front panel), perform the following functions:

Return key - when pressed within a branch of the menu, changes the Liquid Crystal Display (LCD) to the branch title screen (e.g. **TERMINAL OPT'S**). When pressed at a branch title screen, changes the LCD to the home screen (e.g. **DATA 9600 T/D?)**

Down key - moves from branch to branch from the main menu and selects individual setting options within the branches.

Across key - moves the screen along the branches of the modem menu tree. It also will move the cursor across data entry menus one character (or digit) at a time (e.g. S-Reg menus).

Enter key - selects the item displayed on the LCD as the current setting (if the screen displayed an = sign, it was already the current setting), or initiates an action (as in Reinit Memory?).

6-6.35.3 Procedure. If the modem being installed is not a new modem, the modem panel must be unlocked with the password procedure in paragraph 6-6.35.3.1 below. A new modem may be directly setup or a programmed modem that has been unlocked may be set using the setup procedure in paragraph 6-6.35.3.2 . The modem settings may be checked, but not altered, without entering the password. Paragraph 6-6.35.3.3 should be utilized to lock the modem after procedures have been performed. Finally, paragraph 6-6.35.3.4 contains the menu listing of all of the front panel menus showing how they should appear after the modem has been set correctly.

6-6.35.3.1 Modem Password Entry (unlocking) Procedure. Perform the following to unlock the modem panel.

**NOTE**

The modem will return to password protected state if no key is depressed for 30 seconds. If this occurs before all changes are completed, the following steps will have to be performed again.

1. Press the key twice (ensures beginning from the home screen).
2. Press the key until the display reads **FP SECURITY**
3. Press the key until the display reads **Enter Password?**
4. Press the key, the display reads **ENTER PW:ØØØØ**

5. Press the ▼ key to change each digit of the password and the ▶ key to move to each successive digit of the four from left to right. When ready, the display should read **ENTER PW:1111**

6. Press the ◎ key, the display reads **Passwd Unlocked**

7. Press the ◪ key, the display reads **Disconnect T/D?**

6-6.35.3.2 Setup Procedure.

1. Press the ◪ key twice (ensures beginning from the home screen).

2. Press the ▶ key until the display reads **Reinit Memory?**

3. Press the ◎ key once, the display reads **Reinit All Mem?**

4. Press the ◎ key again, the display reads **3261 Initial**

5. Press the ◪ key, the display reads **Disconnect T/D?**

6. Press the ▶ key until the display reads **Select Options = 1**

7. Press the ▼ key until the display reads **Select Options:3**

8. Press the ◎ key, the display reads **Select Complete!**

9. Press the ▶ key until the display reads **Power Up In = Old**

10. Press the ▼ key until the display reads **Power Up In:3**

11. Press the ◎ key, the display reads **Power Up In = 3**

12. Press the ▶ key until the display reads **Enter Phone # = 1**

13. Press the ◎ key, the display reads

14. Press the ▼ key to select each digit of the phone number of the remote modem (UD32A4) and the ▶ key to move to each successive digit from left to right. For example, **123-4567**

15. Press the ◎ key, the display reads **Enter Phone # = 1**

16. Press the ◪ key, the display reads **Disconnect T/D?**

**NOTE**

The phone number entered is verified by selecting the **View Phone # = 1** menu in steps 17 and 18.

17. Press the ▶ key until the display reads **View Phone # = 1**

18. Press the ◎ key, the display reads xxx-**xxxx** (where xxx-xxxx is the phone number that was input in step 14)

19. Press the key, the display reads **Disconnect T/D?**
20. Press the key until the display reads **MODULATION OPT'S**
21. Press the key, the display reads **Line = 2W Lease**
22. Press the key until the display reads **Line:Dial**
23. Press the key, the display reads **Line = Dial**
24. Press the key, the display reads **Min Rate = 300**
25. Press the key until the display reads **Min Rate:4800**
26. Press the key, the display reads **Min Rate = 4800**
27. Press the key, the display reads **Mode = Originate**
28. Press the key until the display reads **Mode:Answer**
29. Press the key, the display reads **Mode = Answer**
30. Press the key, the display reads **Longspace = Off**
31. Press the key until the display reads **Longspace:On**
32. Press the key, the display reads **Longspace = On**
33. Press the key, the display reads **MODULATION OPT'S**
34. Press the key until the display reads **EC/DC OPT'S**
35. Press the key, the display reads **Mode = Direct**
36. Press the key, the display reads **Mode:Normal**
37. Press the key, the display reads **Mode = Normal**
38. Press the key, the display reads **EC/DC OPT'S**
39. Press the key, the display reads **ACU OPT'S**
40. Press the key until the display reads **Answer = Manual**
41. Press the key until the display reads **Answer:Ring #2**
42. Press the key, the display reads **Answer = Ring #2**
43. Press the key, the display reads **ACU OPT'S**
44. Press the key, the display reads **TERMINAL OPT'S**

45. Press the ▶ key, the display reads **DTE Rate = 14.4**
46. Press the ▼ key until the display reads **DTE Rate:9600**
47. Press the ◎ key, the display reads **DTE Rate = 9600**
48. Press the ▶ key until the display reads **DCD Loss Dis = S10**
49. Press the ▼ key until the display reads **DCD Loss Dis:7 s**
50. Press the ◎ key, the display reads **DCD Loss Dis = 7 s**
51. Press the ▶ key until the display reads **Inactivity = S30**
52. Press the ▼ key until the display reads **Inactivity:3min**
53. Press the ◎ key, the display reads **Inactivity = 3min**
54. Press the ◪ key, the display reads **TERMINAL OPT'S**

**NOTE**

Steps 55 through 59 should only be performed at sites with "programmable" vs. "permissive" telephone jacks. This may include sites that have their systems connected to PBXs. This setting affects the output power level of the modem on the phone line. Setting RJ11C on a "programmable" line will result in too much power being output on the phone line. With a PBX connection, the normal output level of -9 dBm may be too "hot". Most of the systems in the WSR-88D program have the "permissive" system, and should be set to RJ11C. This information is provided for those sites that are exceptions. For sites with PBXs, if your equipment is connected to a PBX rather than a direct outside line, and connection problems are being experienced at your site, RJ45S may be a better setting. There is no other option setting for these modems that affects output dial line power level.

55. Press the ▼ key, the display reads **TELCO OPT'S**
56. Press the ▶ key, the display reads **Telco = RJ11C**
57. Press the ▼ key, the display reads **Telco:RJ45S**
58. Press the ◎ key, the display reads **Telco = RJ45S**
59. Press the ◪ key, the display reads **TELCO OPT'S**
60. Press the ▼ key until the display reads **DIALING OPT'S**

61. Press the ▶ key until the display reads **Dial = Tone**
62. Press the ▼ key until the display reads **Dial:Auto**
63. Press the ◎ key, the display reads **Dial = Auto**
64. Press the ◪ key, the display reads **TELCO OPTS**
65. Press the ▼ key, the display reads **FP SECURITY**
66. Press the ▶ key until the display reads **Password = Disable**
67. Press the ▼ key until the display reads **Password:Enable**
68. Press the ◎ key, the display reads **Password = Enable**
69. Press the ▶ key until the display reads **Change Password**
70. Press the ◎ key, and wait until the display reads **Old PW: ØØØØ**
71. Press the ▼ key to select each digit of the password and the ▶ key to move to each successive digit of the four from left to right. The factory default password is ØØØØ
72. Press the ◎ key, and wait until the display reads **New PW: ØØØØ**
73. Press the ▼ key to select each digit of the password and the ▶ key to move to each successive digit of the four from left to right. The new password should be set to the WSR-88D standard 1111. When ready, the display should read **New PW:1111**
74. Press the ◎ key, and wait until the display reads **Verify PW: ØØØØ**
75. Press the ▼ key to select each digit of the password and the ▶ key to move to each successive digit of the four from left to right. When ready, the display should read **Verify PW:1111**
76. Press the ◎ key, and wait until the display reads **Password Saved!**
77. Press the ◪ key, the display reads **FP SECURITY**
78. Press the ▼ key, the display reads **ACCESS SECURITY**
79. Press the ▶ key until the display reads **PW Verify = Dis**
80. Press the ▼ key until the display reads **PW Verify:Intern**
81. Press the ◎ key, the display reads **PW Verify = Intern**
82. Press the ▶ key, the display reads **Callback = Off**
83. Press the ▼ key until the display reads **Callback:Intrn 1**
84. Press the ◎ key until the display reads **Callback = Intrn 1**

85. Press the key, the display reads **Rmt Num Rqrd = Off**

86. Press the key until the display reads **Rmt Num Rqrd:On**

87. Press the key until the display reads **Rmt Num Rqrd = On**

88. Press the key until the display reads **Enter Group PW?**

89. Press the key, and wait until the display reads **GPW:**

90. Press the key to change each character of the password and the key to move to each successive character of the four from left to right. The Group Telephone Number password is assigned by the user. Any four letters are acceptable. This same password is used in the Standalone Dial Port Modem UD32A4 setting procedure in NWS EHB 6-525. **RECORD THIS PASSWORD!**

91. Press the key, and wait until the display reads **Group PW Saved!**

92. Press the key until the display reads **Tone = None**

93. Press the key until the display reads **Tone:Ack Only**

94. Press the key, the display reads **Tone = Ack Only**

95. Press the key twice, the display reads **Disconnect T/D?**

96. Press the key until the display reads **Save Changes = 3**

97. Press the key, and wait until the display reads **Save Completed!**

98. Press the key twice, the display reads **Disconnect T/D?**

6-6.35.3.3 Modem Password Entry (locking) Procedure. Perform the following steps to lock the modem front panel.

1. Press the key twice (ensures beginning from the home screen).

2. Press the key until the display reads **FP SECURITY**

3. Press the key until the display reads **Set Protection?**

4. Press the key, the display reads **Passwd Protected**

5. Press the key, the display reads **Disconnect T/D?**

6-6.35.3.4 Menu Listing.

Following are the settings listed by branch option menu. Some technicians may find this quicker to use than the preceding procedure. The listing may also be used as a quick reference for verifying that the modems are set up correctly. All settings that are changed from the default values for Option Set 3 are underlined.

**TEST OPTIONS**

Test = End Test (unless test is running)
Accept RDL = On
LAL Busy Out = Off

**MODULATION OPTIONS**

Line = Dial
Mod = V32bis Auto
Auto Type = CCITT
Low Speed = Bell
Max Rate = 14.4
Min Rate = 48ØØ
Fast Call = Off
AdaptiveRate = On
Mode = Answer
Clock = Internal
Retrain = High BER
Longspace = On
PSTN = On
Guard Tone = Off

**RESTORAL OPTIONS**

HoldDialine = Off

**EC/DC OPTIONS**

Mode = Normal
Buffers = Regular*
EC = V.42
DC = Enabled
Break = Destruct
Modem Flow = On
Delay = Off
EC ID = Default

**TERMINAL OPTIONS**

DTE Rate = 96ØØ
Flow = XON/XOFF
Speed Conver = On
DTR = 1Ø8.2
RTS = Normal
CTS = Normal
RtsCts Delay = Ø
DCD = Normal
RemRTS/DCD = Codex
DCD Loss Dis = 7 s
DSR = Normal
Overspeed = 1%
DTR Delay = S25
DTE Ct 14Ø = Off
DTE Ct 141 = Off
DTE Pin 25 = Test
Ext Select = Off

- - - - -

* May not appear on all modems due to differences in firmware revision levels.

**EC/DC OPTIONS**

**ACU OPTIONS**

ACU Select = V25b
AT Form = Async
V25Form = Bitsync
NoACU Form = Sync
Default Dial = Off
Answer = Ring #2
Async Echo = On
Char Length = 1Ø
V25 Char = ASCII
Sync Idle = Char
V25Resp = V25bis
Parity = V25 bis
AT msg = Before CD
RsltCode = Enable
RsltForm = Verbose
Con Msg = DTE Rate*
Rel Msg = Off
LPDA2 Addr = FF
LPDA2 ID = 326x
LPDA2 Det = Enab
Call Progress = 4

**ACCESS SECURITY OPTIONS**

PW Verify = Intern
Callback = Intrn 1
Rmt Num Rqrd = On
Enter Group PW?
Group PW = Disable
Tone = Ack Only
Sim Ring = Disable
DialRstrct = Off
Speed Conver = On
Ext Cntrl = Pin 14
Inactivity = 3min

**TELCO OPTIONS**

Telco = RJ11C/RJ45S (see text)
LL Tx Level = Ø
Line Compen = Off*
Speaker = Dialing
Volume = Medium
Netwrk Comp = Off*

**DIALING OPTIONS**

Pause Delay = 3
Dial Wait = 2
Dial = Auto
Call Timeout = 6Ø
Blind Dial = S6
Pulse Cycle = 4Ø%
Tone Length = 72

**FP SECURITY OPTIONS**

Enter Password?
Password = Enable
Set Protection?
Change Password?

**REMOTE CONFIGURATION OPTIONS**

Init Rmt Cnfg?
Rmt Acc = Enable

**SET REMOTE LEASED LINE ADDRESS**

New Address = ØØØ
Rmt Ser# = ØØØØØØ
RmtNest Modem = No
'Enter' To Set

- - - - -

* May not appear on all modems due to differences in firmware revision levels.

**ACCESS SECURITY OPTIONS**

**NETWORK CONTROL OPTIONS**

OverrideMode = Off
NC Address = ØØØ
NC PortRate = 75
Pass Thru = Opt 1

**REMOTE CONFIGURATION OPTIONS**

**SEARCH REMOTE LEASED LINE ADDRESS**

Rmt Ser# = ØØØØØØ
RmtNest Modem = No
'Enter' To Srch

- - - - -

* May not appear on all modems due to differences in firmware revision levels.

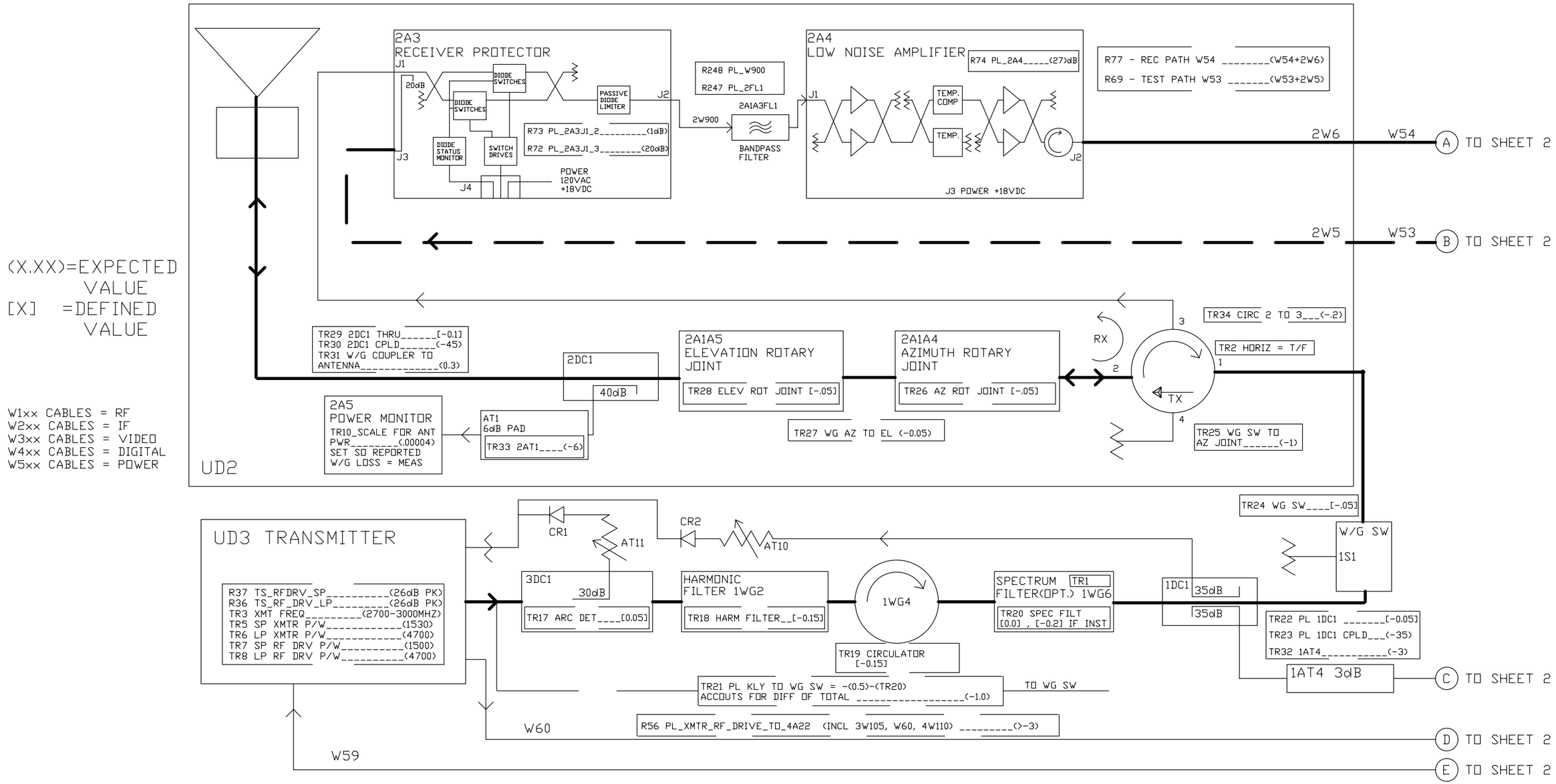


Figure FO6-1. Adaptation Data Functional Block Diagram (Sheet 1 of 2)

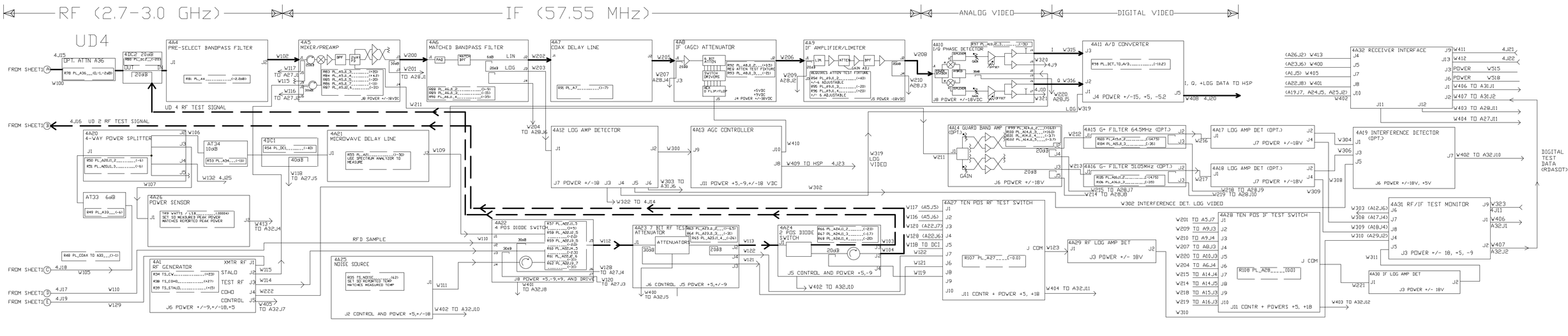


Figure FO6-1. Adaptation Data Functional Block Diagram
(Sheet 2 of 2)

# CHAPTER 7

# REFERENCE DATA

## Section 7-1. Introduction

7-1.1 GENERAL.

Chapter 7 contains system interface diagrams, interconnection cabling diagrams, cable wiring data, and power distribution diagrams. The data in this chapter is provided to support wiring and cable troubleshooting by means of point-to-point continuity testing. This chapter contains information for several configurations, therefore not all the information is applicable.

**NOTE**

This chapter and its corresponding sections refer to the RDA Data Processor as UD5, the Receiver as UD4, the Transmitter as UD3, and the Waveguide Pressurization Unit as UD6. Unless otherwise specified, the information also applies to redundant systems UD105, UD104, UD103, and UD106.

7-1.2 CHAPTER ORGANIZATION.

Chapter 7 is organized into three sections as follows:

- Section 7-1 Introduction System Interface Diagrams and Interconnection Cabling Diagrams (ICDs)
- Section 7-2 Cable Wiring Data
- Section 7-3 Power Distribution Diagrams (PPDs)

7-1.3 SYSTEM INTERFACE DIAGRAMS AND INTERCONNECTION CABLING DIAGRAMS.

This section provides System Interface Diagrams and Interconnection Cabling Diagrams (ICDs). Table 7-1, Cable From/To Information, provides the From/To information for each individual cable for use by the installer or maintenance technician. Detailed cabling information (pin outs) for the individual cable can be found in Section 7-2 , Table 7-2, Running Wire List.

The following foldout figures are provided in this chapter:

- Figure FO7-1 NEXRAD System Interface Diagram (Wideband between RDA (UD5), RPG (UD70/170), and PUP (UD41)
- Figure FO7-2 NEXRAD System Interface Diagram (Wideband between RDA (UD5) and MLOS Radio (UD19)
- Figure FO7-3 Radar Data Acquisition Group (RDA) ICD

- Figure FO7-4 Redundant Radar Data Acquisition Group (RDA) ICD
- Figure FO7-5 RDA Shelter Assembly, UD1 ICD (2 sheets)
- Figure FO7-6 FAA Redundant RDA Shelter Assembly, UD1, ICD (3 sheets)
- Figure FO7-7 NWS Redundant RDA Shelter Assembly, UD1, ICD (2 sheets)
- Figure FO7-8 Antenna/Pedestal Group ICD (2 sheets)
- Figure FO7-9 Radar Receiver, UD4 ICD (5 sheets)
- Figure FO7-10 RDA Data Processor, UD5 ICD (4 sheets)
- Figure FO7-11 NWS Redundant RDA Data Processor UD5/UD105 ICD (8 sheets)
- Figure FO7-12 FAA Redundant RDA Data Processor UD5/UD105 ICD (2 sheets)

# Section 7-2. Cable Wiring Data

## 7-2.1 GENERAL.

This section provides point-to-point from/to wiring data for all RDA/RPG Shelter multiconductor cables. The data is provided in Table 7-1 by the cable reference designation number (e.g., "W3" or "4W3"). Some cable reference designation numbers have been modified to show true location versus the designation on the yellow band (i.e., cable W3 goes from UD5J4 to UD2A1(A3)J1. The yellow band shows 2A1J1 as originally installed and the (A3) indicates it actually terminates in the Azimuth Riser which is UD2A1A3. All 100 series cables are for redundant systems. Table 7-2 provides the detailed "pin outs" for each cable to assist the maintenance technician in troubleshooting individual cabling problems.

Table 7-1 Cable From/To Information

| Cable Ref. Desig. | From: | To: | Part Number: |
|---|---|---|---|
| W3 | UD5J4 (P1) | UD2A1(A3)J1 (P2) | 1213460-301 |
| W4 | UD5J3 (P1) | UD2A1(A3)J2 (P2) | 1213461-301 |
| W5 | UD5J2 (P1) | UD1FL2/102 - OUT | 1213462-301 |
| W7 | UD5/105J24 (P1) | UD1FL3/103 - OUT | 1214793-301 |
| W8 | UD5/105J1 (P1) | UD1FL1/101 - OUT | 1213463-301 |
| W9/109 | UD70/170FL1J1 (P1) | 208 VAC/3 PHASE | 2320041-301 |
| | | | 2320041-303 |
| W10 | UD2A1(A3)J3 (P1) | UD4J2 (P2) (Non-Red.) | 1213464-301 |
| | | UD104J2 (P2) (Red. CH1) | 1213464-314 |
| W10A | UD2A1(A3)J3 (P1) | UD104J2 (P2) | 1213464-320 |
| W11 | UD4J7 (P1) | UD5J9 (P2) | 1213465-301 |
| W12 | UD4/104J26 (P1) | UD1FL4/104 - OUT | 1213466-301 |
| W13 | UD5J11 (P1) | UD1A26 LOAD | 1219651-303 |
| W14[3] | UD3TB1,2 (P1) | UD7A3 SEC PDP (P2) | 1213467-301 |
| W15/115 | UD4/104J7 (P1) | UD5/105J13 (P2) | 1217789-301 |
| W17/117 | UD4/104J20 (P1) | UD5/105J21 (P2) | 1213468-301 |
| W19/119 | UD1S1/S101J1 (P1) | UD5/105J10 (P2) | 1213469-303 |
| W20/120 | UD3/103J3 (P1) | UD5/105J7 (P2) | 1213470-301 |
| W21/121 | UD3/103J2 (P1) | UD5/105J8 (P2) | 1213471-301 |

1 Site dependent.
2 Used for testing only. Disconnected when not in use.
3 Supplied by vendor.
4 Adapters.
5 Wires tied back and insulated.
6 FAA RMS.
7 Power Monitor Filter 2A1FL1/5FL2 and/or 2A1FL2/105FL2 installed.

Table 7-1 Cable From/To Information - Cont.

| Cable Ref. Desig. | From: | To: | Part Number: |
|---|---|---|---|
| W22/122 | UD4/104J23 (P1) | UD5/105J18 (P2) | 1213472-301 |
| W23/123 | UD5/105J19 (P1) | UD4/104J21 (P2) | 1213473-301 |
| W24/124 | UD4/104J22 (P1) | UD5/105J20 (P2) | 1213474-301 |
| W25/125 | UD3/103J1 (P1) | UD5/105J22 (P2) | 1213475-301 |
| W26/126 | UD4/104J24 (P1) | UD5/105J23 (P2) | 1213526-301 |
| W30 | UD5J6 (P1) (Non-Red.)<br>UD105J6 (P1) (Red. CH1) | UD7A1J1 (P2) | 1213476-301 |
| W31 | UD5J5 (P1) (Non-Red.)<br>UD105J5 (P1) (Red. CH1) | UD10A9J1 (P2) | 1213477-301 |
| W31 | UD1A27J8 (P1) | UD10A9J1 (P2) | 1213477-319 |
| W31A/131A | UD5/105J5 (P1) | UD10A9J1 (P2)/<br>UD10A9J2 (P2) | 1213477-305/<br>1213477-307 |
| W31A | UD105J5 (P1) | UD1A27J7 (P2) | 1213477-318 |
| W32/132 | UD7A1TB2 | UD6/106TB2 | 1213934-301<br>1213934-303 |
| W35 | UD1AT2TB1 | UD7A1TB2 | 1213935-301 |
| W35/135 | UD1AT2/102TB1 | UD7A1TB2 | 1213935-302 |
| W36 | UD70J19 | UD5J11 | 2320072-303 |
| W36/136[2] | UD70/170J19 (P1) | UD5/105J11 (P2) | 2320072-301 |
| W37[1] | UD5J11 (P1) | UD1A26 LOAD | 1221218-301 |
| W38 | UD31J7 (P1) | UD1TB3 DIAL LINES (P2) | 1214868-31 1 |
| W40 | UD5J11 (P1) | UD19J1 (P2) | 1217041-303 |
| W42[1] | UD1W90P2 (P1) | UD20A10J1 (P2) or<br>UD11A10J1 (P2) | 1213591-336 |
| W43[1] | UD1W91P2 (P1) | UD20A11J1 (P2) or<br>UD11A11J1 (P2) | 1213591-344 |

1 Site dependent.
2 Used for testing only. Disconnected when not in use.
3 Supplied by vendor.
4 Adapters.
5 Wires tied back and insulated.
6 FAA RMS.
7 Power Monitor Filter 2A1FL1/5FL2 and/or 2A1FL2/105FL2 installed.

Table 7-1 Cable From/To Information - Cont.

| Cable Ref. Desig. | From: | To: | Part Number: |
|---|---|---|---|
| W44 | UD70/170J1 (P1) | UD1TB3 - LEASED LINES (P2) | 2320037-304 |
| W44 | UD31J14 (P1) | UD1TB2 - LEASED LINES (P2) | 2320037-307 |
| W45 | UD70/170J2 (P1) | UD1TB3 - DIAL LINES (P2) | 2320037-305 |
| W45 | UD31J15 (P1) | UD1TB1 - DIAL LINES (P2) | 2320037-308 |
| W46[1] | UD70/170J3 (P1) | UD1LEASED LINE 2 (P2) | 2320037-306 |
| W46[1] | UD31J16 (P1) | UD1TB4 - LEASED LINES (P2) | 2320037-309 |
| W48 | UD1W96P2 (P1) | UD40A1J1 (P2) | 1213591-357 |
| W49 | UD1W97P2 (P1) | UD40A2J1 (P2) | 1213591-367 |
| W53 | UD2W5P1 (P1) | UD1W55P2 (P2) | 1213591-304 |
| W54 | UD2W6P1 (P1) | UD1W56P2 (P2) | 1213591-310 |
| W55 | UD4J16 (P1) | UD1W53P2 (P2) | 1213591-313 |
| W56 | UD4J15 (P1) | UD1W54P2 (P2) | 1213591-314 |
| W57/157 | UD1AT10/110 (P1) | UD1WG12/112J2 (P2) | 1218208-201 |
| W58/158 | UD1AT11/111 (P1) | UD3/103DC1J1 (P2) | 1218208-202 |
| W59/159 | UD3/103J4 (P1) | UD4/104J19 (P2) | 1213772-301 |
| W60/160 | UD3/103J5 (P1) | UD4/104J17 (P2) | 1213772-302 |
| W61/161 | UD1AT4/104 (P1) | UD4/104J18 (P2) | 1213479-301 |
| W62[1] | UD5J10 (P2) | UD1S1J1 (P1) UD1S2J1 (P3) | 1223850-301 |
| W63[1] | UD5J11 (P1) | UD1A28 | 1224038-301 |
| W64[1] | UD1TELCO (P1) | UD1A28 | 1222332-302 |
| W65/165 | UD5/105J29 (P1) | RDA J-BOX (P2) | 1223862-301 |
| W74/174 | UD3/103J7 (P1) | UD5/105J17 (P2) | 1213480-301 |
| W75/175 | UD3/103J6 (P1) | UD1AT9 BNC-TEE (P2) | 1213481-202 |

1 Site dependent.
2 Used for testing only. Disconnected when not in use.
3 Supplied by vendor.
4 Adapters.
5 Wires tied back and insulated.
6 FAA RMS.
7 Power Monitor Filter 2A1FL1/5FL2 and/or 2A1FL2/105FL2 installed.

Table 7-1 Cable From/To Information - Cont.

| Cable Ref. Desig. | From: | To: | Part Number: |
|---|---|---|---|
| W76/176 | UD1CR1/101 (P1) | UD1CR2/102 BNC-TEE (P2) | 1213720-302 |
| W80[2] | UD1 PED SYNC TEST (P1) | UD2A1 PED SYNC TEST (P2) | 1214886-301 |
| W83/183 | UD1FL4/104 | UD7A3/29[1] SEC PDP | - |
| W84/184 | UD1FL1/101 | UD7A3/29[1]/30[1] SEC PDP | - |
| W85/185 | UD1FL2/102 | UD7A3/29[1]/30[1] SEC PDP | - |
| W86/186 | UD1FL3/103 | UD7A3/29[1] SEC PDP | - |
| W87/187 | UD1FL5/105 | UD7A3/29[1]/30[1] SEC PDP | - |
| W88/188 | UD1FL5/105 OUTPUT | UD6/106TB1 | 1217030-301 |
| W90[1] | UD19J4 (P1) | UD1W42P1 (P2) | 1217775-203 |
| W91[1] | UD19J5 (P1) | UD1W43P1 (P2) | 1217775-204 |
| W95/195 | UD70/170J17 (P1) | UD5/105J25 (P2) | 2320063-301 |
| W96[1] | UD39J4 (P1) | UD1W48P1 (P2) | 1217775-201 |
| W97[1] | UD39J5 (P1) | UD1W49P1 (P2) | 1217775-202 |
| W100 | UD105J12 (P1) | UD5J12 (P2) | 1217798-301 |
| W110 | UD2A1(A3)J5 (P1) | UD4J2 (P2) (Red. CH2) | 1218221-301 |
| W111 | UD70CP7 (P1) | TELCO Surge Suppressor/Demarc | 2320047-309 |
| W112 | UD31J25 (P1) | TELCO Demarc | 2320047-309 |
| W130 | UD5J6 (P1) (Red. CH2) | UD7A1J2 (P2) | 1213476-302 |
| W131 | UD5J5 (P1) (Red. CH2) | UD10A9J2 (P2) | 1213477-302 |
| W153 | UD2W14P1 (P1) | UD1W155P2 (P2) | 1213591-315 |
| W154 | UD2W15P1 (P1) | UD1W156P2 (P2) | 1213591-321 |
| W155 | UD104J16 (P1) | UD1W153P2 (P2) | 1213591-327<br>1221798-309 |

1 Site dependent.
2 Used for testing only. Disconnected when not in use.
3 Supplied by vendor.
4 Adapters.
5 Wires tied back and insulated.
6 FAA RMS.
7 Power Monitor Filter 2A1FL1/5FL2 and/or 2A1FL2/105FL2 installed.

Table 7-1 Cable From/To Information - Cont.

| Cable Ref. Desig. | From: | To: | Part Number: |
|---|---|---|---|
| W156 | UD104J15 (P1) | UD1W154P2 (P2) | 1213591-328<br>1221798-310 |
| W162 | UD70J1 (P1) | UD31J3 (P2) | 2320064-301 |
| W163 | UD70J2 (P1) | UD31J4 (P2) | 2320064-302 |
| W164 | UD70J3 (P1) | UD31J5 (P2) | 2320064-303 |
| W166 | UD70J12 (P1) | UD31J21 (P2) | 2320065-301 |
| W166A | UD1A27J23 (P1) | UD31AJ23 (P2) | 1218741-305 |
| W166B | UD1A27J26 (P1) | UD31J21 (P2) | 1218741-310 |
| W166C | UD70J12 (P1) | UD1A27J27 (P2) | 2320065-306 |
| W168 | UD70J22 (P1) | UD31J1 (P2) | 2320066-301 |
| W169 | UD170J1 (P1) | UD31J8 (P2) | 2320064-304 |
| W169A | UD170J1 (P1) | UD31AJ14 (P2) | 2320064-31 1 |
| W169B | UD31AJ8 (P1) | UD31J8 (P2) | 1218734-314 |
| W170 | UD170J2 (P1) | UD31J9 (P2) | 2320064-305 |
| W170A | UD170J2 (P1) | UD31AJ15 (P2) | 2320064-312 |
| W170B | UD31AJ9 (P1) | UD31J9 (P2) | 1218734-316 |
| W171 | UD170J3 (P1) | UD31J10 (P2) | 2320064-306 |
| W171A | UD170J3 (P1) | UD31AJ16 (P2) | 2320064-313 |
| W171B | UD31AJ10 (P1) | UD31J10 (P2) | 1218734-318 |
| W172B | UD31AJ11 (P1) | UD31J11 (P2) | 1218734-320 |
| W173 | UD170J12 (P1) | UD31J23 (P2) | 2320065-302 |
| W173A | UD170J12 (P1) | UD1A27J22 (P2) | 2320065-305 |
| W173B | UD1A27J25 (P1) | UD31J23 (P2) | 1218741-307 |
| W173C | UD1A27J24 (P1) | UD31AJ21 (P2) | 1218741-309 |
| W178 | UD170J22 (P1) | UD31J2 (P2) | 2320066-302 |
| W181 | UD105J11 (P1) | UD1TB2 - DIAL LINE (P2) | 1222370-301 |
| W182 | UD5J27 (P1) | UD105J27 (P2) | 1223418-301 |
| W183 | UD5J26 (P1) | UD105J26 (P2) | 1223418-302 |

1 Site dependent.
2 Used for testing only. Disconnected when not in use.
3 Supplied by vendor.
4 Adapters.
5 Wires tied back and insulated.
6 FAA RMS.
7 Power Monitor Filter 2A1FL1/5FL2 and/or 2A1FL2/105FL2 installed.

Table 7-1 Cable From/To Information - Cont.

| Cable Ref. Desig. | From: | To: | Part Number: |
|---|---|---|---|
| W184 | UD5J15 (P1) | UD105J15 (P2) | 1222371-303 |
| W185 | UD5J28 (P1) | UD105J28 (P2) | 1222371-304 |
| W185A | UD5J28 (P1) | UD1A27J3 (P2) | 1222371-307 |
| W280 | UD5J11 (P1) | UD19J1 (P2) | 1217041-304 |
| | | | 1224065-301 |
| | | | 1224065-303 |
| | | | 1224065-306 |
| W281 | UD70J19 (P1) | UD5J11 (P2) | 2320072-302 |
| W328 | UD41J15 (P1) | UD70/170J5 (P2) | 2320036-301 |
| | | | 2320042-301 |
| W328 | UD41J15 (P1) | UD31J13 (P2) | 1214822-304 |
| W328 | UD41J15 (P1) | UD1A27TB1 | 1218824-302 |
| 1W900 | UD1CP1 (P1) | UD5E1 (P2) | 2320002-301 |
| | DUPLEX JACK | UD5E1 (P2) (Red. CH2) | 2320002-309 |
| 1W901 | UD1 DEMARC (P1) | UD105E1 (P2) | 2320002-307 |
| 2W5[1] | W53P1 (P1) | UD2A3A3J3 (P2) | 1213485-301 |
| | | | 1221798-301 |
| | | | 1221798-303 |
| 2W6[1] | W54P1 (P1) | UD2A3A4J2 (P2) | 1213485-301 |
| | | | 1221798-302 |
| | | | 1221798-304 |
| 2W14[1] | W153P1 (P1) | UD2A3A7J3 (P2) | 1221798-305 |
| 2W15[1] | W154P1 (P1) | UD2A3A8J2 (P2) | 1221798-306 |
| 2W20 | UD2A3J3 | UD2A2J5 (P1) | 1221796-301 |
| | | UD2A3A3J4 (P2) | 1221796-303 |
| | | UD2A3A4J3 (P3) | |
| 2W21 | UD2A1A5J1 (P1) | UD2A1J2 (P2) | 1221797-301 |
| | | | 1221797-303 |
| 2W21[7] | UD2A1FL1J1[7] | UD2A1J2 (P2) | 1221797-306 |

1 Site dependent.
2 Used for testing only. Disconnected when not in use.
3 Supplied by vendor.
4 Adapters.
5 Wires tied back and insulated.
6 FAA RMS.
7 Power Monitor Filter 2A1FL1/5FL2 and/or 2A1FL2/105FL2 installed.

Table 7-1 Cable From/To Information - Cont.

| Cable Ref. Desig. | From: | To: | Part Number: |
|---|---|---|---|
| 2W26 | UD2A3J3/ | UD2A2J5 (P1) | 1221796-304 |
| | UD2A3J5 | UD2A3A7J4 (P2) | |
| | | UD2A3A3J4 (P4) | |
| | | UD2A3A8J3 (P3) | |
| | | UD2A3A4J3 (P5) | |
| | | UD2A3S1J1 (P6) | |
| 2W27 | UD2A1A5J1 (P1) | UD2A1J2 (P2) | 1221797-302 |
| | UD2A1A9J1 (P3) | | 1223870-301 |
| 2W27[7] | UD2A1FL1J1 (P1) | UD2A1J2 (P2) | 1223870-302 |
| | UD2A1FL2J1 (P3) | | |
| 2W29[7] | UD2A1A5J1 (P1) | UD2A1FL1J2 (P2) | 1221797-304 |
| 2W30[7] | UD2A1A9J1 (P1) | UD2A1FL2J2 (P2) | 1221797-305 |
| 2W900 | UD2A1A3A3J2 (P1) | UD2A1A3FL1 IN (P2) | 2200011-201 |
| 2W901 | UD2A1A3A7J2 (P1) | UD2A1A3FL2 IN (P2) | 2200011-202 |
| 2A1W1 | UD2A2J6 (P1) | UD2A1J2 | 34636-1 104-101 |
| | | | 30505-1 107-101 |
| 2A1W2 | UD2A2J2 (A1P2) | UD2A1B1J2 (A1P5) | 34636-1 112-101 |
| | | | 30505-1 105-101 |
| (2A)1A3W2 | UD2A3J1 | UD2A2J1 (A3P4) | 34636-1 113-101 |
| | | UD2A3B1J2 (A3P3) | |
| (2A)1A3W3 | UD2A3J2 | UD2A3J4 (A3A1P1) | 54636-1 115-101 |
| | | UD2A3TB1 | |
| | | UD2A3B1J1 (A3P2) | |
| | | UD2A3S4J1 (A3RT2) | |
| | | (A3P5) | |
| 3W1 | UD3A3J14 (P1) | UD3A2J1 (P2) | 157C240G01 |
| 3W2 | UD3A3J27 (P1) | UD3A11A1J1 (P2) | 157C240G02 |
| 3W3 | UD3A3J28 (P1) | UD3A10A1J1 (P2) | 157C240G03 |
| 3W4 | UD3A3J29 (P1) | UD3A8A1J1 (P2) | 157C240G04 |
| 3W5 | UD3A3J26 (P1) | UD3A12J3 (P2) | 157C240G05,G22 |

1 Site dependent.
2 Used for testing only. Disconnected when not in use.
3 Supplied by vendor.
4 Adapters.
5 Wires tied back and insulated.
6 FAA RMS.
7 Power Monitor Filter 2A1FL1/5FL2 and/or 2A1FL2/105FL2 installed.

Table 7-1 Cable From/To Information - Cont.

| Cable Ref. Desig. | From: | To: | Part Number: |
|---|---|---|---|
| 3W6 | UD3A3J31 (P1) | UD3A5J1 (P2) | 157C240G06 |
| 3W7 | UD3A3J15 (P1) | UD3PS1A1J1 (P2) | 157C240G07 |
| 3W8 | UD3A3J16 (P1) | UD3PS2A1J1 (P2) | 157C240G08 |
| 3W9 | UD3A3J19 (P1) | UD3J1 (P2) | 159C557G01 |
| 3W10 | UD3A3J20 (P1) | UD3J2 (P2) | 159C557G02 |
| 3W11 | UD3A3J21 (P1) | UD3J3 (P2) | 159C557G03 |
| 3W14 | UD3A3J2 (P1) | UD3A1A1J1 (P2) | 157C240G14 |
| 3W15 | UD3A3J3 (P1) | UD3A1A1J2 (P2) | 157C240G15 |
| 3W16 | UD3A3J4 (P1) | UD3A1A1J3 (P2) | 157C240G16 |
| 3W17 | UD3A3J7 (P1) | UD3A1J1 (P2) | 157C240G17 |
| 3W18 | UD3A3J8 (P1) | UD3A1J2 (P2) | 157C240G18 |
| 3W19 | UD3A3J9 (P1) | UD3A1J3 (P2) | 157C240G19 |
| 3W20 | UD3A3J10 (P1) | UD3A1J4 (P2) | 157C240G20 |
| 3W21 | UD3A3J32 (P1) | UD3A4J1 (P2) | 157C240G21 |
| 3W22 | UD3J9 (P1) | UD3A6J2 (P2) | 127B823G01 |
| 3W101 | UD3J4 (P1) | UD3A4J2 (P2) | 159C596G01 |
| 3W102 | UD3A4J4 (P1) | UD3A5J2 (P2) | 157C284G01 |
| 3W103 | UD3AT1J1 (P1) | UD3A5J3 (P2) | 157C285G01 |
| 3W104 | UD3AT1J2 (P1) | UD3V1 RF DRIVE I/P (P2) | 157C286G01 |
| 3W105 | UD3J5 (P1) | UD3A5J4 (P2) | 159C595G01 |
| 3W900 | UD3XA8P1/P2 | UD3A12E2/E10 | 2210002-201 |
| 3W901 | UD3XA11P1/P2 | UD3XA11E3/E4 | 2210002-202 |
| 3W902 | UD3A12E7-A, A12E7-B, A12E8-A, A12E8-B | UD3A7E18 A7E19, A7E20, A7E21 | 2320004-301 |
| 3/103W904[6] | UD3J8 (P1) | UD3A3J6 (P2) | 2320010-301 |
| 3/103W905[6] | UD3J9 (P1) | UD3A3J11 (P2) | 2320011-301 |
| 4/104W100 | UD4/104A36 (P1) | UD4/104J15 (P2) | 1213535-202 |
| 4/104W101 | UD4/104DC2 IN | UD4/104A4J1 | |

1 Site dependent.
2 Used for testing only. Disconnected when not in use.
3 Supplied by vendor.
4 Adapters.
5 Wires tied back and insulated.
6 FAA RMS.
7 Power Monitor Filter 2A1FL1/5FL2 and/or 2A1FL2/105FL2 installed.

Table 7-1 Cable From/To Information - Cont.

| Cable Ref. Desig. | From: | To: | Part Number: |
|---|---|---|---|
| 4/104W102 | UD4/104A4J2 (P1) | UD4/104A5J1 (P2) | 1213533-301 |
| 4/104W103 | UD4/104DC2-20dB (P1) | UD4/104A24J3 (P2) | 1213534-301 |
| 4/104W104 | UD4/104A24J2 (P1) | UD4/104J16 (P2) | 1213535-201 |
| 4/104W105 | UD4/104A33 (P1) | UD4/104J18 (P2) | 1213536-201 |
| 4/104W106 | UD4/104A20J2 (P1) | UD4/104A34 (P2) | 1213537-201 |
| 4/104W107 | UD4/104A26J1 (P1) | UD4/104A20J3 (P2) | 1213537-202 |
| 4/104W108 | UD4/104DC1 OUT | UD4/104A21J1 | |
| 4/104W109 | UD4/104A22J1 (P1) | UD4/104A21J2 (P2) | 1213539-301 |
| 4/104W110 | UD4/104A22J2 (P1) | UD4/104J17 (P2) | 1213536-202 |
| 4/104W111 | UD4/104A22J4 (P1) | UD4/104A25J1 (P2) | 1213541-301 |
| 4/104W112 | UD4/104A22J5 (P1) | UD4/104A23J1 (P2) | 1213542-301 |
| 4/104W113 | UD4/104A24J1 (P1) | UD4/104A23J2 (P2) | 1213543-301 |
| 4/104W114 | UD4/104A22J3 (P1) | UD4/104A1J3 (P2) | 1213544-201 |
| 4/104W115 | UD4/104A1J2 (P1) | UD4/104A5J2 (P2) | 1213544-202 |
| 4/104W116 | UD4/104A5J6 (P1) | UD4/104A27J2 (P2) | 1213546-301 |
| 4/104W117 | UD4/104A5J5 (P1) | UD4/104A27J1 (P2) | 1213547-301 |
| 4/104W118 | UD4/104A27J5 (P1) | UD4/104DC1-40dB (P2) | 1213548-301 |
| 4/104W119 | UD4/104A24J4 (P1) | UD4/104A27J8 (P2) | 1213549-301 |
| 4/104W120 | UD4/104A22J7 (P1) | UD4/104A27J3 (P2) | 1213550-301 |
| 4/104W121 | UD4/104A23J3 (P1) | UD4/104A27J6 (P2) | 1213551-301 |
| 4/104W122 | UD4/104A23J4 (P1) | UD4/104A27J7 (P2) | 1213552-301 |
| 4/104W123 | UD4/104A27COM (P1) | UD4/104A29J1 (P2) | 1213553-301 |
| 4/104W128 | UD4/104A22J6 (P1) | UD4/104A27J4 (P2) | 1213558-301 |
| 4/104W129 | UD4/104A1J1 (P1) | UD4/104J19 (P2) | 1213559-201 |
| 4/104W132 | UD4/104A20J4 (P1) | UD4/104J25 (P2) | 1213537-203 |
| 4/104W200 | UD4/104A5J3 (P1) | UD4/104A6J1 (P2) | 1213528-201 |
| 4/104W201[1] | UD4/104A5J7 (P1) | UD4/104A28J1 (P2) | 1213528-202 |
| 4/104W202 | UD4/104A6J2 (P1) | UD4/104A7J1 (P2) | 1213528-203 |
| 4/104W203 | UD4/104A6J3 (P1) | UD4/104A12J1 (P2) | 1213528-204 |

1 Site dependent.
2 Used for testing only. Disconnected when not in use.
3 Supplied by vendor.
4 Adapters.
5 Wires tied back and insulated.
6 FAA RMS.
7 Power Monitor Filter 2A1FL1/5FL2 and/or 2A1FL2/105FL2 installed.

Table 7-1 Cable From/To Information - Cont.

| Cable Ref. Desig. | From: | To: | Part Number: |
|---|---|---|---|
| 4/104W204 | UD4/104A6J4 (P1) | UD4/104A28J6 (P2) | 1213528-205 |
| 4/104W205 | UD4/104A7J2 (P1) | UD4/104A8J1 (P2) | 1213528-206 |
| 4/104W206 | UD4/104A8J2 (P1) | UD4/104A9J1 (P2) | 1213528-207 |
| 4/104W207 | UD4/104A8J3 (P1) | UD4/104A28J4 (P2) | 1213528-208 |
| 4/104W208 | UD4/104A9J2 (P1) | UD4/104A10J1 (P2) | 1213528-209 |
| 4/104W209 | UD4/104A9J3 (P1) | UD4/104A28J2 (P2) | 1213528-210 |
| 4/104W210 | UD4/104A9J4 (P1) | UD4/104A28J3 (P2) | 1213528-211 |
| 4/104W211 | UD4/104A5J4 (P1) | UD4/104A14J1 (P2) | 1213528-212 |
| 4/104W212 | UD4/104A14J2 (P1) | UD4/104A15J1 (P2) | 1213528-213 |
| 4/104W213 | UD4/104A14J3 (P1) | UD4/104A16J1 (P2) | 1213528-214 |
| 4/104W214 | UD4/104A14J5 (P1) | UD4/104A28J8 (P2) | 1213528-215 |
| 4/104W215 | UD4/104A14J4 (P1) | UD4/104A28J7 (P2) | 1213528-216 |
| 4/104W216 | UD4/104A15J2 (P1) | UD4/104A17J1 (P2) | 1213528-217 |
| 4/104W217 | UD4/104A16J2 (P1) | UD4/104A18J1 (P2) | 1213528-218 |
| 4/104W218 | UD4/1104A15J3 (P1) | UD4/104A28J9 (P2) | 1213528-219 |
| 4/104W219[1] | UD4/104A16J3 (P1) | UD4/104A28J10 (P2) | 1213528-220 |
| 4/104W220 | UD4/104A10J3 (P1) | UD4/104A28J5 (P2) | 1213537-204 |
| | | | 1213528-221 |
| 4/104W221 | UD4/104A28COM (P1) | UD4/104A30J1 (P2) | 1213528-222 |
| 4/104W222 | UD4/104A1J4 (P1) | UD4/104A10J2 (P2) | 1213537-205 |
| | | | 1213528-223 |
| 4/104W300 | UD4/104A13J9 (P1) | UD4/104A12J2 (P2) | 1213531-201 |
| 4/104W302 | UD4/104A12J5 (P1) | UD4/104A19J5 (P2) | 1213529-201 |
| 4/104W303 | UD4/104A12J6 (P1) | UD4/104A31J6 (P2) | 1213529-202 |
| 4/104W304 | UD4/1104A17J2 (P1) | UD4/104A19J1 (P2) | 1213529-203 |
| 4/104W306 | UD4/104A18J2 (P1) | UD4/104A19J3 (P2) | 1213529-204 |
| 4/104W308 | UD4/104A17J4 (P1) | UD4/104A31J7 (P2) | 1213529-205 |
| 4/104W309 | UD4/104A18J4 (P1) | UD4/104A31J8 (P2) | 1213529-206 |
| 4/104W310 | UD4/104A29J2 (P1) | UD4/104A31J4 (P2) | 1213529-207 |

1 Site dependent.
2 Used for testing only. Disconnected when not in use.
3 Supplied by vendor.
4 Adapters.
5 Wires tied back and insulated.
6 FAA RMS.
7 Power Monitor Filter 2A1FL1/5FL2 and/or 2A1FL2/105FL2 installed.

Table 7-1 Cable From/To Information - Cont.

| Cable Ref. Desig. | From: | To: | Part Number: |
|---|---|---|---|
| 4/104W311 | UD4/104A30J2 (P1) | UD4/104A31J5 (P2) | 1213529-208 |
| 4/104W315 | UD4/104A11J3 (P1) | UD4/104A10J4 (P2) | 1213530-201 |
| 4/104W316 | UD4/104A11J2 (P1) | UD4/104A10J6 (P2) | 1213530-202 |
| 4/104W319 | UD4/104A11J1 (P1) | UD4/104A12J4 (P2) | 1213531-202 |
| 4/104W320 | UD4/104A10J5 (P1) | UD4/104J9 (P2) | 1213530-203 |
| 4/104W321 | UD4/104A10J7 (P1) | UD4/104J10 (P2) | 1213530-204 |
| 4/104W322 | UD4/104A12J3 (P1) | UD4/104J14 (P2) | 1213527-201 |
| 4/104W323 | UD4/104A31J9 (P1) | UD4/104J11 (P2) | 1213530-205 |
| 4/104W400 | UD4/104A23J6 (P1) | UD4/104A32J5 (P2) | 1213488-301 |
| 4/104W401 | UD4/104A22J8 (P1) | UD4/104A32J8 (P2) | 1213489-301 |
| 4/104W402[1]/ | UD4/104A32J10 (P1) | UD4/104A24J5 (P2) | 1213490-301 |
| W424 | UD4/104A24J5 (P2) | UD4/104TB3 H | |
| | UD4/104A25J2 (P3) | UD4/104TB3 B | |
| | UD4/104A32J10 (P1) | UD4/104A19J7 (P4) | |
| 4/104W403 | UD4/104A28J11 (P1) | UD4/104A32J12 (P2) | 1213491-301 |
| 4/104W404 | UD4/104A27J11 (P1) | UD4/104A32J11 (P2) | 1213492-301 |
| 4/104W405 | UD4/104A1J5 (P1) | UD4/104A32J7 (P2) | 1213493-301 |
| 4/104W406 | UD4/104A31J1 (P1) | UD4/104A32J1 (P2) | 1213733-301 |
| 4/104W407 | UD4/104A31J2 (P1) | UD4/104A32J2 (P2) | 1213495-301 |
| 4/104W408 | UD4/104A11J5 (P1) | UD4/104J20 (P2) | 1213496-301 |
| 4/104W409 | UD4/104A13J8 (P1) | UD4/104J23 (P2) | 1213497-301 |
| 4/104W410 | UD4/104A13J10 (P1) | UD4/104A8J5 (P2) | 1213498-301 |
| 4/104W411 | UD4/104A32J9 (P1) | UD4/104J21 (P2) | 1213499-301 |
| 4/104W412 | UD4/104A32J13 (P1) | UD4/104J22 (P2) | 1213500-301 |
| 4/104W413 | UD4/104A26J2 (P1) | UD4/104A32J4 (P2) | 1214889-301 |
| 4/104W424 | UD4/104A32J10 (P1) | UD4/104A24J5 (P2) | 1217027-301 |
| | | UD4/104A25J2 (P3) | |
| 4/104W500 | UD4/104A8J4 (P1) | UD4/104TB2 F (P2) | 1213506-301 |
| 4/104W501 | UD4/104A9J5 (P1) | UD4/104TB2 B (P2) | 1213507-301 |

1 Site dependent.
2 Used for testing only. Disconnected when not in use.
3 Supplied by vendor.
4 Adapters.
5 Wires tied back and insulated.
6 FAA RMS.
7 Power Monitor Filter 2A1FL1/5FL2 and/or 2A1FL2/105FL2 installed.

Table 7-1 Cable From/To Information - Cont.

| Cable Ref. Desig. | From: | To: | Part Number: |
|---|---|---|---|
| 4/104W502 | UD4/104A10J8 (P1) | UD4/104TB3 C (P2) | 1213508-301 |
| 4/104W503 | UD4/104A12J7 (P1) | UD4/104TB2 A | 1213509-301 |
| 4/104W504 | UD4/104A13J11 (P1) | UD4/104TB2 J | 1213510-301 |
| 4/104W505 | UD4/104A1J6 (P1) | UD4/104TB3 A | 1213511-301 |
| 4/104W506 | UD4/104A5J8 (P1) | UD4/104TB3 F | 1213512-301 |
| 4/104W507 | UD4/104A23J5 (P1) | UD4/104TB3 D | 1213513-301 |
| 4/104W508 | UD4/104A29J3 (P1) | UD4/104TB3 B | 1213514-301 |
| 4/104W509[1] | UD4/104A14J6 (P1) | UD4/104TB2 C | 1213515-301 |
| 4/104W510[1] | UD4/104A17J7 (P1) | UD4/104TB2 D | 1213516-301 |
| 4/104W511[1] | UD4/104A18J7 (P1) | UD4/104TB2 C | 1213517-301 |
| 4/104W512[1] | UD4/104A19J6 (P1) | UD4/104TB2 B | 1213518-301 |
| 4/104W513[1] | UD4/104A30J3 (P1) | UD4/104TB2 D | 1213519-301 |
| 4/104W514 | UD4/104A31J3 (P1) | UD4/104TB2 H | 1213520-301 |
| 4/104W515 | UD4/104A32J3 (P1) | UD4/104TB2 G | 1213521-301 |
| 4/104W516 | UD4/104A11J4 (P1) | UD4/104 PS2,PS7,PS8 | 1213522-301 |
| 4/104W518 | UD4/104A32J6 (P1) | UD4/104PS9 | 1214547-301 |
| 4/104W519 | UD4/104B1 (P1) | UD4/104TB4 | |
| 4/104W520 | UD4/104B2 (P1) | UD4/104TB4 | |
| 4/104W521 | UD4/104TB5-3,TB5-6 | UD4/104B1(P1),B2(P2) | 1222303-301 |
| 4/104W706 | UD4/104TB5-1, -4 | UD4/104PS1TB1-2, -1, GND | 1214883-301 |
| 4/104W707 | UD4/104TB5-2, -5 | UD4/104PS5TB1-2, -1, GND | 1214883-302 |
| 4/104W708 | UD4/104TB5-3, -6 | UD4/104TB4-1, TB4-2, 4/104B1-GND | 1214883-303 |
| 4/104W709 | UD4/104TB5-1, -4 | UD4/104PS8TB1-2, -1, GND | 1214883-304 |
| 4/104W710 | UD4/104J26 (P1) | UD4/104TB5 | 1214959-301 |
| 4/104W900 | UD4/104J27 | UD4/104A37J1 | 2320006-301 |

1 Site dependent.
2 Used for testing only. Disconnected when not in use.
3 Supplied by vendor.
4 Adapters.
5 Wires tied back and insulated.
6 FAA RMS.
7 Power Monitor Filter 2A1FL1/5FL2 and/or 2A1FL2/105FL2 installed.

Table 7-1 Cable From/To Information - Cont.

| Cable Ref. Desig. | From: | To: | Part Number: |
|---|---|---|---|
| 5/105A1W2 | UD5/105A1J3 (P1) | UD5/105A1TB1 | 2330001-301 |
| 5/105A37W1 | UD5/105A1J3 | UD5/105A37 | 2320013-302 |
| 5/105W600 | UD5/105A25J1 (P1) | UD5/105J4 (P2) | 1213562-302 |
| 5/105W601 | UD5/105A6J2 (P1) | UD5/105J3 (P2) | 1213563-301 |
| 5/105W602 | UD5/105A3J4 (P1) | UD5/105J9 (P2) | 1213564-301 |
| 5/105W602[7] | UD5/105FL2J1 (P1) | UD5/105J9 (P2) | 1213564-302 |
| 5/105W604 | UD5/105A3J9 (P1) | UD5/105J10 (P2) | 1213566-301 |
| 5/105W605 | UD5/105A3J3 (P1) | UD5/105J7 (P2) | 1213567-301 |
| 5/105W606 | UD5/105A3J2 (P1) | UD5/105J8 (P2) | 1213568-301 |
| 5/105W610 | UD5/105A10J18 (P1) | UD5/105J20 (P2) | 1213570-301 |
| 5/105W611 | UD5/105A10J17 (P1) | UD5/105J19 (P2) | 1213570-302 |
| 5/105W612 | UD5/105A10J16 (P1) | UD5/105J21 (P2) | 1213572-301 |
| 5/105W613 | UD5/105A10J15 (P1) | UD5/105J18 (P2) | 1213573-301 |
| 5/105W614[1] | UD5/105A9J25 (P1) | UD5/105A12A14J3 (P2) | 1213574-303 |
| 5/105W615[1] | UD5/105A9J24 (P1) | UD5/105A12A14J2 (P2) | 1213574-304 |
| 5/105W616[1] | UD5/105A9J26 (P1) | UD5/105A12A14J4 (P2) | 1213577-305 |
| 5/105W617 | UD5/105A9J30 (P1) | UD5/105A10J12 (P2) | 7180730-00 |
| 5/105W618 | UD5/105A9J31 (P1) | UD5/105A10J13 (P2) | 7180730-01 |
| 5/105W619 | UD5/105A9J32 (P1) | UD5/105A10J14 (P2) | 7180730-03 |
| 5/105W620 | UD5/105A10J19 (P1) | UD5/105J22 (P2) | 1213580-301 |
| 5/105W622 | UD5/105A6J1 (P1) | UD5/105A3J7 (P2) | 1213582-301 |
| 5/105W623 | UD5/105A16J0 (P1) | UD5/105A17B (P2) | 1214756-303 |
| 5/105W625 | UD5/105A6J4 (P1) | UD5/105A2TB1 | 1213585-301 |
| 5/105W626 | UD5/105A10J20 (P1) | UD5/105J23 (P2) | 1213586-301 |
| 5/105W627 | UD5/105A10J21 (P1) | UD5/105J17 (P2) | 1213590-301 |
| 5/105W628 | UD5/105A3J5 (P1) | UD5/105J5 (P2) | 1213503-301 |
| 5/105W629 | UD5/105A3J6 (P1) | UD5/105J6 (P2) | 1213504-301 |
| 5/105W630 | UD5/105A3J10 (P1) | UD5/105PS1, PS2, PS3, XKI | 1213524-302 |

1 Site dependent.
2 Used for testing only. Disconnected when not in use.
3 Supplied by vendor.
4 Adapters.
5 Wires tied back and insulated.
6 FAA RMS.
7 Power Monitor Filter 2A1FL1/5FL2 and/or 2A1FL2/105FL2 installed.

Table 7-1 Cable From/To Information - Cont.

| Cable Ref. Desig. | From: | To: | Part Number: |
|---|---|---|---|
| 5/105W631 | UD5/105A3J8 (P1) | UD5/105A16J9 (P2)<br>UD5/105A16J4 (P3) | 1213525-301 |
| 5/105W632 | UD5/105A16J0 | UD5/105A4SES1-EIA | 1214756-301 |
| 5/105W633 | UD5/105A17A (P1) | UD5/105J25 | 1221220-301 |
| 5/105W634 | UD5/105A3J1 (P1) | UD5/105A2 | 1213502-301 |
| 5/105W638 | UD5/105A16J1 (P1) | UD5/105A4SES2-AUX (P2) | 1214756-301 |
| 5/105W639 | UD5/105A17C (P1) | UD5/105A4SES1-EIA (P2) | 1221221-301 |
| 5/105W640 | UD5/105B1J1 (P1) | UD5/105TB4 | 1213830-307 |
| 5/105W648 | UD5/105TB1 | UD5/105A2TB1, 5/105TB3 | 1214925-301 |
| 5/105W649 | UD5/105PS1 | UD5/105A2TB1 | 1214926-301 |
| 5/105W660 | UD5/105A3J11 (P1) | UD5/105J12 | 1218225-301 |
| 5/105W661 | UD5/105A3J4 (P1) | UD5/105J13 | 1218224-301 |
| 5/105W661[7] | UD5/105FL2J1 (P1) | UD5/105J13 | 1218224-302 |
| 5/105W662 | UD5/105A10J21 (P1) | UD5/105J17, UD5/105A3J12 (P2) | 1222372-302 |
| 5/105W663 | UD5/105A16J8 (P1) | UD5/105A3J13 (P2) | 1222367-301 |
| 5/105W664[1] | UD5/105J15 | UD5/105A3J14 (P1) | 1222368-301 |
| 5W665 | UD5J15 | UD5A3J14 (P1)<br>UD5A19CTL(P2) | 1223382-301 |
| 5/105W666 | UD5/105A17A1 (P1) | UD5/105A4SES1-EIA (P2) | 1214871-313 |
| 5/105W667 | UD5/105A17A2 (P1) | UD5/105A4SES2-AUX (P2) | 1223378-301 |
| 5/105W668 | UD5/105A16J1 (P1) | UD5/105A17C2 (P2) | 1223379-301 |
| 5/105W669 | UD5/105A16J0 (P1) | UD5/105A17C1 (P2) | 1223379-302 |
| 5/105W670 | UD5/105A1J1 (P1) | UD5/105J11 | 1221822-301 |
| 5/105W671 | UD5/105A1J2 (P1) | UD5/105J16 | 1221822-302 |
| 5/105W672[1] | UD5/105A18J1DTE (P1) | UD5/105A1J1 (P2) | 1222328-301 |

1 Site dependent.
2 Used for testing only. Disconnected when not in use.
3 Supplied by vendor.
4 Adapters.
5 Wires tied back and insulated.
6 FAA RMS.
7 Power Monitor Filter 2A1FL1/5FL2 and/or 2A1FL2/105FL2 installed.

Table 7-1 Cable From/To Information - Cont.

| Cable Ref. Desig. | From: | To: | Part Number: |
|---|---|---|---|
| 5/105W673 | UD5A18P1 NETWK (P1) | UD5J11 | 1222329-301 |
| 5W680 | UD5A19A (P1) | UD5J28 | 1223377-302 |
| 5W681 | UD5A17B1 (P1) | UD5J26 | 1223380-301 |
| 5W682 | UD5A17B2 (P1) | UD5J27 | 1223380-302 |
| 5W683 | UD5A19B (P1) | UD5A1J1 (P2) | 1223419-301 |
| 5W684 | UD5A19COM (P2) | UD5A18J1DTE (P1) | 1222328-304 |
| 105W685 | UD105A17B1 (P1) | UD105A20PORT1 (P2) | 1223381-305 |
| 105W686 | UD105A17B2 (P1) | UD105A20PORT2 (P2) | 1223381-306 |
| 105W687 | UD105A20PORT3 (P1) | UD105J26 | 1223380-303 |
| 105W688 | UD105A20PORT4 (P1) | UD105J27 | 1223380-304 |
| 105W689 | UD105A20TRUNK1 (P1) | UD105A21DTE (P2) | 1223383-301 |
| 105W690 | UD105A21DIAL LINE (P1) | UD105J11 | 1223384-301 |
| 5/105W691 | UD5/105A9XA1 | UD5/105A10XA2 | 7180732-00 |
| 5/105W692[7] | UD5/105A3J4 (P1) | UD5/105FL2J2 (P2) | 1224355-301 |
| 5/105W693[7] | UD5/105A3J4 (P1) | UD5/105FL2J2 (P2) | 1224369-301 |
| 5/105W700 | UD5/105TB1, TB3 | UD5/105J1 (P1) | 1213588-301 |
| 5/105W701 | UD5/105A7J1 (P1) | UD5/105J2 (P2) | 1213589-301 |
| 5/105W703 | UD5/105J24 | UD5/105PS4, 5/105A11TB1 | 1221866-301 |
| 5/105W704[1] | UD5/105B1 (P1)<br>UD5/105B2 (P2)<br>UD5/105B3 (P3)<br>UD5/105B4 (P4) | UD5/105TB1-1<br>UD5/105TB1-3 | 1221867-301<br>1223842-301 |
| 5/105W704[1] | UD5/105J31 (P5) | UD5/105B1 (P1)<br>UD5/105B2 (P2)<br>UD5/105B3 (P3)<br>UD5/105B4 (P4) | 1223751-301 |

1 Site dependent.
2 Used for testing only. Disconnected when not in use.
3 Supplied by vendor.
4 Adapters.
5 Wires tied back and insulated.
6 FAA RMS.
7 Power Monitor Filter 2A1FL1/5FL2 and/or 2A1FL2/105FL2 installed.

Table 7-1 Cable From/To Information - Cont.

| Cable Ref. Desig. | From: | To: | Part Number: |
|---|---|---|---|
| 5/105W704[1] | UD5/105TB1 | UD5/105B1 (P1)<br>UD5/105B2 (P2) | 1223842-301 |
| 5/105W705 | UD5/105A18TB1 | UD5/105A18PS1 | 1222342-301 |
| 5/105W706 | UD5/105J31 (P3) | UD5/105B3 (P1)<br>UD5/105B4 (P2) | 1223843-301 |
| 5/105W707 | UD5/105J31 (P1) | UD5/105A2TB1-2,<br>A2S4-2 | 1223815-301 |
| 5/105W708 | UD5/105FL1-LOAD | UD5/105A24TB1<br>UD5/105TB1<br>UD5/105PS5 | 1223816-302 |
| 5/105W709 | UD5/105J29 | UD5/105FL1 | 1223814-301 |
| 5/105W900 | UD5A16J0 (P1) | 5CP1@UD5A32COMM3 (P2) | 1214756-304 |
| 5/105W901 | UD5A16J1 (P1) | 5A35@UD5A32COMM4 (P2) | 1214756-305 |
| 5/105W902 | UD5E1 (P1) | UD5A32A3 TELCO (P2) | 2320002-302 |
| 5/105W902A | UD5/105E1 (P1) | UD5/105A38 TELCO (P2) | 2320002-308 |
| 5/105W903 | UD5A17C (P1) | 5CP1@UD5A32COMM3 (P2) | 1221221-303 |
| 5/105W907 | UD5/105A17-A1 (P1) | 5/105CP1@UD5/105A38 COMM3 (P2) | 1214871-331 |
| 5/105W910 | UD5/105J32 (P1) | UD5/105A37J1 (P2) | 2320007-301 |
| 5/105W911 | UD5/105A16J14 (P1) | UD5/105J31 (P2) | 2320008-301 |
| 5/105W912 | UD5/105A16J11 (P1) | UD5/105J30 (P2) | 2320009-301 |
| 5/105W914 | UD5J25 (P1) | 5CP2@UD5A32COMM1 (P2) | 2320085-301 |
| 5/105W916 | UD5/105A17-A2 (P1) | 5/105A41@UD5/105A38 COMM4 (P2) | 1223378-305 |
| 5/105A37W1 | UD5/105A37TB1 (P1) | UD5/105A1J3 | 2320013-302 |

1 Site dependent.
2 Used for testing only. Disconnected when not in use.
3 Supplied by vendor.
4 Adapters.
5 Wires tied back and insulated.
6 FAA RMS.
7 Power Monitor Filter 2A1FL1/5FL2 and/or 2A1FL2/105FL2 installed.

Table 7-1 Cable From/To Information - Cont.

| Cable Ref. Desig. | From: | To: | Part Number: |
|---|---|---|---|
| 5A1W1 | UD5A1J3 | UD5A1TB1 | 1222424-301 |
| 19W1[1] | UD19J3 (P1) | SEC PWR PNL (P2) | 1217776-303 |
| GND CA | UD3/103E1 (E1) | UD1E4 (E2) | 1217802-301 |
| GND CA | UD4/104E1 (E1) | UD1E1 (E2) | 1217802-302 |
| GND CA | UD5/105E1 (E1) | UD1E3 (E2) | 1217802-303 |
| GND CA | UD1W55/W155P2 (E1) | UD1W56/W156P2 (E2) | 1217802-304 |
| GND CA | UD1W55/W155P2 (E1) | UD1E3 (E2) | 1217802-305 |
| GND CA | UD1W/GFLANGE (E1) | UD1E2 (E2) | 1217802-306 |
| GND CA | UD70/170E1 (E1) | UD1E4 (E2) | 2320061-301 |
| GND CA | UD1A25/A26E1 (E1) | UD1E1 (E2) | 1217802-309 |
| GND CA | UD19 GND (E1) | UD1E4 (E2) | 1217802-310 |
| 17-329 | UD5A12SLOT0000 | UD5A13SLOT0700 | |
| 17-564 | UD5A15 | UD5A14J7 | |
| 17-605 | UD5/105A13 | UD5/105A14J8 | |
| 17-688F01 | UD5/105A12A21J1 | UD5/105A12AT1CONN3 | |
| 17-704F01 | UD5/105PS5A1J8(P8) | UD5/105A13J6 (P6) | |
| 17-704F02 | UD5/105A24TB1 | UD5/105A13J6 (P6) | |
| 17-705 | UD5PS5J2 (P2) | UD5/105A12A3J5B (P5B)<br>UD5/105A13J5 (P5A) | |
| 17-706F05 | UD5/105A15J1 (P1) | UD5/105PS5J6 (P6) | |
| 17-709 | UD5/105A12AT1 CONN3 (P1) | UD5/105PS5J5 (P2) | |
| 17-783[1] | UD5/105A14J2 (P1) | UD5/105A5 (P2) | |
| 17-786 | UD5/105PS5J7 | UD5/105A12A19 CONN2 (J1)<br>UD5/105A16J1 (J2) | |
| 17-835R01 | UD5/105A5 GND | UD5/105 GND | |

1 Site dependent.
2 Used for testing only. Disconnected when not in use.
3 Supplied by vendor.
4 Adapters.
5 Wires tied back and insulated.
6 FAA RMS.
7 Power Monitor Filter 2A1FL1/5FL2 and/or 2A1FL2/105FL2 installed.

Table 7-1 Cable From/To Information - Cont.

| Cable Ref. Desig. | From: | To: | Part Number: |
|---|---|---|---|
| 17-852F02 | UD5/105A12A19 CONN3 | UD5/105A16J2 | |
| | | UD5/105A16J4 | |
| | UD5/105A12A19 CONN4 | UD5/105A16J8 | |
| | | UD5/105A16J9 | |
| | UD5/105A12A19 CONN5 | UD5/105A16J10 | |
| | | UD5/105A16J11 | |
| 17-926F02 [1] | UD5/105A13A1 CONN4 (P1) | UD5/105A5 (P2) | |
| 17-983F01 | UD5/105A12P5/P5U BUSBAR | UD5PS5J8 | |
| 17-989F02 | UD5/105A12J3 (P1) | UD5/105A1205B TOP (P2) | |
| 17-989F04 | UD5/105A12J5 (P1) | UD5/105A1205B BOT (P2) | |
| 17-989F07 | UD5/105A12A5 CONN3 (P1) | UD5/105A12J2 (P2) | |
| 70/170W900 | UD70/170J16 (P1) | UD70/170A37J1 (P2) | 2320056-301 |
| 95-517 | UD5/105A12P5/P5U BUSBAR | UD5/105PS5J8 | |
| 95-579 | UD5/105A8 | UD5/105A14J9 | |
| 95-560F05 | UD5/105A12P5 BUSBAR | UD5/105PS5P5 BUSBAR | |
| 95-560F06 | UD5/105A12P5 BUSBAR | UD5/105PS5P5 BUSBAR | |
| 95-560F08 | UD5/105A12 GND BUSBAR | UD5/105PS5 GND BUSBAR | |
| 95-560F09 | UD5/105A12P5U BUSBAR | UD5/105PS5P5U BUSBAR | |
| 95-579 | UD5/105J31 | UD5/105A8 (P2) | |
| 95-628 | UD5/105A12A12 CONN4 | UD5/105A5 | |
| 95-636 | UD5/105A16J14 (P1) | UD5/105A15J16 (P16) | |

1 Site dependent.
2 Used for testing only. Disconnected when not in use.
3 Supplied by vendor.
4 Adapters.
5 Wires tied back and insulated.
6 FAA RMS.
7 Power Monitor Filter 2A1FL1/5FL2 and/or 2A1FL2/105FL2 installed.

Table 7-1 Cable From/To Information - Cont.

| Cable Ref. Desig. | From: | To: | Part Number: |
|---|---|---|---|
| 95-636 | UD5/105A16J0 (P1) | UD5/105A15J17 (P17) | |
| 95-791 | UD5/105PS5A1 | UD5/105A14J5 | |
| 95-795 | UD5/105A12A20A2 CONN A | UD5/105PS5J9 (P9) | |
| 1217696-301 | UD5PS1-L1, -N2, -GND, & (V-) | UD5PS3TB1-1, -2, -3, & OUT<br>UD5PS2TB1-1, -2, -3, -RTN, & +RTN | 1217696-301 |
| 1221867-301 | UD5/105B2 | UD5/105B3<br>UD5/105B4 | 1221867-301 |
| 1223871 | UD5PS__ | UD5PS__ | 1223871-301 |
| 320226 | UD5A12A18J1 | UD5A1A1J1 | 320226 |
| 34636-1102-101 | UD5A7J2 (P1) | UD5A6J3 (P2) | 34636-1102-101 |

1 Site dependent.
2 Used for testing only. Disconnected when not in use.
3 Supplied by vendor.
4 Adapters.
5 Wires tied back and insulated.
6 FAA RMS.
7 Power Monitor Filter 2A1FL1/5FL2 and/or 2A1FL2/105FL2 installed.

Table 7-2. Running Wire List

| Conductor No. | Conductor Aux. | FROM | TO |
|---|---|---|---|
| | | W3 | |
| | | UD5J4 (P1) | UD2A1(A3)J1 (P2) |
| 1 | | P1-B | P2-B |
| 2 | | P1-C | P2-C |
| 3 | | P1-D | P2-D |
| 4 | | P1-E | P2-E |
| 5 | | P1-F | P2-F |
| 6 | | P1-G | P2-G |
| SHLD | | SHLD | P1-L |
| SHLD | | SHLD | P2-L |
| | | P2-L | P2-GND |
| | | W4 | |
| | | UD5J3 (P1) | UD2A1(A3)J2 (P2) |
| 1 | 1 | P1-A | P2-A |
| 1 | 2 | P1-B | P2-B |
| | SHLD | SHLD | E101 |
| 2 | 1 | P1-C | P2-C |
| 2 | 2 | P1-D | P2-D |
| | SHLD | SHLD | E101 |
| 3 | 1 | P1-K | P2-K |
| 3 | 2 | P1-L | P2-L |
| | SHLD | P1-E | P2-E |
| 4 | 1 | P1-P | P2-P |
| 4 | 2 | P1-Q | P2-Q |
| | SHLD | P1-J | P2-J |
| 5 | 1 | P1-V | P2-V |
| 5 | 2 | P1-W | P2-W |

1 Site dependent.
2 Used for testing only. Disconnected when not in use.
3 Supplied by vendor.
4 Adapters.
5 Wires tied back and insulated.
6 FAA RMS.
7 Power Monitor Filter 2A1FL1/5FL2 and/or 2A1FL2/105FL2 installed.
8 Used on redundant systems only.

Table 7-2. Running Wire List - Cont.

| Conductor No. | Conductor Aux. | FROM | TO |
|---|---|---|---|
| | | W4 | |
| | | UD5J3 (P1) | UD2A1(A3)J2 (P2) |
| | SHLD | P1-O | P2-O |
| 6 | 1 | P1-Z | P2-Z |
| 6 | 2 | P1-a | P2-a |
| | SHLD | P1-S | P2-S |
| 7 | 1 | P1-f | P2-f |
| 7 | 2 | P1-g | P2-g |
| | SHLD | P1-Y | P2-Y |
| 8 | 1 | P1-m | P2-m |
| 8 | 2 | P1-n | P2-n |
| | SHLD | P1-e | P2-e |
| 9 | 1 | P1-q | P2-q |
| 9 | 2 | P1-r | P2-r |
| | SHLD | P1-h | P2-h |
| 10 | 1 | P1-M | P2-M |
| 10 | 2 | P1-t | P2-t |
| | SHLD | SHLD | E101 |
| 11 | 1 | P1-u | P2-u |
| 11 | 2 | P1-v | P2-v |
| | SHLD | P1-p | P2-p |
| 12 | 1 | P1-x | P2-x |
| 12 | 2 | P1-s | P2-s |
| | SHLD | SHLD | E101 |
| 13 | 1 | P1-y | P2-y |
| 13 | 2 | P1-T | P2-T |
| | SHLD | SHLD | E101 |

1 Site dependent.
2 Used for testing only. Disconnected when not in use.
3 Supplied by vendor.
4 Adapters.
5 Wires tied back and insulated.
6 FAA RMS.
7 Power Monitor Filter 2A1FL1/5FL2 and/or 2A1FL2/105FL2 installed.
8 Used on redundant systems only.

Table 7-2. Running Wire List - Cont.

| Conductor No. | Conductor Aux. | FROM | TO |
|---|---|---|---|
| | | W4 | |
| | | UD5J3 (P1) | UD2A1(A3)J2 (P2) |
| 14 | 1 | P1-j | P2-j |
| 14 | 2 | P1-k | P2-k |
| | SHLD | SHLD | E101 |
| 15 | 1 | P1-F | P2-F |
| 15 | 2 | P1-G | P2-G |
| | SHLD | SHLD | E101 |
| 16 | 1 | P1-H | P2-H |
| 16 | 2 | P1-R | P2-R |
| | SHLD | SHLD | E101 |
| 17 | 1 | P1-N | P2-N |
| 17 | 2 | P1-U | P2-U |
| | SHLD | SHLD | E101 |
| 18 | 1 | P1-X | P2-X |
| 18 | 2 | P1-w | P2-w |
| | SHLD | SHLD | E101 |
| 19 | 1 | P1-b | P2-b |
| 19 | 2 | P1-c | P2-c |
| | SHLD | SHLD | E101 |
| 20 | 1 | NC | NC |
| 20 | 2 | NC | NC |
| | SHLD | | |
| 21 | 1 | NC | NC |
| 21 | 2 | NC | NC |
| | SHLD | | |
| SHLD | | SHLD | SHLD |

1 Site dependent.
2 Used for testing only. Disconnected when not in use.
3 Supplied by vendor.
4 Adapters.
5 Wires tied back and insulated.
6 FAA RMS.
7 Power Monitor Filter 2A1FL1/5FL2 and/or 2A1FL2/105FL2 installed.
8 Used on redundant systems only.

Table 7-2. Running Wire List - Cont.

| Conductor No. | Conductor Aux. | FROM | TO |
|---|---|---|---|
| | | W4 | |
| | | UD5J3 (P1) | UD2A1(A3)J2 (P2) |
| 1 | | E101 | P2-d |
| | | W5 | |
| | | UD5J2 (P1) | UD1FL2/102 - OUT |
| 1 | | P1-A | FL2/102-A (OUTPUT) |
| 2 | | P1-B | FL2/102-B (OUTPUT) |
| 3 | | P1-C | FL2/102-C (OUTPUT) |
| 4 | | P1-D | FL2/102-D (OUTPUT) |
| 5 | | P1-E | FL2/102-GND (OUTPUT) |
| | | P1-F | |
| | | P1-G | |
| | | W7 | |
| | | UD5/105J24 (P1) | UD1FL3/103 - OUT |
| 1 | | P1-A | FL3/103-A (OUTPUT) |
| 2 | | P1-B | FL3/103-B (OUTPUT) |
| 3 | | P1-D | FL3/103-N (OUTPUT) |
| 4 | | P1-E | FL3/103-GND (OUTPUT) |
| | | P1-C | |
| | | P1-F | |
| | | P1-G | |
| | | W8 | |
| | | UD5/105J1 (P1) | UD1FL1/101 - OUT |
| 1 | | P1-A | FL1/101-A (OUTPUT) |
| 2 | | P1-B | FL1/101-B (OUTPUT) |

1 Site dependent.
2 Used for testing only. Disconnected when not in use.
3 Supplied by vendor.
4 Adapters.
5 Wires tied back and insulated.
6 FAA RMS.
7 Power Monitor Filter 2A1FL1/5FL2 and/or 2A1FL2/105FL2 installed.
8 Used on redundant systems only.

Table 7-2. Running Wire List - Cont.

| Conductor No. | Conductor Aux. | FROM | TO |
|---|---|---|---|
| | | W8 | |
| | | UD5/105J1 (P1) | UD1FL1/101 - OUT |
| 3 | | P1-C | FL1/101-C (OUTPUT) |
| 4 | | P1-D | FL1/101-D (OUTPUT) |
| 5 | | P1-E | FL1/101-GND (OUTPUT) |
| | | W9/109 | |
| | | UD70/170FL1J1 (P1) | 208 VAC/3 PHASE |
| 1 | | P1-A | PH(A) |
| 2 | | P1-B | PH(B) |
| 3 | | P1-C | PH(C) |
| 4 | | P1-D | (GND) |
| 5 | | P1-E | (N) |
| | | W10 | |
| | | UD2A1(A3)J3 (P1) | UD4J2 (P2) (Non-Red.)<br>UD104J2 (P2)<br>(Red. CH1) |
| 1 | 1 | P1-V | P2-1 |
| 1 | 2 | P1-W | P2-20 |
| | SHLD | SHLD | P2-GND |
| 2 | 1 | P1-b | P2-2 |
| 2 | 2 | P1-c | P2-21 |
| | SHLD | P1-d | P2-GND |
| 3 | 1 | P1-T | P2-4 |
| 3 | 2 | P1-U | P2-22 |
| | SHLD | SHLD | P2-GND |
| 4 | 1 | P1-F | P2-7 |
| 4 | 2 | P1-G | P2-26 |

1 Site dependent.
2 Used for testing only. Disconnected when not in use.
3 Supplied by vendor.
4 Adapters.
5 Wires tied back and insulated.
6 FAA RMS.
7 Power Monitor Filter 2A1FL1/5FL2 and/or 2A1FL2/105FL2 installed.
8 Used on redundant systems only.

Table 7-2. Running Wire List - Cont.

| Conductor No. | Conductor Aux. | FROM | TO |
|---|---|---|---|
| | | W10<br>UD2A1(A3)J3 (P1) | UD4J2 (P2) (Non-Red.)<br>UD104J2 (P2)<br>(Red. CH1) |
| | SHLD | SHLD | P2-GND |
| 5 | 1 | P1-M | P2-8 |
| 5 | 2 | P1-H | P2-27 |
| | SHLD | SHLD | P2-GND |
| 6 | 1 | P1-K | P2-9 |
| 6 | 2 | P1-P | P2-28 |
| | SHLD | SHLD | P2-GND |
| 7 | 1 | P1-g | P2-6 |
| 7 | 2 | P1-h | P2-25 |
| | SHLD | SHLD | P2-GND |
| 8 | 1 | P1-B | P2-5 |
| 8 | 2 | P1-C | P2-23 |
| | SHLD | SHLD | P2-GND |
| 9 | 1 | P1-A | P2-10 |
| 9 | 2 | P1-D | P2-29 |
| | SHLD | SHLD | P2-GND |
| 10 | 1 | P1-E | P2-1 1 |
| 10 | 2 | P1-J | P2-30 |
| | SHLD | SHLD | P2-GND |
| 11 | 1 | P1-N | P2-12 |
| 11 | 2 | P1-L | P2-31 |
| | SHLD | SHLD | P2-GND |
| 12 | 1 | P1-R | P2-13 |

1 Site dependent.
2 Used for testing only. Disconnected when not in use.
3 Supplied by vendor.
4 Adapters.
5 Wires tied back and insulated.
6 FAA RMS.
7 Power Monitor Filter 2A1FL1/5FL2 and/or 2A1FL2/105FL2 installed.
8 Used on redundant systems only.

Table 7-2. Running Wire List - Cont.

| Conductor No. | Conductor Aux. | FROM | TO |
|---|---|---|---|
| | | W10 | |
| | | UD2A1(A3)J3 (P1) | UD4J2 (P2) (Non-Red.)<br>UD104J2 (P2)<br>(Red. CH1) |
| 12 | 2 | P1-S | P2-32 |
| | SHLD | SHLD | P2-GND |
| SHLD | | SHLD | P2-19 |
| SHLD | | SHLD | P2-GND |
| | | W10A | |
| | | UD2A1(A3)J3 (P1) | UD104J2 (P2) |
| 1 | 1 | P1-1 | P2-1 |
| 1 | 2 | P1-20 | P2-20 |
| | SHLD | SHLD | P2-GND |
| 2 | 1 | P1-2 | P2-2 |
| 2 | 2 | P1-21 | P2-21 |
| | SHLD | P1-19 | P2-GND |
| 3 | 1 | P1-4 | P2-4 |
| 3 | 2 | P1-22 | P2-22 |
| | SHLD | SHLD | P2-GND |
| 4 | 1 | P1-7 | P2-7 |
| 4 | 2 | P1-26 | P2-26 |
| | SHLD | SHLD | P2-GND |
| 5 | 1 | P1-8 | P2-8 |
| 5 | 2 | P1-27 | P2-27 |
| | SHLD | SHLD | P2-GND |
| 6 | 1 | P1-9 | P2-9 |
| 6 | 2 | P1-28 | P2-28 |

1 Site dependent.
2 Used for testing only. Disconnected when not in use.
3 Supplied by vendor.
4 Adapters.
5 Wires tied back and insulated.
6 FAA RMS.
7 Power Monitor Filter 2A1FL1/5FL2 and/or 2A1FL2/105FL2 installed.
8 Used on redundant systems only.

Table 7-2. Running Wire List - Cont.

| Conductor No. | Conductor Aux. | FROM | TO |
|---|---|---|---|
| | | W10A | |
| | | UD2A1(A3)J3 (P1) | UD104J2 (P2) |
| | SHLD | SHLD | P2-GND |
| 7 | 1 | P1-6 | P2-6 |
| 7 | 2 | P1-25 | P2-25 |
| | SHLD | SHLD | P2-GND |
| 8 | 1 | P1-5 | P2-5 |
| 8 | 2 | P1-23 | P2-23 |
| | SHLD | SHLD | P2-GND |
| 9 | 1 | P1-10 | P2-10 |
| 9 | 2 | P1-29 | P2-29 |
| | SHLD | SHLD | P2-GND |
| 10 | 1 | P1-1 1 | P2-1 1 |
| 10 | 2 | P1-30 | P2-30 |
| | SHLD | SHLD | P2-GND |
| 11 | 1 | P1-12 | P2-12 |
| 11 | 2 | P1-31 | P2-31 |
| | SHLD | SHLD | P2-GND |
| 12 | 1 | P1-13 | P2-13 |
| 12 | 2 | P1-32 | P2-32 |
| | SHLD | SHLD | P2-GND |
| SHLD | | SHLD | P2-19 |
| SHLD | | P1-GND | P2-GND |
| | | W11 | |
| | | UD4J7 (P1) | UD5J9 (P2) |
| 1 | 1 | P1-1 | P2-1 |
| 1 | 2 | P1-22 | P2-20 |

1 Site dependent.
2 Used for testing only. Disconnected when not in use.
3 Supplied by vendor.
4 Adapters.
5 Wires tied back and insulated.
6 FAA RMS.
7 Power Monitor Filter 2A1FL1/5FL2 and/or 2A1FL2/105FL2 installed.
8 Used on redundant systems only.

Table 7-2. Running Wire List - Cont.

| Conductor No. | Conductor Aux. | FROM | TO |
|---|---|---|---|
| | | W11 | |
| | | UD4J7 (P1) | UD5J9 (P2) |
| | SHLD | P1-GND | |
| 2 | 1 | P1-2 | P2-2 |
| 2 | 2 | P1-23 | P2-21 |
| | SHLD | P1-GND | |
| 3 | 1 | P1-3 | P2-3 |
| 3 | 2 | P1-24 | P2-22 |
| | SHLD | P1-GND | |
| 4 | 1 | P1-4 | P2-4 |
| 4 | 2 | P1-25 | P2-23 |
| | SHLD | P1-GND | |
| 5 | 1 | P1-5 | P2-5 |
| 5 | 2 | P1-26 | P2-24 |
| | SHLD | P1-GND | |
| 6 | 1 | P1-6 | P2-6 |
| 6 | 2 | P1-27 | P2-25 |
| | SHLD | P1-GND | |
| 7 | 1 | P1-7 | P2-7 |
| 7 | 2 | P1-28 | P2-26 |
| | SHLD | P1-GND | |
| 8 | 1 | P1-8 | P2-8 |
| 8 | 2 | P1-29 | P2-27 |
| | SHLD | P1-GND | |
| 9 | 1 | P1-9 | P2-9 |
| 9 | 2 | P1-30 | P2-28 |
| | SHLD | P1-GND | |

1 Site dependent.
2 Used for testing only. Disconnected when not in use.
3 Supplied by vendor.
4 Adapters.
5 Wires tied back and insulated.
6 FAA RMS.
7 Power Monitor Filter 2A1FL1/5FL2 and/or 2A1FL2/105FL2 installed.
8 Used on redundant systems only.

Table 7-2. Running Wire List - Cont.

| Conductor No. | Conductor Aux. | FROM | TO |
|---|---|---|---|
| | | W11 | |
| | | UD4J7 (P1) | UD5J9 (P2) |
| 10 | 1 | P1-10 | P2-10 |
| 10 | 2 | P1-31 | P2-29 |
| | SHLD | P1-GND | |
| 11 | 1 | P1-1 1 | P2-1 1 |
| 11 | 2 | P1-32 | P2-30 |
| | SHLD | P1-GND | |
| 12 | 1 | P1-12 | P2-12 |
| 12 | 2 | P1-33 | P2-31 |
| | SHLD | P1-GND | |
| 13 | 1 | P1-13 | P2-13 |
| 13 | 2 | P1-34 | P2-32 |
| | SHLD | P1-GND | |
| 14 | 1 | P1-14 | P2-14 |
| 14 | 2 | P1-35 | P2-33 |
| | SHLD | P1-GND | |
| 15 | 1 | P1-15 | P2-15 |
| 15 | 2 | P1-36 | P2-34 |
| | SHLD | P1-GND | |
| 16 | 1 | P1-16 | P2-16 |
| 16 | 2 | P1-37 | P2-17 |
| | SHLD | P1-GND | |
| 17 | 1 | P1-17 | P2-18 |
| 17 | 2 | P1-18 | P2-35 |
| | SHLD | P1-GND | |
| 18 | 1 | P1-19 | P2-36 |

1 Site dependent.
2 Used for testing only. Disconnected when not in use.
3 Supplied by vendor.
4 Adapters.
5 Wires tied back and insulated.
6 FAA RMS.
7 Power Monitor Filter 2A1FL1/5FL2 and/or 2A1FL2/105FL2 installed.
8 Used on redundant systems only.

Table 7-2. Running Wire List - Cont.

| Conductor No. | Conductor Aux. | FROM | TO |
|---|---|---|---|
| | | W11 | |
| | | UD4J7 (P1) | UD5J9 (P2) |
| 18 | 2 | P1-20 | P2-37 |
| | SHLD | P1-GND | |
| 19 | 1 | | |
| 19 | 2 | | |
| | SHLD | P1-GND | |
| SHLD | | P1-21 | P2-19 |
| SHLD | | P1-GND | P2-GND |
| | | W12 | |
| | | UD4/104J26 (P1) | UD1FL4/104 - OUT |
| 1 | | P1-A | FL4/104-L (OUTPUT) |
| 2 | | P1-D | FL4/104-N (OUTPUT) |
| 3 | | P1-E | FL4/104-GND (OUTPUT) |
| | | P1-F | |
| | | P1-G | |
| | | P1-C | |
| | | P1-B | |
| | | W13 | |
| | | UD5J11 (P1) | UD1A26 LOAD |
| 1 | 1 | P1-1 | A1 LOAD-3 |
| 1 | 2 | P1-9 | A1 LOAD-4 |
| | SHLD | SHLD | A1 LOAD-GND |
| 2 | 1 | P1-2 | A1 LOAD-1 |
| 2 | 2 | P1-10 | A1 LOAD-2 |
| | SHLD | SHLD | A1 LOAD-GND |

1 Site dependent.
2 Used for testing only. Disconnected when not in use.
3 Supplied by vendor.
4 Adapters.
5 Wires tied back and insulated.
6 FAA RMS.
7 Power Monitor Filter 2A1FL1/5FL2 and/or 2A1FL2/105FL2 installed.
8 Used on redundant systems only.

Table 7-2. Running Wire List

| Conductor No. | Conductor Aux. | FROM | TO |
|---|---|---|---|
| | | W14 | |
| | | UD3TB1,2 (P1) | UD7A3 SEC PDP (P2) |
| 1 | 1 | TB2-1 | PH(A) |
| 2 | 1 | TB2-2 | PH(B) |
| 3 | 1 | TB2-3 | PH(C) |
| 4 | 1 | TB2-4 | (N) |
| 5 | 1 | TB2-5 | (GND) |
| 6 | 1 | TB1-1 | PH(A) |
| 7 | 1 | TB1-2 | (N) |
| 8 | 1 | TB1-3 | (GND) |
| | | W15/115 | |
| | | UD4/104J7 (P1) | UD5/105J13 (P2) |
| 1 | 1 | P1-1 | P2-1 |
| 1 | 2 | P1-22 | P2-18 |
| | SHLD | P1-GND | SHLD |
| 2 | 1 | P1-2 | P2-2 |
| 2 | 2 | P1-23 | P2-19 |
| | SHLD | P1-GND | SHLD |
| 3 | 1 | P1-3 | P2-3 |
| 3 | 2 | P1-24 | P2-20 |
| | SHLD | P1-GND | SHLD |
| 4 | 1 | P1-16 | P2-16 |
| 4 | 2 | P1-37 | P2-33 |
| | SHLD | P1-GND | SHLD |
| 5 | 1 | P1-17 | P2-34 |
| 5 | 2 | P1-38 | P2-35 |
| | SHLD | P1-GND | SHLD |

[1] Site dependent.
[2] Used for testing only. Disconnected when not in use.
[3] Supplied by vendor.
[4] Adapters.
[5] Wires tied back and insulated.
[6] FAA RMS.
[7] Power Monitor Filter 2A1FL1/5FL2 and/or 2A1FL2/105FL2 installed.
[8] Used on redundant systems only.

Table 7-2. Running Wire List - Cont.

| Conductor No. | Conductor Aux. | FROM | TO |
|---|---|---|---|
| | | W15/115 | |
| | | UD4/104J7 (P1) | UD5/105J13 (P2) |
| 6 | 1 | P1-18 | P2-36 |
| 6 | 2 | P1-39 | P2-37 |
| | SHLD | P1-GND | SHLD |
| 7 | 1 | P1-19 | P2-38 |
| 7 | 2 | P1-40 | P2-39 |
| | SHLD | P1-GND | SHLD |
| 8 | 1 | P1-4 | P2-4 |
| 8 | 2 | P1-25 | P2-21 |
| | SHLD | P1-GND | SHLD |
| 9 | 1 | P1-5 | P2-5 |
| 9 | 2 | P1-26 | P2-22 |
| | SHLD | P1-GND | SHLD |
| 10 | 1 | P1-6 | P2-6 |
| 10 | 2 | P1-27 | P2-23 |
| | SHLD | P1-GND | SHLD |
| 11 | 1 | P1-7 | P2-7 |
| 11 | 2 | P1-28 | P2-24 |
| | SHLD | P1-GND | SHLD |
| 12 | 1 | P1-8 | P2-8 |
| 12 | 2 | P1-29 | P2-25 |
| | SHLD | P1-GND | SHLD |
| 13 | 1 | P1-9 | P2-9 |
| 13 | 2 | P1-30 | P2-26 |
| | SHLD | P1-GND | SHLD |

1 Site dependent.
2 Used for testing only. Disconnected when not in use.
3 Supplied by vendor.
4 Adapters.
5 Wires tied back and insulated.
6 FAA RMS.
7 Power Monitor Filter 2A1FL1/5FL2 and/or 2A1FL2/105FL2 installed.
8 Used on redundant systems only.

Table 7-2. Running Wire List

| Conductor No. | Conductor Aux. | FROM | TO |
|---|---|---|---|
| | | W15/115 | |
| | | UD4/104J7 (P1) | UD5/105J13 (P2) |
| 14 | 1 | P1-10 | P2-10 |
| 14 | 2 | P1-31 | P2-27 |
| | SHLD | P1-GND | SHLD |
| 15 | 1 | P1-11 | P2-11 |
| 15 | 2 | P1-32 | P2-28 |
| | SHLD | P1-GND | SHLD |
| 16 | 1 | P1-12 | P2-12 |
| 16 | 2 | P1-33 | P2-29 |
| | SHLD | P1-GND | SHLD |
| 17 | 1 | P1-13 | P2-13 |
| 17 | 2 | P1-34 | P2-30 |
| | SHLD | P1-GND | SHLD |
| 18 | 1 | P1-14 | P2-14 |
| 18 | 2 | P1-35 | P2-31 |
| | SHLD | P1-GND | SHLD |
| 19 | 1 | P1-15 | P2-15 |
| 19 | 2 | P1-36 | P2-32 |
| | SHLD | P1-GND | SHLD |
| SHLD | | P1-21 | P2-17 |
| SHLD | | P1-GND | P2-GND |
| | | W17/117 | |
| | | UD4/104J20 (P1) | UD5/105J21 (P2) |
| 1 | 1 | P1-20 | P2-20 |
| 1 | 2 | P1-1 | P2-1 |
| | SHLD | P1-GND | N/C |

1 Site dependent.
2 Used for testing only. Disconnected when not in use.
3 Supplied by vendor.
4 Adapters.
5 Wires tied back and insulated.
6 FAA RMS.
7 Power Monitor Filter 2A1FL1/5FL2 and/or 2A1FL2/105FL2 installed.
8 Used on redundant systems only.

Table 7-2. Running Wire List - Cont.

| Conductor No. | Conductor Aux. | FROM | TO |
|---|---|---|---|
| | | W17/117 | |
| | | UD4/104J20 (P1) | UD5/105J21 (P2) |
| 2 | 1 | P1-21 | P2-21 |
| 2 | 2 | P1-2 | P2-2 |
| | SHLD | P1-GND | N/C |
| 3 | 1 | P1-22 | P2-22 |
| 3 | 2 | P1-3 | P2-3 |
| | SHLD | P1-GND | N/C |
| 4 | 1 | P1-23 | P2-23 |
| 4 | 2 | P1-4 | P2-4 |
| | SHLD | P1-GND | N/C |
| 5 | 1 | P1-24 | P2-24 |
| 5 | 2 | P1-5 | P2-5 |
| | SHLD | P1-GND | N/C |
| 6 | 1 | P1-25 | P2-25 |
| 6 | 2 | P1-6 | P2-6 |
| | SHLD | P1-GND | N/C |
| 7 | 1 | P1-26 | P2-26 |
| 7 | 2 | P1-7 | P2-7 |
| | SHLD | P1-GND | N/C |
| 8 | 1 | P1-32 | P2-27 |
| 8 | 2 | P1-13 | P2-8 |
| | SHLD | P1-GND | N/C |
| 9 | 1 | P1-30 | P2-28 |
| 9 | 2 | P1-1 1 | P2-9 |
| | SHLD | P1-GND | N/C |
| 10 | 1 | P1-31 | P2-29 |

1 Site dependent.
2 Used for testing only. Disconnected when not in use.
3 Supplied by vendor.
4 Adapters.
5 Wires tied back and insulated.
6 FAA RMS.
7 Power Monitor Filter 2A1FL1/5FL2 and/or 2A1FL2/105FL2 installed.
8 Used on redundant systems only.

Table 7-2. Running Wire List - Cont.

| Conductor No. | Conductor Aux. | FROM | TO |
|---|---|---|---|
| | | W17/117 | |
| | | UD4/104J20 (P1) | UD5/105J21 (P2) |
| 10 | 2 | P1-12 | P2-10 |
| | SHLD | P1-GND | N/C |
| 11 | 1 | P1-27 | P2-30 |
| 11 | 2 | P1-8 | P2-11 |
| | SHLD | P1-GND | N/C |
| 12 | 1 | P1-28 | P2-31 |
| 12 | 2 | P1-9 | P2-12 |
| | SHLD | P1-GND | N/C |
| 13 | 1 | P1-29 | P2-32 |
| 13 | 2 | P1-10 | P2-13 |
| | SHLD | P1-GND | N/C |
| 14 | 1 | P1-33 | P2-33 |
| 14 | 2 | P1-14 | P2-14 |
| | SHLD | P1-GND | N/C |
| 15 | 1 | P1-34 | P2-34 |
| 15 | 2 | P1-15 | P2-15 |
| | SHLD | P1-GND | N/C |
| 16 | 1 | P1-35 | P2-35 |
| 16 | 2 | P1-16 | P2-16 |
| | SHLD | P1-GND | N/C |
| 17 | 1 | P1-36 | P2-36 |
| 17 | 2 | P1-17 | P2-17 |
| | SHLD | P1-GND | N/C |
| 18 | 1 | P1-37 | P2-37 |
| 18 | 2 | P1-18 | P2-18 |

[1] Site dependent.
[2] Used for testing only. Disconnected when not in use.
[3] Supplied by vendor.
[4] Adapters.
[5] Wires tied back and insulated.
[6] FAA RMS.
[7] Power Monitor Filter 2A1FL1/5FL2 and/or 2A1FL2/105FL2 installed.
[8] Used on redundant systems only.

Table 7-2. Running Wire List - Cont.

| Conductor No. | Conductor Aux. | FROM | TO |
|---|---|---|---|
| | | W17/117 | |
| | | UD4/104J20 (P1) | UD5/105J21 (P2) |
| | SHLD | P1-GND | N/C |
| 19 | 1 | N/C | N/C |
| 19 | 2 | P1-19 | P2-19 |
| | SHLD | P1-GND | N/C |
| SHLD | | P1-GND | P2-GND |
| | | W19/119 | |
| | | UD1S1/S101J1 (P1) | UD5/105J10 (P2) |
| 1 | | E101 | P2-1 |
| 2 | | E101 | P2-9 |
| 3 | | E102 | P2-2 |
| 4 | | E102 | P2-10 |
| 5 | | P1-D | P2-11 |
| 6 | | P1-E | P2-4 |
| 7 | | P1-F | P2-12 |
| 8 | | P1-G | P2-5 |
| 9 | | P1-H | P2-13 |
| 10 | | P1-J | P2-6 |
| 11 | | P1-C | P2-3 |
| 12 | | P1-K | P2-7 |
| 13 | | P1-L | P2-8 |
| 14 | | | P2-14 |
| 15 | | | P2-15 |
| SHLD | A | SHLD | E103 |
| SHLD | B | SHLD | P2-GND |
| 16 | | P1-A | E101 |

1 Site dependent.
2 Used for testing only. Disconnected when not in use.
3 Supplied by vendor.
4 Adapters.
5 Wires tied back and insulated.
6 FAA RMS.
7 Power Monitor Filter 2A1FL1/5FL2 and/or 2A1FL2/105FL2 installed.
8 Used on redundant systems only.

Table 7-2. Running Wire List - Cont.

| Conductor No. | Conductor Aux. | FROM | TO |
|---|---|---|---|
| | | W19/119 | |
| | | UD1S1/S101J1 (P1) | UD5/105J10 (P2) |
| 17 | | P1-B | E102 |
| 18 | | E103 | P1-GND |
| | | W20/120 | |
| | | UD3/103J3 (P1) | UD5/105J7 (P2) |
| 1 | | P1-2 | P2-2 |
| 2 | | P1-3 | P2-3 |
| 3 | | P1-4 | P2-4 |
| 4 | | P1-5 | P2-5 |
| 5 | | P1-6 | P2-6 |
| 6 | | P1-7 | P2-7 |
| 7 | | P1-8 | P2-8 |
| 8 | | P1-9 | P2-9 |
| 9 | | P1-10 | P2-10 |
| 10 | | P1-11 | P2-11 |
| 11 | | P1-12 | P2-12 |
| 12 | | P1-13 | P2-13 |
| 13 | | P1-14 | P2-14 |
| 14 | | P1-15 | P2-15 |
| 15 | | P1-16 | P2-16 |
| SHLD | | SHLD | P1-1 |
| SHLD | | SHLD | P2-GND |
| | | W21/121 | |
| | | UD3/103J2 (P1) | UD5/105J8 (P2) |
| 1 | 1 | P1-20 | P2-20 |
| 1 | 2 | P1-2 | P2-2 |

1 Site dependent.
2 Used for testing only. Disconnected when not in use.
3 Supplied by vendor.
4 Adapters.
5 Wires tied back and insulated.
6 FAA RMS.
7 Power Monitor Filter 2A1FL1/5FL2 and/or 2A1FL2/105FL2 installed.
8 Used on redundant systems only.

Table 7-2. Running Wire List - Cont.

| Conductor No. | Conductor Aux. | FROM | TO |
|---|---|---|---|
| | | W21/121 | |
| | | UD3/103J2 (P1) | UD5/105J8 (P2) |
| | SHLD | P1-GND | |
| 2 | 1 | P1-21 | P2-21 |
| 2 | 2 | P1-3 | P2-3 |
| | SHLD | P1-GND | |
| 3 | 1 | P1-22 | P2-22 |
| 3 | 2 | P1-4 | P2-4 |
| | SHLD | P1-GND | |
| 4 | 1 | P1-23 | P2-23 |
| 4 | 2 | P1-5 | P2-5 |
| | SHLD | P1-GND | |
| 5 | 1 | P1-24 | P2-24 |
| 5 | 2 | P1-6 | P2-6 |
| | SHLD | P1-GND | |
| 6 | 1 | P1-25 | P2-25 |
| 6 | 2 | P1-7 | P2-7 |
| | SHLD | P1-GND | |
| 7 | 1 | P1-26 | P2-26 |
| 7 | 2 | P1-8 | P2-8 |
| | SHLD | P1-GND | |
| 8 | 1 | P1-27 | P2-27 |
| 8 | 2 | P1-9 | P2-9 |
| | SHLD | P1-GND | |
| 9 | 1 | P1-28 | P2-28 |
| 9 | 2 | P1-10 | P2-10 |
| | SHLD | P1-GND | |

1 Site dependent.
2 Used for testing only. Disconnected when not in use.
3 Supplied by vendor.
4 Adapters.
5 Wires tied back and insulated.
6 FAA RMS.
7 Power Monitor Filter 2A1FL1/5FL2 and/or 2A1FL2/105FL2 installed.
8 Used on redundant systems only.

Table 7-2. Running Wire List - Cont.

| Conductor No. | Conductor Aux. | FROM | TO |
|---|---|---|---|
| | | W21/121 | |
| | | UD3/103J2 (P1) | UD5/105J8 (P2) |
| 10 | 1 | P1-29 | P2-29 |
| 10 | 2 | P1-1 1 | P2-1 1 |
| | SHLD | P1-GND | |
| 11 | 1 | P1-30 | P2-30 |
| 11 | 2 | P1-12 | P2-12 |
| | SHLD | P1-GND | |
| 12 | 1 | P1-31 | P2-31 |
| 12 | 2 | P1-13 | P2-13 |
| | SHLD | P1-GND | |
| 13 | 1 | P1-32 | P2-32 |
| 13 | 2 | P1-14 | P2-14 |
| | SHLD | P1-GND | |
| 14 | 1 | P1-33 | P2-33 |
| 14 | 2 | P1-15 | P2-15 |
| | SHLD | P1-GND | |
| 15 | 1 | P1-34 | P2-34 |
| 15 | 2 | P1-16 | P2-16 |
| | SHLD | P1-GND | |
| 16 | 1 | P1-35 | P2-35 |
| 16 | 2 | P1-17 | P2-17 |
| | SHLD | P1-GND | |
| 17 | 1 | P1-19 | P2-19 |
| 17 | 2 | P1-18 | P2-18 |
| | SHLD | P1-GND | |
| 18 | 1 | P1-37 | P2-37 |

1 Site dependent.
2 Used for testing only. Disconnected when not in use.
3 Supplied by vendor.
4 Adapters.
5 Wires tied back and insulated.
6 FAA RMS.
7 Power Monitor Filter 2A1FL1/5FL2 and/or 2A1FL2/105FL2 installed.
8 Used on redundant systems only.

Table 7-2. Running Wire List - Cont.

| Conductor No. | Conductor Aux. | FROM | TO |
|---|---|---|---|
| | | W21/121 | |
| | | UD3/103J2 (P1) | UD5/105J8 (P2) |
| 18 | 2 | P1-36 | P2-36 |
| | SHLD | P1-GND | |
| 19 | 1 | | |
| 19 | 2 | | |
| | SHLD | P1-GND | |
| SHLD | | P1-GND | P2-GND |
| SHLD | | SHLD | E101 |
| | | E101 | P1-1 |
| | | W22/122 | |
| | | UD4/104J23 (P1) | UD5/105J18 (P2) |
| 1 | 1 | P1-20 | P2-20 |
| 1 | 2 | P1-1 | P2-1 |
| | SHLD | P1-GND | N/C |
| 2 | 1 | P1-21 | P2-21 |
| 2 | 2 | P1-2 | P2-2 |
| | SHLD | P1-GND | N/C |
| 3 | 1 | P1-22 | P2-22 |
| 3 | 2 | P1-3 | P2-3 |
| | SHLD | P1-GND | N/C |
| 4 | 1 | P1-23 | P2-23 |
| 4 | 2 | P1-4 | P2-4 |
| | SHLD | P1-GND | N/C |
| 5 | 1 | P1-24 | P2-24 |
| 5 | 2 | P1-5 | P2-5 |
| | SHLD | P1-GND | N/C |

1 Site dependent.
2 Used for testing only. Disconnected when not in use.
3 Supplied by vendor.
4 Adapters.
5 Wires tied back and insulated.
6 FAA RMS.
7 Power Monitor Filter 2A1FL1/5FL2 and/or 2A1FL2/105FL2 installed.
8 Used on redundant systems only.

Table 7-2. Running Wire List - Cont.

| Conductor No. | Conductor Aux. | FROM | TO |
|---|---|---|---|
| | | W22/122 | |
| | | UD4/104J23 (P1) | UD5/105J18 (P2) |
| 6 | 1 | P1-25 | P2-25 |
| 6 | 2 | P1-6 | P2-6 |
| | SHLD | P1-GND | N/C |
| 7 | 1 | P1-26 | P2-26 |
| 7 | 2 | P1-7 | P2-7 |
| | SHLD | P1-GND | N/C |
| 8 | 1 | P1-27 | P2-27 |
| 8 | 2 | P1-8 | P2-8 |
| | SHLD | P1-GND | N/C |
| 9 | 1 | P1-28 | P2-28 |
| 9 | 2 | P1-9 | P2-9 |
| | SHLD | P1-GND | N/C |
| 10 | 1 | P1-29 | P2-29 |
| 10 | 2 | P1-10 | P2-10 |
| | SHLD | P1-GND | N/C |
| 11 | 1 | P1-30 | P2-30 |
| 11 | 2 | P1-1 1 | P2-1 1 |
| | SHLD | P1-GND | N/C |
| 12 | 1 | P1-31 | P2-31 |
| 12 | 2 | P1-12 | P2-12 |
| | SHLD | P1-GND | N/C |
| 13 | 1 | P1-32 | P2-32 |
| 13 | 2 | P1-13 | P2-13 |
| | SHLD | P1-GND | N/C |
| 14 | 1 | P1-33 | P2-33 |

1 Site dependent.
2 Used for testing only. Disconnected when not in use.
3 Supplied by vendor.
4 Adapters.
5 Wires tied back and insulated.
6 FAA RMS.
7 Power Monitor Filter 2A1FL1/5FL2 and/or 2A1FL2/105FL2 installed.
8 Used on redundant systems only.

Table 7-2. Running Wire List - Cont.

| Conductor No. | Conductor Aux. | FROM | TO |
|---|---|---|---|
| | | W22/122 | |
| | | UD4/104J23 (P1) | UD5/105J18 (P2) |
| 14 | 2 | P1-14 | P2-14 |
| | SHLD | P1-GND | N/C |
| 15 | 1 | P1-34 | P2-34 |
| 15 | 2 | P1-15 | P2-15 |
| | SHLD | P1-GND | N/C |
| 16 | 1 | P1-35 | P2-35 |
| 16 | 2 | P1-16 | P2-16 |
| | SHLD | P1-GND | N/C |
| 17 | 1 | P1-36 | P2-36 |
| 17 | 2 | P1-17 | P2-17 |
| | SHLD | P1-GND | N/C |
| 18 | 1 | P1-37 | P2-37 |
| 18 | 2 | P1-18 | P2-18 |
| | SHLD | P1-GND | N/C |
| 19 | 1 | N/C | N/C |
| 19 | 2 | N/C | N/C |
| | SHLD | P1-GND | N/C |
| SHLD | | P1-GND | P2-GND |
| | | W23/123 | |
| | | UD5/105J19 (P1) | UD4/104J21 (P2) |
| 1 | 1 | P1-20 | P2-2 |
| 1 | 2 | P1-1 | P2-1 |
| | SHLD | P1-GND | N/C |
| 2 | 1 | P1-21 | P2-4 |
| 2 | 2 | P1-2 | P2-3 |

1 Site dependent.
2 Used for testing only. Disconnected when not in use.
3 Supplied by vendor.
4 Adapters.
5 Wires tied back and insulated.
6 FAA RMS.
7 Power Monitor Filter 2A1FL1/5FL2 and/or 2A1FL2/105FL2 installed.
8 Used on redundant systems only.

Table 7-2. Running Wire List - Cont.

| Conductor No. | Conductor Aux. | FROM | TO |
|---|---|---|---|
| | | W23/123 | |
| | | UD5/105J19 (P1) | UD4/104J21 (P2) |
| | SHLD | P1-GND | N/C |
| 3 | 1 | P1-22 | P2-6 |
| 3 | 2 | P1-3 | P2-5 |
| | SHLD | P1-GND | N/C |
| 4 | 1 | P1-23 | P2-8 |
| 4 | 2 | P1-4 | P2-7 |
| | SHLD | P1-GND | N/C |
| 5 | 1 | P1-24 | P2-10 |
| 5 | 2 | P1-5 | P2-9 |
| | SHLD | P1-GND | N/C |
| 6 | 1 | P1-25 | P2-12 |
| 6 | 2 | P1-6 | P2-11 |
| | SHLD | P1-GND | N/C |
| 7 | 1 | P1-26 | P2-14 |
| 7 | 2 | P1-7 | P2-13 |
| | SHLD | P1-GND | N/C |
| 8 | 1 | P1-27 | P2-16 |
| 8 | 2 | P1-8 | P2-15 |
| | SHLD | P1-GND | N/C |
| 9 | 1 | P1-28 | P2-18 |
| 9 | 2 | P1-9 | P2-17 |
| | SHLD | P1-GND | N/C |
| 10 | 1 | P1-29 | P2-33 |
| 10 | 2 | P1-10 | P2-19 |
| | SHLD | P1-GND | N/C |

[1] Site dependent.
[2] Used for testing only. Disconnected when not in use.
[3] Supplied by vendor.
[4] Adapters.
[5] Wires tied back and insulated.
[6] FAA RMS.
[7] Power Monitor Filter 2A1FL1/5FL2 and/or 2A1FL2/105FL2 installed.
[8] Used on redundant systems only.

Table 7-2. Running Wire List - Cont.

| Conductor No. | Conductor Aux. | FROM | TO |
|---|---|---|---|
| | | W23/123 | |
| | | UD5/105J19 (P1) | UD4/104J21 (P2) |
| 11 | 1 | P1-30 | P2-21 |
| 11 | 2 | P1-1 1 | P2-20 |
| | SHLD | P1-GND | N/C |
| 12 | 1 | P1-31 | P2-23 |
| 12 | 2 | P1-12 | P2-22 |
| | SHLD | P1-GND | N/C |
| 13 | 1 | P1-32 | P2-25 |
| 13 | 2 | P1-13 | P2-24 |
| | SHLD | P1-GND | N/C |
| 14 | 1 | P1-33 | P2-27 |
| 14 | 2 | P1-14 | P2-26 |
| | SHLD | P1-GND | N/C |
| 15 | 1 | P1-34 | P2-29 |
| 15 | 2 | P1-15 | P2-28 |
| | SHLD | P1-GND | N/C |
| 16 | 1 | P1-35 | P2-36 |
| 16 | 2 | P1-16 | P2-34 |
| | SHLD | P1-GND | N/C |
| 17 | 1 | P1-36 | P2-37 |
| 17 | 2 | P1-17 | P2-35 |
| | SHLD | P1-GND | N/C |
| 18 | 1 | P1-37 | P2-31 |
| 18 | 2 | P1-18 | P2-30 |
| | SHLD | P1-GND | N/C |
| 19 | 1 | N/C | N/C |

1 Site dependent.
2 Used for testing only. Disconnected when not in use.
3 Supplied by vendor.
4 Adapters.
5 Wires tied back and insulated.
6 FAA RMS.
7 Power Monitor Filter 2A1FL1/5FL2 and/or 2A1FL2/105FL2 installed.
8 Used on redundant systems only.

Table 7-2. Running Wire List - Cont.

| Conductor No. | Conductor Aux. | FROM | TO |
|---|---|---|---|
| | | W23/123 | |
| | | UD5/105J19 (P1) | UD4/104J21 (P2) |
| 19 | 2 | N/C | N/C |
| | SHLD | P1-19 | P2-32 |
| SHLD | | P1-GND | P2-GND |
| | | W24/124 | |
| | | UD4/104J22 (P1) | UD5/105J20 (P2) |
| 1 | 1 | P1-2 | P2-20 |
| 1 | 2 | P1-1 | P2-1 |
| | SHLD | P1-GND | N/C |
| 2 | 1 | P1-4 | P2-21 |
| 2 | 2 | P1-3 | P2-2 |
| | SHLD | P1-GND | N/C |
| 3 | 1 | P1-6 | P2-22 |
| 3 | 2 | P1-5 | P2-3 |
| | SHLD | P1-GND | N/C |
| 4 | 1 | P1-8 | P2-23 |
| 4 | 2 | P1-7 | P2-4 |
| | SHLD | P1-GND | N/C |
| 5 | 1 | P1-10 | P2-24 |
| 5 | 2 | P1-9 | P2-5 |
| | SHLD | P1-GND | N/C |
| 6 | 1 | P1-12 | P2-25 |
| 6 | 2 | P1-1 1 | P2-6 |
| | SHLD | P1-GND | N/C |
| 7 | 1 | P1-13 | P2-26 |
| 7 | 2 | P1-14 | P2-7 |

1 Site dependent.
2 Used for testing only. Disconnected when not in use.
3 Supplied by vendor.
4 Adapters.
5 Wires tied back and insulated.
6 FAA RMS.
7 Power Monitor Filter 2A1FL1/5FL2 and/or 2A1FL2/105FL2 installed.
8 Used on redundant systems only.

Table 7-2. Running Wire List - Cont.

| Conductor No. | Conductor Aux. | FROM | TO |
|---|---|---|---|
| | | W24/124 | |
| | | UD4/104J22 (P1) | UD5/105J20 (P2) |
| | SHLD | P1-GND | N/C |
| 8 | 1 | P1-16 | P2-27 |
| 8 | 2 | P1-15 | P2-8 |
| | SHLD | P1-GND | N/C |
| 9 | 1 | P1-18 | P2-28 |
| 9 | 2 | P1-17 | P2-9 |
| | SHLD | P1-GND | N/C |
| 10 | 1 | P1-20 | P2-29 |
| 10 | 2 | P1-19 | P2-10 |
| | SHLD | P1-GND | N/C |
| 11 | 1 | P1-22 | P2-30 |
| 11 | 2 | P1-21 | P2-11 |
| | SHLD | P1-GND | N/C |
| 12 | 1 | P1-24 | P2-31 |
| 12 | 2 | P1-23 | P2-12 |
| | SHLD | P1-GND | N/C |
| 13 | 1 | P1-26 | P2-32 |
| 13 | 2 | P1-25 | P2-13 |
| | SHLD | P1-GND | N/C |
| 14 | 1 | P1-28 | P2-33 |
| 14 | 2 | P1-27 | P2-14 |
| | SHLD | P1-GND | N/C |
| 15 | 1 | P1-30 | P2-34 |
| 15 | 2 | P1-29 | P2-15 |
| | SHLD | P1-GND | N/C |

1 Site dependent.
2 Used for testing only. Disconnected when not in use.
3 Supplied by vendor.
4 Adapters.
5 Wires tied back and insulated.
6 FAA RMS.
7 Power Monitor Filter 2A1FL1/5FL2 and/or 2A1FL2/105FL2 installed.
8 Used on redundant systems only.

Table 7-2. Running Wire List - Cont.

| Conductor No. | Conductor Aux. | FROM | TO |
|---|---|---|---|
| | | W24/124 | |
| | | UD4/104J22 (P1) | UD5/105J20 (P2) |
| 16 | 1 | P1-32 | P2-35 |
| 16 | 2 | P1-31 | P2-16 |
| | SHLD | P1-GND | N/C |
| 17 | 1 | P1-34 | P2-36 |
| 17 | 2 | P1-33 | P2-17 |
| | SHLD | P1-GND | N/C |
| 18 | 1 | P1-36 | P2-37 |
| 18 | 2 | P1-35 | P2-18 |
| | SHLD | P1-GND | N/C |
| 19 | 1 | N/C | N/C |
| 19 | 2 | N/C | N/C |
| | SHLD | P1-GND | N/C |
| SHLD | | P1-GND | P2-GND |
| | | W25/125 | |
| | | UD3/103J1 (P1) | UD5/105J22 (P2) |
| 1 | 1 | P1-19 | P2-20 |
| 1 | 2 | P1-1 | P2-1 |
| | SHLD | SHLD A | P1-GND |
| 2 | 1 | P1-2 | P2-21 |
| 2 | 2 | P1-20 | P2-2 |
| | SHLD | SHLD A | P1-GND |
| 3 | 1 | P1-3 | P2-22 |
| 3 | 2 | P1-21 | P2-3 |
| | SHLD | SHLD A | P1-GND |
| 4 | 1 | P1-4 | P2-23 |

1 Site dependent.
2 Used for testing only. Disconnected when not in use.
3 Supplied by vendor.
4 Adapters.
5 Wires tied back and insulated.
6 FAA RMS.
7 Power Monitor Filter 2A1FL1/5FL2 and/or 2A1FL2/105FL2 installed.
8 Used on redundant systems only.

Table 7-2. Running Wire List - Cont.

| Conductor No. | Conductor Aux. | FROM | TO |
|---|---|---|---|
| | | W25/125 | |
| | | UD3/103J1 (P1) | UD5/105J22 (P2) |
| 4 | 2 | P1-22 | P2-4 |
| | SHLD | SHLD A | P1-GND |
| 5 | 1 | P1-5 | P2-24 |
| 5 | 2 | P1-23 | P2-5 |
| | SHLD | SHLD A | P1-GND |
| 6 | 1 | P1-6 | P2-25 |
| 6 | 2 | P1-24 | P2-6 |
| | SHLD | SHLD A | P1-GND |
| 7 | 1 | P1-25 | P2-26 |
| 7 | 2 | P1-7 | P2-7 |
| | SHLD | SHLD A | P1-GND |
| 8 | 1 | P1-26 | P2-27 |
| 8 | 2 | P1-8 | P2-8 |
| | SHLD | SHLD A | P1-GND |
| 9 | 1 | P1-27 | P2-28 |
| 9 | 2 | P1-9 | P2-9 |
| | SHLD | SHLD A | P1-GND |
| 10 | 1 | P1-28 | P2-29 |
| 10 | 2 | P1-10 | P2-10 |
| | SHLD | SHLD A | P1-GND |
| 11 | 1 | P1-29 | P2-30 |
| 11 | 2 | P1-1 1 | P2-1 1 |
| | SHLD | SHLD A | P1-GND |
| 12 | 1 | P1-30 | P2-31 |
| 12 | 2 | P1-12 | P2-12 |

1 Site dependent.
2 Used for testing only. Disconnected when not in use.
3 Supplied by vendor.
4 Adapters.
5 Wires tied back and insulated.
6 FAA RMS.
7 Power Monitor Filter 2A1FL1/5FL2 and/or 2A1FL2/105FL2 installed.
8 Used on redundant systems only.

Table 7-2. Running Wire List - Cont.

| Conductor No. | Conductor Aux. | FROM | TO |
|---|---|---|---|
| | | W25/125 | |
| | | UD3/103J1 (P1) | UD5/105J22 (P2) |
| | SHLD | SHLD A | P1-GND |
| 13 | 1 | P1-31 | P2-32 |
| 13 | 2 | P1-13 | P2-13 |
| | SHLD | SHLD A | P1-GND |
| 14 | 1 | P1-14 | P2-33 |
| 14 | 2 | P1-32 | P2-14 |
| | SHLD | SHLD A | P1-GND |
| 15 | 1 | P1-34 | P2-34 |
| 15 | 2 | P1-15 | P2-15 |
| | SHLD | SHLD A | P1-GND |
| 16 | 1 | P1-35 | P2-35 |
| 16 | 2 | P1-16 | P2-16 |
| | SHLD | SHLD A | P1-GND |
| 17 | 1 | P1-36 | P2-36 |
| 17 | 2 | P1-17 | P2-17 |
| | SHLD | SHLD A | P1-GND |
| 18 | 1 | P1-37 | P2-37 |
| 18 | 2 | P1-18 | P2-18 |
| | SHLD | SHLD A | P1-GND |
| 19 | 1 | | |
| 19 | 2 | | |
| | SHLD | | |
| SHLD | | SHLD A | P1-GND |

1 Site dependent.
2 Used for testing only. Disconnected when not in use.
3 Supplied by vendor.
4 Adapters.
5 Wires tied back and insulated.
6 FAA RMS.
7 Power Monitor Filter 2A1FL1/5FL2 and/or 2A1FL2/105FL2 installed.
8 Used on redundant systems only.

Table 7-2. Running Wire List - Cont.

| Conductor No. | Conductor Aux. | FROM | TO |
|---|---|---|---|
| | | W26/126 | |
| | | UD4/104J24 (P1) | UD5/105J23 (P2) |
| 1 | 1 | P1-3 | P2-3 |
| 1 | 2 | P1-4 | P2-4 |
| | SHLD | P1-GND | |
| 2 | 1 | P1-5 | P2-5 |
| 2 | 2 | P1-6 | P2-6 |
| | SHLD | P1-GND | |
| 3 | 1 | P1-7 | P2-1 1 |
| 3 | 2 | P1-9 | P2-12 |
| | SHLD | P1-GND | |
| 4 | 1 | P1-15 | P2-13 |
| 4 | 2 | P1-17 | P2-14 |
| | SHLD | P1-GND | |
| 5 | 1 | P1-13 | P2-15 |
| 5 | 2 | P1-1 1 | P2-16 |
| | SHLD | P1-GND | |
| 6 | 1 | P1-1 | P2-1 |
| 6 | 2 | P1-2 | P2-2 |
| | SHLD | P1-GND | |
| 7 | 1 | P1-8 | P2-8 |
| 7 | 2 | P1-10 | P2-10 |
| | SHLD | P1-GND | |
| SHLD | | P1-GND | P2-GND |

1 Site dependent.
2 Used for testing only. Disconnected when not in use.
3 Supplied by vendor.
4 Adapters.
5 Wires tied back and insulated.
6 FAA RMS.
7 Power Monitor Filter 2A1FL1/5FL2 and/or 2A1FL2/105FL2 installed.
8 Used on redundant systems only.

Table 7-2. Running Wire List - Cont.

| Conductor No. | Conductor Aux. | FROM | TO |
|---|---|---|---|
| | | W30<br>UD5J6 (P1) (Non-Red.)<br>UD105J6 (P1)<br>(Red. CH1) | UD7A1J1 (P2) |
| 1 | 1 | P1-1 | P2-1 |
| 1 | 2 | P1-18 | P2-18 |
| | SHLD | P1-GND | N/C |
| 2 | 1 | P1-35 | P2-35 |
| 2 | 2 | P1-3 | P2-3 |
| | SHLD | P1-GND | N/C |
| 3 | 1 | P1-20 | P2-20 |
| 3 | 2 | P1-4 | P2-4 |
| | SHLD | P1-GND | N/C |
| 4 | 1 | P1-37 | P2-37 |
| 4 | 2 | P1-5 | P2-5 |
| | SHLD | P1-GND | N/C |
| 5 | 1 | P1-22 | P2-22 |
| 5 | 2 | P1-39 | P2-39 |
| | SHLD | P1-GND | N/C |
| 6 | 1 | P1-7 | P2-7 |
| 6 | 2 | P1-40 | P2-40 |
| | SHLD | P1-GND | N/C |
| 7 | 1 | P1-24 | P2-24 |
| 7 | 2 | P1-8 | P2-8 |
| | SHLD | P1-GND | N/C |
| 8 | 1 | P1-41 | P2-41 |
| 8 | 2 | P1-25 | P2-25 |

1 Site dependent.
2 Used for testing only. Disconnected when not in use.
3 Supplied by vendor.
4 Adapters.
5 Wires tied back and insulated.
6 FAA RMS.
7 Power Monitor Filter 2A1FL1/5FL2 and/or 2A1FL2/105FL2 installed.
8 Used on redundant systems only.

Table 7-2. Running Wire List - Cont.

| Conductor No. | Conductor Aux. | FROM | TO |
|---|---|---|---|
| | | W30<br>UD5J6 (P1) (Non-Red.)<br>UD105J6 (P1)<br>(Red. CH1) | UD7A1J1 (P2) |
| | SHLD | P1-GND | N/C |
| 9 | 1 | P1-9 | P2-9 |
| 9 | 2 | P1-42 | P2-42 |
| | SHLD | P1-GND | N/C |
| 10 | 1 | P1-26 | P2-26 |
| 10 | 2 | P1-10 | P2-10 |
| | SHLD | P1-GND | N/C |
| 11 | 1 | P1-43 | P2-43 |
| 11 | 2 | P1-27 | P2-27 |
| | SHLD | P1-GND | P2-34 |
| 12 | 1 | P1-11 | P2-11 |
| 12 | 2 | P1-44 | P2-44 |
| | SHLD | P1-GND | P2-36 |
| 13 | 1 | P1-28 | P2-28 |
| 13 | 2 | P1-12 | P2-12 |
| | SHLD | P1-GND | P2-2 |
| 14 | 1 | P1-45 | P2-45 |
| 14 | 2 | P1-29 | P2-29 |
| | SHLD | P1-GND | P2-38 |
| 15 | 1 | P1-13 | P2-13 |
| 15 | 2 | P1-46 | P2-46 |
| | SHLD | P1-GND | P2-21 |
| 16 | 1 | P1-30 | P2-30 |

1 Site dependent.
2 Used for testing only. Disconnected when not in use.
3 Supplied by vendor.
4 Adapters.
5 Wires tied back and insulated.
6 FAA RMS.
7 Power Monitor Filter 2A1FL1/5FL2 and/or 2A1FL2/105FL2 installed.
8 Used on redundant systems only.

Table 7-2. Running Wire List - Cont.

| Conductor No. | Conductor Aux. | FROM | TO |
|---|---|---|---|
| | | W30 | |
| | | UD5J6 (P1) (Non-Red.)<br>UD105J6 (P1)<br>(Red. CH1) | UD7A1J1 (P2) |
| 16 | 2 | P1-14 | P2-14 |
| | SHLD | P1-GND | P2-6 |
| 17 | 1 | P1-48 | P2-48 |
| 17 | 2 | P1-32 | P2-32 |
| | SHLD | P1-GND | N/C |
| 18 | 1 | P1-16 | P2-16 |
| 18 | 2 | P1-49 | P2-49 |
| | SHLD | P1-GND | N/C |
| 19 | 1 | P1-17 | P2-17 |
| 19 | 2 | P1-33 | P2-33 |
| | SHLD | P1-GND | N/C |
| SHLD | | P1-GND | P2-GND |
| | | W31 | |
| | | UD5J5 (P1) (Non-Red.)<br>UD105J5 (P1)<br>(Red. CH1) | UD10A9J1 (P2) |
| 1 | 1 | P1-1 | P2-1 |
| 1 | 2 | P1-34 | P2-34 |
| | SHLD | P1-GND | P2-47 |
| 2 | 1 | P1-18 | P1-18 |
| 2 | 2 | P1-2 | P2-2 |
| | SHLD | P1-GND | P2-48 |
| 3 | 1 | P1-5 | P2-5 |
| 3 | 2 | P1-38 | P2-38 |

1 Site dependent.
2 Used for testing only. Disconnected when not in use.
3 Supplied by vendor.
4 Adapters.
5 Wires tied back and insulated.
6 FAA RMS.
7 Power Monitor Filter 2A1FL1/5FL2 and/or 2A1FL2/105FL2 installed.
8 Used on redundant systems only.

Table 7-2. Running Wire List - Cont.

| Conductor No. | Conductor Aux. | FROM | TO |
|---|---|---|---|
| | | W31<br>UD5J5 (P1) (Non-Red.)<br>UD105J5 (P1)<br>(Red. CH1) | UD10A9J1 (P2) |
| | SHLD | P1-GND | SHLD |
| 4 | 1 | P1-22 | P2-22 |
| 4 | 2 | P1-6 | P2-6 |
| | SHLD | P1-GND | SHLD |
| 5 | 1 | P1-39 | P2-39 |
| 5 | 2 | P1-23 | P2-23 |
| | SHLD | P1-GND | SHLD |
| 6 | 1 | P1-7 | P2-7 |
| 6 | 2 | P1-40 | P2-40 |
| | SHLD | P1-GND | SHLD |
| 7 | 1 | P1-24 | P2-24 |
| 7 | 2 | P1-8 | P2-8 |
| | SHLD | P1-GND | SHLD |
| 8 | 1 | P1-41 | P2-41 |
| 8 | 2 | P1-25 | P2-25 |
| | SHLD | P1-GND | SHLD |
| 9 | 1 | P1-9 | P2-9 |
| 9 | 2 | P1-42 | P2-42 |
| | SHLD | P1-GND | SHLD |
| 10 | 1 | P1-26 | P2-26 |
| 10 | 2 | P1-10 | P2-10 |
| | SHLD | P1-GND | SHLD |
| 11 | 1 | P1-15 | P2-15 |

1 Site dependent.
2 Used for testing only. Disconnected when not in use.
3 Supplied by vendor.
4 Adapters.
5 Wires tied back and insulated.
6 FAA RMS.
7 Power Monitor Filter 2A1FL1/5FL2 and/or 2A1FL2/105FL2 installed.
8 Used on redundant systems only.

Table 7-2. Running Wire List - Cont.

| Conductor No. | Conductor Aux. | FROM | TO |
|---|---|---|---|
| | | W31<br>UD5J5 (P1) (Non-Red.)<br>UD105J5 (P1)<br>(Red. CH1) | UD10A9J1 (P2) |
| 11 | 2 | P1-31 | P2-31 |
| | SHLD | P1-GND | SHLD |
| 12 | 1 | P1-43 | P2-43 |
| 12 | 2 | P1-27 | P2-27 |
| | SHLD | P1-GND | SHLD |
| 13 | 1 | P1-28 | P2-28 |
| 13 | 2 | P1-12 | P2-12 |
| | SHLD | P1-GND | SHLD |
| 14 | 1 | P1-1 1 | P2-1 1 |
| 14 | 2 | P1-44 | P2-44 |
| | SHLD | P1-GND | SHLD |
| 15 | 1 | P1-13 | P2-13 |
| 15 | 2 | P1-14 | P2-14 |
| | SHLD | P1-GND | SHLD |
| 16 | 1 | P1-30 | P2-30 |
| 16 | 2 | P1-29 | P2-29 |
| | SHLD | P1-GND | SHLD |
| 17 | 1 | P1-17 | P2-17 |
| 17 | 2 | P1-33 | P2-33 |
| | SHLD | P1-GND | SHLD |
| 18 | 1 | P1-16 | P2-16 |
| 18 | 2 | P1-32 | P2-32 |

1 Site dependent.
2 Used for testing only. Disconnected when not in use.
3 Supplied by vendor.
4 Adapters.
5 Wires tied back and insulated.
6 FAA RMS.
7 Power Monitor Filter 2A1FL1/5FL2 and/or 2A1FL2/105FL2 installed.
8 Used on redundant systems only.

Table 7-2. Running Wire List - Cont.

| Conductor No. | Conductor Aux. | FROM | TO |
|---|---|---|---|
| | | W31 | |
| | | UD5J5 (P1) (Non-Red.)<br>UD105J5 (P1)<br>(Red. CH1) | UD10A9J1 (P2) |
| | SHLD | P1-GND | SHLD |
| SHLD | | P1-GND | SHLD |
| | | W31 | |
| | | UD1A27J8 (P1) | UD10A9J1 (P2) |
| 1 | 1 | P1-1 | P2-1 |
| 1 | 2 | P1-34 | P2-34 |
| | SHLD | P1-GND | P2-47 |
| 2 | 1 | P1-18 | P1-18 |
| 2 | 2 | P1-2 | P2-2 |
| | SHLD | P1-GND | P2-48 |
| 3 | 1 | P1-5 | P2-5 |
| 3 | 2 | P1-38 | P2-38 |
| | SHLD | P1-GND | SHLD |
| 4 | 1 | P1-22 | P2-22 |
| 4 | 2 | P1-6 | P2-6 |
| | SHLD | P1-GND | SHLD |
| 5 | 1 | P1-39 | P2-39 |
| 5 | 2 | P1-23 | P2-23 |
| | SHLD | P1-GND | SHLD |
| 6 | 1 | P1-7 | P2-7 |
| 6 | 2 | P1-40 | P2-40 |
| | SHLD | P1-GND | SHLD |
| 7 | 1 | P1-24 | P2-24 |

1 Site dependent.
2 Used for testing only. Disconnected when not in use.
3 Supplied by vendor.
4 Adapters.
5 Wires tied back and insulated.
6 FAA RMS.
7 Power Monitor Filter 2A1FL1/5FL2 and/or 2A1FL2/105FL2 installed.
8 Used on redundant systems only.

Table 7-2. Running Wire List - Cont.

| Conductor No. | Conductor Aux. | FROM | TO |
|---|---|---|---|
| | | W31 | |
| | | UD1A27J8 (P1) | UD10A9J1 (P2) |
| 7 | 2 | P1-8 | P2-8 |
| | SHLD | P1-GND | SHLD |
| 8 | 1 | P1-41 | P2-41 |
| 8 | 2 | P1-25 | P2-25 |
| | SHLD | P1-GND | SHLD |
| 9 | 1 | P1-9 | P2-9 |
| 9 | 2 | P1-42 | P2-42 |
| | SHLD | P1-GND | SHLD |
| 10 | 1 | P1-26 | P2-26 |
| 10 | 2 | P1-10 | P2-10 |
| | SHLD | P1-GND | SHLD |
| 11 | 1 | P1-15 | P2-15 |
| 11 | 2 | P1-31 | P2-31 |
| | SHLD | P1-GND | SHLD |
| 12 | 1 | P1-43 | P2-43 |
| 12 | 2 | P1-27 | P2-27 |
| | SHLD | P1-GND | SHLD |
| 13 | 1 | P1-28 | P2-28 |
| 13 | 2 | P1-12 | P2-12 |
| | SHLD | P1-GND | SHLD |
| 14 | 1 | P1-1 1 | P2-1 1 |
| 14 | 2 | P1-44 | P2-44 |
| | SHLD | P1-GND | SHLD |
| 15 | 1 | P1-13 | P2-13 |
| 15 | 2 | P1-14 | P2-14 |

1 Site dependent.
2 Used for testing only. Disconnected when not in use.
3 Supplied by vendor.
4 Adapters.
5 Wires tied back and insulated.
6 FAA RMS.
7 Power Monitor Filter 2A1FL1/5FL2 and/or 2A1FL2/105FL2 installed.
8 Used on redundant systems only.

Table 7-2. Running Wire List - Cont.

| Conductor No. | Conductor Aux. | FROM | TO |
|---|---|---|---|
| | | W31 | |
| | | UD1A27J8 (P1) | UD10A9J1 (P2) |
| | SHLD | P1-GND | SHLD |
| 16 | 1 | P1-30 | P2-30 |
| 16 | 2 | P1-29 | P2-29 |
| | SHLD | P1-GND | SHLD |
| 17 | 1 | P1-17 | P2-17 |
| 17 | 2 | P1-33 | P2-33 |
| | SHLD | P1-GND | SHLD |
| 18 | 1 | P1-16 | P2-16 |
| 18 | 2 | P1-32 | P2-32 |
| | SHLD | P1-GND | SHLD |
| SHLD | | P1-GND | SHLD |
| | | W31A/131A | |
| | | UD5/105J5 (P1) | UD10A9J1 (P2)/ UD10A9J2 (P2) |
| Same pinouts as W31 above with the following exceptions:<br>Conductor #1 SHLD goes to SHLD on P2 connector vice P2-47 as illustrated for W31.<br>Conductor #2 SHLD goes to SHLD on P2 connector vice P2-48 as illustrated for W31. | | | |
| 1 | 1 | P1-1 | P2-1 |
| 1 | 2 | P1-34 | P2-34 |
| | SHLD | P1-GND | P2-47 |
| 2 | 1 | P1-18 | P1-18 |
| 2 | 2 | P1-2 | P2-2 |
| | SHLD | P1-GND | P2-48 |
| 3 | 1 | P1-5 | P2-5 |
| 3 | 2 | P1-38 | P2-38 |

1 Site dependent.
2 Used for testing only. Disconnected when not in use.
3 Supplied by vendor.
4 Adapters.
5 Wires tied back and insulated.
6 FAA RMS.
7 Power Monitor Filter 2A1FL1/5FL2 and/or 2A1FL2/105FL2 installed.
8 Used on redundant systems only.

Table 7-2. Running Wire List - Cont.

| Conductor No. | Conductor Aux. | FROM | TO |
|---|---|---|---|
| | | W31A/131A | |
| | | UD5/105J5 (P1) | UD10A9J1 (P2)/ UD10A9J2 (P2) |
| | SHLD | P1-GND | SHLD |
| 4 | 1 | P1-22 | P2-22 |
| 4 | 2 | P1-6 | P2-6 |
| | SHLD | P1-GND | SHLD |
| 5 | 1 | P1-39 | P2-39 |
| 5 | 2 | P1-23 | P2-23 |
| | SHLD | P1-GND | SHLD |
| 6 | 1 | P1-7 | P2-7 |
| 6 | 2 | P1-40 | P2-40 |
| | SHLD | P1-GND | SHLD |
| 7 | 1 | P1-24 | P2-24 |
| 7 | 2 | P1-8 | P2-8 |
| | SHLD | P1-GND | SHLD |
| 8 | 1 | P1-41 | P2-41 |
| 8 | 2 | P1-25 | P2-25 |
| | SHLD | P1-GND | SHLD |
| 9 | 1 | P1-9 | P2-9 |
| 9 | 2 | P1-42 | P2-42 |
| | SHLD | P1-GND | SHLD |
| 10 | 1 | P1-26 | P2-26 |
| 10 | 2 | P1-10 | P2-10 |
| | SHLD | P1-GND | SHLD |
| 11 | 1 | P1-15 | P2-15 |
| 11 | 2 | P1-31 | P2-31 |

1 Site dependent.
2 Used for testing only. Disconnected when not in use.
3 Supplied by vendor.
4 Adapters.
5 Wires tied back and insulated.
6 FAA RMS.
7 Power Monitor Filter 2A1FL1/5FL2 and/or 2A1FL2/105FL2 installed.
8 Used on redundant systems only.

Table 7-2. Running Wire List - Cont.

| Conductor No. | Conductor Aux. | FROM | TO |
|---|---|---|---|
| | | W31A/131A | |
| | | UD5/105J5 (P1) | UD10A9J1 (P2)/ UD10A9J2 (P2) |
| | SHLD | P1-GND | SHLD |
| 12 | 1 | P1-43 | P2-43 |
| 12 | 2 | P1-27 | P2-27 |
| | SHLD | P1-GND | SHLD |
| 13 | 1 | P1-28 | P2-28 |
| 13 | 2 | P1-12 | P2-12 |
| | SHLD | P1-GND | SHLD |
| 14 | 1 | P1-1 1 | P2-1 1 |
| 14 | 2 | P1-44 | P2-44 |
| | SHLD | P1-GND | SHLD |
| 15 | 1 | P1-13 | P2-13 |
| 15 | 2 | P1-14 | P2-14 |
| | SHLD | P1-GND | SHLD |
| 16 | 1 | P1-30 | P2-30 |
| 16 | 2 | P1-29 | P2-29 |
| | SHLD | P1-GND | SHLD |
| 17 | 1 | P1-17 | P2-17 |
| 17 | 2 | P1-33 | P2-33 |
| | SHLD | P1-GND | SHLD |
| 18 | 1 | P1-16 | P2-16 |
| 18 | 2 | P1-32 | P2-32 |
| | SHLD | P1-GND | SHLD |
| SHLD | | P1-GND | SHLD |

1 Site dependent.
2 Used for testing only. Disconnected when not in use.
3 Supplied by vendor.
4 Adapters.
5 Wires tied back and insulated.
6 FAA RMS.
7 Power Monitor Filter 2A1FL1/5FL2 and/or 2A1FL2/105FL2 installed.
8 Used on redundant systems only.

Table 7-2. Running Wire List - Cont.

| Conductor No. | Conductor Aux. | FROM | TO |
|---|---|---|---|
| | | W31A | |
| | | UD105J5 (P1) | UD1A27J7 (P2) |
| 1 | 1 | P1-1 | P2-1 |
| 1 | 2 | P1-34 | P2-34 |
| | SHLD | P1-GND | P2-47 |
| 2 | 1 | P1-18 | P1-18 |
| 2 | 2 | P1-2 | P2-2 |
| | SHLD | P1-GND | P2-48 |
| 3 | 1 | P1-5 | P2-5 |
| 3 | 2 | P1-38 | P2-38 |
| | SHLD | P1-GND | SHLD |
| 4 | 1 | P1-22 | P2-22 |
| 4 | 2 | P1-6 | P2-6 |
| | SHLD | P1-GND | SHLD |
| 5 | 1 | P1-39 | P2-39 |
| 5 | 2 | P1-23 | P2-23 |
| | SHLD | P1-GND | SHLD |
| 6 | 1 | P1-7 | P2-7 |
| 6 | 2 | P1-40 | P2-40 |
| | SHLD | P1-GND | SHLD |
| 7 | 1 | P1-24 | P2-24 |
| 7 | 2 | P1-8 | P2-8 |
| | SHLD | P1-GND | SHLD |
| 8 | 1 | P1-41 | P2-41 |
| 8 | 2 | P1-25 | P2-25 |
| | SHLD | P1-GND | SHLD |
| 9 | 1 | P1-9 | P2-9 |

[1] Site dependent.
[2] Used for testing only. Disconnected when not in use.
[3] Supplied by vendor.
[4] Adapters.
[5] Wires tied back and insulated.
[6] FAA RMS.
[7] Power Monitor Filter 2A1FL1/5FL2 and/or 2A1FL2/105FL2 installed.
[8] Used on redundant systems only.

Table 7-2. Running Wire List - Cont.

| Conductor No. | Conductor Aux. | FROM | TO |
|---|---|---|---|
| | | W31A | |
| | | UD105J5 (P1) | UD1A27J7 (P2) |
| 9 | 2 | P1-42 | P2-42 |
| | SHLD | P1-GND | SHLD |
| 10 | 1 | P1-26 | P2-26 |
| 10 | 2 | P1-10 | P2-10 |
| | SHLD | P1-GND | SHLD |
| 11 | 1 | P1-15 | P2-15 |
| 11 | 2 | P1-31 | P2-31 |
| | SHLD | P1-GND | SHLD |
| 12 | 1 | P1-43 | P2-43 |
| 12 | 2 | P1-27 | P2-27 |
| | SHLD | P1-GND | SHLD |
| 13 | 1 | P1-28 | P2-28 |
| 13 | 2 | P1-12 | P2-12 |
| | SHLD | P1-GND | SHLD |
| 14 | 1 | P1-1 1 | P2-1 1 |
| 14 | 2 | P1-44 | P2-44 |
| | SHLD | P1-GND | SHLD |
| 15 | 1 | P1-13 | P2-13 |
| 15 | 2 | P1-14 | P2-14 |
| | SHLD | P1-GND | SHLD |
| 16 | 1 | P1-30 | P2-30 |
| 16 | 2 | P1-29 | P2-29 |
| | SHLD | P1-GND | SHLD |
| 17 | 1 | P1-17 | P2-17 |
| 17 | 2 | P1-33 | P2-33 |

1 Site dependent.
2 Used for testing only. Disconnected when not in use.
3 Supplied by vendor.
4 Adapters.
5 Wires tied back and insulated.
6 FAA RMS.
7 Power Monitor Filter 2A1FL1/5FL2 and/or 2A1FL2/105FL2 installed.
8 Used on redundant systems only.

Table 7-2. Running Wire List - Cont.

| Conductor No. | Conductor Aux. | FROM | | TO |
|---|---|---|---|---|
| | | | W31A | |
| | | UD105J5 (P1) | | UD1A27J7 (P2) |
| | SHLD | P1-GND | | SHLD |
| 18 | 1 | P1-16 | | P2-16 |
| 18 | 2 | P1-32 | | P2-32 |
| | SHLD | P1-GND | | SHLD |
| SHLD | | P1-GND | | SHLD |
| | | | W32/132 | |
| | | UD7A1TB2 | | UD6/106TB2 |
| 1 | 1 | TB2-23 | | TB2-1 |
| 1 | 2 | TB2-24 | | TB2-4 |
| | | | W35 | |
| | | UD1AT2TB1 | | UD7A1TB2 |
| 1 | 1 | TB1-2 | | TB2-22 |
| 1 | 2 | TB1-1 | | TB2-21 |
| | | | W35/135 | |
| | | UD1AT2/102TB1 | | UD7A1TB2 |
| 1 | 1 | TB1-2 | | TB2-25 |
| 1 | 2 | TB1-1 | | TB2-26 |
| | | | W36 | |
| | | UD70J19 (P1)<br>UD70/170J19 (P1) | W36/136 | UD5J11 (P2)<br>UD5/105J11 (P2) |
| 1 | 1 | P1-1 | | P2-10 |
| 1 | 2 | P1-9 | | P2-2 |
| | A | SHLD | | E101 |
| | B | SHLD | | E102 |
| 2 | 1 | P1-2 | | P2-9 |

1 Site dependent.
2 Used for testing only. Disconnected when not in use.
3 Supplied by vendor.
4 Adapters.
5 Wires tied back and insulated.
6 FAA RMS.
7 Power Monitor Filter 2A1FL1/5FL2 and/or 2A1FL2/105FL2 installed.
8 Used on redundant systems only.

Table 7-2. Running Wire List - Cont.

| Conductor No. | Conductor Aux. | FROM | | TO |
|---|---|---|---|---|
| | | | W36 | |
| | | UD70J19 (P1)<br>UD70/170J19 (P1) | W36/136 | UD5J11 (P2)<br>UD5/105J11 (P2) |
| 2 | 2 | P1-10 | | P2-1 |
| | A | SHLD | | E103 |
| | B | SHLD | | E104 |
| 3 | 1 | | | |
| 3 | 2 | | | |
| | SHLD | | | |
| 4 | | E101 | | E103 |
| 5 | | E102 | | E104 |
| 6 | | E103 | | P1-5 |
| 7 | | E104 | | P2-5 |
| | | | W37 | |
| | | UD5J11 (P1) | | UD1A26 LOAD |
| 1 | 1 | P1-1 | | A1 LOAD-1 |
| 1 | 2 | P1-9 | | A1 LOAD-2 |
| | A | SHLD | | N/C |
| | B | SHLD | | E101 |
| 2 | 1 | P1-2 | | A1LOAD-3 |
| 2 | 2 | P1-10 | | A1LOAD-4 |
| | A | SHLD | | N/C |
| | B | SHLD | | E101 |
| 3 | 1 | N/C | | N/C |
| 3 | 2 | N/C | | N/C |
| SHLD | | SHLD | | P1-GND |
| | | E101 | | A1 LOAD-GND |

1 Site dependent.
2 Used for testing only. Disconnected when not in use.
3 Supplied by vendor.
4 Adapters.
5 Wires tied back and insulated.
6 FAA RMS.
7 Power Monitor Filter 2A1FL1/5FL2 and/or 2A1FL2/105FL2 installed.
8 Used on redundant systems only.

Table 7-2. Running Wire List - Cont.

| Conductor No. | Conductor Aux. | FROM | TO |
|---|---|---|---|
| | | W38 | |
| | | UD31J7 (P1) | UD1TB3 DIAL LINES (P2) |
| 1 | 1 | P1-1 | P2-1 |
| 1 | 2 | P1-26 | P2-26 |
| 2 | 1 | P1-2 | P2-2 |
| 2 | 2 | P1-27 | P2-27 |
| 3 | 1 | P1-3 | P2-3 |
| 3 | 2 | P1-28 | P2-28 |
| 4 | 1 | P1-4 | P2-4 |
| 4 | 2 | P1-29 | P2-29 |
| 5 | 1 | P1-5 | P2-5 |
| 5 | 2 | P1-30 | P2-30 |
| 6 | 1 | P1-6 | P2-6 |
| 6 | 2 | P1-31 | P2-31 |
| 7 | 1 | P1-7 | P2-7 |
| 7 | 2 | P1-32 | P2-32 |
| 8 | 1 | P1-8 | P2-8 |
| 8 | 2 | P1-33 | P2-33 |
| 9 | 1 | P1-9 | P2-9 |
| 9 | 2 | P1-34 | P2-34 |
| 10 | 1 | P1-10 | P2-10 |
| 10 | 2 | P1-35 | P2-35 |
| 11 | 1 | P1-1 1 | P2-1 1 |
| 11 | 2 | P1-36 | P2-36 |
| 12 | 1 | P1-12 | P2-12 |
| 12 | 2 | P1-37 | P2-37 |

1 Site dependent.
2 Used for testing only. Disconnected when not in use.
3 Supplied by vendor.
4 Adapters.
5 Wires tied back and insulated.
6 FAA RMS.
7 Power Monitor Filter 2A1FL1/5FL2 and/or 2A1FL2/105FL2 installed.
8 Used on redundant systems only.

Table 7-2. Running Wire List - Cont.

| Conductor No. | Conductor Aux. | FROM | TO |
|---|---|---|---|
| | | W38 | |
| | | UD31J7 (P1) | UD1TB3 DIAL LINES (P2) |
| 13 | 1 | P1-13 | P2-13 |
| 13 | 2 | P1-38 | P2-38 |
| 14 | 1 | P1-14 | P2-14 |
| 14 | 2 | P1-39 | P2-39 |
| 15 | 1 | P1-15 | P2-15 |
| 15 | 2 | P1-40 | P2-40 |
| 16 | 1 | P1-16 | P2-16 |
| 16 | 2 | P1-41 | P2-41 |
| 17 | 1 | P1-17 | P2-17 |
| 17 | 2 | P1-42 | P2-42 |
| 18 | 1 | P1-18 | P2-18 |
| 18 | 2 | P1-43 | P2-43 |
| 19 | 1 | P1-19 | P2-19 |
| 19 | 2 | P1-44 | P2-44 |
| 20 | 1 | P1-20 | P2-20 |
| 20 | 2 | P1-45 | P2-45 |
| 21 | 1 | P1-21 | P2-21 |
| 21 | 2 | P1-46 | P2-46 |
| 22 | 1 | P1-22 | P2-22 |
| 22 | 2 | P1-47 | P2-47 |
| 23 | 1 | P1-23 | P2-23 |
| 23 | 2 | P1-48 | P2-48 |
| 24 | 1 | P1-24 | P2-24 |
| 24 | 2 | P1-49 | P2-49 |

1 Site dependent.
2 Used for testing only. Disconnected when not in use.
3 Supplied by vendor.
4 Adapters.
5 Wires tied back and insulated.
6 FAA RMS.
7 Power Monitor Filter 2A1FL1/5FL2 and/or 2A1FL2/105FL2 installed.
8 Used on redundant systems only.

Table 7-2. Running Wire List - Cont.

| Conductor No. | Conductor Aux. | FROM | TO |
|---|---|---|---|
| | | W38 | |
| | | UD31J7 (P1) | UD1TB3 DIAL LINES (P2) |
| 25 | 1 | P1-25 | P2-25 |
| 25 | 2 | P1-50 | P2-50 |
| SHLD | | P1-GND | SHLD |
| SHLD | A | SHLD | E101 |
| 26 | | E101 | P2-GND |

1 Site dependent.
2 Used for testing only. Disconnected when not in use.
3 Supplied by vendor.
4 Adapters.
5 Wires tied back and insulated.
6 FAA RMS.
7 Power Monitor Filter 2A1FL1/5FL2 and/or 2A1FL2/105FL2 installed.
8 Used on redundant systems only.

Table 7-2. Running Wire List

| Conductor No. | Conductor Aux. | FROM | | TO |
|---|---|---|---|---|
| | | | W40 | |
| | | UD5J11 (P1) | | UD19J1 (P2) |
| 1 | 1 | P1-1 | | P2-1 |
| 1 | 2 | P1-9 | | P2-2 |
| | SHLD | SHLD B | | E101 |
| | | E101 | | P2-3 |
| 2 | 1 | P1-2 | | P2-4 |
| 2 | 2 | P1-10 | | P2-5 |
| | SHLD | SHLD B | | E102 |
| | | E102 | | P2-6 |
| 3 | 1 | | | |
| 3 | 2 | | | |
| | SHLD | | | |
| | | | W42[1] | |
| | | UD1W90P2 (P1) | | UD11A10J1 (P2) or UD20A10J1 (P2) |
| | | | W43[1] | |
| | | UD1W91P2 (P1) | | UD11A11J1 (P2) or UD20A11J1 (P2) |
| | | | W44 | |
| | | UD70/170J1 (P1) | | UD1TB3-LEASED LINES (P2) |
| 1 | 1 | P1-1 | | P2-1 |
| 1 | 2 | P1-26 | | P2-6 |
| 2 | 1 | P1-2 | | P2-2 |
| 2 | 2 | P1-27 | | P2-27 |
| 3 | 1 | P1-3 | | P2-3 |

1 Site dependent.
2 Used for testing only. Disconnected when not in use.
3 Supplied by vendor.
4 Adapters.
5 Wires tied back and insulated.
6 FAA RMS.
7 Power Monitor Filter 2A1FL1/5FL2 and/or 2A1FL2/105FL2 installed.
8 Used on redundant systems only.

Table 7-2. Running Wire List - Cont.

| Conductor No. | Conductor Aux. | FROM | TO |
|---|---|---|---|
| | | W44 | |
| | | UD70/170J1 (P1) | UD1TB3-LEASED LINES (P2) |
| 3 | 2 | P1-28 | P2-28 |
| 4 | 1 | P1-4 | P2-4 |
| 4 | 2 | P1-29 | P2-29 |
| 5 | 1 | P1-5 | P2-5 |
| 5 | 2 | P1-30 | P2-30 |
| 6 | 1 | P1-6 | P2-6 |
| 6 | 2 | P1-31 | P2-31 |
| 7 | 1 | P1-7 | P2-7 |
| 7 | 2 | P1-32 | P2-32 |
| 8 | 1 | P1-8 | P2-8 |
| 8 | 2 | P1-33 | P2-33 |
| 9 | 1 | P1-9 | P2-9 |
| 9 | 2 | P1-34 | P2-34 |
| 10 | 1 | P1-10 | P2-10 |
| 10 | 2 | P1-35 | P2-35 |
| 11 | 1 | P1-1 1 | P2-1 1 |
| 11 | 2 | P1-36 | P2-36 |
| 12 | 1 | P1-12 | P2-12 |
| 12 | 2 | P1-37 | P2-37 |
| 13 | 1 | P1-13 | P2-13 |
| 13 | 2 | P1-38 | P2-38 |
| 14 | 1 | P1-14 | P2-14 |
| 14 | 2 | P1-39 | P2-39 |
| 15 | 1 | P1-15 | P2-15 |

1 Site dependent.
2 Used for testing only. Disconnected when not in use.
3 Supplied by vendor.
4 Adapters.
5 Wires tied back and insulated.
6 FAA RMS.
7 Power Monitor Filter 2A1FL1/5FL2 and/or 2A1FL2/105FL2 installed.
8 Used on redundant systems only.

Table 7-2. Running Wire List - Cont.

| Conductor No. | Conductor Aux. | FROM | TO |
|---|---|---|---|
| | | W44 | |
| | | UD70/170J1 (P1) | UD1TB3-LEASED LINES (P2) |
| 15 | 2 | P1-40 | P2-40 |
| 16 | 1 | P1-16 | P2-16 |
| 16 | 2 | P1-41 | P2-41 |
| 17 | 1 | P1-17 | P2-17 |
| 17 | 2 | P1-42 | P2-42 |
| 18 | 1 | P1-18 | P2-18 |
| 18 | 2 | P1-43 | P2-43 |
| 19 | 1 | P1-19 | P2-19 |
| 19 | 2 | P1-44 | P2-44 |
| 20 | 1 | P1-20 | P2-20 |
| 20 | 2 | P1-45 | P2-45 |
| 21 | 1 | P1-21 | P2-21 |
| 21 | 2 | P1-46 | P2-46 |
| 22 | 1 | P1-22 | P2-22 |
| 22 | 2 | P1-47 | P2-47 |
| 23 | 1 | P1-23 | P2-23 |
| 23 | 2 | P1-48 | P2-48 |
| 24 | 1 | P1-24 | P2-24 |
| 24 | 2 | P1-49 | P2-49 |
| 25 | 1 | P1-25 | P2-25 |
| 25 | 2 | P1-50 | P2-50 |
| SHLD | | P1-GND | SHLD |
| SHLD | A | SHLD | E101 |
| 26 | | E101 | P2-GND |

1 Site dependent.
2 Used for testing only. Disconnected when not in use.
3 Supplied by vendor.
4 Adapters.
5 Wires tied back and insulated.
6 FAA RMS.
7 Power Monitor Filter 2A1FL1/5FL2 and/or 2A1FL2/105FL2 installed.
8 Used on redundant systems only.

Table 7-2. Running Wire List

| Conductor No. | Conductor Aux. | FROM | TO |
|---|---|---|---|
| | | W44 | |
| | | UD31J14 (P1) | UD1TB2-LEASED LINES (P2) |
| 1 | 1 | P1-1 | P2-1 |
| 1 | 2 | P1-26 | P2-6 |
| 2 | 1 | P1-2 | P2-2 |
| 2 | 2 | P1-27 | P2-27 |
| 3 | 1 | P1-3 | P2-3 |
| 3 | 2 | P1-28 | P2-28 |
| 4 | 1 | P1-4 | P2-4 |
| 4 | 2 | P1-29 | P2-29 |
| 5 | 1 | P1-5 | P2-5 |
| 5 | 2 | P1-30 | P2-30 |
| 6 | 1 | P1-6 | P2-6 |
| 6 | 2 | P1-31 | P2-31 |
| 7 | 1 | P1-7 | P2-7 |
| 7 | 2 | P1-32 | P2-32 |
| 8 | 1 | P1-8 | P2-8 |
| 8 | 2 | P1-33 | P2-33 |
| 9 | 1 | P1-9 | P2-9 |
| 9 | 2 | P1-34 | P2-34 |
| 10 | 1 | P1-10 | P2-10 |
| 10 | 2 | P1-35 | P2-35 |
| 11 | 1 | P1-1 1 | P2-1 1 |
| 11 | 2 | P1-36 | P2-36 |
| 12 | 1 | P1-12 | P2-12 |
| 12 | 2 | P1-37 | P2-37 |

[1] Site dependent.
[2] Used for testing only. Disconnected when not in use.
[3] Supplied by vendor.
[4] Adapters.
[5] Wires tied back and insulated.
[6] FAA RMS.
[7] Power Monitor Filter 2A1FL1/5FL2 and/or 2A1FL2/105FL2 installed.
[8] Used on redundant systems only.

Table 7-2. Running Wire List - Cont.

| Conductor No. | Conductor Aux. | FROM | TO |
|---|---|---|---|
| | | W44 | |
| | | UD31J14 (P1) | UD1TB2-LEASED LINES (P2) |
| 13 | 1 | P1-13 | P2-13 |
| 13 | 2 | P1-38 | P2-38 |
| 14 | 1 | P1-14 | P2-14 |
| 14 | 2 | P1-39 | P2-39 |
| 15 | 1 | P1-15 | P2-15 |
| 15 | 2 | P1-40 | P2-40 |
| 16 | 1 | P1-16 | P2-16 |
| 16 | 2 | P1-41 | P2-41 |
| 17 | 1 | P1-17 | P2-17 |
| 17 | 2 | P1-42 | P2-42 |
| 18 | 1 | P1-18 | P2-18 |
| 18 | 2 | P1-43 | P2-43 |
| 19 | 1 | P1-19 | P2-19 |
| 19 | 2 | P1-44 | P2-44 |
| 20 | 1 | P1-20 | P2-20 |
| 20 | 2 | P1-45 | P2-45 |
| 21 | 1 | P1-21 | P2-21 |
| 21 | 2 | P1-46 | P2-46 |
| 22 | 1 | P1-22 | P2-22 |
| 22 | 2 | P1-47 | P2-47 |
| 23 | 1 | P1-23 | P2-23 |
| 23 | 2 | P1-48 | P2-48 |
| 24 | 1 | P1-24 | P2-24 |
| 24 | 2 | P1-49 | P2-49 |

1 Site dependent.
2 Used for testing only. Disconnected when not in use.
3 Supplied by vendor.
4 Adapters.
5 Wires tied back and insulated.
6 FAA RMS.
7 Power Monitor Filter 2A1FL1/5FL2 and/or 2A1FL2/105FL2 installed.
8 Used on redundant systems only.

Table 7-2. Running Wire List - Cont.

| Conductor No. | Conductor Aux. | FROM | TO |
|---|---|---|---|
| | | W44 | |
| | | UD31J14 (P1) | UD1TB2-LEASED LINES (P2) |
| 25 | 1 | P1-25 | P2-25 |
| 25 | 2 | P1-50 | P2-50 |
| SHLD | | P1-GND | SHLD |
| SHLD | A | SHLD | E101 |
| 26 | | E101 | P2-GND |
| | | W45 | |
| | | UD70/170J2 (P1) | UD1TB3-DIAL LINES (P2) |
| 1 | 1 | P1-1 | P2-1 |
| 1 | 2 | P1-26 | P2-26 |
| 2 | 1 | P1-2 | P2-2 |
| 2 | 2 | P1-27 | P2-27 |
| 3 | 1 | P1-3 | P2-3 |
| 3 | 2 | P1-28 | P2-28 |
| 4 | 1 | P1-4 | P2-4 |
| 4 | 2 | P1-29 | P2-29 |
| 5 | 1 | P1-5 | P2-5 |
| 5 | 2 | P1-30 | P2-30 |
| 6 | 1 | P1-6 | P2-6 |
| 6 | 2 | P1-31 | P2-31 |
| 7 | 1 | P1-7 | P2-7 |
| 7 | 2 | P1-32 | P2-32 |
| 8 | 1 | P1-8 | P2-8 |
| 8 | 2 | P1-33 | P2-33 |

1 Site dependent.
2 Used for testing only. Disconnected when not in use.
3 Supplied by vendor.
4 Adapters.
5 Wires tied back and insulated.
6 FAA RMS.
7 Power Monitor Filter 2A1FL1/5FL2 and/or 2A1FL2/105FL2 installed.
8 Used on redundant systems only.

Table 7-2. Running Wire List - Cont.

| Conductor No. | Conductor Aux. | FROM | TO |
|---|---|---|---|
| | | W45 | |
| | | UD70/170J2 (P1) | UD1TB3-DIAL LINES (P2) |
| 9 | 1 | P1-9 | P2-9 |
| 9 | 2 | P1-34 | P2-34 |
| 10 | 1 | P1-10 | P2-10 |
| 10 | 2 | P1-35 | P2-35 |
| 11 | 1 | P1-11 | P2-11 |
| 11 | 2 | P1-36 | P2-36 |
| 12 | 1 | P1-12 | P2-12 |
| 12 | 2 | P1-37 | P2-37 |
| 13 | 1 | P1-13 | P2-13 |
| 13 | 2 | P1-38 | P2-38 |
| 14 | 1 | P1-14 | P2-14 |
| 14 | 2 | P1-39 | P2-39 |
| 15 | 1 | P1-15 | P2-15 |
| 15 | 2 | P1-40 | P1-40 |
| 16 | 1 | P1-16 | P2-16 |
| 16 | 2 | P1-41 | P2-41 |
| 17 | 1 | P1-17 | P2-17 |
| 17 | 2 | P1-42 | P2-42 |
| 18 | 1 | P1-18 | P2-18 |
| 18 | 2 | P1-43 | P2-43 |
| 19 | 1 | P1-19 | P2-19 |
| 19 | 2 | P1-44 | P2-44 |
| 20 | 1 | P1-20 | P2-20 |
| 20 | 2 | P1-45 | P2-45 |

[1] Site dependent.
[2] Used for testing only. Disconnected when not in use.
[3] Supplied by vendor.
[4] Adapters.
[5] Wires tied back and insulated.
[6] FAA RMS.
[7] Power Monitor Filter 2A1FL1/5FL2 and/or 2A1FL2/105FL2 installed.
[8] Used on redundant systems only.

Table 7-2. Running Wire List - Cont.

| Conductor No. | Conductor Aux. | FROM | TO |
|---|---|---|---|
| | | W45 UD70/170J2 (P1) | UD1TB3-DIAL LINES (P2) |
| 21 | 1 | P1-21 | P2-21 |
| 21 | 2 | P1-46 | P2-46 |
| 22 | 1 | P1-22 | P2-22 |
| 22 | 2 | P1-47 | P2-47 |
| 23 | 1 | P1-23 | P2-23 |
| 23 | 2 | P1-48 | P2-48 |
| 24 | 1 | P1-24 | P2-24 |
| 24 | 2 | P1-49 | P2-49 |
| 25 | 1 | P1-25 | P2-25 |
| 25 | 2 | P1-50 | P2-50 |
| SHLD | | P1-GND | SHLD |
| SHLD | A | SHLD | E101 |
| 26 | | E101 | P2-GND |
| | | W45 UD31J15 (P1) | UD1TB1-DIAL LINES (P2) |
| 1 | 1 | P1-1 | P2-1 |
| 1 | 2 | P1-26 | P2-26 |
| 2 | 1 | P1-2 | P2-2 |
| 2 | 2 | P1-27 | P2-27 |
| 3 | 1 | P1-3 | P2-3 |
| 3 | 2 | P1-28 | P2-28 |
| 4 | 1 | P1-4 | P2-4 |
| 4 | 2 | P1-29 | P2-29 |

1 Site dependent.
2 Used for testing only. Disconnected when not in use.
3 Supplied by vendor.
4 Adapters.
5 Wires tied back and insulated.
6 FAA RMS.
7 Power Monitor Filter 2A1FL1/5FL2 and/or 2A1FL2/105FL2 installed.
8 Used on redundant systems only.

Table 7-2. Running Wire List - Cont.

| Conductor No. | Conductor Aux. | FROM | TO |
|---|---|---|---|
| | | W45 | |
| | | UD31J15 (P1) | UD1TB1-DIAL LINES (P2) |
| 5 | 1 | P1-5 | P2-5 |
| 5 | 2 | P1-30 | P2-30 |
| 6 | 1 | P1-6 | P2-6 |
| 6 | 2 | P1-31 | P2-31 |
| 7 | 1 | P1-7 | P2-7 |
| 7 | 2 | P1-32 | P2-32 |
| 8 | 1 | P1-8 | P2-8 |
| 8 | 2 | P1-33 | P2-33 |
| 9 | 1 | P1-9 | P2-9 |
| 9 | 2 | P1-34 | P2-34 |
| 10 | 1 | P1-10 | P2-10 |
| 10 | 2 | P1-35 | P2-35 |
| 11 | 1 | P1-1 1 | P2-1 1 |
| 11 | 2 | P1-36 | P2-36 |
| 12 | 1 | P1-12 | P2-12 |
| 12 | 2 | P1-37 | P2-37 |
| 13 | 1 | P1-13 | P2-13 |
| 13 | 2 | P1-38 | P2-38 |
| 14 | 1 | P1-14 | P2-14 |
| 14 | 2 | P1-39 | P2-39 |
| 15 | 1 | P1-15 | P2-15 |
| 15 | 2 | P1-40 | P1-40 |
| 16 | 1 | P1-16 | P2-16 |
| 16 | 2 | P1-41 | P2-41 |

1 Site dependent.
2 Used for testing only. Disconnected when not in use.
3 Supplied by vendor.
4 Adapters.
5 Wires tied back and insulated.
6 FAA RMS.
7 Power Monitor Filter 2A1FL1/5FL2 and/or 2A1FL2/105FL2 installed.
8 Used on redundant systems only.

Table 7-2. Running Wire List - Cont.

| Conductor No. | Conductor Aux. | FROM | TO |
|---|---|---|---|
| | | W45 | |
| | | UD31J15 (P1) | UD1TB1-DIAL LINES (P2) |
| 17 | 1 | P1-17 | P2-17 |
| 17 | 2 | P1-42 | P2-42 |
| 18 | 1 | P1-18 | P2-18 |
| 18 | 2 | P1-43 | P2-43 |
| 19 | 1 | P1-19 | P2-19 |
| 19 | 2 | P1-44 | P2-44 |
| 20 | 1 | P1-20 | P2-20 |
| 20 | 2 | P1-45 | P2-45 |
| 21 | 1 | P1-21 | P2-21 |
| 21 | 2 | P1-46 | P2-46 |
| 22 | 1 | P1-22 | P2-22 |
| 22 | 2 | P1-47 | P2-47 |
| 23 | 1 | P1-23 | P2-23 |
| 23 | 2 | P1-48 | P2-48 |
| 24 | 1 | P1-24 | P2-24 |
| 24 | 2 | P1-49 | P2-49 |
| 25 | 1 | P1-25 | P2-25 |
| 25 | 2 | P1-50 | P2-50 |
| SHLD | | P1-GND | SHLD |
| SHLD | A | SHLD | E101 |
| 26 | | E101 | P2-GND |

1 Site dependent.
2 Used for testing only. Disconnected when not in use.
3 Supplied by vendor.
4 Adapters.
5 Wires tied back and insulated.
6 FAA RMS.
7 Power Monitor Filter 2A1FL1/5FL2 and/or 2A1FL2/105FL2 installed.
8 Used on redundant systems only.

Table 7-2. Running Wire List - Cont.

| Conductor No. | Conductor Aux. | FROM | TO |
|---|---|---|---|
| | | W46[1] | |
| | | UD70/170J3 (P1) | UD1- LEASED LINE 2 (P2) |
| 1 | 1 | P1-1 | P2-1 |
| 1 | 2 | P1-26 | P2-26 |
| 2 | 1 | P1-2 | P2-2 |
| 2 | 2 | P1-27 | P2-27 |
| 3 | 1 | P1-3 | P2-3 |
| 3 | 2 | P1-28 | P2-28 |
| 4 | 1 | P1-4 | P2-4 |
| 4 | 2 | P1-29 | P2-29 |
| 5 | 1 | P1-5 | P2-5 |
| 5 | 2 | P1-30 | P2-30 |
| 6 | 1 | P1-6 | P2-6 |
| 6 | 2 | P1-31 | P2-31 |
| 7 | 1 | P1-7 | P2-7 |
| 7 | 2 | P1-32 | P2-32 |
| 8 | 1 | P1-8 | P2-8 |
| 8 | 2 | P1-33 | P2-33 |
| 9 | 1 | P1-9 | P2-9 |
| 9 | 2 | P1-34 | P2-34 |
| 10 | 1 | P1-10 | P2-10 |
| 10 | 2 | P1-35 | P2-35 |
| 11 | 1 | P1-1 1 | P2-1 1 |
| 11 | 2 | P1-36 | P2-36 |
| 12 | 1 | P1-12 | P2-12 |
| 12 | 2 | P1-37 | P2-37 |

1 Site dependent.
2 Used for testing only. Disconnected when not in use.
3 Supplied by vendor.
4 Adapters.
5 Wires tied back and insulated.
6 FAA RMS.
7 Power Monitor Filter 2A1FL1/5FL2 and/or 2A1FL2/105FL2 installed.
8 Used on redundant systems only.

Table 7-2. Running Wire List - Cont.

| Conductor No. | Conductor Aux. | FROM | TO |
|---|---|---|---|
| | | W46[1] | |
| | | UD70/170J3 (P1) | UD1- LEASED LINE 2 (P2) |
| 13 | 1 | P1-13 | P2-13 |
| 13 | 2 | P1-38 | P2-38 |
| 14 | 1 | P1-14 | P2-14 |
| 14 | 2 | P1-39 | P2-39 |
| 15 | 1 | P1-15 | P2-15 |
| 15 | 2 | P1-40 | P2-40 |
| 16 | 1 | P1-16 | P2-16 |
| 16 | 2 | P1-41 | P2-41 |
| 17 | 1 | P1-17 | P2-17 |
| 17 | 2 | P1-42 | P2-42 |
| 18 | 1 | P1-18 | P2-18 |
| 18 | 2 | P1-43 | P2-43 |
| 19 | 1 | P1-19 | P2-19 |
| 19 | 2 | P1-44 | P2-44 |
| 20 | 1 | P1-20 | P2-20 |
| 20 | 2 | P1-45 | P2-45 |
| 21 | 1 | P1-21 | P2-21 |
| 21 | 2 | P1-46 | P2-46 |
| 22 | 1 | P1-22 | P2-22 |
| 22 | 2 | P1-47 | P2-47 |
| 23 | 1 | P1-23 | P2-23 |
| 23 | 2 | P1-48 | P2-48 |
| 24 | 1 | P1-24 | P2-24 |
| 24 | 2 | P1-49 | P2-49 |

1 Site dependent.
2 Used for testing only. Disconnected when not in use.
3 Supplied by vendor.
4 Adapters.
5 Wires tied back and insulated.
6 FAA RMS.
7 Power Monitor Filter 2A1FL1/5FL2 and/or 2A1FL2/105FL2 installed.
8 Used on redundant systems only.

Table 7-2. Running Wire List - Cont.

| Conductor No. | Conductor Aux. | FROM | TO |
|---|---|---|---|
| | | W46[1] | |
| | | UD70/170J3 (P1) | UD1- LEASED LINE 2 (P2) |
| 25 | 1 | P1-25 | P2-25 |
| 25 | 2 | P1-50 | P2-50 |
| SHLD | | P1-GND | SHLD |
| SHLD | A | SHLD | E101 |
| 26 | | E101 | P2-GND |
| | | W46 | |
| | | UD31J16 (P1) | UD1TB4- LEASED LINES (P2) |
| 1 | 1 | P1-1 | P2-1 |
| 1 | 2 | P1-26 | P2-26 |
| 2 | 1 | P1-2 | P2-2 |
| 2 | 2 | P1-27 | P2-27 |
| 3 | 1 | P1-3 | P2-3 |
| 3 | 2 | P1-28 | P2-28 |
| 4 | 1 | P1-4 | P2-4 |
| 4 | 2 | P1-29 | P2-29 |
| 5 | 1 | P1-5 | P2-5 |
| 5 | 2 | P1-30 | P2-30 |
| 6 | 1 | P1-6 | P2-6 |
| 6 | 2 | P1-31 | P2-31 |
| 7 | 1 | P1-7 | P2-7 |
| 7 | 2 | P1-32 | P2-32 |
| 8 | 1 | P1-8 | P2-8 |
| 8 | 2 | P1-33 | P2-33 |

1 Site dependent.
2 Used for testing only. Disconnected when not in use.
3 Supplied by vendor.
4 Adapters.
5 Wires tied back and insulated.
6 FAA RMS.
7 Power Monitor Filter 2A1FL1/5FL2 and/or 2A1FL2/105FL2 installed.
8 Used on redundant systems only.

Table 7-2. Running Wire List - Cont.

| Conductor No. | Conductor Aux. | FROM | TO |
|---|---|---|---|
| | | W46 | |
| | | UD31J16 (P1) | UD1TB4- LEASED LINES (P2) |
| 9 | 1 | P1-9 | P2-9 |
| 9 | 2 | P1-34 | P2-34 |
| 10 | 1 | P1-10 | P2-10 |
| 10 | 2 | P1-35 | P2-35 |
| 11 | 1 | P1-1 1 | P2-1 1 |
| 11 | 2 | P1-36 | P2-36 |
| 12 | 1 | P1-12 | P2-12 |
| 12 | 2 | P1-37 | P2-37 |
| 13 | 1 | P1-13 | P2-13 |
| 13 | 2 | P1-38 | P2-38 |
| 14 | 1 | P1-14 | P2-14 |
| 14 | 2 | P1-39 | P2-39 |
| 15 | 1 | P1-15 | P2-15 |
| 15 | 2 | P1-40 | P2-40 |
| 16 | 1 | P1-16 | P2-16 |
| 16 | 2 | P1-41 | P2-41 |
| 17 | 1 | P1-17 | P2-17 |
| 17 | 2 | P1-42 | P2-42 |
| 18 | 1 | P1-18 | P2-18 |
| 18 | 2 | P1-43 | P2-43 |
| 19 | 1 | P1-19 | P2-19 |
| 19 | 2 | P1-44 | P2-44 |
| 20 | 1 | P1-20 | P2-20 |
| 20 | 2 | P1-45 | P2-45 |

1 Site dependent.
2 Used for testing only. Disconnected when not in use.
3 Supplied by vendor.
4 Adapters.
5 Wires tied back and insulated.
6 FAA RMS.
7 Power Monitor Filter 2A1FL1/5FL2 and/or 2A1FL2/105FL2 installed.
8 Used on redundant systems only.

Table 7-2. Running Wire List - Cont.

| Conductor No. | Conductor Aux. | FROM | | TO |
|---|---|---|---|---|
| | | UD31J16 (P1) | W46 | UD1TB4- LEASED LINES (P2) |
| 21 | 1 | P1-21 | | P2-21 |
| 21 | 2 | P1-46 | | P2-46 |
| 22 | 1 | P1-22 | | P2-22 |
| 22 | 2 | P1-47 | | P2-47 |
| 23 | 1 | P1-23 | | P2-23 |
| 23 | 2 | P1-48 | | P2-48 |
| 24 | 1 | P1-24 | | P2-24 |
| 24 | 2 | P1-49 | | P2-49 |
| 25 | 1 | P1-25 | | P2-25 |
| 25 | 2 | P1-50 | | P2-50 |
| SHLD | | P1-GND | | SHLD |
| SHLD | A | SHLD | | E101 |
| 26 | | E101 | | P2-GND |
| | | UD1W96P2 (P1) | W48 | UD40A1J1 (P2) |
| | | UD1W97P2 (P1) | W49 | UD40A2J1 (P2) |
| | | UD2W5P1 (P1) | W53[1] | UD1W55P2 (P2) |
| | | UD2W6P1 (P1) | W54[1] | UD1W56P2 (P2) |
| | | UD4J16 (P1) | W55 | UD1W53P2 (P2) |

1 Site dependent.
2 Used for testing only. Disconnected when not in use.
3 Supplied by vendor.
4 Adapters.
5 Wires tied back and insulated.
6 FAA RMS.
7 Power Monitor Filter 2A1FL1/5FL2 and/or 2A1FL2/105FL2 installed.
8 Used on redundant systems only.

Table 7-2. Running Wire List - Cont.

| Conductor No. | Conductor Aux. | FROM | | TO |
|---|---|---|---|---|
| | | | W56 | |
| | | UD4J15 (P1) | | UD1W54P2 (P2) |
| | | | W57/157 | |
| | | UD1AT10/110 (P1) | | UD1WG12/112J2 (P2) |
| | | | W58/158 | |
| | | UD1AT11/111 (P1) | | UD3/103DC1J1 (P2) |
| | | | W59/159 | |
| | | UD3/103J4 (P1) | | UD4/104J19 (P2) |
| | | | W60/160 | |
| | | UD3/103J5 (P1) | | UD4/104J17 (P2) |
| | | | W61/161 | |
| | | UD1AT4/104 (P1) | | UD4/104J18 (P2) |
| | | | W62[1] | |
| | | UD5J10 (P2) | | UD1S1J1 (P1)<br>UD1S2J1 (P3) |
| 1 | | P2-1 | | E101 |
| 2 | | P2-9 | | E101 |
| 3 | | P2-2 | | E102 |
| 4 | | P2-10 | | E102 |
| 5 | | P2-1 1 | | P1-D |
| 6 | | P2-4 | | E104 |
| 7 | | P2-12 | | P1-F |
| 8 | | P2-5 | | P1-G |
| 9 | | P2-13 | | P1-H |
| 10 | | P2-6 | | E105 |
| 11 | | P2-3 | | P1-C |
| 12 | | P2-7 | | P1-K |

1 Site dependent.
2 Used for testing only. Disconnected when not in use.
3 Supplied by vendor.
4 Adapters.
5 Wires tied back and insulated.
6 FAA RMS.
7 Power Monitor Filter 2A1FL1/5FL2 and/or 2A1FL2/105FL2 installed.
8 Used on redundant systems only.

Table 7-2. Running Wire List - Cont.

| Conductor No. | Conductor Aux. | FROM | TO |
|---|---|---|---|
| | | W62[1] | |
| | | UD5J10 (P2) | UD1S1J1 (P1)<br>UD1S2J1 (P3) |
| 13 | | P2-8 | P1-L |
| 14 | | P2-14 | NC |
| 15 | | P2-15 | NC |
| SHLD | A | SHLD | P1-GND |
| SHLD | B | SHLD | P2-GND |
| 16 | 1 | E101 | P3-A |
| 16 | 2 | E102 | P3-B |
| 17 | 1 | E104 | P3-E |
| 17 | 2 | E105 | P3-J |
| 18 | 1 | P1-E | E106 |
| 18 | 2 | P1-J | P3-H |
| SHLD | B | SHLD | E103 |
| 19 | | E103 | P3-GND |
| 20 | | E106 | P3-D |
| 21 | | E106 | P3-F |
| 22 | | E101 | P1-A |
| 23 | | E102 | P1-B |
| | | W63 | |
| | | UD5J11 (P1) | UD1A28 |
| 1 | 1 | P1-1 | A28-2 |
| 1 | 2 | P1-9 | A28-4 |
| | SHLD | P1-GND | NC |
| 2 | 1 | P1-10 | A28-6 |
| 2 | 2 | P1-2 | A28-8 |

1 Site dependent.
2 Used for testing only. Disconnected when not in use.
3 Supplied by vendor.
4 Adapters.
5 Wires tied back and insulated.
6 FAA RMS.
7 Power Monitor Filter 2A1FL1/5FL2 and/or 2A1FL2/105FL2 installed.
8 Used on redundant systems only.

Table 7-2. Running Wire List - Cont.

| Conductor No. | Conductor Aux. | FROM | TO |
|---|---|---|---|
| | | W63 | |
| | | UD5J11 (P1) | UD1A28 |
| | SHLD | P1-GND | NC |
| SHLD | | P1-GND | NC |
| | | W64 | |
| | | UD1 TELCO (P1) | UD1A28 |
| 1 | | P1-1 | A28-9 |
| 2 | | P1-2 | A28-7 |
| 3 | | P1-3 | NC |
| 4 | | P1-4 | A28-5 |
| 5 | | P1-5 | A28-3 |
| 6 | | P1-6 | NC |
| 7 | | P1-7 | NC |
| 8 | | P1-8 | NC |
| | | W65/165 | |
| | | UD5/105J29 (P1) | RDA J-BOX (P2) |
| 1 | | P1-A | LINE |
| 2 | | P1-B | NEUTRAL |
| SHLD | B | E101 | SHLD |
| 3 | | P1-GND | E101 |
| | | W74/174 | |
| | | UD3/103J7 (P1) | UD5/105J17 (P2) |
| | | W75/175 | |
| | | UD3/103J6 (P1) | UD1AT9 BNC-TEE (P2) |

1 Site dependent.
2 Used for testing only. Disconnected when not in use.
3 Supplied by vendor.
4 Adapters.
5 Wires tied back and insulated.
6 FAA RMS.
7 Power Monitor Filter 2A1FL1/5FL2 and/or 2A1FL2/105FL2 installed.
8 Used on redundant systems only.

Table 7-2. Running Wire List - Cont.

| Conductor No. | Conductor Aux. | FROM | TO |
|---|---|---|---|
| | | W76/176 | |
| | | UD1CR1/101 (P1) | UD1CR2/102 BNC-TEE (P2) |
| | | W80[2] | |
| | | UD1 PED SYNCH TEST (P1) | UD2A1 PED SYNCH TEST (P2) |
| | | W83/183 | |
| | | UD1FL4/104 INPUT (P1) | UD7A3/29[1] SEC PDP |
| 1 | | P1-A | CB22 BØ |
| 2 | | P1-D | NEUTRAL BUS |
| 3 | | P1-E | GROUND BUS |
| | | W84/184 | |
| | | UD1FL1/101 INPUT (P1) | UD7A3/29[1]/30[1] SEC PDP |
| | | Single Channel Systems | |
| | | FL1P1 | UD7A3 CB15, 17, 19, N, G |
| | | NWS Redundant Systems | |
| | | FL101P1 (CH1) | UD7A30 CB9, 11, 13, N, G |
| | | FL1P1 (CH2) | UD7A30 CB15, 17, 19, N, G |
| | | FAA Redundant Systems | |
| | | FL101P1 (CH1) | UD7A3 CB15, 17, 19, N, G |
| | | FL1P1 (CH2) | UD7A29 CB15, 17, 19, N, G |

1 Site dependent.
2 Used for testing only. Disconnected when not in use.
3 Supplied by vendor.
4 Adapters.
5 Wires tied back and insulated.
6 FAA RMS.
7 Power Monitor Filter 2A1FL1/5FL2 and/or 2A1FL2/105FL2 installed.
8 Used on redundant systems only.

Table 7-2. Running Wire List - Cont.

| Conductor No. | Conductor Aux. | FROM | TO |
|---|---|---|---|
| | | W85/185 | |
| | | UD1FL2/102 INPUT (P1) | UD7A3/29[1]/30[1] SEC PDP |
| | | Single Channel Systems | |
| | | FL2P1 | UD7A3 CB2, 4, 6, N, G |
| | | NWS Redundant Systems | |
| | | FL2P1 (CH2) | UD7A30 CB2, 4, 6, N, G |
| | | FAA Redundant Systems | |
| | | FL2P1 (CH2) | UD7A29 CB2, 4, 6, N, G |
| | | W86/186 | |
| | | UD1FL3/103 INPUT P1 | UD7A3/29[1] SEC PDP |
| | | FL3/103P1 | UD7A3/29[1]/30[1] CB16, 18, N, G |
| | | W87/187 | |
| | | UD1FL5/105 INPUT P1 | UD7A3/29[1]/30[1] SEC PDP |
| | | FL5/105P1 | UD7A3/29[1] CB8, N, G |
| | | | UD7A30[1] CB8, N, G |
| | | | UD7A30[1] CB10, N, G |
| | | Vendor Cable | |
| | | W9/109 Junction | UD7A3/29[1] SEC PDP |
| | | | UD7A3/29 CB25, 27, 29, N, G |

1 Site dependent.
2 Used for testing only. Disconnected when not in use.
3 Supplied by vendor.
4 Adapters.
5 Wires tied back and insulated.
6 FAA RMS.
7 Power Monitor Filter 2A1FL1/5FL2 and/or 2A1FL2/105FL2 installed.
8 Used on redundant systems only.

Table 7-2. Running Wire List - Cont.

| Conductor No. | Conductor Aux. | FROM | TO |
|---|---|---|---|
| | | W88/188 | |
| | | UD1FL5/105 - OUTPUT | UD6/106TB1 |
| 1 | | FL5/105-N (OUTPUT) | TB1-A6 |
| 2 | | FL5/105-L (OUTPUT) | TB1-A7 |
| 3 | | FL5/105-GND (OUTPUT) | TB1-A4 |
| | | W90 | |
| | | UD19J4 (P1) | UD1W42P1 (P2) |
| | | W91 | |
| | | UD19J5 (P1) | UD1W43P1 (P2) |
| 1 | 1 | P1-15 | P2-7 |
| 1 | 2 | P1-1 1 | P2-2 |
| 2 | 1 | P1-14 | P2-3 |
| 2 | 2 | | |
| 3 | 1 | P1-1 | P2-16 |
| 3 | 2 | P1-2 | P2-6 |
| 4 | 1 | P1-12 | P2-20 |
| 4 | 2 | | |
| 5 | 1 | P1-6 | P2-14 |
| 5 | 2 | P1-8 | P2-19 |
| SHLD | | P1-GND | P2-GND |
| 6 | | P1-4 | P1-12 |
| 7 | | P1-3 | P1-13 |
| 8 | | P2-1 | P2-7 |
| 9 | | P2-4 | P2-5 |
| 10 | | P2-6 | P2-8 |

1 Site dependent.
2 Used for testing only. Disconnected when not in use.
3 Supplied by vendor.
4 Adapters.
5 Wires tied back and insulated.
6 FAA RMS.
7 Power Monitor Filter 2A1FL1/5FL2 and/or 2A1FL2/105FL2 installed.
8 Used on redundant systems only.

Table 7-2. Running Wire List - Cont.

| Conductor No. | Conductor Aux. | FROM | TO |
|---|---|---|---|
| | | W95/195[6] | |
| | | UD70/170J17 (P1) | UD5/105J25 (P2) |
| 1 | 1 | P1-15 | P2-7 |
| 1 | 2 | P1-1 1 | P2-2 |
| 2 | 1 | P1-14 | P2-3 |
| 2 | 2 | | |
| 3 | 1 | P1-1 | P2-16 |
| 3 | 2 | P1-2 | P2-6 |
| 4 | 1 | P1-12 | P2-20 |
| 4 | 2 | | |
| 5 | 1 | P1-6 | P2-14 |
| 5 | 2 | P1-8 | P2-19 |
| SHLD | | P1-GND | P2-GND |
| 6 | | P1-4 | P1-12 |
| 7 | | P1-3 | P1-13 |
| 8 | | P2-1 | P2-7 |
| 9 | | P2-4 | P2-5 |
| 10 | | P2-6 | P2-8 |
| | | W96 | |
| | | UD39J4 (P1) | UD1W48P1 (P2) |
| | | W97 | |
| | | UD39J5 (P1) | UD1W49P1 (P2) |
| | | W100 | |
| | | UD105J12 (P1) | UD5J12 (P2) |
| 1 | 1 | P1-1 | P2-1 |
| 1 | 2 | P1-2 | P2-2 |
| | SHLD | P1-GND | N/C |

1 Site dependent.
2 Used for testing only. Disconnected when not in use.
3 Supplied by vendor.
4 Adapters.
5 Wires tied back and insulated.
6 FAA RMS.
7 Power Monitor Filter 2A1FL1/5FL2 and/or 2A1FL2/105FL2 installed.
8 Used on redundant systems only.

Table 7-2. Running Wire List - Cont.

| Conductor No. | Conductor Aux. | FROM | TO |
|---|---|---|---|
| | | W100 | |
| | | UD105J12 (P1) | UD5J12 (P2) |
| 2 | 1 | P1-16 | P2-16 |
| 2 | 2 | P1-4 | P2-4 |
| | SHLD | P1-GND | N/C |
| 3 | 1 | P1-3 | P2-3 |
| 3 | 2 | P1-7 | P2-7 |
| | SHLD | P1-GND | N/C |
| 4 | 1 | P1-13 | P2-6 |
| 4 | 2 | P1-19 | P2-10 |
| | SHLD | P1-GND | N/C |
| 5 | 1 | P1-44 | P2-5 |
| 5 | 2 | P1-42 | P2-17 |
| | SHLD | P1-GND | N/C |
| 6 | 1 | P1-14 | P2-14 |
| 6 | 2 | P1-15 | P2-15 |
| | SHLD | P1-GND | N/C |
| 7 | 1 | P1-6 | P2-13 |
| 7 | 2 | P1-10 | P2-19 |
| | SHLD | P1-GND | N/C |
| 8 | 1 | P1-1 1 | P2-1 1 |
| 8 | 2 | P1-41 | P2-41 |
| | SHLD | P1-GND | N/C |
| 9 | 1 | P1-20 | P2-20 |
| 9 | 2 | P1-23 | P2-23 |
| | SHLD | P1-GND | N/C |
| 10 | 1 | P1-22 | P2-22 |

[1] Site dependent.
[2] Used for testing only. Disconnected when not in use.
[3] Supplied by vendor.
[4] Adapters.
[5] Wires tied back and insulated.
[6] FAA RMS.
[7] Power Monitor Filter 2A1FL1/5FL2 and/or 2A1FL2/105FL2 installed.
[8] Used on redundant systems only.

Table 7-2. Running Wire List - Cont.

| Conductor No. | Conductor Aux. | FROM | TO |
|---|---|---|---|
| | | W100 | |
| | | UD105J12 (P1) | UD5J12 (P2) |
| 10 | 2 | P1-25 | P2-25 |
| | SHLD | P1-GND | N/C |
| 11 | 1 | P1-26 | P2-26 |
| 11 | 2 | P1-29 | P2-29 |
| | SHLD | P1-GND | N/C |
| 12 | 1 | P1-27 | P2-27 |
| 12 | 2 | P1-30 | P2-30 |
| | SHLD | P1-GND | N/C |
| 13 | 1 | P1-46 | P2-28 |
| 13 | 2 | P1-45 | P2-31 |
| | SHLD | P1-GND | N/C |
| 14 | 1 | P1-32 | P2-32 |
| 14 | 2 | P1-35 | P2-35 |
| | SHLD | P1-GND | N/C |
| 15 | 1 | P1-33 | P2-33 |
| 15 | 2 | P1-34 | P2-34 |
| | SHLD | P1-GND | N/C |
| 16 | 1 | P1-36 | P2-36 |
| 16 | 2 | P1-37 | P2-37 |
| | SHLD | P1-GND | N/C |
| 17 | 1 | P1-38 | P2-38 |
| 17 | 2 | P1-39 | P2-39 |
| | SHLD | P1-GND | N/C |
| 18 | 1 | P1-28 | P2-46 |
| 18 | 2 | P1-31 | P2-45 |

1 Site dependent.
2 Used for testing only. Disconnected when not in use.
3 Supplied by vendor.
4 Adapters.
5 Wires tied back and insulated.
6 FAA RMS.
7 Power Monitor Filter 2A1FL1/5FL2 and/or 2A1FL2/105FL2 installed.
8 Used on redundant systems only.

Table 7-2. Running Wire List - Cont.

| Conductor No. | Conductor Aux. | FROM | TO |
|---|---|---|---|
| | | W100 | |
| | | UD105J12 (P1) | UD5J12 (P2) |
| | SHLD | P1-GND | N/C |
| 19 | 1 | P1-47 | P2-48 |
| 19 | 2 | P1-48 | P2-47 |
| | SHLD | P1-GND | N/C |
| 20 | 1 | P1-49 | P2-49 |
| 20 | 2 | P1-50 | P2-50 |
| | SHLD | P1-GND | N/C |
| 21 | 1 | P1-40 | P2-40 |
| 21 | 2 | P1-43 | P2-18 |
| | SHLD | P1-GND | N/C |
| 22 | 1 | P1-21 | P2-21 |
| 22 | 2 | P1-24 | P2-24 |
| | SHLD | P1-GND | N/C |
| 23 | 1 | P1-8 | P2-8 |
| 23 | 2 | P1-9 | P2-9 |
| | SHLD | P1-GND | N/C |
| 24 | 1 | P1-12 | P2-12 |
| 24 | 2 | P1-17 | P2-42 |
| | SHLD | P1-GND | N/C |
| 25 | 1 | P1-18 | P2-43 |
| 25 | 2 | P1-5 | P2-44 |
| | SHLD | P1-GND | N/C |
| SHLD | | P1-GND | N/C |

1 Site dependent.
2 Used for testing only. Disconnected when not in use.
3 Supplied by vendor.
4 Adapters.
5 Wires tied back and insulated.
6 FAA RMS.
7 Power Monitor Filter 2A1FL1/5FL2 and/or 2A1FL2/105FL2 installed.
8 Used on redundant systems only.

Table 7-2. Running Wire List - Cont.

| Conductor No. | Conductor Aux. | FROM | TO |
|---|---|---|---|
| | | W110 | |
| | | UD2A1(A3)J5 (P1) | UD4J2 (P2) (Red. CH2) |
| 1 | 1 | P1-A | P2-1 |
| 1 | 2 | P1-B | P2-20 |
| | SHLD | NC | P2-GND |
| 2 | 1 | P1-D | P2-2 |
| 2 | 2 | P1-E | P2-21 |
| | SHLD | P1-C | P2-GND |
| 3 | 1 | P1-a | P2-4 |
| 3 | 2 | P1-b | P2-22 |
| | SHLD | NC | P2-GND |
| 4 | 1 | P1-H | P2-5 |
| 4 | 2 | P1-J | P2-23 |
| | SHLD | NC | P2-GND |
| 5 | 1 | P1-g | P2-6 |
| 5 | 2 | P1-h | P2-25 |
| | SHLD | NC | P2-GND |
| 6 | 1 | P1-M | P2-7 |
| 6 | 2 | P1-U | P2-26 |
| | SHLD | NC | P2-GND |
| 7 | 1 | P1-N | P2-8 |
| 7 | 2 | P1-Y | P2-27 |
| | SHLD | NC | P2-GND |
| 8 | 1 | P1-F | P2-9 |
| 8 | 2 | P1-G | P2-28 |
| | SHLD | NC | P2-GND |
| 9 | 1 | P1-S | P2-10 |

1 Site dependent.
2 Used for testing only. Disconnected when not in use.
3 Supplied by vendor.
4 Adapters.
5 Wires tied back and insulated.
6 FAA RMS.
7 Power Monitor Filter 2A1FL1/5FL2 and/or 2A1FL2/105FL2 installed.
8 Used on redundant systems only.

Table 7-2. Running Wire List - Cont.

| Conductor No. | Conductor Aux. | FROM | TO |
|---|---|---|---|
| | | W110 | |
| | | UD2A1(A3)J5 (P1) | UD4J2 (P2) (Red. CH2) |
| 9 | 2 | P1-T | P2-29 |
| | SHLD | NC | P2-GND |
| 10 | 1 | P1-V | P2-1 1 |
| 10 | 2 | P1-W | P2-30 |
| | SHLD | NC | P2-GND |
| 11 | 1 | P1-X | P2-12 |
| 11 | 2 | P1-c | P2-31 |
| | SHLD | NC | P2-GND |
| 12 | 1 | P1-R | P2-13 |
| 12 | 2 | P1-P | P2-32 |
| | SHLD | NC | P2-GND |
| 13 | 1 | NC | NC |
| 13 | 2 | NC | NC |
| | SHLD | NC | NC |
| 14 | 1 | NC | NC |
| 14 | 2 | NC | NC |
| | SHLD | NC | NC |
| 15 | 1 | NC | NC |
| 15 | 2 | NC | NC |
| | SHLD | NC | NC |
| 16 | 1 | NC | NC |
| 16 | 2 | NC | NC |
| | SHLD | NC | NC |
| 17 | 1 | NC | NC |
| 17 | 2 | NC | NC |

1 Site dependent.
2 Used for testing only. Disconnected when not in use.
3 Supplied by vendor.
4 Adapters.
5 Wires tied back and insulated.
6 FAA RMS.
7 Power Monitor Filter 2A1FL1/5FL2 and/or 2A1FL2/105FL2 installed.
8 Used on redundant systems only.

Table 7-2. Running Wire List - Cont.

| Conductor No. | Conductor Aux. | FROM | TO |
|---|---|---|---|
| | | W110 | |
| | | UD2A1(A3)J5 (P1) | UD4J2 (P2) (Red. CH2) |
| | SHLD | NC | NC |
| 18 | 1 | NC | NC |
| 18 | 2 | NC | NC |
| | SHLD | NC | NC |
| 19 | 1 | NC | NC |
| 19 | 2 | NC | NC |
| | SHLD | NC | NC |
| SHLD | | NC | P2-19 |
| SHLD | | NC | P2-GND |
| | | W111 | |
| | | UD70CP7 (P1) | TELCO Surge Suppressor/Phone Co. Demarc or CSU (P2) (For remote BDDS connection only.) |
| 1 | 1 | P1-5 | DEMARC - CSU transmit out. |
| 1 | 2 | P1-4 | DEMARC - CSU transmit out. |
| 2 | 1 | P1-2 | DEMARC - CSU receive in. |
| 2 | 2 | P1-1 | DEMARC - CSU receive in. |
| 3 | 1 | SPARE | |
| 3 | 2 | SPARE | |

1 Site dependent.
2 Used for testing only. Disconnected when not in use.
3 Supplied by vendor.
4 Adapters.
5 Wires tied back and insulated.
6 FAA RMS.
7 Power Monitor Filter 2A1FL1/5FL2 and/or 2A1FL2/105FL2 installed.
8 Used on redundant systems only.

Table 7-2. Running Wire List - Cont.

| Conductor No. | Conductor Aux. | FROM | TO |
|---|---|---|---|
| | | W111 | |
| | | UD70CP7 (P1) | TELCO Surge Suppressor/Phone Co. Demarc or CSU (P2) (For remote BDDS connection only.) |
| 4 | 1 | SPARE | |
| 4 | 2 | SPARE | |
| | | W112 | |
| | | TELCO Surge Suppressor/Phone Co. Demarc or CSU (P1) | UD31J25 (P2) with RJ-45 to DB15(F) adapter. Pinouts shown after passing through adapter to DB15(F) on P2 side. |
| 1 | 1 | P1 -1 To Demarc, CSU RD in | P2-2 |
| 1 | 2 | P1 -2 To Demarc, CSU RD in | P2-10 |
| 2 | 1 | P1 -4 To Demarc, CSU TD out | P2-9 |
| 2 | 2 | P1 -5 To Demarc, CSU TD out | P2-1 |
| 3 | 1 | SPARE | |
| 3 | 2 | SPARE | |
| 4 | 1 | SPARE | |
| 4 | 2 | SPARE | |
| | | W130 | |
| | | UD5J6 (P1) (Red. CH2) | UD7A1J2 (P2) |
| 1 | 1 | P1-1 | P2-1 |

1 Site dependent.
2 Used for testing only. Disconnected when not in use.
3 Supplied by vendor.
4 Adapters.
5 Wires tied back and insulated.
6 FAA RMS.
7 Power Monitor Filter 2A1FL1/5FL2 and/or 2A1FL2/105FL2 installed.
8 Used on redundant systems only.

Table 7-2. Running Wire List - Cont.

| Conductor No. | Conductor Aux. | FROM | TO |
|---|---|---|---|
| | | W130 | |
| | | UD5J6 (P1) (Red. CH2) | UD7A1J2 (P2) |
| 1 | 2 | P1-18 | P2-18 |
| | SHLD | P1-GND | N/C |
| 2 | 1 | P1-35 | P2-35 |
| 2 | 2 | P1-3 | P2-3 |
| | SHLD | P1-GND | N/C |
| 3 | 1 | P1-20 | P2-20 |
| 3 | 2 | P1-4 | P2-4 |
| | SHLD | P1-GND | N/C |
| 4 | 1 | P1-37 | P2-37 |
| 4 | 2 | P1-5 | P2-5 |
| | SHLD | P1-GND | N/C |
| 5 | 1 | P1-22 | P2-22 |
| 5 | 2 | P1-39 | P2-39 |
| | SHLD | P1-GND | N/C |
| 6 | 1 | P1-7 | P2-7 |
| 6 | 2 | P1-40 | P2-40 |
| | SHLD | P1-GND | N/C |
| 7 | 1 | P1-24 | P2-24 |
| 7 | 2 | P1-8 | P2-8 |
| | SHLD | P1-GND | N/C |
| 8 | 1 | P1-41 | P2-41 |
| 8 | 2 | P1-25 | P2-25 |
| | SHLD | P1-GND | N/C |
| 9 | 1 | P1-9 | P2-9 |
| 9 | 2 | P1-42 | P2-42 |

1 Site dependent.
2 Used for testing only. Disconnected when not in use.
3 Supplied by vendor.
4 Adapters.
5 Wires tied back and insulated.
6 FAA RMS.
7 Power Monitor Filter 2A1FL1/5FL2 and/or 2A1FL2/105FL2 installed.
8 Used on redundant systems only.

Table 7-2. Running Wire List - Cont.

| Conductor No. | Conductor Aux. | FROM | TO |
|---|---|---|---|
| | | W130 | |
| | | UD5J6 (P1) (Red. CH2) | UD7A1J2 (P2) |
| | SHLD | P1-GND | N/C |
| 10 | 1 | P1-26 | P2-26 |
| 10 | 2 | P1-10 | P2-10 |
| | SHLD | P1-GND | N/C |
| 11 | 1 | P1-43 | P2-43 |
| 11 | 2 | P1-27 | P2-27 |
| | SHLD | P1-GND | P2-34 |
| 12 | 1 | P1-1 1 | P2-1 1 |
| 12 | 2 | P1-44 | P2-44 |
| | SHLD | P1-GND | P2-36 |
| 13 | 1 | P1-28 | P2-28 |
| 13 | 2 | P1-12 | P2-12 |
| | SHLD | P1-GND | P2-2 |
| 14 | 1 | P1-45 | P2-45 |
| 14 | 2 | P1-29 | P2-29 |
| | SHLD | P1-GND | P2-38 |
| 15 | 1 | P1-13 | P2-13 |
| 15 | 2 | P1-46 | P2-46 |
| | SHLD | P1-GND | P2-21 |
| 16 | 1 | P1-30 | P2-30 |
| 16 | 2 | P1-14 | P2-14 |
| | SHLD | P1-GND | P2-6 |
| 17 | 1 | P1-48 | P2-48 |
| 17 | 2 | P1-32 | P2-32 |
| | SHLD | P1-GND | N/C |

1 Site dependent.
2 Used for testing only. Disconnected when not in use.
3 Supplied by vendor.
4 Adapters.
5 Wires tied back and insulated.
6 FAA RMS.
7 Power Monitor Filter 2A1FL1/5FL2 and/or 2A1FL2/105FL2 installed.
8 Used on redundant systems only.

Table 7-2. Running Wire List - Cont.

| Conductor No. | Conductor Aux. | FROM | TO |
|---|---|---|---|
| | | W130 | |
| | | UD5J6 (P1) (Red. CH2) | UD7A1J2 (P2) |
| 18 | 1 | P1-16 | P2-16 |
| 18 | 2 | P1-49 | P2-49 |
| | SHLD | P1-GND | N/C |
| 19 | 1 | P1-17 | P2-17 |
| 19 | 2 | P1-33 | P2-33 |
| | SHLD | P1-GND | N/C |
| SHLD | | P1-GND | P2-GND |
| | | W131 | |
| | | UD5J5 (P1) (Red. CH2) | UD10A9J2 (P2) |
| 1 | 1 | P1-1 | P2-1 |
| 1 | 2 | P1-34 | P2-34 |
| | SHLD | P1-GND | P2-47 |
| 2 | 1 | P1-18 | P1-18 |
| 2 | 2 | P1-2 | P2-2 |
| | SHLD | P1-GND | P2-48 |
| 3 | 1 | P1-5 | P2-5 |
| 3 | 2 | P1-38 | P2-38 |
| | SHLD | P1-GND | SHLD |
| 4 | 1 | P1-22 | P2-22 |
| 4 | 2 | P1-6 | P2-6 |
| | SHLD | P1-GND | SHLD |
| 5 | 1 | P1-39 | P2-39 |
| 5 | 2 | P1-23 | P2-23 |
| | SHLD | P1-GND | SHLD |
| 6 | 1 | P1-7 | P2-7 |

1 Site dependent.
2 Used for testing only. Disconnected when not in use.
3 Supplied by vendor.
4 Adapters.
5 Wires tied back and insulated.
6 FAA RMS.
7 Power Monitor Filter 2A1FL1/5FL2 and/or 2A1FL2/105FL2 installed.
8 Used on redundant systems only.

Table 7-2. Running Wire List - Cont.

| Conductor No. | Conductor Aux. | FROM | TO |
|---|---|---|---|
| | | W131<br>UD5J5 (P1) (Red. CH2) | UD10A9J2 (P2) |
| 6 | 2 | P1-40 | P2-40 |
| | SHLD | P1-GND | SHLD |
| 7 | 1 | P1-24 | P2-24 |
| 7 | 2 | P1-8 | P2-8 |
| | SHLD | P1-GND | SHLD |
| 8 | 1 | P1-41 | P2-41 |
| 8 | 2 | P1-25 | P2-25 |
| | SHLD | P1-GND | SHLD |
| 9 | 1 | P1-9 | P2-9 |
| 9 | 2 | P1-42 | P2-42 |
| | SHLD | P1-GND | SHLD |
| 10 | 1 | P1-26 | P2-26 |
| 10 | 2 | P1-10 | P2-10 |
| | SHLD | P1-GND | SHLD |
| 11 | 1 | P1-15 | P2-15 |
| 11 | 2 | P1-31 | P2-31 |
| | SHLD | P1-GND | SHLD |
| 12 | 1 | P1-43 | P2-43 |
| 12 | 2 | P1-27 | P2-27 |
| | SHLD | P1-GND | SHLD |
| 13 | 1 | P1-28 | P2-28 |
| 13 | 2 | P1-12 | P2-12 |
| | SHLD | P1-GND | SHLD |
| 14 | 1 | P1-1 1 | P2-1 1 |
| 14 | 2 | P1-44 | P2-44 |

1 Site dependent.
2 Used for testing only. Disconnected when not in use.
3 Supplied by vendor.
4 Adapters.
5 Wires tied back and insulated.
6 FAA RMS.
7 Power Monitor Filter 2A1FL1/5FL2 and/or 2A1FL2/105FL2 installed.
8 Used on redundant systems only.

Table 7-2. Running Wire List - Cont.

| Conductor No. | Conductor Aux. | FROM | TO |
|---|---|---|---|
| | | W131 | |
| | | UD5J5 (P1) (Red. CH2) | UD10A9J2 (P2) |
| | SHLD | P1-GND | SHLD |
| 15 | 1 | P1-13 | P2-13 |
| 15 | 2 | P1-14 | P2-14 |
| | SHLD | P1-GND | SHLD |
| 16 | 1 | P1-30 | P2-30 |
| 16 | 2 | P1-29 | P2-29 |
| | SHLD | P1-GND | SHLD |
| 17 | 1 | P1-17 | P2-17 |
| 17 | 2 | P1-33 | P2-33 |
| | SHLD | P1-GND | SHLD |
| 18 | 1 | P1-16 | P2-16 |
| 18 | 2 | P1-32 | P2-32 |
| | SHLD | P1-GND | SHLD |
| SHLD | | P1-GND | SHLD |
| | | W153 | |
| | | UD2W14P1 (P1) | UD1W155P2 (P2) |
| | | W154 | |
| | | UD2W15P1 (P1) | UD1W156P2 (P2) |
| | | W155 | |
| | | UD104J16 (P1) | UD1W153P2 (P2) |
| | | W156 | |
| | | UD104J15 (P1) | UD1W154P2 (P2) |
| | | W162 | |
| | | UD70J1 (P1) | UD31J3 (P2) |
| 1 | 1 | P1-1 | P2-1 |

1 Site dependent.
2 Used for testing only. Disconnected when not in use.
3 Supplied by vendor.
4 Adapters.
5 Wires tied back and insulated.
6 FAA RMS.
7 Power Monitor Filter 2A1FL1/5FL2 and/or 2A1FL2/105FL2 installed.
8 Used on redundant systems only.

Table 7-2. Running Wire List - Cont.

| Conductor No. | Conductor Aux. | FROM | TO |
|---|---|---|---|
| | | W162 | |
| | | UD70J1 (P1) | UD31J3 (P2) |
| 1 | 2 | P1-26 | P2-26 |
| 2 | 1 | P1-2 | P2-2 |
| 2 | 2 | P1-27 | P2-27 |
| 3 | 1 | P1-3 | P2-3 |
| 3 | 2 | P1-28 | P2-28 |
| 4 | 1 | P1-4 | P2-4 |
| 4 | 2 | P1-29 | P2-29 |
| 5 | 1 | P1-5 | P2-5 |
| 5 | 2 | P1-30 | P2-30 |
| 6 | 1 | P1-6 | P2-6 |
| 6 | 2 | P1-31 | P2-31 |
| 7 | 1 | P1-7 | P2-7 |
| 7 | 2 | P1-32 | P2-32 |
| 8 | 1 | P1-8 | P2-8 |
| 8 | 2 | P1-33 | P2-33 |
| 9 | 1 | P1-9 | P2-9 |
| 9 | 2 | P1-34 | P2-34 |
| 10 | 1 | P1-10 | P2-10 |
| 10 | 2 | P1-35 | P2-35 |
| 11 | 1 | P1-1 1 | P2-1 1 |
| 11 | 2 | P1-36 | P2-36 |
| 12 | 1 | P1-12 | P2-12 |
| 12 | 2 | P1-37 | P2-37 |
| 13 | 1 | P1-13 | P2-13 |
| 13 | 2 | P1-38 | P2-38 |

1 Site dependent.
2 Used for testing only. Disconnected when not in use.
3 Supplied by vendor.
4 Adapters.
5 Wires tied back and insulated.
6 FAA RMS.
7 Power Monitor Filter 2A1FL1/5FL2 and/or 2A1FL2/105FL2 installed.
8 Used on redundant systems only.

Table 7-2. Running Wire List - Cont.

| Conductor No. | Conductor Aux. | FROM | TO |
|---|---|---|---|
| | | W162 | |
| | | UD70J1 (P1) | UD31J3 (P2) |
| 14 | 1 | P1-14 | P2-14 |
| 14 | 2 | P1-39 | P2-39 |
| 15 | 1 | P1-15 | P2-15 |
| 15 | 2 | P1-40 | P2-40 |
| 16 | 1 | P1-16 | P2-16 |
| 16 | 2 | P1-41 | P2-41 |
| 17 | 1 | P1-17 | P2-17 |
| 17 | 2 | P1-42 | P2-42 |
| 18 | 1 | P1-18 | P2-18 |
| 18 | 2 | P1-43 | P2-43 |
| 19 | 1 | P1-19 | P2-19 |
| 19 | 2 | P1-44 | P2-44 |
| 20 | 1 | P1-20 | P2-20 |
| 20 | 2 | P1-45 | P2-45 |
| 21 | 1 | P1-21 | P2-21 |
| 21 | 2 | P1-46 | P2-46 |
| 22 | 1 | P1-22 | P2-22 |
| 22 | 2 | P1-47 | P2-47 |
| 23 | 1 | P1-23 | P2-23 |
| 23 | 2 | P1-48 | P2-48 |
| 24 | 1 | P1-24 | P2-24 |
| 24 | 2 | P1-49 | P2-49 |
| 25 | 1 | P1-25 | P2-25 |
| 25 | 2 | P1-50 | P2-50 |
| SHLD | | P1-GND | P2-GND |

1 Site dependent.
2 Used for testing only. Disconnected when not in use.
3 Supplied by vendor.
4 Adapters.
5 Wires tied back and insulated.
6 FAA RMS.
7 Power Monitor Filter 2A1FL1/5FL2 and/or 2A1FL2/105FL2 installed.
8 Used on redundant systems only.

Table 7-2. Running Wire List - Cont.

| Conductor No. | Conductor Aux. | FROM | TO |
|---|---|---|---|
| | | W163 | |
| | | UD70J2 (P1) | UD31J4 (P2) |
| 1 | 1 | P1-1 | P2-1 |
| 1 | 2 | P1-26 | P2-26 |
| 2 | 1 | P1-2 | P2-2 |
| 2 | 2 | P1-27 | P2-27 |
| 3 | 1 | P1-3 | P2-3 |
| 3 | 2 | P1-28 | P2-28 |
| 4 | 1 | P1-4 | P2-4 |
| 4 | 2 | P1-29 | P2-29 |
| 5 | 1 | P1-5 | P2-5 |
| 5 | 2 | P1-30 | P2-30 |
| 6 | 1 | P1-6 | P2-6 |
| 6 | 2 | P1-31 | P2-31 |
| 7 | 1 | P1-7 | P2-7 |
| 7 | 2 | P1-32 | P2-32 |
| 8 | 1 | P1-8 | P2-8 |
| 8 | 2 | P1-33 | P2-33 |
| 9 | 1 | P1-9 | P2-9 |
| 9 | 2 | P1-34 | P2-34 |
| 10 | 1 | P1-10 | P2-10 |
| 10 | 2 | P1-35 | P2-35 |
| 11 | 1 | P1-1 1 | P2-1 1 |
| 11 | 2 | P1-36 | P2-36 |
| 12 | 1 | P1-12 | P2-12 |
| 12 | 2 | P1-37 | P2-37 |
| 13 | 1 | P1-13 | P2-13 |

1 Site dependent.
2 Used for testing only. Disconnected when not in use.
3 Supplied by vendor.
4 Adapters.
5 Wires tied back and insulated.
6 FAA RMS.
7 Power Monitor Filter 2A1FL1/5FL2 and/or 2A1FL2/105FL2 installed.
8 Used on redundant systems only.

Table 7-2. Running Wire List - Cont.

| Conductor No. | Conductor Aux. | FROM | TO |
|---|---|---|---|
| | | W163 | |
| | | UD70J2 (P1) | UD31J4 (P2) |
| 13 | 2 | P1-38 | P2-38 |
| 14 | 1 | P1-14 | P2-14 |
| 14 | 2 | P1-39 | P2-39 |
| 15 | 1 | P1-15 | P2-15 |
| 15 | 2 | P1-40 | P2-40 |
| 16 | 1 | P1-16 | P2-16 |
| 16 | 2 | P1-41 | P2-41 |
| 17 | 1 | P1-17 | P2-17 |
| 17 | 2 | P1-42 | P2-42 |
| 18 | 1 | P1-18 | P2-18 |
| 18 | 2 | P1-43 | P2-43 |
| 19 | 1 | P1-19 | P2-19 |
| 19 | 2 | P1-44 | P2-44 |
| 20 | 1 | P1-20 | P2-20 |
| 20 | 2 | P1-45 | P2-45 |
| 21 | 1 | P1-21 | P2-21 |
| 21 | 2 | P1-46 | P2-46 |
| 22 | 1 | P1-22 | P2-22 |
| 22 | 2 | P1-47 | P2-47 |
| 23 | 1 | P1-23 | P2-23 |
| 23 | 2 | P1-48 | P2-48 |
| 24 | 1 | P1-24 | P2-24 |
| 24 | 2 | P1-49 | P2-49 |
| 25 | 1 | P1-25 | P2-25 |
| 25 | 2 | P1-50 | P2-50 |

1 Site dependent.
2 Used for testing only. Disconnected when not in use.
3 Supplied by vendor.
4 Adapters.
5 Wires tied back and insulated.
6 FAA RMS.
7 Power Monitor Filter 2A1FL1/5FL2 and/or 2A1FL2/105FL2 installed.
8 Used on redundant systems only.

Table 7-2. Running Wire List - Cont.

| Conductor No. | Conductor Aux. | FROM | TO |
|---|---|---|---|
| | | W163 | |
| | | UD70J2 (P1) | UD31J4 (P2) |
| SHLD | | P1-GND | P2-GND |
| | | W164 | |
| | | UD70J3 (P1) | UD31J5 (P2) |
| 1 | 1 | P1-1 | P2-1 |
| 1 | 2 | P1-26 | P2-26 |
| 2 | 1 | P1-2 | P2-2 |
| 2 | 2 | P1-27 | P2-27 |
| 3 | 1 | P1-3 | P2-3 |
| 3 | 2 | P1-28 | P2-28 |
| 4 | 1 | P1-4 | P2-4 |
| 4 | 2 | P1-29 | P2-29 |
| 5 | 1 | P1-5 | P2-5 |
| 5 | 2 | P1-30 | P2-30 |
| 6 | 1 | P1-6 | P2-6 |
| 6 | 2 | P1-31 | P2-31 |
| 7 | 1 | P1-7 | P2-7 |
| 7 | 2 | P1-32 | P2-32 |
| 8 | 1 | P1-8 | P2-8 |
| 8 | 2 | P1-33 | P2-33 |
| 9 | 1 | P1-9 | P2-9 |
| 9 | 2 | P1-34 | P2-34 |
| 10 | 1 | P1-10 | P2-10 |
| 10 | 2 | P1-35 | P2-35 |
| 11 | 1 | P1-1 1 | P2-1 1 |
| 11 | 2 | P1-36 | P2-36 |

1 Site dependent.
2 Used for testing only. Disconnected when not in use.
3 Supplied by vendor.
4 Adapters.
5 Wires tied back and insulated.
6 FAA RMS.
7 Power Monitor Filter 2A1FL1/5FL2 and/or 2A1FL2/105FL2 installed.
8 Used on redundant systems only.

Table 7-2. Running Wire List - Cont.

| Conductor No. | Conductor Aux. | FROM | TO |
|---|---|---|---|
| | | W164 | |
| | | UD70J3 (P1) | UD31J5 (P2) |
| 12 | 1 | P1-12 | P2-12 |
| 12 | 2 | P1-37 | P2-37 |
| 13 | 1 | P1-13 | P2-13 |
| 13 | 2 | P1-38 | P2-38 |
| 14 | 1 | P1-14 | P2-14 |
| 14 | 2 | P1-39 | P2-39 |
| 15 | 1 | P1-15 | P2-15 |
| 15 | 2 | P1-40 | P2-40 |
| 16 | 1 | P1-16 | P2-16 |
| 16 | 2 | P1-41 | P2-41 |
| 17 | 1 | P1-17 | P2-17 |
| 17 | 2 | P1-42 | P2-42 |
| 18 | 1 | P1-18 | P2-18 |
| 18 | 2 | P1-43 | P2-43 |
| 19 | 1 | P1-19 | P2-19 |
| 19 | 2 | P1-44 | P2-44 |
| 20 | 1 | P1-20 | P2-20 |
| 20 | 2 | P1-45 | P2-45 |
| 21 | 1 | P1-21 | P2-21 |
| 21 | 2 | P1-46 | P2-46 |
| 22 | 1 | P1-22 | P2-22 |
| 22 | 2 | P1-47 | P2-47 |
| 23 | 1 | P1-23 | P2-23 |
| 23 | 2 | P1-48 | P2-48 |
| 24 | 1 | P1-24 | P2-24 |

[1] Site dependent.
[2] Used for testing only. Disconnected when not in use.
[3] Supplied by vendor.
[4] Adapters.
[5] Wires tied back and insulated.
[6] FAA RMS.
[7] Power Monitor Filter 2A1FL1/5FL2 and/or 2A1FL2/105FL2 installed.
[8] Used on redundant systems only.

Table 7-2. Running Wire List - Cont.

| Conductor No. | Conductor Aux. | FROM | TO |
|---|---|---|---|
| | | W164 | |
| | | UD70J3 (P1) | UD31J5 (P2) |
| 24 | 2 | P1-49 | P2-49 |
| 25 | 1 | P1-25 | P2-25 |
| 25 | 2 | P1-50 | P2-50 |
| SHLD | | P1-GND | P2-GND |

1 Site dependent.
2 Used for testing only. Disconnected when not in use.
3 Supplied by vendor.
4 Adapters.
5 Wires tied back and insulated.
6 FAA RMS.
7 Power Monitor Filter 2A1FL1/5FL2 and/or 2A1FL2/105FL2 installed.
8 Used on redundant systems only.

Table 7-2. Running Wire List

| Conductor No. | Conductor Aux. | FROM | TO |
|---|---|---|---|
| | | W166 | |
| | | UD70J12 (P1) | UD31J21 (P2) |
| 1 | 1 | P1-8 | P2-8 |
| 1 | 2 | P1-6 | P2-15 |
| 2 | 1 | P1-7 | P2-7 |
| 2 | 2 | P1-5 | P2-14 |
| 3 | 1 | P1-1 | P2-1 |
| 3 | 2 | P1-3 | P2-9 |
| 4 | 1 | P1-2 | P2-2 |
| 4 | 2 | P1-4 | P2-10 |
| 5 | 1 | | |
| 5 | 2 | | |
| SHLD | | P1-GND | P2-GND |
| | | W166A | |
| | | UD1A27J23 (P1) | UD31AJ23 (P2) |
| 1 | 1 | P1-8 | P2-8 |
| 1 | 2 | P1-6 | P2-15 |
| 2 | 1 | P1-7 | P2-7 |
| 2 | 2 | P1-5 | P2-14 |
| 3 | 1 | P1-1 | P2-1 |
| 3 | 2 | P1-3 | P2-9 |
| 4 | 1 | P1-2 | P2-2 |
| 4 | 2 | P1-4 | P2-10 |
| 5 | 1 | | |
| 5 | 2 | | |
| SHLD | | P1-GND | P2-GND |

1 Site dependent.
2 Used for testing only. Disconnected when not in use.
3 Supplied by vendor.
4 Adapters.
5 Wires tied back and insulated.
6 FAA RMS.
7 Power Monitor Filter 2A1FL1/5FL2 and/or 2A1FL2/105FL2 installed.
8 Used on redundant systems only.

Table 7-2. Running Wire List - Cont.

| Conductor No. | Conductor Aux. | FROM | TO |
|---|---|---|---|
| | | W166B | |
| | | UD1A27J26 (P1) | UD31J21 (P2) |
| 1 | 1 | P1-8 | P2-8 |
| 1 | 2 | P1-6 | P2-15 |
| 2 | 1 | P1-7 | P2-7 |
| 2 | 2 | P1-5 | P2-14 |
| 3 | 1 | P1-1 | P2-1 |
| 3 | 2 | P1-3 | P2-9 |
| 4 | 1 | P1-2 | P2-2 |
| 4 | 2 | P1-4 | P2-10 |
| 5 | 1 | | |
| 5 | 2 | | |
| SHLD | | P1-GND | P2-GND |
| | | W166C | |
| | | UD70J12 (P1) | UD1A27J27 (P2) |
| 1 | 1 | P1-8 | P2-8 |
| 1 | 2 | P1-6 | P2-15 |
| 2 | 1 | P1-7 | P2-7 |
| 2 | 2 | P1-5 | P2-14 |
| 3 | 1 | P1-1 | P2-1 |
| 3 | 2 | P1-3 | P2-9 |
| 4 | 1 | P1-2 | P2-2 |
| 4 | 2 | P1-4 | P2-10 |
| 5 | 1 | | |
| 5 | 2 | | |
| SHLD | | P1-GND | P2-GND |

1 Site dependent.
2 Used for testing only. Disconnected when not in use.
3 Supplied by vendor.
4 Adapters.
5 Wires tied back and insulated.
6 FAA RMS.
7 Power Monitor Filter 2A1FL1/5FL2 and/or 2A1FL2/105FL2 installed.
8 Used on redundant systems only.

Table 7-2. Running Wire List - Cont.

| Conductor No. | Conductor Aux. | FROM | TO |
|---|---|---|---|
| | | W168 | |
| | | UD70J22 (P1) | UD31J1 (P2) |
| 1 | 1 | P1-1 | P2-1 |
| 1 | 2 | P1-2 | P2-2 |
| 2 | 1 | P1-3 | P2-3 |
| 2 | 2 | P1-4 | P2-4 |
| 3 | 1 | P1-5 | P2-5 |
| 3 | 2 | P1-6 | P2-6 |
| 4 | 1 | P1-7 | P2-7 |
| 4 | 2 | P1-8 | P2-8 |
| 5 | 1 | P1-9 | P2-9 |
| 5 | 2 | P1-10 | P2-10 |
| 6 | 1 | | |
| 6 | 2 | | |
| SHLD | | P1-GND | P2-GND |
| | | W169 | |
| | | UD170J1 (P1) | UD31J8 (P2) |
| 1 | 1 | P1-1 | P2-1 |
| 1 | 2 | P1-26 | P2-26 |
| 2 | 1 | P1-2 | P2-2 |
| 2 | 2 | P1-27 | P2-27 |
| 3 | 1 | P1-3 | P2-3 |
| 3 | 2 | P1-28 | P2-28 |
| 4 | 1 | P1-4 | P2-4 |
| 4 | 2 | P1-29 | P2-29 |
| 5 | 1 | P1-5 | P2-5 |
| 5 | 2 | P1-30 | P2-30 |

1 Site dependent.
2 Used for testing only. Disconnected when not in use.
3 Supplied by vendor.
4 Adapters.
5 Wires tied back and insulated.
6 FAA RMS.
7 Power Monitor Filter 2A1FL1/5FL2 and/or 2A1FL2/105FL2 installed.
8 Used on redundant systems only.

Table 7-2. Running Wire List - Cont.

| Conductor No. | Conductor Aux. | FROM | TO |
|---|---|---|---|
| | | W169 | |
| | | UD170J1 (P1) | UD31J8 (P2) |
| 6 | 1 | P1-6 | P2-6 |
| 6 | 2 | P1-31 | P2-31 |
| 7 | 1 | P1-7 | P2-7 |
| 7 | 2 | P1-32 | P2-32 |
| 8 | 1 | P1-8 | P2-8 |
| 8 | 2 | P1-33 | P2-33 |
| 9 | 1 | P1-9 | P2-9 |
| 9 | 2 | P1-34 | P2-34 |
| 10 | 1 | P1-10 | P2-10 |
| 10 | 2 | P1-35 | P2-35 |
| 11 | 1 | P1-1 1 | P2-1 1 |
| 11 | 2 | P1-36 | P2-36 |
| 12 | 1 | P1-12 | P2-12 |
| 12 | 2 | P1-37 | P2-37 |
| 13 | 1 | P1-13 | P2-13 |
| 13 | 2 | P1-38 | P2-38 |
| 14 | 1 | P1-14 | P2-14 |
| 14 | 2 | P1-39 | P2-39 |
| 15 | 1 | P1-15 | P2-15 |
| 15 | 2 | P1-40 | P2-40 |
| 16 | 1 | P1-16 | P2-16 |
| 16 | 2 | P1-41 | P2-41 |

1 Site dependent.
2 Used for testing only. Disconnected when not in use.
3 Supplied by vendor.
4 Adapters.
5 Wires tied back and insulated.
6 FAA RMS.
7 Power Monitor Filter 2A1FL1/5FL2 and/or 2A1FL2/105FL2 installed.
8 Used on redundant systems only.

Table 7-2. Running Wire List - Cont.

| Conductor No. | Conductor Aux. | FROM | TO |
|---|---|---|---|
| | | W169 | |
| | | UD170J1 (P1) | UD31J8 (P2) |
| 17 | 1 | P1-17 | P2-17 |
| 17 | 2 | P1-42 | P2-42 |
| 18 | 1 | P1-18 | P2-18 |
| 18 | 2 | P1-43 | P2-43 |
| 19 | 1 | P1-19 | P2-19 |
| 19 | 2 | P1-44 | P2-44 |
| 20 | 1 | P1-20 | P2-20 |
| 20 | 2 | P1-45 | P2-45 |
| 21 | 1 | P1-21 | P2-21 |
| 21 | 2 | P1-46 | P2-46 |
| 22 | 1 | P1-22 | P2-22 |
| 22 | 2 | P1-47 | P2-47 |
| 23 | 1 | P1-23 | P2-23 |
| 23 | 2 | P1-48 | P2-48 |
| 24 | 1 | P1-24 | P2-24 |
| 24 | 2 | P1-49 | P2-49 |
| 25 | 1 | P1-25 | P2-25 |
| 25 | 2 | P1-50 | P2-50 |
| SHLD | | P1-GND | P2-GND |
| | | W169A | |
| | | UD170J1 (P1) | UD31AJ14 (P2) |
| 1 | 1 | P1-1 | P2-1 |
| 1 | 2 | P1-26 | P2-26 |
| 2 | 1 | P1-2 | P2-2 |
| 2 | 2 | P1-27 | P2-27 |

1 Site dependent.
2 Used for testing only. Disconnected when not in use.
3 Supplied by vendor.
4 Adapters.
5 Wires tied back and insulated.
6 FAA RMS.
7 Power Monitor Filter 2A1FL1/5FL2 and/or 2A1FL2/105FL2 installed.
8 Used on redundant systems only.

Table 7-2. Running Wire List - Cont.

| Conductor No. | Conductor Aux. | FROM | TO |
|---|---|---|---|
| | | W169A | |
| | | UD170J1 (P1) | UD31AJ14 (P2) |
| 3 | 1 | P1-3 | P2-3 |
| 3 | 2 | P1-28 | P2-28 |
| 4 | 1 | P1-4 | P2-4 |
| 4 | 2 | P1-29 | P2-29 |
| 5 | 1 | P1-5 | P2-5 |
| 5 | 2 | P1-30 | P2-30 |
| 6 | 1 | P1-6 | P2-6 |
| 6 | 2 | P1-31 | P2-31 |
| 7 | 1 | P1-7 | P2-7 |
| 7 | 2 | P1-32 | P2-32 |
| 8 | 1 | P1-8 | P2-8 |
| 8 | 2 | P1-33 | P2-33 |
| 9 | 1 | P1-9 | P2-9 |
| 9 | 2 | P1-34 | P2-34 |
| 10 | 1 | P1-10 | P2-10 |
| 10 | 2 | P1-35 | P2-35 |
| 11 | 1 | P1-1 1 | P2-1 1 |
| 11 | 2 | P1-36 | P2-36 |
| 12 | 1 | P1-12 | P2-12 |
| 12 | 2 | P1-37 | P2-37 |
| 13 | 1 | P1-13 | P2-13 |
| 13 | 2 | P1-38 | P2-38 |
| 14 | 1 | P1-14 | P2-14 |
| 14 | 2 | P1-39 | P2-39 |
| 15 | 1 | P1-15 | P2-15 |

1 Site dependent.
2 Used for testing only. Disconnected when not in use.
3 Supplied by vendor.
4 Adapters.
5 Wires tied back and insulated.
6 FAA RMS.
7 Power Monitor Filter 2A1FL1/5FL2 and/or 2A1FL2/105FL2 installed.
8 Used on redundant systems only.

Table 7-2. Running Wire List - Cont.

| Conductor No. | Conductor Aux. | FROM | TO |
|---|---|---|---|
| | | W169A | |
| | | UD170J1 (P1) | UD31AJ14 (P2) |
| 15 | 2 | P1-40 | P2-40 |
| 16 | 1 | P1-16 | P2-16 |
| 16 | 2 | P1-41 | P2-41 |
| 17 | 1 | P1-17 | P2-17 |
| 17 | 2 | P1-42 | P2-42 |
| 18 | 1 | P1-18 | P2-18 |
| 18 | 2 | P1-43 | P2-43 |
| 19 | 1 | P1-19 | P2-19 |
| 19 | 2 | P1-44 | P2-44 |
| 20 | 1 | P1-20 | P2-20 |
| 20 | 2 | P1-45 | P2-45 |
| 21 | 1 | P1-21 | P2-21 |
| 21 | 2 | P1-46 | P2-46 |
| 22 | 1 | P1-22 | P2-22 |
| 22 | 2 | P1-47 | P2-47 |
| 23 | 1 | P1-23 | P2-23 |
| 23 | 2 | P1-48 | P2-48 |
| 24 | 1 | P1-24 | P2-24 |
| 24 | 2 | P1-49 | P2-49 |
| 25 | 1 | P1-25 | P2-25 |
| 25 | 2 | P1-50 | P2-50 |
| SHLD | | P1-GND | P2-GND |
| | | W169B | |
| | | UD31AJ8 (P1) | UD31J8 (P2) |
| 1 | 1 | P1-1 | P2-1 |

1 Site dependent.
2 Used for testing only. Disconnected when not in use.
3 Supplied by vendor.
4 Adapters.
5 Wires tied back and insulated.
6 FAA RMS.
7 Power Monitor Filter 2A1FL1/5FL2 and/or 2A1FL2/105FL2 installed.
8 Used on redundant systems only.

Table 7-2. Running Wire List - Cont.

| Conductor No. | Conductor Aux. | FROM | TO |
|---|---|---|---|
| | | W169B | |
| | | UD31AJ8 (P1) | UD31J8 (P2) |
| 1 | 2 | P1-26 | P2-26 |
| 2 | 1 | P1-2 | P2-2 |
| 2 | 2 | P1-27 | P2-27 |
| 3 | 1 | P1-3 | P2-3 |
| 3 | 2 | P1-28 | P2-28 |
| 4 | 1 | P1-4 | P2-4 |
| 4 | 2 | P1-29 | P2-29 |
| 5 | 1 | P1-5 | P2-5 |
| 5 | 2 | P1-30 | P2-30 |
| 6 | 1 | P1-6 | P2-6 |
| 6 | 2 | P1-31 | P2-31 |
| 7 | 1 | P1-7 | P2-7 |
| 7 | 2 | P1-32 | P2-32 |
| 8 | 1 | P1-8 | P2-8 |
| 8 | 2 | P1-33 | P2-33 |
| 9 | 1 | P1-9 | P2-9 |
| 9 | 2 | P1-34 | P2-34 |
| 10 | 1 | P1-10 | P2-10 |
| 10 | 2 | P1-35 | P2-35 |
| 11 | 1 | P1-1 1 | P2-1 1 |
| 11 | 2 | P1-36 | P2-36 |
| 12 | 1 | P1-12 | P2-12 |
| 12 | 2 | P1-37 | P2-37 |
| 13 | 1 | P1-13 | P2-13 |
| 13 | 2 | P1-38 | P2-38 |

[1] Site dependent.
[2] Used for testing only. Disconnected when not in use.
[3] Supplied by vendor.
[4] Adapters.
[5] Wires tied back and insulated.
[6] FAA RMS.
[7] Power Monitor Filter 2A1FL1/5FL2 and/or 2A1FL2/105FL2 installed.
[8] Used on redundant systems only.

Table 7-2. Running Wire List - Cont.

| Conductor No. | Conductor Aux. | FROM | TO |
|---|---|---|---|
| | | W169B | |
| | | UD31AJ8 (P1) | UD31J8 (P2) |
| 14 | 1 | P1-14 | P2-14 |
| 14 | 2 | P1-39 | P2-39 |
| 15 | 1 | P1-15 | P2-15 |
| 15 | 2 | P1-40 | P2-40 |
| 16 | 1 | P1-16 | P2-16 |
| 16 | 2 | P1-41 | P2-41 |
| 17 | 1 | P1-17 | P2-17 |
| 17 | 2 | P1-42 | P2-42 |
| 18 | 1 | P1-18 | P2-18 |
| 18 | 2 | P1-43 | P2-43 |
| 19 | 1 | P1-19 | P2-19 |
| 19 | 2 | P1-44 | P2-44 |
| 20 | 1 | P1-20 | P2-20 |
| 20 | 2 | P1-45 | P2-45 |
| 21 | 1 | P1-21 | P2-21 |
| 21 | 2 | P1-46 | P2-46 |
| 22 | 1 | P1-22 | P2-22 |
| 22 | 2 | P1-47 | P2-47 |
| 23 | 1 | P1-23 | P2-23 |
| 23 | 2 | P1-48 | P2-48 |
| 24 | 1 | P1-24 | P2-24 |
| 24 | 2 | P1-49 | P2-49 |
| 25 | 1 | P1-25 | P2-25 |
| 25 | 2 | P1-50 | P2-50 |
| SHLD | | P1-GND | P2-GND |

1 Site dependent.
2 Used for testing only. Disconnected when not in use.
3 Supplied by vendor.
4 Adapters.
5 Wires tied back and insulated.
6 FAA RMS.
7 Power Monitor Filter 2A1FL1/5FL2 and/or 2A1FL2/105FL2 installed.
8 Used on redundant systems only.

Table 7-2. Running Wire List - Cont.

| Conductor No. | Conductor Aux. | FROM | TO |
|---|---|---|---|
| | | W170 | |
| | | UD170J2 (P1) | UD31J9 (P2) |
| 1 | 1 | P1-1 | P2-1 |
| 1 | 2 | P1-26 | P2-26 |
| 2 | 1 | P1-2 | P2-2 |
| 2 | 2 | P1-27 | P2-27 |
| 3 | 1 | P1-3 | P2-3 |
| 3 | 2 | P1-28 | P2-28 |
| 4 | 1 | P1-4 | P2-4 |
| 4 | 2 | P1-29 | P2-29 |
| 5 | 1 | P1-5 | P2-5 |
| 5 | 2 | P1-30 | P2-30 |
| 6 | 1 | P1-6 | P2-6 |
| 6 | 2 | P1-31 | P2-31 |
| 7 | 1 | P1-7 | P2-7 |
| 7 | 2 | P1-32 | P2-32 |
| 8 | 1 | P1-8 | P2-8 |
| 8 | 2 | P1-33 | P2-33 |
| 9 | 1 | P1-9 | P2-9 |
| 9 | 2 | P1-34 | P2-34 |
| 10 | 1 | P1-10 | P2-10 |
| 10 | 2 | P1-35 | P2-35 |
| 11 | 1 | P1-1 1 | P2-1 1 |
| 11 | 2 | P1-36 | P2-36 |
| 12 | 1 | P1-12 | P2-12 |
| 12 | 2 | P1-37 | P2-37 |
| 13 | 1 | P1-13 | P2-13 |

1 Site dependent.
2 Used for testing only. Disconnected when not in use.
3 Supplied by vendor.
4 Adapters.
5 Wires tied back and insulated.
6 FAA RMS.
7 Power Monitor Filter 2A1FL1/5FL2 and/or 2A1FL2/105FL2 installed.
8 Used on redundant systems only.

Table 7-2. Running Wire List - Cont.

| Conductor No. | Conductor Aux. | FROM | TO |
|---|---|---|---|
| | | W170 | |
| | | UD170J2 (P1) | UD31J9 (P2) |
| 13 | 2 | P1-38 | P2-38 |
| 14 | 1 | P1-14 | P2-14 |
| 14 | 2 | P1-39 | P2-39 |
| 15 | 1 | P1-15 | P2-15 |
| 15 | 2 | P1-40 | P2-40 |
| 16 | 1 | P1-16 | P2-16 |
| 16 | 2 | P1-41 | P2-41 |
| 17 | 1 | P1-17 | P2-17 |
| 17 | 2 | P1-42 | P2-42 |
| 18 | 1 | P1-18 | P2-18 |
| 18 | 2 | P1-43 | P2-43 |
| 19 | 1 | P1-19 | P2-19 |
| 19 | 2 | P1-44 | P2-44 |
| 20 | 1 | P1-20 | P2-20 |
| 20 | 2 | P1-45 | P2-45 |
| 21 | 1 | P1-21 | P2-21 |
| 21 | 2 | P1-46 | P2-46 |
| 22 | 1 | P1-22 | P2-22 |
| 22 | 2 | P1-47 | P2-47 |
| 23 | 1 | P1-23 | P2-23 |
| 23 | 2 | P1-48 | P2-48 |
| 24 | 1 | P1-24 | P2-24 |
| 24 | 2 | P1-49 | P2-49 |
| 25 | 1 | P1-25 | P2-25 |
| 25 | 2 | P1-50 | P2-50 |

1 Site dependent.
2 Used for testing only. Disconnected when not in use.
3 Supplied by vendor.
4 Adapters.
5 Wires tied back and insulated.
6 FAA RMS.
7 Power Monitor Filter 2A1FL1/5FL2 and/or 2A1FL2/105FL2 installed.
8 Used on redundant systems only.

Table 7-2. Running Wire List - Cont.

| Conductor No. | Conductor Aux. | FROM | TO |
|---|---|---|---|
| | | W170 | |
| | | UD170J2 (P1) | UD31J9 (P2) |
| SHLD | | P1-GND | P2-GND |
| | | W170A | |
| | | UD170J2 (P1) | UD31AJ15 (P2) |
| 1 | 1 | P1-1 | P2-1 |
| 1 | 2 | P1-26 | P2-26 |
| 2 | 1 | P1-2 | P2-2 |
| 2 | 2 | P1-27 | P2-27 |
| 3 | 1 | P1-3 | P2-3 |
| 3 | 2 | P1-28 | P2-28 |
| 4 | 1 | P1-4 | P2-4 |
| 4 | 2 | P1-29 | P2-29 |
| 5 | 1 | P1-5 | P2-5 |
| 5 | 2 | P1-30 | P2-30 |
| 6 | 1 | P1-6 | P2-6 |
| 6 | 2 | P1-31 | P2-31 |
| 7 | 1 | P1-7 | P2-7 |
| 7 | 2 | P1-32 | P2-32 |
| 8 | 1 | P1-8 | P2-8 |
| 8 | 2 | P1-33 | P2-33 |
| 9 | 1 | P1-9 | P2-9 |
| 9 | 2 | P1-34 | P2-34 |
| 10 | 1 | P1-10 | P2-10 |
| 10 | 2 | P1-35 | P2-35 |
| 11 | 1 | P1-1 1 | P2-1 1 |
| 11 | 2 | P1-36 | P2-36 |

1 Site dependent.
2 Used for testing only. Disconnected when not in use.
3 Supplied by vendor.
4 Adapters.
5 Wires tied back and insulated.
6 FAA RMS.
7 Power Monitor Filter 2A1FL1/5FL2 and/or 2A1FL2/105FL2 installed.
8 Used on redundant systems only.

Table 7-2. Running Wire List - Cont.

| Conductor No. | Conductor Aux. | FROM | TO |
|---|---|---|---|
| | | W170A | |
| | | UD170J2 (P1) | UD31AJ15 (P2) |
| 12 | 1 | P1-12 | P2-12 |
| 12 | 2 | P1-37 | P2-37 |
| 13 | 1 | P1-13 | P2-13 |
| 13 | 2 | P1-38 | P2-38 |
| 14 | 1 | P1-14 | P2-14 |
| 14 | 2 | P1-39 | P2-39 |
| 15 | 1 | P1-15 | P2-15 |
| 15 | 2 | P1-40 | P2-40 |
| 16 | 1 | P1-16 | P2-16 |
| 16 | 2 | P1-41 | P2-41 |
| 17 | 1 | P1-17 | P2-17 |
| 17 | 2 | P1-42 | P2-42 |
| 18 | 1 | P1-18 | P2-18 |
| 18 | 2 | P1-43 | P2-43 |
| 19 | 1 | P1-19 | P2-19 |
| 19 | 2 | P1-44 | P2-44 |
| 20 | 1 | P1-20 | P2-20 |
| 20 | 2 | P1-45 | P2-45 |
| 21 | 1 | P1-21 | P2-21 |
| 21 | 2 | P1-46 | P2-46 |
| 22 | 1 | P1-22 | P2-22 |
| 22 | 2 | P1-47 | P2-47 |
| 23 | 1 | P1-23 | P2-23 |
| 23 | 2 | P1-48 | P2-48 |
| 24 | 1 | P1-24 | P2-24 |

[1] Site dependent.
[2] Used for testing only. Disconnected when not in use.
[3] Supplied by vendor.
[4] Adapters.
[5] Wires tied back and insulated.
[6] FAA RMS.
[7] Power Monitor Filter 2A1FL1/5FL2 and/or 2A1FL2/105FL2 installed.
[8] Used on redundant systems only.

Table 7-2. Running Wire List - Cont.

| Conductor No. | Conductor Aux. | FROM | TO |
|---|---|---|---|
| | | W170A | |
| | | UD170J2 (P1) | UD31AJ15 (P2) |
| 24 | 2 | P1-49 | P2-49 |
| 25 | 1 | P1-25 | P2-25 |
| 25 | 2 | P1-50 | P2-50 |
| SHLD | | P1-GND | P2-GND |
| | | W170B | |
| | | UD31AJ9 (P1) | UD31J9 (P2) |
| 1 | 1 | P1-1 | P2-1 |
| 1 | 2 | P1-26 | P2-26 |
| 2 | 1 | P1-2 | P2-2 |
| 2 | 2 | P1-27 | P2-27 |
| 3 | 1 | P1-3 | P2-3 |
| 3 | 2 | P1-28 | P2-28 |
| 4 | 1 | P1-4 | P2-4 |
| 4 | 2 | P1-29 | P2-29 |
| 5 | 1 | P1-5 | P2-5 |
| 5 | 2 | P1-30 | P2-30 |
| 6 | 1 | P1-6 | P2-6 |
| 6 | 2 | P1-31 | P2-31 |
| 7 | 1 | P1-7 | P2-7 |
| 7 | 2 | P1-32 | P2-32 |
| 8 | 1 | P1-8 | P2-8 |
| 8 | 2 | P1-33 | P2-33 |
| 9 | 1 | P1-9 | P2-9 |
| 9 | 2 | P1-34 | P2-34 |
| 10 | 1 | P1-10 | P2-10 |

1 Site dependent.
2 Used for testing only. Disconnected when not in use.
3 Supplied by vendor.
4 Adapters.
5 Wires tied back and insulated.
6 FAA RMS.
7 Power Monitor Filter 2A1FL1/5FL2 and/or 2A1FL2/105FL2 installed.
8 Used on redundant systems only.

Table 7-2. Running Wire List - Cont.

| Conductor No. | Conductor Aux. | FROM | TO |
|---|---|---|---|
| | | W170B | |
| | | UD31AJ9 (P1) | UD31J9 (P2) |
| 10 | 2 | P1-35 | P2-35 |
| 11 | 1 | P1-1 1 | P2-1 1 |
| 11 | 2 | P1-36 | P2-36 |
| 12 | 1 | P1-12 | P2-12 |
| 12 | 2 | P1-37 | P2-37 |
| 13 | 1 | P1-13 | P2-13 |
| 13 | 2 | P1-38 | P2-38 |
| 14 | 1 | P1-14 | P2-14 |
| 14 | 2 | P1-39 | P2-39 |
| 15 | 1 | P1-15 | P2-15 |
| 15 | 2 | P1-40 | P2-40 |
| 16 | 1 | P1-16 | P2-16 |
| 16 | 2 | P1-41 | P2-41 |
| 17 | 1 | P1-17 | P2-17 |
| 17 | 2 | P1-42 | P2-42 |
| 18 | 1 | P1-18 | P2-18 |
| 18 | 2 | P1-43 | P2-43 |
| 19 | 1 | P1-19 | P2-19 |
| 19 | 2 | P1-44 | P2-44 |
| 20 | 1 | P1-20 | P2-20 |
| 20 | 2 | P1-45 | P2-45 |
| 21 | 1 | P1-21 | P2-21 |
| 21 | 2 | P1-46 | P2-46 |
| 22 | 1 | P1-22 | P2-22 |
| 22 | 2 | P1-47 | P2-47 |

1 Site dependent.
2 Used for testing only. Disconnected when not in use.
3 Supplied by vendor.
4 Adapters.
5 Wires tied back and insulated.
6 FAA RMS.
7 Power Monitor Filter 2A1FL1/5FL2 and/or 2A1FL2/105FL2 installed.
8 Used on redundant systems only.

Table 7-2. Running Wire List - Cont.

| Conductor No. | Conductor Aux. | FROM | TO |
|---|---|---|---|
| | | W170B | |
| | | UD31AJ9 (P1) | UD31J9 (P2) |
| 23 | 1 | P1-23 | P2-23 |
| 23 | 2 | P1-48 | P2-48 |
| 24 | 1 | P1-24 | P2-24 |
| 24 | 2 | P1-49 | P2-49 |
| 25 | 1 | P1-25 | P2-25 |
| 25 | 2 | P1-50 | P2-50 |
| SHLD | | P1-GND | P2-GND |
| | | W171 | |
| | | UD170J3 (P1) | UD31J10 (P2) |
| 1 | 1 | P1-1 | P2-1 |
| 1 | 2 | P1-26 | P2-26 |
| 2 | 1 | P1-2 | P2-2 |
| 2 | 2 | P1-27 | P2-27 |
| 3 | 1 | P1-3 | P2-3 |
| 3 | 2 | P1-28 | P2-28 |
| 4 | 1 | P1-4 | P2-4 |
| 4 | 2 | P1-29 | P2-29 |
| 5 | 1 | P1-5 | P2-5 |
| 5 | 2 | P1-30 | P2-30 |
| 6 | 1 | P1-6 | P2-6 |
| 6 | 2 | P1-31 | P2-31 |
| 7 | 1 | P1-7 | P2-7 |
| 7 | 2 | P1-32 | P2-32 |
| 8 | 1 | P1-8 | P2-8 |
| 8 | 2 | P1-33 | P2-33 |

1 Site dependent.
2 Used for testing only. Disconnected when not in use.
3 Supplied by vendor.
4 Adapters.
5 Wires tied back and insulated.
6 FAA RMS.
7 Power Monitor Filter 2A1FL1/5FL2 and/or 2A1FL2/105FL2 installed.
8 Used on redundant systems only.

Table 7-2. Running Wire List - Cont.

| Conductor No. | Conductor Aux. | FROM | TO |
|---|---|---|---|
| | | W171 | |
| | | UD170J3 (P1) | UD31J10 (P2) |
| 9 | 1 | P1-9 | P2-9 |
| 9 | 2 | P1-34 | P2-34 |
| 10 | 1 | P1-10 | P2-10 |
| 10 | 2 | P1-35 | P2-35 |
| 11 | 1 | P1-1 1 | P2-1 1 |
| 11 | 2 | P1-36 | P2-36 |
| 12 | 1 | P1-12 | P2-12 |
| 12 | 2 | P1-37 | P2-37 |
| 13 | 1 | P1-13 | P2-13 |
| 13 | 2 | P1-38 | P2-38 |
| 14 | 1 | P1-14 | P2-14 |
| 14 | 2 | P1-39 | P2-39 |
| 15 | 1 | P1-15 | P2-15 |
| 15 | 2 | P1-40 | P2-40 |
| 16 | 1 | P1-16 | P2-16 |
| 16 | 2 | P1-41 | P2-41 |
| 17 | 1 | P1-17 | P2-17 |
| 17 | 2 | P1-42 | P2-42 |
| 18 | 1 | P1-18 | P2-18 |
| 18 | 2 | P1-43 | P2-43 |
| 19 | 1 | P1-19 | P2-19 |
| 19 | 2 | P1-44 | P2-44 |
| 20 | 1 | P1-20 | P2-20 |
| 20 | 2 | P1-45 | P2-45 |
| 21 | 1 | P1-21 | P2-21 |

1 Site dependent.
2 Used for testing only. Disconnected when not in use.
3 Supplied by vendor.
4 Adapters.
5 Wires tied back and insulated.
6 FAA RMS.
7 Power Monitor Filter 2A1FL1/5FL2 and/or 2A1FL2/105FL2 installed.
8 Used on redundant systems only.

Table 7-2. Running Wire List - Cont.

| Conductor No. | Conductor Aux. | FROM | TO |
|---|---|---|---|
| | | W171 | |
| | | UD170J3 (P1) | UD31J10 (P2) |
| 21 | 2 | P1-46 | P2-46 |
| 22 | 1 | P1-22 | P2-22 |
| 22 | 2 | P1-47 | P2-47 |
| 23 | 1 | P1-23 | P2-23 |
| 23 | 2 | P1-48 | P2-48 |
| 24 | 1 | P1-24 | P2-24 |
| 24 | 2 | P1-49 | P2-49 |
| 25 | 1 | P1-25 | P2-25 |
| 25 | 2 | P1-50 | P2-50 |
| SHLD | | P1-GND | P2-GND |
| | | W171A | |
| | | UD170J3 (P1) | UD31AJ16 (P2) |
| 1 | 1 | P1-1 | P2-1 |
| 1 | 2 | P1-26 | P2-26 |
| 2 | 1 | P1-2 | P2-2 |
| 2 | 2 | P1-27 | P2-27 |
| 3 | 1 | P1-3 | P2-3 |
| 3 | 2 | P1-28 | P2-28 |
| 4 | 1 | P1-4 | P2-4 |
| 4 | 2 | P1-29 | P2-29 |
| 5 | 1 | P1-5 | P2-5 |
| 5 | 2 | P1-30 | P2-30 |
| 6 | 1 | P1-6 | P2-6 |
| 6 | 2 | P1-31 | P2-31 |
| 7 | 1 | P1-7 | P2-7 |

1 Site dependent.
2 Used for testing only. Disconnected when not in use.
3 Supplied by vendor.
4 Adapters.
5 Wires tied back and insulated.
6 FAA RMS.
7 Power Monitor Filter 2A1FL1/5FL2 and/or 2A1FL2/105FL2 installed.
8 Used on redundant systems only.

Table 7-2. Running Wire List - Cont.

| Conductor No. | Conductor Aux. | FROM | TO |
|---|---|---|---|
| | | W171A | |
| | | UD170J3 (P1) | UD31AJ16 (P2) |
| 7 | 2 | P1-32 | P2-32 |
| 8 | 1 | P1-8 | P2-8 |
| 8 | 2 | P1-33 | P2-33 |
| 9 | 1 | P1-9 | P2-9 |
| 9 | 2 | P1-34 | P2-34 |
| 10 | 1 | P1-10 | P2-10 |
| 10 | 2 | P1-35 | P2-35 |
| 11 | 1 | P1-1 1 | P2-1 1 |
| 11 | 2 | P1-36 | P2-36 |
| 12 | 1 | P1-12 | P2-12 |
| 12 | 2 | P1-37 | P2-37 |
| 13 | 1 | P1-13 | P2-13 |
| 13 | 2 | P1-38 | P2-38 |
| 14 | 1 | P1-14 | P2-14 |
| 14 | 2 | P1-39 | P2-39 |
| 15 | 1 | P1-15 | P2-15 |
| 15 | 2 | P1-40 | P2-40 |
| 16 | 1 | P1-16 | P2-16 |
| 16 | 2 | P1-41 | P2-41 |
| 17 | 1 | P1-17 | P2-17 |
| 17 | 2 | P1-42 | P2-42 |
| 18 | 1 | P1-18 | P2-18 |
| 18 | 2 | P1-43 | P2-43 |
| 19 | 1 | P1-19 | P2-19 |
| 19 | 2 | P1-44 | P2-44 |

1 Site dependent.
2 Used for testing only. Disconnected when not in use.
3 Supplied by vendor.
4 Adapters.
5 Wires tied back and insulated.
6 FAA RMS.
7 Power Monitor Filter 2A1FL1/5FL2 and/or 2A1FL2/105FL2 installed.
8 Used on redundant systems only.

Table 7-2. Running Wire List - Cont.

| Conductor No. | Conductor Aux. | FROM | TO |
|---|---|---|---|
| | | W171A | |
| | | UD170J3 (P1) | UD31AJ16 (P2) |
| 20 | 1 | P1-20 | P2-20 |
| 20 | 2 | P1-45 | P2-45 |
| 21 | 1 | P1-21 | P2-21 |
| 21 | 2 | P1-46 | P2-46 |
| 22 | 1 | P1-22 | P2-22 |
| 22 | 2 | P1-47 | P2-47 |
| 23 | 1 | P1-23 | P2-23 |
| 23 | 2 | P1-48 | P2-48 |
| 24 | 1 | P1-24 | P2-24 |
| 24 | 2 | P1-49 | P2-49 |
| 25 | 1 | P1-25 | P2-25 |
| 25 | 2 | P1-50 | P2-50 |
| SHLD | | P1-GND | P2-GND |
| | | W171B | |
| | | UD31AJ10 (P1) | UD31J10 (P2) |
| 1 | 1 | P1-1 | P2-1 |
| 1 | 2 | P1-26 | P2-26 |
| 2 | 1 | P1-2 | P2-2 |
| 2 | 2 | P1-27 | P2-27 |
| 3 | 1 | P1-3 | P2-3 |
| 3 | 2 | P1-28 | P2-28 |
| 4 | 1 | P1-4 | P2-4 |
| 4 | 2 | P1-29 | P2-29 |
| 5 | 1 | P1-5 | P2-5 |
| 5 | 2 | P1-30 | P2-30 |

1 Site dependent.
2 Used for testing only. Disconnected when not in use.
3 Supplied by vendor.
4 Adapters.
5 Wires tied back and insulated.
6 FAA RMS.
7 Power Monitor Filter 2A1FL1/5FL2 and/or 2A1FL2/105FL2 installed.
8 Used on redundant systems only.

Table 7-2. Running Wire List - Cont.

| Conductor No. | Conductor Aux. | FROM | TO |
|---|---|---|---|
| | | W171B | |
| | | UD31AJ10 (P1) | UD31J10 (P2) |
| 6 | 1 | P1-6 | P2-6 |
| 6 | 2 | P1-31 | P2-31 |
| 7 | 1 | P1-7 | P2-7 |
| 7 | 2 | P1-32 | P2-32 |
| 8 | 1 | P1-8 | P2-8 |
| 8 | 2 | P1-33 | P2-33 |
| 9 | 1 | P1-9 | P2-9 |
| 9 | 2 | P1-34 | P2-34 |
| 10 | 1 | P1-10 | P2-10 |
| 10 | 2 | P1-35 | P2-35 |
| 11 | 1 | P1-1 1 | P2-1 1 |
| 11 | 2 | P1-36 | P2-36 |
| 12 | 1 | P1-12 | P2-12 |
| 12 | 2 | P1-37 | P2-37 |
| 13 | 1 | P1-13 | P2-13 |
| 13 | 2 | P1-38 | P2-38 |
| 14 | 1 | P1-14 | P2-14 |
| 14 | 2 | P1-39 | P2-39 |
| 15 | 1 | P1-15 | P2-15 |
| 15 | 2 | P1-40 | P2-40 |
| 16 | 1 | P1-16 | P2-16 |
| 16 | 2 | P1-41 | P2-41 |
| 17 | 1 | P1-17 | P2-17 |
| 17 | 2 | P1-42 | P2-42 |
| 18 | 1 | P1-18 | P2-18 |

1 Site dependent.
2 Used for testing only. Disconnected when not in use.
3 Supplied by vendor.
4 Adapters.
5 Wires tied back and insulated.
6 FAA RMS.
7 Power Monitor Filter 2A1FL1/5FL2 and/or 2A1FL2/105FL2 installed.
8 Used on redundant systems only.

Table 7-2. Running Wire List - Cont.

| Conductor No. | Conductor Aux. | FROM | TO |
|---|---|---|---|
| | | W171B | |
| | | UD31AJ10 (P1) | UD31J10 (P2) |
| 18 | 2 | P1-43 | P2-43 |
| 19 | 1 | P1-19 | P2-19 |
| 19 | 2 | P1-44 | P2-44 |
| 20 | 1 | P1-20 | P2-20 |
| 20 | 2 | P1-45 | P2-45 |
| 21 | 1 | P1-21 | P2-21 |
| 21 | 2 | P1-46 | P2-46 |
| 22 | 1 | P1-22 | P2-22 |
| 22 | 2 | P1-47 | P2-47 |
| 23 | 1 | P1-23 | P2-23 |
| 23 | 2 | P1-48 | P2-48 |
| 24 | 1 | P1-24 | P2-24 |
| 24 | 2 | P1-49 | P2-49 |
| 25 | 1 | P1-25 | P2-25 |
| 25 | 2 | P1-50 | P2-50 |
| SHLD | | P1-GND | P2-GND |
| | | W172B | |
| | | UD31AJ11 (P1) | UD31J11 (P2) |
| 1 | 1 | P1-1 | P2-1 |
| 1 | 2 | P1-26 | P2-26 |
| 2 | 1 | P1-2 | P2-2 |
| 2 | 2 | P1-27 | P2-27 |
| 3 | 1 | P1-3 | P2-3 |
| 3 | 2 | P1-28 | P2-28 |
| 4 | 1 | P1-4 | P2-4 |

1 Site dependent.
2 Used for testing only. Disconnected when not in use.
3 Supplied by vendor.
4 Adapters.
5 Wires tied back and insulated.
6 FAA RMS.
7 Power Monitor Filter 2A1FL1/5FL2 and/or 2A1FL2/105FL2 installed.
8 Used on redundant systems only.

Table 7-2. Running Wire List - Cont.

| Conductor No. | Conductor Aux. | FROM | TO |
|---|---|---|---|
| | | W172B | |
| | | UD31AJ11 (P1) | UD31J11 (P2) |
| 4 | 2 | P1-29 | P2-29 |
| 5 | 1 | P1-5 | P2-5 |
| 5 | 2 | P1-30 | P2-30 |
| 6 | 1 | P1-6 | P2-6 |
| 6 | 2 | P1-31 | P2-31 |
| 7 | 1 | P1-7 | P2-7 |
| 7 | 2 | P1-32 | P2-32 |
| 8 | 1 | P1-8 | P2-8 |
| 8 | 2 | P1-33 | P2-33 |
| 9 | 1 | P1-9 | P2-9 |
| 9 | 2 | P1-34 | P2-34 |
| 10 | 1 | P1-10 | P2-10 |
| 10 | 2 | P1-35 | P2-35 |
| 11 | 1 | P1-1 1 | P2-1 1 |
| 11 | 2 | P1-36 | P2-36 |
| 12 | 1 | P1-12 | P2-12 |
| 12 | 2 | P1-37 | P2-37 |
| 13 | 1 | P1-13 | P2-13 |
| 13 | 2 | P1-38 | P2-38 |
| 14 | 1 | P1-14 | P2-14 |
| 14 | 2 | P1-39 | P2-39 |
| 15 | 1 | P1-15 | P2-15 |
| 15 | 2 | P1-40 | P2-40 |
| 16 | 1 | P1-16 | P2-16 |
| 16 | 2 | P1-41 | P2-41 |

1 Site dependent.
2 Used for testing only. Disconnected when not in use.
3 Supplied by vendor.
4 Adapters.
5 Wires tied back and insulated.
6 FAA RMS.
7 Power Monitor Filter 2A1FL1/5FL2 and/or 2A1FL2/105FL2 installed.
8 Used on redundant systems only.

Table 7-2. Running Wire List - Cont.

| Conductor No. | Conductor Aux. | FROM | TO |
|---|---|---|---|
| | | W172B | |
| | | UD31AJ11 (P1) | UD31J11 (P2) |
| 17 | 1 | P1-17 | P2-17 |
| 17 | 2 | P1-42 | P2-42 |
| 18 | 1 | P1-18 | P2-18 |
| 18 | 2 | P1-43 | P2-43 |
| 19 | 1 | P1-19 | P2-19 |
| 19 | 2 | P1-44 | P2-44 |
| 20 | 1 | P1-20 | P2-20 |
| 20 | 2 | P1-45 | P2-45 |
| 21 | 1 | P1-21 | P2-21 |
| 21 | 2 | P1-46 | P2-46 |
| 22 | 1 | P1-22 | P2-22 |
| 22 | 2 | P1-47 | P2-47 |
| 23 | 1 | P1-23 | P2-23 |
| 23 | 2 | P1-48 | P2-48 |
| 24 | 1 | P1-24 | P2-24 |
| 24 | 2 | P1-49 | P2-49 |
| 25 | 1 | P1-25 | P2-25 |
| 25 | 2 | P1-50 | P2-50 |
| SHLD | | P1-GND | P2-GND |

1 Site dependent.
2 Used for testing only. Disconnected when not in use.
3 Supplied by vendor.
4 Adapters.
5 Wires tied back and insulated.
6 FAA RMS.
7 Power Monitor Filter 2A1FL1/5FL2 and/or 2A1FL2/105FL2 installed.
8 Used on redundant systems only.

Table 7-2. Running Wire List

| Conductor No. | Conductor Aux. | FROM | TO |
|---|---|---|---|
| | | W173 | |
| | | UD170J12 (P1) | UD31J23 (P2) |
| 1 | 1 | P1-8 | P2-8 |
| 1 | 2 | P1-6 | P2-15 |
| 2 | 1 | P1-7 | P2-7 |
| 2 | 2 | P1-5 | P2-14 |
| 3 | 1 | P1-1 | P2-1 |
| 3 | 2 | P1-3 | P2-9 |
| 4 | 1 | P1-2 | P2-2 |
| 4 | 2 | P1-4 | P2-10 |
| 5 | 1 | | |
| 5 | 2 | | |
| SHLD | | P1-GND | P2-GND |
| | | W173A | |
| | | UD170J12 (P1) | UD1A27J22 (P2) |
| 1 | 1 | P1-8 | P2-8 |
| 1 | 2 | P1-6 | P2-15 |
| 2 | 1 | P1-7 | P2-7 |
| 2 | 2 | P1-5 | P2-14 |
| 3 | 1 | P1-1 | P2-1 |
| 3 | 2 | P1-3 | P2-9 |
| 4 | 1 | P1-2 | P2-2 |
| 4 | 2 | P1-4 | P2-10 |
| 5 | 1 | | |
| 5 | 2 | | |
| SHLD | | P1-GND | P2-GND |

1 Site dependent.
2 Used for testing only. Disconnected when not in use.
3 Supplied by vendor.
4 Adapters.
5 Wires tied back and insulated.
6 FAA RMS.
7 Power Monitor Filter 2A1FL1/5FL2 and/or 2A1FL2/105FL2 installed.
8 Used on redundant systems only.

Table 7-2. Running Wire List - Cont.

| Conductor No. | Conductor Aux. | FROM | TO |
|---|---|---|---|
| | | W173B | |
| | | UD1A27J25 (P1) | UD31J23 (P2) |
| 1 | 1 | P1-8 | P2-8 |
| 1 | 2 | P1-6 | P2-15 |
| 2 | 1 | P1-7 | P2-7 |
| 2 | 2 | P1-5 | P2-14 |
| 3 | 1 | P1-1 | P2-1 |
| 3 | 2 | P1-3 | P2-9 |
| 4 | 1 | P1-2 | P2-2 |
| 4 | 2 | P1-4 | P2-10 |
| 5 | 1 | | |
| 5 | 2 | | |
| SHLD | | P1-GND | P2-GND |
| | | W173C | |
| | | UD1A27J24 (P1) | UD31AJ21 (P2) |
| 1 | 1 | P1-8 | P2-8 |
| 1 | 2 | P1-6 | P2-15 |
| 2 | 1 | P1-7 | P2-7 |
| 2 | 2 | P1-5 | P2-14 |
| 3 | 1 | P1-1 | P2-1 |
| 3 | 2 | P1-3 | P2-9 |
| 4 | 1 | P1-2 | P2-2 |
| 4 | 2 | P1-4 | P2-10 |
| 5 | 1 | | |
| 5 | 2 | | |
| SHLD | | P1-GND | P2-GND |

1 Site dependent.
2 Used for testing only. Disconnected when not in use.
3 Supplied by vendor.
4 Adapters.
5 Wires tied back and insulated.
6 FAA RMS.
7 Power Monitor Filter 2A1FL1/5FL2 and/or 2A1FL2/105FL2 installed.
8 Used on redundant systems only.

Table 7-2. Running Wire List - Cont.

| Conductor No. | Conductor Aux. | FROM | TO |
|---|---|---|---|
| | | W178 | |
| | | UD170J22 (P1) | UD31J2 (P2) |
| 1 | 1 | P1-1 | P2-1 |
| 1 | 2 | P1-2 | P2-2 |
| 2 | 1 | P1-3 | P2-3 |
| 2 | 2 | P1-4 | P2-4 |
| 3 | 1 | P1-5 | P2-5 |
| 3 | 2 | P1-6 | P2-6 |
| 4 | 1 | P1-7 | P2-7 |
| 4 | 2 | P1-8 | P2-8 |
| 5 | 1 | P1-9 | P2-9 |
| 5 | 2 | P1-10 | P2-10 |
| 6 | 1 | | |
| 6 | 2 | | |
| SHLD | | P1-GND | P2-GND |
| | | W181 | |
| | | UD105J11 (P1) | UD1TB2-DIAL LINE (P2) |
| 1 | 1 | P1-4 | P2-2 |
| 1 | 2 | P1-5 | P2-27 |
| 2 | 1 | P1-3 | P2-25 |
| 2 | 2 | P1-6 | P2-50 |
| SHLD | | P1-GND | NO |
| | | W182 | |
| | | UD5J27 (P1) | UD105J27 (P2) |
| 1 | 1 | P1-1 | P2-1 |
| 1 | 2 | P1-3 | P2-3 |

1 Site dependent.
2 Used for testing only. Disconnected when not in use.
3 Supplied by vendor.
4 Adapters.
5 Wires tied back and insulated.
6 FAA RMS.
7 Power Monitor Filter 2A1FL1/5FL2 and/or 2A1FL2/105FL2 installed.
8 Used on redundant systems only.

Table 7-2. Running Wire List - Cont.

| Conductor No. | Conductor Aux. | FROM | TO |
|---|---|---|---|
| | | W182 | |
| | | UD5J27 (P1) | UD105J27 (P2) |
| 2 | 1 | P1-2 | P2-2 |
| 2 | 2 | P1-7 | P2-7 |
| 3 | 1 | P1-6 | P2-6 |
| 3 | 2 | P1-15 | P2-15 |
| 4 | 1 | P1-14 | P2-14 |
| 4 | 2 | P1-4 | P2-4 |
| SHLD | | P1-GND | P2-GND |
| | | W183 | |
| | | UD5J26 (P1) | UD105J26 (P2) |
| 1 | 1 | P1-1 | P2-1 |
| 1 | 2 | P1-3 | P2-3 |
| 2 | 1 | P1-2 | P2-2 |
| 2 | 2 | P1-7 | P2-7 |
| 3 | 1 | P1-6 | P2-6 |
| 3 | 2 | P1-15 | P2-15 |
| 4 | 1 | P1-14 | P2-14 |
| 4 | 2 | P1-4 | P2-4 |
| SHLD | | P1-GND | P2-GND |
| | | W184 | |
| | | UD5J15 (P1) | UD105J15 (P2) |
| 1 | 1 | P1-3 | P2-12 |
| 1 | 2 | P1-1 1 | P2-4 |
| 2 | 1 | P1-12 | P2-3 |
| 2 | 2 | P1-4 | P2-1 1 |
| 3 | 1 | P1-5 | P2-13 |

1 Site dependent.
2 Used for testing only. Disconnected when not in use.
3 Supplied by vendor.
4 Adapters.
5 Wires tied back and insulated.
6 FAA RMS.
7 Power Monitor Filter 2A1FL1/5FL2 and/or 2A1FL2/105FL2 installed.
8 Used on redundant systems only.

Table 7-2. Running Wire List - Cont.

| Conductor No. | Conductor Aux. | FROM | TO |
|---|---|---|---|
| | | W184 | |
| | | UD5J15 (P1) | UD105J15 (P2) |
| 3 | 2 | P1-13 | P2-5 |
| 4 | 1 | P1-1 | P2-2 |
| 4 | 2 | P1-9 | P2-10 |
| 5 | 1 | P1-2 | P2-1 |
| 5 | 2 | P1-10 | P2-9 |
| 6 | 1 | P1-7 | P2-7 |
| 6 | 2 | P1-15 | P2-15 |
| SHLD | | P1-GND | P2-GND |
| | | W185 | |
| | | UD5J28 (P1) | UD105J28 (P2) |
| 1 | 1 | P1-1 | P2-1 |
| 1 | 2 | P1-9 | P2-9 |
| 2 | 1 | P1-3 | P2-3 |
| 2 | 2 | P1-11 | P2-11 |
| SHLD | | P1-2 | P2-2 |
| SHLD | | P1-GND | P2-GND |
| 3 | | P1-2 | P1-4 |
| 4 | | P2-2 | P2-4 |
| | | W185A | |
| | | UD5J28 (P1) | UD1A27J3 (P2) |
| 1 | 1 | P1-1 | P2-1 |
| 1 | 2 | P1-9 | P2-9 |
| 2 | 1 | P1-3 | P2-3 |
| 2 | 2 | P1-11 | P2-11 |
| SHLD | | P1-2 | P2-2 |

1 Site dependent.
2 Used for testing only. Disconnected when not in use.
3 Supplied by vendor.
4 Adapters.
5 Wires tied back and insulated.
6 FAA RMS.
7 Power Monitor Filter 2A1FL1/5FL2 and/or 2A1FL2/105FL2 installed.
8 Used on redundant systems only.

Table 7-2. Running Wire List - Cont.

| Conductor No. | Aux. | FROM | TO |
|---|---|---|---|
| | | W185A | |
| | | UD5J28 (P1) | UD1A27J3 (P2) |
| SHLD | | P1-GND | P2-GND |
| 3 | | P1-2 | P1-4 |
| 4 | | P2-2 | P2-4 |

1 Site dependent.
2 Used for testing only. Disconnected when not in use.
3 Supplied by vendor.
4 Adapters.
5 Wires tied back and insulated.
6 FAA RMS.
7 Power Monitor Filter 2A1FL1/5FL2 and/or 2A1FL2/105FL2 installed.
8 Used on redundant systems only.

Table 7-2. Running Wire List - Cont.

| Conductor No. | Conductor Aux. | FROM | TO |
|---|---|---|---|
| | | W280 | |
| | | UD5J11 (P1) | UD19J1 (P2) |
| 1 | 1 | P1-1 | P2-1 |
| 1 | 2 | P1-9 | P2-2 |
| | SHLD | SHLD B | E101/P2-3 |
| | | E101 | P2-3 |
| 2 | 1 | P1-2 | P2-4 |
| 2 | 2 | P1-10 | P2-5 |
| | SHLD | SHLD B | E102/P2-6 |
| | | E102 | P2-6 |
| 3 | 1 | | |
| 3 | 2 | | |
| | SHLD | | |
| | | W281 | |
| | | UD70J19 (P1) | UD5J11 (P2) |
| 1 | 1 | P1-1 | P2-10 |
| 1 | 2 | P1-9 | P2-2 |
| | A | SHLD | E101 |
| 2 | B | SHLD | E102 |
| 2 | 1 | P1-2 | P2-9 |
| 2 | 2 | P1-10 | P2-1 |
| | A | SHLD | E103 |
| | B | SHLD | E104 |
| 3 | 1 | | |
| 3 | 2 | | |
| | SHLD | | |
| 4 | | E101 | E103 |
| 5 | | E102 | E104 |

1 Site dependent.
2 Used for testing only. Disconnected when not in use.
3 Supplied by vendor.
4 Adapters.
5 Wires tied back and insulated.
6 FAA RMS.
7 Power Monitor Filter 2A1FL1/5FL2 and/or 2A1FL2/105FL2 installed.
8 Used on redundant systems only.

Table 7-2. Running Wire List - Cont.

| Conductor No. | Conductor Aux. | FROM | TO |
|---|---|---|---|
| | | W281 | |
| | | UD70J19 (P1) | UD5J11 (P2) |
| 6 | | E103 | P1-5 |
| 7 | | E104 | P2-5 |
| | | W328 | |
| | | UD41J15 (P1) | UD70/170J5 (P2) |
| 1 | 1 | P1-4 | P2-4 |
| 1 | 2 | P1-22 | P2-22 |
| 2 | 1 | P1-6 | P2-6 |
| 2 | 2 | P1-24 | P2-24 |
| 3 | 1 | P1-7 | P2-7 |
| 3 | 2 | P1-25 | P2-25 |
| 4 | 1 | P1-9 | P2-9 |
| 4 | 2 | P1-27 | P2-27 |
| 5 | 1 | P1-11 | P2-11 |
| 5 | 2 | P1-29 | P2-29 |
| 6 | 1 | P1-13 | P2-13 |
| 6 | 2 | P1-31 | P2-31 |
| 7 | 1 | P1-5 | P2-5 |
| 7 | 2 | P1-23 | P2-23 |
| 8 | 1 | P1-8 | P2-8 |
| 8 | 2 | P1-26 | P2-26 |
| 9 | 1 | P1-12 | P2-12 |
| 9 | 2 | P1-30 | P2-30 |
| 10 | 1 | P1-17 | P2-17 |
| 10 | 2 | P1-35 | P2-35 |
| 11 | 1 | P1-1 | P2-1 |
| 11 | 2 | P1-36 | P2-36 |
| 12 | 1 | P1-19 | P2-19 |

[1] Site dependent.
[2] Used for testing only. Disconnected when not in use.
[3] Supplied by vendor.
[4] Adapters.
[5] Wires tied back and insulated.
[6] FAA RMS.
[7] Power Monitor Filter 2A1FL1/5FL2 and/or 2A1FL2/105FL2 installed.
[8] Used on redundant systems only.

Table 7-2. Running Wire List - Cont.

| Conductor No. | Conductor Aux. | FROM | TO |
|---|---|---|---|
| | | W328 | |
| | | UD41J15 (P1) | UD70/170J5 (P2) |
| 12 | 2 | P1-37 | P2-37 |
| 13 | 1 | P1-15 | P2-15 |
| 13 | 2 | P1-18 | P2-18 |
| 14 | 1 | P1-2 | P2-2 |
| 14 | 2 | P1-20 | P2-20 |
| 15 | 1 | P1-33 | P2-33 |
| 15 | 2 | P1-34 | P2-34 |
| SHLD | | P1-GND | P2-GND |
| | | W328 | |
| | | UD41J15 (P1) | UD31J13 (P2) |
| 1 | 1 | P1-4 | P2-4 |
| 1 | 2 | P1-22 | P2-22 |
| 2 | 1 | P1-6 | P2-6 |
| 2 | 2 | P1-24 | P2-24 |
| 3 | 1 | P1-7 | P2-7 |
| 3 | 2 | P1-25 | P2-25 |
| 4 | 1 | P1-9 | P2-9 |
| 4 | 2 | P1-27 | P2-27 |
| 5 | 1 | P1-1 1 | P2-1 1 |
| 5 | 2 | P1-29 | P2-29 |
| 6 | 1 | P1-13 | P2-13 |
| 6 | 2 | P1-31 | P2-31 |
| 7 | 1 | P1-5 | P2-5 |
| 7 | 2 | P1-23 | P2-23 |
| 8 | 1 | P1-8 | P2-8 |
| 8 | 2 | P1-26 | P2-26 |
| 9 | 1 | P1-12 | P2-12 |

1 Site dependent.
2 Used for testing only. Disconnected when not in use.
3 Supplied by vendor.
4 Adapters.
5 Wires tied back and insulated.
6 FAA RMS.
7 Power Monitor Filter 2A1FL1/5FL2 and/or 2A1FL2/105FL2 installed.
8 Used on redundant systems only.

Table 7-2. Running Wire List - Cont.

| Conductor No. | Conductor Aux. | FROM | TO |
|---|---|---|---|
| | | W328 | |
| | | UD41J15 (P1) | UD31J13 (P2) |
| 9 | 2 | P1-30 | P2-30 |
| 10 | 1 | P1-17 | P2-17 |
| 10 | 2 | P1-35 | P2-35 |
| 11 | 1 | P1-1 | P2-1 |
| 11 | 2 | P1-36 | P2-36 |
| 12 | 1 | P1-19 | P2-19 |
| 12 | 2 | P1-37 | P2-37 |
| 13 | 1 | P1-15 | P2-15 |
| 13 | 2 | P1-18 | P2-18 |
| 14 | 1 | P1-2 | P2-2 |
| 14 | 2 | P1-20 | P2-20 |
| 15 | 1 | P1-33 | P2-33 |
| 15 | 2 | P1-34 | P2-34 |
| SHLD | | P1-GND | P2-GND |
| | | W328 | |
| | | UD41J15 (P1) | UD1A27TB1 |
| 1 | 1 | P1-4 | TB1-13 |
| 1 | 2 | P1-22 | TB1-14 |
| 2 | 1 | P1-6 | TB1-15 |
| 2 | 2 | P1-24 | TB1-16 |
| 3 | 1 | P1-7 | TB1-17 |
| 3 | 2 | P1-25 | TB1-18 |
| 4 | 1 | P1-9 | TB1-19 |
| 4 | 2 | P1-27 | TB1-20 |
| 5 | 1 | P1-1 1 | TB1-21 |
| 5 | 2 | P1-29 | TB1-22 |
| 6 | 1 | P1-13 | TB1-23 |

1 Site dependent.
2 Used for testing only. Disconnected when not in use.
3 Supplied by vendor.
4 Adapters.
5 Wires tied back and insulated.
6 FAA RMS.
7 Power Monitor Filter 2A1FL1/5FL2 and/or 2A1FL2/105FL2 installed.
8 Used on redundant systems only.

Table 7-2. Running Wire List - Cont.

| Conductor No. | Conductor Aux. | FROM | TO |
|---|---|---|---|
| | | W328 | |
| | | UD41J15 (P1) | UD1A27TB1 |
| 6 | 2 | P1-31 | TB1-24 |
| 7 | 1 | P1-5 | TB1-25 |
| 7 | 2 | P1-23 | TB1-26 |
| 8 | 1 | P1-8 | TB1-27 |
| 8 | 2 | P1-26 | TB1-28 |
| 9 | 1 | P1-12 | TB1-29 |
| 9 | 2 | P1-30 | TB1-30 |
| 10 | 1 | P1-17 | TB1-31 |
| 10 | 2 | P1-35 | TB1-32 |
| 11 | 1 | P1-1 | TB1-33 |
| 11 | 2 | P1-19 | TB1-34 |
| 12 | 1 | P1-37 | TB1-35 |
| 12 | 2 | P1-20 | TB1-36 |
| 13 | 1 | P1-15 | SPARE |
| 13 | 2 | P1-18 | SPARE |
| 14 | 1 | P1-33 | SPARE |
| 14 | 2 | P1-34 | SPARE |
| 15 | 1 | P1-36 | SPARE |
| 15 | 2 | P1-2 | SPARE |
| SHLD | | P1-GND | SHLD A |
| | | 1W900 | |
| | | UD1CP1 (P1) DUPLEX JACK | UD5E1 (P2) |
| | | 1W901 | |
| | | UD1 DEMARC (P1) | UD105E1 (P2) |
| | | 2W5[1] | |
| | | W53P1 (P1) | UD2A3A3J3 (P2) |

1 Site dependent.
2 Used for testing only. Disconnected when not in use.
3 Supplied by vendor.
4 Adapters.
5 Wires tied back and insulated.
6 FAA RMS.
7 Power Monitor Filter 2A1FL1/5FL2 and/or 2A1FL2/105FL2 installed.
8 Used on redundant systems only.

Table 7-2. Running Wire List - Cont.

| Conductor No. | Conductor Aux. | FROM | TO |
|---|---|---|---|
| | | 2W6[1] | |
| | | W54P1 (P1) | UD2A3A4J2 (P2) |

1 Site dependent.
2 Used for testing only. Disconnected when not in use.
3 Supplied by vendor.
4 Adapters.
5 Wires tied back and insulated.
6 FAA RMS.
7 Power Monitor Filter 2A1FL1/5FL2 and/or 2A1FL2/105FL2 installed.
8 Used on redundant systems only.

Table 7-2. Running Wire List - Cont.

| Conductor No. | Conductor Aux. | FROM | TO |
|---|---|---|---|
| | | 2W14[1] | |
| | | W153P1 (P1) | UD2A3A7J3 (P2) |
| | | 2W15[1] | |
| | | W154P1 (P1) | UD2A3A8J2 (P2) |
| | | 2W20 | |
| | | UD2A3J3 | UD2A2J5 (P1) |
| 1 | 1 | J3-F | P1-F |
| 1 | 2 | J3-M | P1-M |
| 2 | 1 | J3-G | P1-G |
| 2 | 2 | J3-H | P1-H |
| 3 | 1 | J3-m | P1-m |
| 3 | 2 | J3-n | P1-n |
| 4 | 1 | J3-L | P1-L |
| 4 | 2 | J3-p | P1-p |
| 5 | 1 | J3-P | P1-P |
| 5 | 2 | J3-K | P1-K |
| 6 | 1 | J3-r | P1-r |
| 6 | 2 | J3-s | P1-s |
| SHLD | | SHLD | E1 |
| | | 2W20 | |
| | | UD2A3J3 | UD2A3A3J4 (P2) |
| 1 | 1 | J3-V | P2-6 |
| 1 | 2 | J3-W | P2-7 |
| | SHLD | E101 | E102 |
| 2 | 1 | J3-b | P2-8 |
| 2 | 2 | J3-c | P2-9 |
| | SHLD | E101 | E102 |
| | | E101 | J3-d |

1 Site dependent.
2 Used for testing only. Disconnected when not in use.
3 Supplied by vendor.
4 Adapters.
5 Wires tied back and insulated.
6 FAA RMS.
7 Power Monitor Filter 2A1FL1/5FL2 and/or 2A1FL2/105FL2 installed.
8 Used on redundant systems only.

Table 7-2. Running Wire List - Cont.

| Conductor No. | Conductor Aux. | FROM | TO |
|---|---|---|---|
| | | 2W20 | |
| | | UD2A3J3 | UD2A3A3J4 (P2) |
| 3 | 1 | NC | NC |
| 3 | 2 | NC | NC |
| | SHLD | | |
| 4 | 1 | J3-g | P2-14 |
| 4 | 2 | J3-h | P2-15 |
| | SHLD | SHLD | E102 |
| 5 | 1 | NC | NC |
| 5 | 2 | NC | NC |
| | SHLD | | |
| 6 | 1 | J3-T | P2-4 |
| 6 | 2 | J3-U | P2-2 |
| | SHLD | SHLD | E102 |
| 7 | 1 | NC | NC |
| 7 | 2 | NC | NC |
| | SHLD | | |
| SHLD | | SHLD | E102 |
| | | E102 | E2 |
| | | 2W20 | |
| | | UD2A3J3 | UD2A3A4J3 (P3) |
| 1 | 1 | J3-B | P3-1 |
| 1 | 2 | J3-C | P3-3 |
| 2 | 1 | NC | NC |
| 2 | 2 | NC | NC |
| SHLD | | SHLD | E3 |

1 Site dependent.
2 Used for testing only. Disconnected when not in use.
3 Supplied by vendor.
4 Adapters.
5 Wires tied back and insulated.
6 FAA RMS.
7 Power Monitor Filter 2A1FL1/5FL2 and/or 2A1FL2/105FL2 installed.
8 Used on redundant systems only.

Table 7-2. Running Wire List - Cont.

| Conductor No. | Conductor Aux. | FROM | TO |
|---|---|---|---|
| | | 2W21 | |
| | | UD2A1A5J1 (P1) | UD2A1J2 (P2) |
| 1 | 1 | P1-A | P2-F |
| 1 | 2 | P1-B | P2-M |
| | SHLD | P1-GND | P2-GND |
| 2 | 1 | P1-K | P2-G |
| 2 | 2 | NC | NC |
| | SHLD | P1-GND | P2-GND |
| 3 | 1 | NC | NC |
| 3 | 2 | NC | NC |
| | SHLD | | |
| 4 | 1 | P1-D | P2-H |
| 4 | 2 | NC | NC |
| | SHLD | P1-GND | P2-GND |
| 5 | 1 | P1-E | P2-P |
| 5 | 2 | P1-M | P2-K |
| | SHLD | P1-GND | P2-GND |
| 6 | 1 | NC | NC |
| 6 | 2 | NC | NC |
| | SHLD | | |
| 7 | 1 | NC | NC |
| 7 | 2 | NC | NC |
| | SHLD | | |
| SHLD | | P1-GND | P2-GND |
| 8 | | P1-B | P1-M |
| 9 | | P1-C | P1-H |
| 10 | | P1-L | P1-E |

1 Site dependent.
2 Used for testing only. Disconnected when not in use.
3 Supplied by vendor.
4 Adapters.
5 Wires tied back and insulated.
6 FAA RMS.
7 Power Monitor Filter 2A1FL1/5FL2 and/or 2A1FL2/105FL2 installed.
8 Used on redundant systems only.

Table 7-2. Running Wire List - Cont.

| Conductor No. | Conductor Aux. | FROM | TO |
|---|---|---|---|
| | | 2W21[7] | |
| | | UD2A1FL1J1[7] (P1) | UD2A1J2 (P2) |
| 1 | 1 | P1-A | P2-F |
| 1 | 2 | P1-B | P2-M |
| | SHLD | P1-GND | P2-GND |
| 2 | 1 | P1-K | P2-G |
| 2 | 2 | NC | NC |
| | SHLD | P1-GND | P2-GND |
| 3 | 1 | NC | NC |
| 3 | 2 | NC | NC |
| | SHLD | | |
| 4 | 1 | P1-D | P2-H |
| 4 | 2 | NC | NC |
| | SHLD | P1-GND | P2-GND |
| 5 | 1 | P1-E | P2-P |
| 5 | 2 | P1-M | P2-K |
| | SHLD | P1-GND | P2-GND |
| 6 | 1 | NC | NC |
| 6 | 2 | NC | NC |
| | SHLD | | |
| 7 | 1 | NC | NC |
| 7 | 2 | NC | NC |
| | SHLD | | |
| SHLD | | P1-GND | P2-GND |
| 8 | | P1-B | P1-M |
| 9 | | P1-C | P1-H |
| 10 | | P1-L | P1-E |

1 Site dependent.
2 Used for testing only. Disconnected when not in use.
3 Supplied by vendor.
4 Adapters.
5 Wires tied back and insulated.
6 FAA RMS.
7 Power Monitor Filter 2A1FL1/5FL2 and/or 2A1FL2/105FL2 installed.
8 Used on redundant systems only.

Table 7-2. Running Wire List - Cont.

| Conductor No. | Conductor Aux. | FROM | TO |
|---|---|---|---|
| | | 2W26 | |
| | | UD2A3J3 | UD2A2J5 (P1) |
| 1 | 1 | J3-F | P1-F |
| 1 | 2 | J3-M | P1-M |
| 2 | 1 | J3-G | P1-G |
| 2 | 2 | J3-H | P1-H |
| 3 | 1 | NC | NC |
| 3 | 2 | NC | NC |
| 4 | 1 | NC | NC |
| 4 | 2 | NC | NC |
| 5 | 1 | J3-P | P1-P |
| 5 | 2 | J3-K | P1-K |
| 6 | 1 | NC | NC |
| 6 | 2 | NC | NC |
| SHLD | | SHLD | E103 |
| | | 2W26 | |
| | | UD2A3J3 | UD2A3A7J4 (P2) |
| 1 | 1 | J3-V | P2-6 |
| 1 | 2 | J3-W | P2-7 |
| | SHLD | E101 | E102 |
| 2 | 1 | J3-b | P2-8 |
| 2 | 2 | J3-c | P2-9 |
| | SHLD | E101 | E102 |
| | | E101 | J3-d |
| 3 | 1 | NC | NC |
| 3 | 2 | NC | NC |
| | SHLD | | |
| 4 | 1 | J3-g | P2-14 |

1 Site dependent.
2 Used for testing only. Disconnected when not in use.
3 Supplied by vendor.
4 Adapters.
5 Wires tied back and insulated.
6 FAA RMS.
7 Power Monitor Filter 2A1FL1/5FL2 and/or 2A1FL2/105FL2 installed.
8 Used on redundant systems only.

Table 7-2. Running Wire List - Cont.

| Conductor No. | Conductor Aux. | FROM | TO |
|---|---|---|---|
| | | 2W26 | |
| | | UD2A3J3 | UD2A3A7J4 (P2) |
| 4 | 2 | J3-h | P2-15 |
| | SHLD | SHLD | E102 |
| 5 | 1 | NC | NC |
| 5 | 2 | NC | NC |
| | SHLD | | |
| 6 | 1 | J3-T | P2-4 |
| 6 | 2 | J3-U | P2-2 |
| | SHLD | SHLD | E101 |
| 7 | 1 | NC | NC |
| 7 | 2 | NC | NC |
| | SHLD | | |
| SHLD | | SHLD | E102 |
| | | E102 | E2 |
| | | 2W26 | |
| | | UD2A3J3 | UD2A3A8J3 (P3) |
| 1 | 1 | J3-B | P3-1 |
| 1 | 2 | J3-C | P3-3 |
| 2 | 1 | NC | NC |
| 2 | 2 | NC | NC |
| SHLD | | SHLD | E3 |
| | | 2W26 | |
| | | UD2A3J5 | UD2A2J5 (P1) |
| 1 | 1 | J5-M | P1-m |
| 1 | 2 | J5-N | P1-L |
| 2 | 1 | J5-U | P1-n |
| 2 | 2 | J5-Y | P1-p |

1 Site dependent.
2 Used for testing only. Disconnected when not in use.
3 Supplied by vendor.
4 Adapters.
5 Wires tied back and insulated.
6 FAA RMS.
7 Power Monitor Filter 2A1FL1/5FL2 and/or 2A1FL2/105FL2 installed.
8 Used on redundant systems only.

Table 7-2. Running Wire List - Cont.

| Conductor No. | Conductor Aux. | FROM | TO |
|---|---|---|---|
| | | 2W26 | |
| | | UD2A3J5 | UD2A2J5 (P1) |
| 3 | 1 | NC | NC |
| 3 | 2 | NC | NC |
| 4 | 1 | NC | NC |
| 4 | 2 | NC | NC |
| 5 | 1 | J5-F | P1-r |
| 5 | 2 | J5-G | P1-s |
| 6 | 1 | NC | NC |
| 6 | 2 | NC | NC |
| SHLD | | SHLD | E103 |
| | | E103 | E1 |
| | | 2W26 | |
| | | UD2A3J5 | UD2A3A3J4 (P4) |
| 1 | 1 | J5-A | P4-6 |
| 1 | 2 | J5-B | P4-7 |
| | SHLD | E104 | E105 |
| 2 | 1 | J5-D | P4-8 |
| 2 | 2 | J5-E | P4-9 |
| | SHLD | E104 | E105 |
| | | E104 | J5-C |
| 3 | 1 | NC | NC |
| 3 | 2 | NC | NC |
| | SHLD | | |
| 4 | 1 | J5-g | P4-14 |
| 4 | 2 | J5-h | P4-15 |
| | SHLD | SHLD | E105 |
| 5 | 1 | NC | NC |
| 5 | 2 | NC | NC |

1 Site dependent.
2 Used for testing only. Disconnected when not in use.
3 Supplied by vendor.
4 Adapters.
5 Wires tied back and insulated.
6 FAA RMS.
7 Power Monitor Filter 2A1FL1/5FL2 and/or 2A1FL2/105FL2 installed.
8 Used on redundant systems only.

Table 7-2. Running Wire List - Cont.

| Conductor No. | Conductor Aux. | FROM | TO |
|---|---|---|---|
| | | 2W26 | |
| | | UD2A3J5 | UD2A3A3J4 (P4) |
| | SHLD | | |
| 6 | 1 | J5-a | P4-4 |
| 6 | 2 | J5-b | P4-2 |
| | SHLD | SHLD | E105 |
| 7 | 1 | NC | NC |
| 7 | 2 | NC | NC |
| | SHLD | | |
| SHLD | | SHLD | E105 |
| | | E105 | E4 |
| | | 2W26 | |
| | | UD2A3J5 | UD2A3A4J3 (P5) |
| 1 | 1 | J5-H | P5-1 |
| 1 | 2 | J5-J | P5-3 |
| 2 | 1 | NC | NC |
| 2 | 2 | NC | NC |
| SHLD | | SHLD | E5 |
| | | 2W26 | |
| | | UD2A3J5 | UD2A3S1J1 (P6) |
| 1 | 1 | J5-S | E106 |
| 1 | 2 | J5-T | E107 |
| | SHLD | SHLD | E108 |
| 2 | 1 | J5-V | E106 |
| 2 | 2 | J5-W | E107 |
| | SHLD | SHLD | E108 |
| 3 | 1 | J5-X | P6-G |
| 3 | 2 | J5-R | P6-J |

1 Site dependent.
2 Used for testing only. Disconnected when not in use.
3 Supplied by vendor.
4 Adapters.
5 Wires tied back and insulated.
6 FAA RMS.
7 Power Monitor Filter 2A1FL1/5FL2 and/or 2A1FL2/105FL2 installed.
8 Used on redundant systems only.

Table 7-2. Running Wire List - Cont.

| Conductor No. | Conductor Aux. | FROM | TO |
|---|---|---|---|
| | | 2W26 | |
| | | UD2A3J5 | UD2A3S1J1 (P6) |
| | SHLD | SHLD | E108 |
| 4 | 1 | J5-P | E109 |
| 4 | 2 | J5-c | E109 |
| | SHLD | SHLD | E108 |
| 5 | 1 | NC | NC |
| 5 | 2 | NC | NC |
| | SHLD | | |
| 6 | 1 | NC | NC |
| 6 | 2 | NC | NC |
| | SHLD | | |
| 7 | 1 | NC | NC |
| 7 | 2 | NC | NC |
| | SHLD | | |
| SHLD | | SHLD | E108 |
| | | E106 | P6-A |
| | | E107 | P6-B |
| | | E109 | P6-H |
| | | E108 | E6 |
| | | 2W27 | |
| | | UD2A1A5J1 (P1)<br>UD2A1A9J1 (P3) | UD2A1J2 (P2) |
| 1 | 1 | P1-A | P2-F |
| 1 | 2 | P1-B | P2-M |
| | SHLD | E101 | SHLD |
| 2 | 1 | P1-K | P2-G |
| 2 | 2 | P1-J | NC |
| | SHLD | E101 | SHLD |

1 Site dependent.
2 Used for testing only. Disconnected when not in use.
3 Supplied by vendor.
4 Adapters.
5 Wires tied back and insulated.
6 FAA RMS.
7 Power Monitor Filter 2A1FL1/5FL2 and/or 2A1FL2/105FL2 installed.
8 Used on redundant systems only.

Table 7-2. Running Wire List - Cont.

| Conductor No. | Conductor Aux. | FROM | TO |
|---|---|---|---|
| | | 2W27 | |
| | | UD2A1A5J1 (P1)<br>UD2A1A9J1 (P3) | UD2A1J2 (P2) |
| 3 | 1 | P1-N | NC |
| 3 | 2 | P1-P | NC |
| | SHLD | SHLD | SHLD |
| 4 | 1 | P1-D | P2-H |
| 4 | 2 | P1-R | NC |
| | SHLD | E101 | SHLD |
| 5 | 1 | P1-E | P2-P |
| 5 | 2 | P1-M | P2-K |
| | SHLD | E101 | SHLD |
| 6 | 1 | P1-T | NC |
| 6 | 2 | P1-U | NC |
| | SHLD | SHLD | SHLD |
| 7 | 1 | P1-G | NC |
| 7 | 2 | P1-S | NC |
| | SHLD | SHLD | SHLD |
| SHLD | | E101 | SHLD |
| 8 | | P1-B | P1-M |
| 9 | | P1-C | P1-H |
| 10 | | P1-L | P1-E |
| | | E101 | E1 |
| 11 | 1 | P3-A | P2-m |
| 11 | 2 | P3-B | P2-L |
| | SHLD | E102 | SHLD |
| 12 | 1 | P3-K | P2-n |
| 12 | 2 | P3-J | NC |

1 Site dependent.
2 Used for testing only. Disconnected when not in use.
3 Supplied by vendor.
4 Adapters.
5 Wires tied back and insulated.
6 FAA RMS.
7 Power Monitor Filter 2A1FL1/5FL2 and/or 2A1FL2/105FL2 installed.
8 Used on redundant systems only.

Table 7-2. Running Wire List - Cont.

| Conductor No. | Conductor Aux. | FROM | TO |
|---|---|---|---|
| | | 2W27 | |
| | | UD2A1A5J1 (P1)<br>UD2A1A9J1 (P3) | UD2A1J2 (P2) |
| | SHLD | E102 | SHLD |
| 13 | 1 | P3-N | NC |
| 13 | 2 | P3-P | NC |
| | SHLD | SHLD | SHLD |
| 14 | 1 | P3-D | P2-p |
| 14 | 2 | P3-R | NC |
| | SHLD | E102 | SHLD |
| 15 | 1 | P3-E | P2-s |
| 15 | 2 | P3-M | P2-r |
| | SHLD | E102 | SHLD |
| 16 | 1 | P3-T | NC |
| 16 | 2 | P3-U | NC |
| | SHLD | SHLD | SHLD |
| 17 | 1 | P3-G | NC |
| 17 | 2 | P3-S | NC |
| | SHLD | SHLD | SHLD |
| SHLD | | E102 | SHLD |
| 18 | | P3-M | P3-B |
| 19 | | P3-H | P3-C |
| 20 | | P3-E | P3-L |
| | | P3-GND | E102 |
| | | 2W27[7] | |
| | | UD2A1FL1J1 (P1)<br>UD2A1FL2J1 (P3) | UD2A1J2 (P2) |
| 1 | 1 | P1-A | P2-F |
| 1 | 2 | P1-B | P2-M |

1 Site dependent.
2 Used for testing only. Disconnected when not in use.
3 Supplied by vendor.
4 Adapters.
5 Wires tied back and insulated.
6 FAA RMS.
7 Power Monitor Filter 2A1FL1/5FL2 and/or 2A1FL2/105FL2 installed.
8 Used on redundant systems only.

Table 7-2. Running Wire List - Cont.

| Conductor No. | Conductor Aux. | FROM | TO |
|---|---|---|---|
| | | 2W27[7] | |
| | | UD2A1FL1J1 (P1)<br>UD2A1FL2J1 (P3) | UD2A1J2 (P2) |
| | SHLD | E101 | SHLD |
| 2 | 1 | P1-K | P2-G |
| 2 | 2 | P1-J | NC |
| | SHLD | E101 | SHLD |
| 3 | 1 | P1-N | NC |
| 3 | 2 | P1-P | NC |
| | SHLD | SHLD | SHLD |
| 4 | 1 | P1-D | P2-H |
| 4 | 2 | P1-R | NC |
| | SHLD | E101 | SHLD |
| 5 | 1 | P1-E | P2-P |
| 5 | 2 | P1-M | P2-K |
| | SHLD | E101 | SHLD |
| 6 | 1 | P1-T | NC |
| 6 | 2 | P1-U | NC |
| | SHLD | SHLD | SHLD |
| 7 | 1 | P1-G | NC |
| 7 | 2 | P1-S | NC |
| | SHLD | SHLD | SHLD |
| SHLD | | E101 | SHLD |
| 8 | | P1-B | P1-M |
| 9 | | P1-C | P1-H |
| 10 | | P1-L | P1-E |
| | | E101 | E1 |
| 11 | 1 | P3-A | P2-m |

1 Site dependent.
2 Used for testing only. Disconnected when not in use.
3 Supplied by vendor.
4 Adapters.
5 Wires tied back and insulated.
6 FAA RMS.
7 Power Monitor Filter 2A1FL1/5FL2 and/or 2A1FL2/105FL2 installed.
8 Used on redundant systems only.

Table 7-2. Running Wire List - Cont.

| Conductor No. | Conductor Aux. | FROM | TO |
|---|---|---|---|
| | | 2W27[7] | |
| | | UD2A1FL1J1 (P1)<br>UD2A1FL2J1 (P3) | UD2A1J2 (P2) |
| 11 | 2 | P3-B | P2-L |
| | SHLD | E102 | SHLD |
| 12 | 1 | P3-K | P2-n |
| 12 | 2 | P3-J | NC |
| | SHLD | E102 | SHLD |
| 13 | 1 | P3-N | NC |
| 13 | 2 | P3-P | NC |
| | SHLD | SHLD | SHLD |
| 14 | 1 | P3-D | P2-p |
| 14 | 2 | P3-R | NC |
| | SHLD | E102 | SHLD |
| 15 | 1 | P3-E | P2-s |
| 15 | 2 | P3-M | P2-r |
| | SHLD | E102 | SHLD |
| 16 | 1 | P3-T | NC |
| 16 | 2 | P3-U | NC |
| | SHLD | SHLD | SHLD |
| 17 | 1 | P3-G | NC |
| 17 | 2 | P3-S | NC |
| | SHLD | SHLD | SHLD |
| SHLD | | E102 | SHLD |
| 18 | | P3-M | P3-B |
| 19 | | P3-H | P3-C |
| 20 | | P3-E | P3-L |
| | | P3-GND | E102 |

1 Site dependent.
2 Used for testing only. Disconnected when not in use.
3 Supplied by vendor.
4 Adapters.
5 Wires tied back and insulated.
6 FAA RMS.
7 Power Monitor Filter 2A1FL1/5FL2 and/or 2A1FL2/105FL2 installed.
8 Used on redundant systems only.

Table 7-2. Running Wire List - Cont.

| Conductor No. | Conductor Aux. | FROM | TO |
|---|---|---|---|
| | | 2W29[7] | |
| | | UD2A1A5J1 (P1) | UD2A1FL1J2 (P2) |
| 1 | 1 | P1-A | P2-F |
| 1 | 2 | P1-B | P2-M |
| | SHLD | P1-GND | P2-GND |
| 2 | 1 | P1-K | P2-G |
| 2 | 2 | NC | NC |
| | SHLD | P1-GND | P2-GND |
| 3 | 1 | NC | NC |
| 3 | 2 | NC | NC |
| | SHLD | | |
| 4 | 1 | P1-D | P2-H |
| 4 | 2 | NC | NC |
| | SHLD | P1-GND | P2-GND |
| 5 | 1 | P1-E | P2-P |
| 5 | 2 | P1-M | P2-K |
| | SHLD | P1-GND | P2-GND |
| 6 | 1 | NC | NC |
| 6 | 2 | NC | NC |
| | SHLD | | |
| 7 | 1 | NC | NC |
| 7 | 2 | NC | NC |
| | SHLD | | |
| SHLD | | P1-GND | P2-GND |
| 8 | | P1-B | P1-M |
| 9 | | P1-C | P1-H |
| 10 | | P1-L | P1-E |

1 Site dependent.
2 Used for testing only. Disconnected when not in use.
3 Supplied by vendor.
4 Adapters.
5 Wires tied back and insulated.
6 FAA RMS.
7 Power Monitor Filter 2A1FL1/5FL2 and/or 2A1FL2/105FL2 installed.
8 Used on redundant systems only.

Table 7-2. Running Wire List - Cont.

| Conductor No. | Conductor Aux. | FROM | TO |
|---|---|---|---|
| | | 2W30[7] | |
| | | UD2A1A9J1 (P1) | UD2A1FL2J2 (P2) |
| 1 | 1 | P1-A | P2-F |
| 1 | 2 | P1-B | P2-M |
| | SHLD | P1-GND | P2-GND |
| 2 | 1 | P1-K | P2-G |
| 2 | 2 | NC | NC |
| | SHLD | P1-GND | P2-GND |
| 3 | 1 | NC | NC |
| 3 | 2 | NC | NC |
| | SHLD | | |
| 4 | 1 | P1-D | P2-H |
| 4 | 2 | NC | NC |
| | SHLD | P1-GND | P2-GND |
| 5 | 1 | P1-E | P2-P |
| 5 | 2 | P1-M | P2-K |
| | SHLD | P1-GND | P2-GND |
| 6 | 1 | NC | NC |
| 6 | 2 | NC | NC |
| | SHLD | | |
| 7 | 1 | NC | NC |
| 7 | 2 | NC | NC |
| | SHLD | | |
| SHLD | | P1-GND | P2-GND |
| 8 | | P1-B | P1-M |
| 9 | | P1-C | P1-H |
| 10 | | P1-L | P1-E |

1 Site dependent.
2 Used for testing only. Disconnected when not in use.
3 Supplied by vendor.
4 Adapters.
5 Wires tied back and insulated.
6 FAA RMS.
7 Power Monitor Filter 2A1FL1/5FL2 and/or 2A1FL2/105FL2 installed.
8 Used on redundant systems only.

Table 7-2. Running Wire List - Cont.

| Conductor No. | Aux. | FROM | | TO |
|---|---|---|---|---|
| | | | 2W900 | |
| | | UD2A1A3A3J2 (P1) | | UD2A1A3FL1 IN (P2) |
| | | | 2W901 | |
| | | UD2A1A3A7J2 (P1) | | UD2A1A3FL2 IN (P2) |
| | | | 2A1W1 | |
| | | UD2A2J6 (P1) | | UD2A1J2 |
| | | P1-V | | P2-V |
| | | P1-W | | P2-W |
| | | P1-b | | P2-b |
| | | P1-c | | P2-c |
| | | P1-d | | P2-d |
| | | P1-e | | P2-e |
| | | P1-f | | P2-f |
| | | P1-k | | P2-k |
| | | P1-B | | P2-B |
| | | P1-C | | P2-C |
| | | P1-F | | P2-F |
| | | P1-G | | P2-G |
| | | P1-M | | P2-M |
| | | P1-H | | P2-H |
| | | P1-P | | P2-P |
| | | P1-K | | P2-K |
| | | P1-L | | P2-L |
| | | P1-T | | P2-T |
| | | P1-U | | P2-U |
| | | P1-m | | P2-m |
| | | P1-n | | P2-n |
| | | P1-p | | P2-p |
| | | P1-r | | P2-r |

1 Site dependent.
2 Used for testing only. Disconnected when not in use.
3 Supplied by vendor.
4 Adapters.
5 Wires tied back and insulated.
6 FAA RMS.
7 Power Monitor Filter 2A1FL1/5FL2 and/or 2A1FL2/105FL2 installed.
8 Used on redundant systems only.

Table 7-2. Running Wire List - Cont.

| Conductor No. | Conductor Aux. | FROM | | TO |
|---|---|---|---|---|
| | | | 2A1W1 | |
| | | UD2A2J6 (P1) | | UD2A1J2 |
| | | P1-s | | P2-s |
| | | P1-g | | P2-g |
| | | P1-h | | P2-h |
| | | | 2A1W2 | |
| | | UD2A2J2 (A1P2) | | UD2A1B1J2 (A1P5) |
| | | | (2A)1A3W2 | |
| | | UD2A3J1 | | UD2A2J1 (A3P4)<br>UD2A3B1J2 (A3P3) |
| | | | (2A)1A3W3 | |
| | | UD2A3J2 | | UD2A3J4 (A3A1P1)<br>UD2A3TB1<br>UD2A3B1J1 (A3P2)<br>UD2A3RT2J1 (A3S4J1)<br>(A3P5) |
| | | | 3W1 | |
| | | UD3A3J14 (P1) | | UD3A2J1 (P2) |
| | | | 3W2 | |
| | | UD3A3J27 (P1) | | UD3A11A1J1 (P2) |
| | | | 3W3 | |
| | | UD3A3J28 (P1) | | UD3A10A1J1 (P2) |
| | | | 3W4 | |
| | | UD3A3J29 (P1) | | UD3A8A1J1 (P2) |
| | | | 3W5 | |
| | | UD3A3J26 (P1) | | UD3A12J3 (P2) |
| | | | 3W6 | |
| | | UD3A3J31 (P1) | | UD3A5J1 (P2) |

1 Site dependent.
2 Used for testing only. Disconnected when not in use.
3 Supplied by vendor.
4 Adapters.
5 Wires tied back and insulated.
6 FAA RMS.
7 Power Monitor Filter 2A1FL1/5FL2 and/or 2A1FL2/105FL2 installed.
8 Used on redundant systems only.

Table 7-2. Running Wire List - Cont.

| Conductor No. | Conductor Aux. | FROM | | TO |
|---|---|---|---|---|
| | | | 3W7 | |
| | | UD3A3J15 (P1) | | UD3PS1A1J1 (P2) |
| | | | 3W8 | |
| | | UD3A3J16 (P1) | | UD3PS2A1J1 (P2) |
| | | | 3W9 | |
| | | UD3A3J19 (P1) | | UD3J1 (P2) |
| | | | 3W10 | |
| | | UD3A3J20 (P1) | | UD3J2 (P2) |
| | | | 3W11 | |
| | | UD3A3J21 (P1) | | UD3J3 (P2) |
| | | | 3W14 | |
| | | UD3A3J2 (P1) | | UD3A1A1J1 (P2) |
| | | | 3W15 | |
| | | UD3A3J3 (P1) | | UD3A1A1J2 (P2) |
| | | | 3W16 | |
| | | UD3A3J4 (P1) | | UD3A1A1J3 (P2) |
| | | | 3W17 | |
| | | UD3A3J7 (P1) | | UD3A1J1 (P2) |
| | | | 3W18 | |
| | | UD3A3J8 (P1) | | UD3A1J2 (P2) |
| | | | 3W19 | |
| | | UD3A3J9 (P1) | | UD3A1J3 (P2) |
| | | | 3W20 | |
| | | UD3A3J10 (P1) | | UD3A1J4 (P2) |
| | | | 3W21 | |
| | | UD3A3J32 (P1) | | UD3A4J1 (P2) |
| | | | 3W22 | |
| | | UD3J9 (P1) | | UD3A6J2 (P2) |

1 Site dependent.
2 Used for testing only. Disconnected when not in use.
3 Supplied by vendor.
4 Adapters.
5 Wires tied back and insulated.
6 FAA RMS.
7 Power Monitor Filter 2A1FL1/5FL2 and/or 2A1FL2/105FL2 installed.
8 Used on redundant systems only.

Table 7-2. Running Wire List - Cont.

| Conductor No. | Conductor Aux. | FROM | | TO |
|---|---|---|---|---|
| | | | 3W101 | |
| | | UD3J4 (P1) | | UD3A4J2 (P2) |
| | | | 3W102 | |
| | | UD3A4J4 (P1) | | UD3A5J2 (P2) |
| | | | 3W103 | |
| | | UD3AT1J1 (P1) | | UD3A5J3 (P2) |
| | | | 3W104 | |
| | | UD3AT1J2 (P1) | | UD3V1 RF DRIVE 1/P (P2) |
| | | | 3W105 | |
| | | UD3J5 (P1) | | UD3A5J4 (P2) |
| | | | 3W900 | |
| | | UD3A12E10 (P1) (XA8) (UD3XA8P1/P2) | | UD3A12E2 (P2) (XA8) (UD3A12E2/E10) |
| | | | 3W901 | |
| | | UD3A12E4 (P1) (XA11) (UD3XA11P1/P2) | | UD3A12E3 (P2) (XA11) (UD3XA11E3/E4) |
| | | | 3W902 | |
| | | UD3A12E7-A, A12E7-B, A12E8-A, A12E8-B | | UD3A7E18, A7E19, A7E20, A7E21 |
| | | | 3/103W904 | |
| | | UD3J8 (P1) | | UD3A3J6 (P2) |
| 1 | 1 | P1-1 | | P2-1 |
| 1 | 2 | P1-2 | | P2-2 |
| | SHLD | P1-3 | | NC |
| 2 | 1 | P1-4 | | P2-3 |
| 2 | 2 | P1-5 | | P2-4 |
| | SHLD | P1-6 | | NC |

1 Site dependent.
2 Used for testing only. Disconnected when not in use.
3 Supplied by vendor.
4 Adapters.
5 Wires tied back and insulated.
6 FAA RMS.
7 Power Monitor Filter 2A1FL1/5FL2 and/or 2A1FL2/105FL2 installed.
8 Used on redundant systems only.

Table 7-2. Running Wire List - Cont.

| Conductor No. | Conductor Aux. | FROM | TO |
|---|---|---|---|
| | | 3/103W904 | |
| | | UD3J8 (P1) | UD3A3J6 (P2) |
| 3 | 1 | P1-7 | P2-5 |
| 3 | 2 | P1-8 | P2-6 |
| | SHLD | P1-9 | NC |
| 4 | 1 | P1-10 | P2-7 |
| 4 | 2 | P1-11 | P2-8 |
| | SHLD | P1-12 | NC |
| 5 | 1 | P1-13 | P2-9 |
| 5 | 2 | P1-14 | P2-10 |
| | SHLD | P1-15 | NC |
| 6 | 1 | P1-16 | P2-11 |
| 6 | 2 | NC | P2-12 |
| | SHLD | NC | NC |
| | | 3/103W905 | |
| | | UD3J9 (P1) | UD3A3J11 (P2) |
| 1 | 1 | P1-2 | P2-2 |
| 1 | 2 | P1-1 | P2-1 |
| | SHLD | P1-3 | NC |
| 2 | 1 | P1-5 | P2-4 |
| 2 | 2 | P1-7 | P2-5 |
| | SHLD | P1-6 | NC |
| 3 | 1 | P1-4 | P2-3 |
| 3 | 2 | P1-8 | P2-6 |
| | SHLD | P1-9 | NC |
| 4 | 1 | P1-13 | P2-9 |
| 4 | 2 | P1-20 | P2-14 |
| | SHLD | P1-12 | NC |
| 5 | 1 | P1-16 | P2-11 |

[1] Site dependent.
[2] Used for testing only. Disconnected when not in use.
[3] Supplied by vendor.
[4] Adapters.
[5] Wires tied back and insulated.
[6] FAA RMS.
[7] Power Monitor Filter 2A1FL1/5FL2 and/or 2A1FL2/105FL2 installed.
[8] Used on redundant systems only.

Table 7-2. Running Wire List - Cont.

| Conductor No. | Conductor Aux. | FROM | TO |
|---|---|---|---|
| | | 3/103W905 | |
| | | UD3J9 (P1) | UD3A3J11 (P2) |
| 5 | 2 | P1-17 | P2-12 |
| | SHLD | P1-15 | NC |
| 6 | 1 | P1-26 | P2-18 |
| 6 | 2 | P1-19 | P2-13 |
| | SHLD | P1-27 | NC |
| 7 | 1 | P1-1 1 | P2-8 |
| 7 | 2 | P1-10 | P2-7 |
| | SHLD | P1-18 | NC |
| 8 | 1 | P1-28 | P2-39 |
| 8 | 2 | P1-14 | P2-10 |
| | SHLD | P1-21 | NC |
| 9 | 1 | P1-24 | P2-20 |
| 9 | 2 | P1-25 | P2-17 |
| | SHLD | P1-33 | NC |
| 10 | 1 | P1-31 | P2-21 |
| 10 | 2 | P1-23 | P2-16 |
| | SHLD | P1-30 | NC |
| 11 | 1 | P1-37 | P2-25 |
| 11 | 2 | P1-22 | P2-15 |
| | SHLD | P1-29 | NC |
| 12 | 1 | P1-44 | P2-30 |
| 12 | 2 | P1-35 | P2-24 |
| | SHLD | P1-36 | NC |
| 13 | 1 | P1-40 | P2-27 |
| 13 | 2 | P1-47 | P2-32 |
| | SHLD | P1-39 | NC |
| 14 | 1 | P1-49 | P2-33 |

1 Site dependent.
2 Used for testing only. Disconnected when not in use.
3 Supplied by vendor.
4 Adapters.
5 Wires tied back and insulated.
6 FAA RMS.
7 Power Monitor Filter 2A1FL1/5FL2 and/or 2A1FL2/105FL2 installed.
8 Used on redundant systems only.

Table 7-2. Running Wire List - Cont.

| Conductor No. | Conductor Aux. | FROM | | TO |
|---|---|---|---|---|
| | | UD3J9 (P1) | 3/103W905 | UD3A3J11 (P2) |
| 14 | 2 | P1-41 | | P2-28 |
| | SHLD | P1-42 | | NC |
| 15 | 1 | P1-46 | | P2-31 |
| 15 | 2 | P1-53 | | P2-36 |
| | SHLD | P1-45 | | NC |
| 16 | 1 | P1-54 | | P2-35 |
| 16 | 2 | P1-38 | | P2-26 |
| | SHLD | P1-57 | | NC |
| 17 | 1 | P1-34 | | P2-23 |
| 17 | 2 | P1-50 | | P2-34 |
| | SHLD | P1-51 | | NC |
| 18 | 1 | P1-43 | | P2-29 |
| 18 | 2 | P1-58 | | P2-22 |
| | SHLD | P1-52 | | NC |
| 19 | 1 | P1-55 | | P2-37 |
| 19 | 2 | P1-56 | | P2-38 |
| | SHLD | P1-48 | | NC |
| | | UD4/104A36 (P1) | 4/104W100 | UD4/104J15 (P2) |
| ADAPTER | | UD4/104DC2 IN | 4/104W101[4] | UD4/104A4J1 |
| | | UD4/104A4J2 (P1) | 4/104W102 | UD4/104A5J1 (P2) |
| | | UD4/104DC2-20dB (P1) | 4/104W103 | UD4/104A24J3 (P2) |

1 Site dependent.
2 Used for testing only. Disconnected when not in use.
3 Supplied by vendor.
4 Adapters.
5 Wires tied back and insulated.
6 FAA RMS.
7 Power Monitor Filter 2A1FL1/5FL2 and/or 2A1FL2/105FL2 installed.
8 Used on redundant systems only.

Table 7-2. Running Wire List - Cont.

| Conductor No. | Conductor Aux. | FROM | | TO |
|---|---|---|---|---|
| | | UD4/104A24J2 (P1) | 4/104W104 | UD4/104J16 (P2) |
| | | UD4/104A33 (P1) | 4/104W105 | UD4/104J18 (P2) |
| | | UD4/104A20J2 (P1) | 4/104W106 | UD4/104A34 (P2) |
| | | UD4/104A26J1 (P1) | 4/104W107 | UD4/104A20J3 (P2) |
| | | UD4/104DC1OUT | 4/104W108[4] | UD4/104A21J1 |
| | | UD4/104A22J1 (P1) | 4/104W109 | UD4/104A21J2 (P2) |
| | | UD4/104A22J2 (P1) | 4/104W110 | UD4/104J17 (P2) |
| | | UD4/104A22J4 (P1) | 4/104W111 | UD4/104A25J1 (P2) |
| | | UD4/104A22J5 (P1) | 4/104W112 | UD4/104A23J1 (P2) |
| | | UD4/104A24J1 (P1) | 4/104W113 | UD4/104A23J2 (P2) |
| | | UD4/104A22J3 (P1) | 4/104W114 | UD4/104A1J3 (P2) |
| | | UD4/104A1J2 (P1) | 4/104W115 | UD4/104A5J2 (P2) |
| | | UD4/104A5J6 (P1) | 4/104W116 | UD4/104A27J2 (P2) |
| | | UD4/104A5J5 (P1) | 4/104W117 | UD4/104A27J1 (P2) |

1 Site dependent.
2 Used for testing only. Disconnected when not in use.
3 Supplied by vendor.
4 Adapters.
5 Wires tied back and insulated.
6 FAA RMS.
7 Power Monitor Filter 2A1FL1/5FL2 and/or 2A1FL2/105FL2 installed.
8 Used on redundant systems only.

Table 7-2. Running Wire List - Cont.

| Conductor No. | Conductor Aux. | FROM | | TO |
|---|---|---|---|---|
| | | UD4/104A27J5 (P1) | 4/104W118 | UD4/104DC1-40dB (P2) |
| | | UD4/104A24J4 (P1) | 4/104W119 | UD4/104A27J8 (P2) |
| | | UD4/104A22J7 (P1) | 4/104W120 | UD4/104A27J3 (P2) |
| | | UD4/104A23J3 (P1) | 4/104W121 | UD4/104A27J6 (P2) |
| | | UD4/104A23J4 (P1) | 4/104W122 | UD4/104A27J7 (P2) |
| | | UD4/104A27COM (P1) | 4/104W123 | UD4/104A29J1 (P2) |
| | | UD4/104A22J6 (P1) | 4/104W128 | UD4/104A27J4 (P2) |
| | | UD4/104A1J1 (P1) | 4/104W129 | UD4/104J19 (P2) |
| | | UD4/104A20J4 (P1) | 4/104W132 | UD4/104J25 (P2) |
| | | UD4/104A5J3 (P1) | 4/104W200 | UD4/104A6J1 (P2) |
| | | UD4/104A5J7 (P1) | 4/104W201[1] | UD4/104A28J1 (P2) |
| | | UD4/104A6J2 (P1) | 4/104W202 | UD4/104A7J1 (P2) |
| | | UD4/104A6J3 (P1) | 4/104W203 | UD4/104A12J1 (P2) |

1 Site dependent.
2 Used for testing only. Disconnected when not in use.
3 Supplied by vendor.
4 Adapters.
5 Wires tied back and insulated.
6 FAA RMS.
7 Power Monitor Filter 2A1FL1/5FL2 and/or 2A1FL2/105FL2 installed.
8 Used on redundant systems only.

Table 7-2. Running Wire List - Cont.

| Conductor No. | Conductor Aux. | FROM | | TO |
|---|---|---|---|---|
| | | | 4/104W204 | |
| | | UD4/104A6J4 (P1) | | UD4/104A28J6 (P2) |
| | | | 4/104W205 | |
| | | UD4/104A7J2 (P1) | | UD4/104A8J1 (P2) |
| | | | 4/104W206 | |
| | | UD4/104A8J2 (P1) | | UD4/104A9J1 (P2) |
| | | | 4/104W207 | |
| | | UD4/104A8J3 (P1) | | UD4/104A28J4 (P2) |
| | | | 4/104W208 | |
| | | UD4/104A9J2 (P1) | | UD4/104A10J1 (P2) |
| | | | 4/104W209 | |
| | | UD4/104A9J3 (P1) | | UD4/104A28J2 (P2) |
| | | | 4/104W210 | |
| | | UD4/104A9J4 (P1) | | UD4/104A28J3 (P2) |
| | | | 4/104W211 | |
| | | UD4/104A5J4 (P1) | | UD4/104A14J1 (P2) |
| | | | 4/104W212 | |
| | | UD4/104A14J2 (P1) | | UD4/104A15J1 (P2) |
| | | | 4/104W213 | |
| | | UD4/104A14J3 (P1) | | UD4/104A16J1 (P2) |
| | | | 4/104W214 | |
| | | UD4/104A14J5 (P1) | | UD4/104A28J8 (P2) |
| | | | 4/104W215 | |
| | | UD4/104A14J4 (P1) | | UD4/104A28J7 (P2) |
| | | | 4/104W216 | |
| | | UD4/104A15J2 (P1) | | UD4/104A17J1 (P2) |
| | | | 4/104W217 | |
| | | UD4/104A16J2 (P1) | | UD4/104A18J1 (P2) |

1 Site dependent.
2 Used for testing only. Disconnected when not in use.
3 Supplied by vendor.
4 Adapters.
5 Wires tied back and insulated.
6 FAA RMS.
7 Power Monitor Filter 2A1FL1/5FL2 and/or 2A1FL2/105FL2 installed.
8 Used on redundant systems only.

Table 7-2. Running Wire List - Cont.

| Conductor No. | Conductor Aux. | FROM | | TO |
|---|---|---|---|---|
| | | UD4/104A15J3 (P1) | 4/104W218 | UD4/104A28J9 (P2) |
| | | UD4/104A16J3 (P1) | 4/104W219[1] | UD4/104A28J10 (P2) |
| | | UD4/104A10J3 (P1) | 4/104W220 | UD4/104A28J5 (P2) |
| | | UD4/104A28 COM (P1) | 4/104W221 | UD4/104A30J1 (P2) |
| | | UD4/104A1J4 (P1) | 4/104W222 | UD4/104A10J2 (P2) |
| | | UD4/104A13J9 (P1) | 4/104W300 | UD4/104A12J2 (P2) |
| | | UD4/104A12J5 (P1) | 4/104W302 | UD4/104A19J5 (P2) |
| | | UD4/104A12J6 (P1) | 4/104W303 | UD4/104A31J6 (P2) |
| | | UD4/104A17J2 (P1) | 4/104W304 | UD4/104A19J1 (P2) |
| | | UD4/104A18J2 (P1) | 4/104W306 | UD4/104A19J3 (P2) |
| | | UD4/104A17J4 (P1) | 4/104W308 | UD4/104A31J7 (P2) |
| | | UD4/104A18J4 (P1) | 4/104W309 | UD4/104A31J8 (P2) |
| | | UD4/104A29J2 (P1) | 4/104W310 | UD4/104A31J4 (P2) |
| | | UD4/104A30J2 (P1) | 4/104W311 | UD4/104A31J5 (P2) |

1 Site dependent.
2 Used for testing only. Disconnected when not in use.
3 Supplied by vendor.
4 Adapters.
5 Wires tied back and insulated.
6 FAA RMS.
7 Power Monitor Filter 2A1FL1/5FL2 and/or 2A1FL2/105FL2 installed.
8 Used on redundant systems only.

Table 7-2. Running Wire List - Cont.

| Conductor No. | Conductor Aux. | FROM | | TO |
|---|---|---|---|---|
| | | UD4/104A11J3 (P1) | 4/104W315 | UD4/104A10J4 (P2) |
| | | UD4/104A11J2 (P1) | 4/104W316 | UD4/104A10J6 (P2) |
| | | UD4/104A11J1 (P1) | 4/104W319 | UD4/104A12J4 (P2) |
| | | UD4/104A10J5 (P1) | 4/104W320 | UD4/104J9 (P2) |
| | | UD4/104A10J7 (P1) | 4/104W321 | UD4/104J10 (P2) |
| | | UD4/104A12J3 (P1) | 4/104W322 | UD4/104J14 (P2) |
| | | UD4/104A31J9 (P1) | 4/104W323 | UD4/104J11 (P2) |
| | | UD4/104A23J6 (P1) | 4/104W400 | UD4/104A32J5 (P2) |
| 1 | 1 | P1-1 | | P2-8 |
| 1 | 2 | P1-2 | | P2-7 |
| 2 | 1 | P1-3 | | P2-6 |
| 2 | 2 | P1-4 | | P2-5 |
| 3 | 2 | P1-6 | | P2-3 |
| 3 | 1 | P1-5 | | P2-4 |
| 4 | 1 | P1-7 | | P2-2 |
| 4 | 2 | P1-8 | | P2-1 |
| 5 | 1 | P1-10 | | P2-14 |
| 5 | 2 | P1-9 | | P2-15 |
| 6 | 1 | P1-12 | | P2-12 |
| 6 | 2 | P1-1 1 | | P2-13 |

1 Site dependent.
2 Used for testing only. Disconnected when not in use.
3 Supplied by vendor.
4 Adapters.
5 Wires tied back and insulated.
6 FAA RMS.
7 Power Monitor Filter 2A1FL1/5FL2 and/or 2A1FL2/105FL2 installed.
8 Used on redundant systems only.

Table 7-2. Running Wire List - Cont.

| Conductor No. | Conductor Aux. | FROM | TO |
|---|---|---|---|
| | | 4/104W400 | |
| | | UD4/104A23J6 (P1) | UD4/104A32J5 (P2) |
| 7 | 1 | P1-14 | P2-10 |
| 7 | 2 | P1-13 | P2-11 |
| 8 | 1[5] | | |
| 8 | 2[5] | | |
| 9 | 1[5] | | |
| 9 | 2[5] | | |
| SHLD | | SHLD A | E101 |
| | | E101 | P2-GND |
| | | 4/104W401 | |
| | | UD4/104A22J8 (P1) | UD4/104A32J8 (P2) |
| 1 | 1 | P1-7 | P2-4 |
| 1 | 2 | P1-6 | P2-5 |
| 2 | 1 | P1-9 | P2-2 |
| 2 | 2 | P1-8 | P2-3 |
| 3 | 1 | P1-11 | P2-6 |
| 3 | 2 | P1-10 | P2-1 |
| 4 | 1 | P1-13 | P2-7 |
| 4 | 2 | P1-12 | P2-8 |
| SHLD | | SHLD B | E101 |
| | | E101 | P2-GND |
| 1 | 1 | P1-2 | TB3H-3 |
| 1 | 2 | P1-1 | TB3H-G |
| 2 | 1 | P1-3 | TB3H-2 |
| 2 | 2 | P1-15 | TB3H-G |
| 3 | 1 | P1-4 | TB3H-5 |
| 3 | 2 | P1-5 | TB3H-G |
| 4 | 1[5] | | |

1 Site dependent.
2 Used for testing only. Disconnected when not in use.
3 Supplied by vendor.
4 Adapters.
5 Wires tied back and insulated.
6 FAA RMS.
7 Power Monitor Filter 2A1FL1/5FL2 and/or 2A1FL2/105FL2 installed.
8 Used on redundant systems only.

Table 7-2. Running Wire List - Cont.

| Conductor No. | Conductor Aux. | FROM | | TO |
|---|---|---|---|---|
| | | | 4/104W401 | |
| | | UD4/104A22J8 (P1) | | UD4/104A32J8 (P2) |
| 4 | 2[5] | | | |
| SHLD | | SHLD A | | E102 |
| | | E102 | | P1-GND |
| | | | 4/104W402[1] /4W424[1] | |
| | | UD4/104A32J10 (P1) | | UD4/104A24J5 (P2) |
| 1 | 1 | P1-5 | | P2-8 |
| 1 | 2 | P1-4 | | P2-9 |
| SHLD | | SHLD A | | E101 |
| 1 | 1 | P1-3 | | P3-7 |
| 1 | 2 | P1-2 | | P3-8 |
| SHLD | | SHLD A | | E101 |
| | | E101 | | P1-GND |
| | | | 4/104W402[1] /4W424[1] | |
| | | UD4/104A24J5 (P2) | | UD4/104TB3H |
| 1 | 1 | P2-2 | | TB3H-3 |
| 1 | 2 | P2-1 | | TB3H-G |
| 2 | 1 | P2-3 | | TB3H-2 |
| 2 | 2 | P2-6 | | TB3H-G |
| SHLD | | SHLD A | | E102 |
| | | E102 | | P2-GND |
| | | | 4/104W402[1] /4W424[1] | |
| | | UD4/104A25J2 (P3) | | UD4/104TB3B |
| 1 | 1 | P3-2 | | TB3B-3 |
| 1 | 2 | P3-1 | | TB3B-G |

1 Site dependent.
2 Used for testing only. Disconnected when not in use.
3 Supplied by vendor.
4 Adapters.
5 Wires tied back and insulated.
6 FAA RMS.
7 Power Monitor Filter 2A1FL1/5FL2 and/or 2A1FL2/105FL2 installed.
8 Used on redundant systems only.

Table 7-2. Running Wire List - Cont.

| Conductor No. | Conductor Aux. | FROM | | TO |
|---|---|---|---|---|
| | | | 4/104W402[1] /4W424[1] | |
| | | UD4/104A25J2 (P3) | | UD4/104TB3B |
| 2 | 1 | P3-5 | | TB3B-5 |
| 2 | 2 | P3-9 | | TB3B-G |
| 3 | 1 | P3-4 | | TB3B-4 |
| 3 | 2[5] | | | |
| SHLD | | SHLD A | | E103 |
| | | E103 | | P3-GND |
| | | | 4/104W402[1] /4W424[1] | |
| | | UD4/104A32J10 (P1) | | UD4/104A19J7 (P4) |
| 1 | 1 | P1-1 | | P4-1 |
| 1 | 2 | P1-6 | | P4-2 |
| SHLD | | SHLD B | | P4-GND |
| | | | 4/104W403 | |
| | | UD4/104A28J11 (P1) | | UD4/104A32J12 (P2) |
| 1 | 1 | P1-G | | P2-2 |
| 1 | 2 | P1-H | | P2-1 |
| 2 | 1 | P1-E | | P2-4 |
| 2 | 2 | P1-F | | P2-3 |
| 3 | 1 | P1-C | | P2-6 |
| 3 | 2 | P1-D | | P2-5 |
| 4 | 1 | P1-A | | P2-8 |
| 4 | 2 | P1-B | | P2-7 |
| SHLD | | SHLD B | | E101 |
| | | E101 | | P2-GND |
| 1 | 1 | P1-K | | TB2G-5 |
| 1 | 2 | P1-M | | TB2G-G |

1 Site dependent.
2 Used for testing only. Disconnected when not in use.
3 Supplied by vendor.
4 Adapters.
5 Wires tied back and insulated.
6 FAA RMS.
7 Power Monitor Filter 2A1FL1/5FL2 and/or 2A1FL2/105FL2 installed.
8 Used on redundant systems only.

Table 7-2. Running Wire List - Cont.

| Conductor No. | Conductor Aux. | FROM | TO |
|---|---|---|---|
| | | 4/104W403 | |
| | | UD4/104A28J11 (P1) | UD4/104A32J12 (P2) |
| 2 | 1 | P1-L | TB2G-3 |
| 2 | 2 | P1-R | TB2G-G |
| SHLD | | SHLD A | E102 |
| | | E102 | P1-GND |
| | | 4/104W404 | |
| | | UD4/104A27J11 (P1) | UD4/104A32J11 (P2) |
| 1 | 1 | P1-G | P2-2 |
| 1 | 2 | P1-H | P2-1 |
| 2 | 1 | P1-E | P2-4 |
| 2 | 2 | P1-F | P2-3 |
| 3 | 1 | P1-C | P2-6 |
| 3 | 2 | P1-D | P2-5 |
| 4 | 1 | P1-A | P2-8 |
| 4 | 2 | P1-B | P2-7 |
| SHLD | | SHLD B | E101 |
| | | E101 | P2-GND |
| 1 | 1 | P1-K | TB3G-5 |
| 1 | 2 | P1-M | TB3G-G |
| 2 | 1 | P1-L | TB3G-3 |
| 2 | 2 | P1-R | TB3G-G |
| SHLD | | SHLD A | E102 |
| | | E102 | P1-GND |
| | | 4/104W405 | |
| | | UD4/104A1J5 (P1) | UD4/104A32J7 (P2) |
| 1 | 1 | P1-15 | P2-5 |
| 1 | 2 | P1-16 | P2-4 |

1 Site dependent.
2 Used for testing only. Disconnected when not in use.
3 Supplied by vendor.
4 Adapters.
5 Wires tied back and insulated.
6 FAA RMS.
7 Power Monitor Filter 2A1FL1/5FL2 and/or 2A1FL2/105FL2 installed.
8 Used on redundant systems only.

Table 7-2. Running Wire List - Cont.

| Conductor No. | Conductor Aux. | FROM | TO |
|---|---|---|---|
| | | 4/104W405 | |
| | | UD4/104A1J5 (P1) | UD4/104A32J7 (P2) |
| | SHLD | SHLD A | E101 |
| 2 | 1 | P1-4 | P2-16 |
| 2 | 2 | P1-23 | P2-34 |
| | SHLD | SHLD A | E101 |
| 3 | 1 | P1-5 | P2-15 |
| 3 | 2 | P1-6 | P2-14 |
| | | SHLD A | E101 |
| 4 | 1 | P1-30 | P2-27 |
| 4 | 2 | P1-31 | P2-26 |
| | SHLD | SHLD A | E101 |
| | | E101 | P1-GND |
| 5 | 1 | P1-32 | P2-24 |
| 5 | 2 | P1-33 | P2-25 |
| | SHLD | SHLD B | E102 |
| 6 | 1 | P1-7 | P2-13 |
| 6 | 2 | P1-8 | P2-12 |
| | SHLD | SHLD B | E102 |
| 7 | 1 | P1-9 | P2-1 1 |
| 7 | 2 | P1-10 | P2-10 |
| | SHLD | SHLD B | E102 |
| 8 | 1 | P1-1 1 | P2-9 |
| 8 | 2 | P1-12 | P2-8 |
| | SHLD | SHLD B | E102 |
| 9 | 1 | P1-13 | P2-7 |
| 9 | 2 | P1-14 | P2-6 |
| | SHLD | SHLD B | E102 |
| 10 | 1 | P1-24 | P2-33 |

1 Site dependent.
2 Used for testing only. Disconnected when not in use.
3 Supplied by vendor.
4 Adapters.
5 Wires tied back and insulated.
6 FAA RMS.
7 Power Monitor Filter 2A1FL1/5FL2 and/or 2A1FL2/105FL2 installed.
8 Used on redundant systems only.

Table 7-2. Running Wire List - Cont.

| Conductor No. | Conductor Aux. | FROM | TO |
|---|---|---|---|
| | | 4/104W405 | |
| | | UD4/104A1J5 (P1) | UD4/104A32J7 (P2) |
| 10 | 2 | P1-25 | P2-32 |
| | SHLD | SHLD B | E102 |
| 11 | 1 | P1-26 | P2-31 |
| 11 | 2 | P1-27 | P2-30 |
| | SHLD | SHLD B | E102 |
| 12 | 1 | P1-28 | P2-29 |
| 12 | 2 | P1-29 | P2-28 |
| | SHLD | SHLD B | E102 |
| 13 | 1 | P1-1 | P2-19 |
| 13 | 2 | P1-20 | P2-37 |
| | SHLD | SHLD B | E102 |
| | | E102 | P2-GND |
| 14 | 1 | P1-19 | P2-1 |
| 14 | 2 | P1-37 | P2-20 |
| | SHLD | SHLD A | P1-36 |
| 15 | 1[5] | | |
| 15 | 2[5] | | |
| | SHLD | | |
| 16 | 1[5] | | |
| 16 | 2[5] | | |
| | SHLD | | |
| 17 | 1[5] | | |
| 17 | 2[5] | | |
| | SHLD | | |
| 18 | 1[5] | | |
| 18 | 2[5] | | |
| | SHLD | | |

1 Site dependent.
2 Used for testing only. Disconnected when not in use.
3 Supplied by vendor.
4 Adapters.
5 Wires tied back and insulated.
6 FAA RMS.
7 Power Monitor Filter 2A1FL1/5FL2 and/or 2A1FL2/105FL2 installed.
8 Used on redundant systems only.

Table 7-2. Running Wire List - Cont.

| Conductor No. | Conductor Aux. | FROM | TO |
|---|---|---|---|
| | | 4/104W405 | |
| | | UD4/104A1J5 (P1) | UD4/104A32J7 (P2) |
| 19 | 1[5] | | |
| 19 | 2[5] | | |
| SHLD | | SHLD B | E103 |
| | | E103 | P2-GND |
| | | 4/104W406 | |
| | | UD4/104A31J1 (P1) | UD4/104A32J1 (P2) |
| 1 | 1 | P1-1 | P2-13 |
| 1 | 2 | P1-14 | P2-25 |
| 2 | 1 | P1-2 | P2-12 |
| 2 | 2 | P1-15 | P2-24 |
| 3 | 1 | P1-3 | P2-1 1 |
| 3 | 2 | P1-16 | P2-23 |
| 4 | 1 | P1-5 | P2-9 |
| 4 | 2 | P1-18 | P2-21 |
| 5 | 1 | P1-6 | P2-8 |
| 5 | 2 | P1-19 | P2-20 |
| 6 | 1 | P1-7 | P2-7 |
| 6 | 2 | P1-20 | P2-19 |
| 7 | 1[5] | | |
| 7 | 2[5] | | |
| 8 | 1 | P1-10 | P2-16 |
| 8 | 2 | P1-23 | P2-4 |
| 9 | 1 | P1-1 1 | P2-3 |
| 9 | 2 | P1-24 | P2-15 |
| 10 | 1[5] | | |
| 10 | 2[5] | | |
| 11 | 1[5] | | |

1 Site dependent.
2 Used for testing only. Disconnected when not in use.
3 Supplied by vendor.
4 Adapters.
5 Wires tied back and insulated.
6 FAA RMS.
7 Power Monitor Filter 2A1FL1/5FL2 and/or 2A1FL2/105FL2 installed.
8 Used on redundant systems only.

Table 7-2. Running Wire List - Cont.

| Conductor No. | Conductor Aux. | FROM | TO |
|---|---|---|---|
| | | 4/104W406 | |
| | | UD4/104A31J1 (P1) | UD4/104A32J1 (P2) |
| 11 | 2[5] | | |
| 12 | 1[5] | | |
| 12 | 2[5] | | |
| SHLD | | SHLD B | E101 |
| | | E101 | P2-1 |
| 1 | 1 | P1-9 | P2-5 |
| 1 | 2 | P1-22 | P2-17 |
| SHLD | | SHLD B | E102 |
| | | E102 | P2-GND |
| | | 4/104W407 | |
| | | UD4/104A31J2 (P1) | UD4/104A32J2 (P2) |
| 1 | 1 | P1-8 | P2-13 |
| 1 | 2 | P1-21 | P2-25 |
| 2 | 1 | P1-7 | P2-12 |
| 2 | 2 | P1-20 | P2-24 |
| 3 | 1 | P1-6 | P2-11 |
| 3 | 2 | P1-19 | P2-23 |
| 4 | 1 | P1-5 | P2-10 |
| 4 | 2 | P1-18 | P2-22 |
| 5 | 1 | P1-4 | P2-9 |
| 5 | 2 | P1-17 | P2-21 |
| 6 | 1 | P1-3 | P2-8 |
| 6 | 2 | P1-16 | P2-20 |
| 7 | 1 | P1-2 | P2-7 |
| 7 | 2 | P1-15 | P2-19 |
| 8 | 1 | P1-1 | P2-6 |
| 8 | 2 | P1-14 | P2-18 |

1 Site dependent.
2 Used for testing only. Disconnected when not in use.
3 Supplied by vendor.
4 Adapters.
5 Wires tied back and insulated.
6 FAA RMS.
7 Power Monitor Filter 2A1FL1/5FL2 and/or 2A1FL2/105FL2 installed.
8 Used on redundant systems only.

Table 7-2. Running Wire List - Cont.

| Conductor No. | Conductor Aux. | FROM | TO |
|---|---|---|---|
| | | 4/104W407 | |
| | | UD4/104A31J2 (P1) | UD4/104A32J2 (P2) |
| 9 | 1 | | |
| 9 | 2[5] | | |
| 10 | 1[5] | | |
| 10 | 2[5] | | |
| 11 | 1[5] | | |
| 11 | 2[5] | | |
| 12 | 1[5] | | |
| 12 | 2[5] | | |
| SHLD | | SHLD A | E101 |
| | | E101 | P1-10 |
| | | 4/104W408 | |
| | | UD4/104A11J5 (P1) | UD4/104J20 (P2) |
| 1 | 1 | P1-20 | J20-20 |
| 1 | 2 | P1-1 | J20-1 |
| | SHLD | SHLD B | J20-GND |
| 2 | 1 | P1-21 | J20-21 |
| 2 | 2 | P1-2 | J20-2 |
| | SHLD | SHLD B | J20-GND |
| 3 | 1 | P1-22 | J20-22 |
| 3 | 2 | P1-3 | J20-3 |
| | SHLD | SHLD B | J20-GND |
| 4 | 1 | P1-23 | J20-23 |
| 4 | 2 | P1-4 | J20-4 |
| | SHLD | SHLD B | J20-GND |
| 5 | 1 | P1-24 | J20-24 |
| 5 | 2 | P1-5 | J20-5 |
| | SHLD | SHLD B | J20-GND |

1 Site dependent.
2 Used for testing only. Disconnected when not in use.
3 Supplied by vendor.
4 Adapters.
5 Wires tied back and insulated.
6 FAA RMS.
7 Power Monitor Filter 2A1FL1/5FL2 and/or 2A1FL2/105FL2 installed.
8 Used on redundant systems only.

Table 7-2. Running Wire List - Cont.

| Conductor No. | Conductor Aux. | FROM | TO |
|---|---|---|---|
| | | 4/104W408 | |
| | | UD4/104A11J5 (P1) | UD4/104J20 (P2) |
| 6 | 1 | P1-25 | J20-25 |
| 6 | 2 | P1-6 | J20-6 |
| | SHLD | SHLD B | J20-GND |
| 7 | 1 | P1-26 | J20-26 |
| 7 | 2 | P1-7 | J20-7 |
| | SHLD | SHLD B | J20-GND |
| 8 | 1 | P1-30 | J20-27 |
| 8 | 2 | P1-1 1 | J20-8 |
| | SHLD | SHLD B | J20-GND |
| 9 | 1 | P1-31 | J20-28 |
| 9 | 2 | P1-12 | J20-9 |
| | SHLD | SHLD B | J20-GND |
| 10 | 1 | P1-32 | J20-29 |
| 10 | 2 | P1-13 | J20-10 |
| | SHLD | SHLD B | J20-GND |
| 11 | 1 | P1-28 | J20-30 |
| 11 | 2 | P1-9 | J20-1 1 |
| | SHLD | SHLD B | J20-GND |
| 12 | 1 | P1-29 | J20-31 |
| 12 | 2 | P1-10 | J20-12 |
| | SHLD | SHLD B | J20-GND |
| 13 | 1 | P1-27 | J20-32 |
| 13 | 2 | P1-8 | J20-13 |
| | SHLD | SHLD B | J20-GND |
| 14 | 1 | P1-33 | J20-33 |
| 14 | 2 | P1-14 | J20-14 |
| | SHLD | SHLD B | J20-GND |

1 Site dependent.
2 Used for testing only. Disconnected when not in use.
3 Supplied by vendor.
4 Adapters.
5 Wires tied back and insulated.
6 FAA RMS.
7 Power Monitor Filter 2A1FL1/5FL2 and/or 2A1FL2/105FL2 installed.
8 Used on redundant systems only.

Table 7-2. Running Wire List - Cont.

| Conductor No. | Conductor Aux. | FROM | TO |
|---|---|---|---|
| | | 4/104W408 | |
| | | UD4/104A11J5 (P1) | UD4/104J20 (P2) |
| 15 | 1 | P1-34 | J20-34 |
| 15 | 2 | P1-15 | J20-15 |
| | SHLD | SHLD B | J20-GND |
| 16 | 1 | P1-35 | J20-35 |
| 16 | 2 | P1-16 | J20-16 |
| | SHLD | SHLD B | J20-GND |
| 17 | 1 | P1-36 | J20-36 |
| 17 | 2 | P1-17 | J20-17 |
| | SHLD | SHLD B | J20-GND |
| 18 | 1 | P1-37 | J20-37 |
| 18 | 2 | P1-18 | J20-18 |
| | SHLD | SHLD B | J20-GND |
| 19 | 1 | P1-19 | J20-19 |
| 19 | 2[5] | | |
| | SHLD | SHLD B | J20-GND |
| SHLD | | SHLD B | J20-GND |
| | | 4/104W409 | |
| | | UD4/104A13J8 (P1) | UD4/104J23 (P2) |
| 1 | 1 | P1-20 | J23-20 |
| 1 | 2 | P1-1 | J23-1 |
| 2 | 1 | P1-21 | J23-21 |
| 2 | 2 | P1-2 | J23-2 |
| 3 | 1 | P1-22 | J23-22 |
| 3 | 2 | P1-3 | J23-3 |
| 4 | 1 | P1-23 | J23-23 |
| 4 | 2 | P1-4 | J23-4 |
| 5 | 1 | P1-24 | J23-24 |

1 Site dependent.
2 Used for testing only. Disconnected when not in use.
3 Supplied by vendor.
4 Adapters.
5 Wires tied back and insulated.
6 FAA RMS.
7 Power Monitor Filter 2A1FL1/5FL2 and/or 2A1FL2/105FL2 installed.
8 Used on redundant systems only.

Table 7-2. Running Wire List - Cont.

| Conductor No. | Conductor Aux. | FROM | TO |
|---|---|---|---|
| | | 4/104W409 | |
| | | UD4/104A13J8 (P1) | UD4/104J23 (P2) |
| 5 | 2 | P1-5 | J23-5 |
| 6 | 1 | P1-25 | J23-25 |
| 6 | 2 | P1-6 | J23-6 |
| 7 | 1 | P1-26 | J23-26 |
| 7 | 2 | P1-7 | J23-7 |
| 8 | 1 | P1-27 | J23-27 |
| 8 | 2 | P1-8 | J23-8 |
| SHLD | | SHLD B | E101 |
| 9 | 1 | P1-28 | J23-28 |
| 9 | 2 | P1-9 | J23-9 |
| SHLD | | SHLD B | E101 |
| 10 | 1 | P1-29 | J23-29 |
| 10 | 2 | P1-10 | J23-10 |
| SHLD | | SHLD B | E101 |
| 11 | 1 | P1-30 | J23-30 |
| 11 | 2 | P1-1 1 | J23-1 1 |
| 12 | 1 | P1-31 | J23-31 |
| 12 | 2 | P1-12 | J23-12 |
| 13 | 1 | P1-32 | J23-32 |
| 13 | 2 | P1-13 | J23-13 |
| 14 | 1 | P1-33 | J23-33 |
| 14 | 2 | P1-14 | J23-14 |
| 15 | 1 | P1-34 | J23-34 |
| 15 | 2 | P1-15 | J23-15 |
| 16 | 1 | P1-35 | J23-35 |
| 16 | 2 | P1-16 | J23-16 |
| 17 | 1[5] | | J23-36 |

1 Site dependent.
2 Used for testing only. Disconnected when not in use.
3 Supplied by vendor.
4 Adapters.
5 Wires tied back and insulated.
6 FAA RMS.
7 Power Monitor Filter 2A1FL1/5FL2 and/or 2A1FL2/105FL2 installed.
8 Used on redundant systems only.

Table 7-2. Running Wire List - Cont.

| Conductor No. | Conductor Aux. | FROM | TO |
|---|---|---|---|
| | | 4/104W409 | |
| | | UD4/104A13J8 (P1) | UD4/104J23 (P2) |
| 17 | 2[5] | | J23-17 |
| 18 | 1 | P1-37 | J23-37 |
| 18 | 2 | P1-18 | J23-18 |
| SHLD | | SHLD B | E101 |
| | | E101 | J23-GND |
| | | 4/104W410 | |
| | | UD4/104A13J10 (P1) | U4/104A8J5 (P2) |
| 1 | | P1-1 | P2-1 |
| 2 | | P1-2 | P2-2 |
| 3 | | P1-3 | P2-3 |
| 4 | | P1-6 | P2-6 |
| 5 | | P1-7 | P2-7 |
| 6 | | P1-8 | P2-8 |
| 7 | | P1-9 | P2-9 |
| 8 | | P1-4 | P2-4 |
| 9 | | P1-5 | P2-5 |
| 10[5] | | | |
| SHLD | | SHLD A | E101 |
| | | E101 | P1-GND |
| | | 4/104W411 | |
| | | UD4/104A32J9 (P1) | UD4/104J21 (P2) |
| 1 | 1 | P1-20 | J21-2 |
| 1 | 2 | P1-1 | J21-1 |
| | SHLD | SHLD B | J21-GND |
| 2 | 1 | P1-21 | J21-4 |
| 2 | 2 | P1-2 | J21-3 |

1 Site dependent.
2 Used for testing only. Disconnected when not in use.
3 Supplied by vendor.
4 Adapters.
5 Wires tied back and insulated.
6 FAA RMS.
7 Power Monitor Filter 2A1FL1/5FL2 and/or 2A1FL2/105FL2 installed.
8 Used on redundant systems only.

Table 7-2. Running Wire List - Cont.

| Conductor No. | Conductor Aux. | FROM | TO |
|---|---|---|---|
| | | 4/104W411 | |
| | | UD4/104A32J9 (P1) | UD4/104J21 (P2) |
| | SHLD | SHLD B | J21-GND |
| 3 | 1 | P1-22 | J21-6 |
| 3 | 2 | P1-3 | J21-5 |
| | SHLD | SHLD B | J21-GND |
| 4 | 1 | P1-23 | J21-8 |
| 4 | 2 | P1-4 | J21-7 |
| | SHLD | SHLD B | J21-GND |
| 5 | 1 | P1-24 | J21-10 |
| 5 | 2 | P1-5 | J21-9 |
| | SHLD | SHLD B | J21-GND |
| 6 | 1 | P1-25 | J21-12 |
| 6 | 2 | P1-6 | J21-1 1 |
| | SHLD | SHLD B | J21-GND |
| 7 | 1 | P1-26 | J21-14 |
| 7 | 2 | P1-7 | J21-13 |
| | SHLD | SHLD B | J21-GND |
| 8 | 1 | P1-27 | J21-16 |
| 8 | 2 | P1-8 | J21-15 |
| | SHLD | SHLD B | J21-GND |
| 9 | 1 | P1-28 | J21-18 |
| 9 | 2 | P1-9 | J21-17 |
| | SHLD | SHLD B | J21-GND |
| 10 | 1 | P1-30 | J21-21 |
| 10 | 2 | P1-1 1 | J21-20 |
| | SHLD | SHLD B | J21-GND |
| 11 | 1 | P1-31 | J21-23 |
| 11 | 2 | P1-12 | J21-22 |

1 Site dependent.
2 Used for testing only. Disconnected when not in use.
3 Supplied by vendor.
4 Adapters.
5 Wires tied back and insulated.
6 FAA RMS.
7 Power Monitor Filter 2A1FL1/5FL2 and/or 2A1FL2/105FL2 installed.
8 Used on redundant systems only.

Table 7-2. Running Wire List - Cont.

| Conductor No. | Conductor Aux. | FROM | TO |
|---|---|---|---|
| | | 4/104W411 | |
| | | UD4/104A32J9 (P1) | UD4/104J21 (P2) |
| | SHLD | SHLD B | J21-GND |
| 12 | 1 | P1-32 | J21-25 |
| 12 | 2 | P1-13 | J21-24 |
| | SHLD | SHLD B | J21-GND |
| 13 | 1 | P1-33 | J21-27 |
| 13 | 2 | P1-14 | J21-26 |
| | SHLD | SHLD B | J21-GND |
| 14 | 1 | P1-34 | J21-29 |
| 14 | 2 | P1-15 | J21-28 |
| | SHLD | SHLD B | J21-GND |
| 15 | 1 | P1-18 | J21-35 |
| 15 | 2 | P1-17 | J21-34 |
| | SHLD | SHLD B | J21-GND |
| 16 | 1 | P1-37 | J21-37 |
| 16 | 2 | P1-36 | J21-36 |
| | SHLD | SHLD B | J21-GND |
| 17 | 1 | P1-35 | J21-31 |
| 17 | 2 | P1-16 | J21-30 |
| | SHLD | SHLD B | J21-GND |
| 18 | 1 | P1-19 | J21-33 |
| 18 | 2 | P1-29 | J21-32 |
| | SHLD | SHLD B | J21-GND |
| 19 | 1[5] | | |
| 19 | 2[5] | | |
| | SHLD | SHLD B | J21-GND |

1 Site dependent.
2 Used for testing only. Disconnected when not in use.
3 Supplied by vendor.
4 Adapters.
5 Wires tied back and insulated.
6 FAA RMS.
7 Power Monitor Filter 2A1FL1/5FL2 and/or 2A1FL2/105FL2 installed.
8 Used on redundant systems only.

Table 7-2. Running Wire List - Cont.

| Conductor No. | Conductor Aux. | FROM | TO |
|---|---|---|---|
| | | 4/104W412 | |
| | | UD4/104A32J13 (P1) | UD4/104J22 (P2) |
| 1 | 1 | P1-1 | J22-1 |
| 1 | 2 | P1-20 | J22-2 |
| | SHLD | SHLD B | J22-GND |
| 2 | 1 | P1-2 | J22-3 |
| 2 | 2 | P1-21 | J22-4 |
| | SHLD | SHLD B | J22-GND |
| 3 | 1 | P1-3 | J22-5 |
| 3 | 2 | P1-22 | J22-6 |
| | SHLD | SHLD B | J22-GND |
| 4 | 1 | P1-4 | J22-7 |
| 4 | 2 | P1-23 | J22-8 |
| | SHLD | SHLD B | J22-GND |
| 5 | 1 | P1-5 | J22-9 |
| 5 | 2 | P1-24 | J22-10 |
| | SHLD | SHLD B | J22-GND |
| 6 | 1 | P1-6 | J22-11 |
| 6 | 2 | P1-25 | J22-12 |
| | SHLD | SHLD B | J22-GND |
| 7 | 1 | P1-7 | J22-13 |
| 7 | 2 | P1-26 | J22-14 |
| | SHLD | SHLD B | J22-GND |
| 8 | 1 | P1-8 | J22-15 |
| 8 | 2 | P1-27 | J22-16 |
| | SHLD | SHLD B | J22-GND |
| 9 | 1 | P1-9 | J22-17 |
| 9 | 2 | P1-28 | J22-18 |
| | SHLD | SHLD B | J22-GND |

[1] Site dependent.
[2] Used for testing only. Disconnected when not in use.
[3] Supplied by vendor.
[4] Adapters.
[5] Wires tied back and insulated.
[6] FAA RMS.
[7] Power Monitor Filter 2A1FL1/5FL2 and/or 2A1FL2/105FL2 installed.
[8] Used on redundant systems only.

Table 7-2. Running Wire List - Cont.

| Conductor No. | Conductor Aux. | FROM | TO |
|---|---|---|---|
| | | 4/104W412 | |
| | | UD4/104A32J13 (P1) | UD4/104J22 (P2) |
| 10 | 1 | P1-1 1 | J22-21 |
| 10 | 2 | P1-30 | J22-22 |
| | SHLD | SHLD B | J22-GND |
| 11 | 1 | P1-12 | J22-23 |
| 11 | 2 | P1-31 | J22-24 |
| | SHLD | SHLD B | J22-GND |
| 12 | 1 | P1-13 | J22-25 |
| 12 | 2 | P1-32 | J22-26 |
| | SHLD | SHLD B | J22-GND |
| 13 | 1 | P1-14 | J22-27 |
| 13 | 2 | P1-33 | J22-28 |
| | SHLD | SHLD B | J22-GND |
| 14 | 1 | P1-15 | J22-29 |
| 14 | 2 | P1-34 | J22-30 |
| | SHLD | SHLD B | J22-GND |
| 15 | 1 | P1-16 | J22-31 |
| 15 | 2 | P1-35 | J22-32 |
| | SHLD | SHLD B | J22-GND |
| 16 | 1[5] | | |
| 16 | 2[5] | | |
| | SHLD | | |
| 17 | 1[5] | | |
| 17 | 2[5] | | |
| | SHLD | | |
| 18 | 1[5] | | |
| 18 | 2[5] | | |
| | SHLD | | |

1 Site dependent.
2 Used for testing only. Disconnected when not in use.
3 Supplied by vendor.
4 Adapters.
5 Wires tied back and insulated.
6 FAA RMS.
7 Power Monitor Filter 2A1FL1/5FL2 and/or 2A1FL2/105FL2 installed.
8 Used on redundant systems only.

Table 7-2. Running Wire List - Cont.

| Conductor No. | Conductor Aux. | FROM | TO |
|---|---|---|---|
| | | 4/104W412 | |
| | | UD4/104A32J13 (P1) | UD4/104J22 (P2) |
| 19 | 1[5] | | |
| 19 | 2[5] | | |
| | SHLD | | |
| SHLD | | SHLD B | E101 |
| | | E101 | J22-19 |
| | | 4/104W413 | |
| | | UD4/104A26J2 (P1)<br>UD4/104A32J4 (P2) | UD4/104 |
| 1 | 1 | P2-3 | J2-2 |
| 1 | 2 | P2-2 | J2-21 |
| SHLD | A | E101 | |
| | B | | N/C |
| 2 | 1 | P2-5 | J2-1 |
| 2 | 2 | P2-4 | J2-20 |
| SHLD | A | E101 | |
| | B | | N/C |
| | | E101 | P2-GND |
| 3 | 1 | P2-1 | J2-4 |
| 3 | 2 | P2-8 | J2-22 |
| SHLD | A | E102 | |
| | B | | E103 |
| 4 | | E102 | P2-7 |
| 5 | | E103 | J2-24 |
| 6 | | J2-24 | J2-3 |
| 7 | | J2-3 | J2-19 |
| 8 | 1 | J7-22 | J2-26 |
| 8 | 2 | J7-1 | J2-7 |

1 Site dependent.
2 Used for testing only. Disconnected when not in use.
3 Supplied by vendor.
4 Adapters.
5 Wires tied back and insulated.
6 FAA RMS.
7 Power Monitor Filter 2A1FL1/5FL2 and/or 2A1FL2/105FL2 installed.
8 Used on redundant systems only.

Table 7-2. Running Wire List - Cont.

| Conductor No. | Conductor Aux. | FROM | TO |
|---|---|---|---|
| | | 4/104W413 | |
| | | UD4/104A26J2 (P1)<br>UD4/104A32J4 (P2) | UD4/104 |
| | SHLD | SHLD B | E104 |
| | | SHLD A | N/C |
| 9 | 1 | J7-2 | J2-8 |
| 9 | 2 | J7-23 | J2-27 |
| | SHLD | SHLD B | E104 |
| | | SHLD A | N/C |
| 10 | 1 | J7-3 | J2-9 |
| 10 | 2 | J7-24 | J2-28 |
| | SHLD | SHLD B | E104 |
| | | SHLD A | N/C |
| 11 | 1 | J7-16 | J2-10 |
| 11 | 2 | J7-37 | J2-29 |
| | SHLD | SHLD B | E104 |
| | | SHLD A | N/C |
| 12 | 1 | J7-17 | J2-11 |
| 12 | 2 | J7-38 | J2-30 |
| | SHLD | SHLD B | E104 |
| | | SHLD A | N/C |
| 13 | 1 | J7-18 | J2-12 |
| 13 | 2 | J7-39 | J2-31 |
| | SHLD | SHLD B | E104 |
| | | SHLD A | N/C |
| 14 | 1 | J7-19 | J2-13 |
| 14 | 2 | J7-40 | J2-32 |
| | SHLD | SHLD B | E104 |
| | | SHLD A | N/C |

1 Site dependent.
2 Used for testing only. Disconnected when not in use.
3 Supplied by vendor.
4 Adapters.
5 Wires tied back and insulated.
6 FAA RMS.
7 Power Monitor Filter 2A1FL1/5FL2 and/or 2A1FL2/105FL2 installed.
8 Used on redundant systems only.

Table 7-2. Running Wire List - Cont.

| Conductor No. | Conductor Aux. | FROM | TO |
|---|---|---|---|
| | | 4/104W413<br>UD4/104A26J2 (P1)<br>UD4/104A32J4 (P2) | UD4/104 |
| | | E104 | J2-GND |
| SHLD | A | J7-21 | |
| | B | | J2-19 |
| 15 | 1 | PS1(+OUT) | J2-5 |
| 15 | 2 | PS1(- OUT) | J2-23 |
| SHLD | A | N/C | |
| | B | | E105 |
| 16 | 1 | PS1(TB1-2) | J2-25 |
| 16 | 2 | PS1(TB1-1) | J2-6 |
| SHLD | A | N/C | |
| | B | | E105 |
| | | E105 | J2-GND |
| 17 | 1 | J7-4 | P1-A |
| 17 | 2 | J7-25 | P1-K |
| SHLD | A | N/C | |
| | B | | E106 |
| 18 | | P1-B | P1-M |
| 19 | 1 | J7-27 | P1-M |
| 19 | 2 | J7-6 | P1-E |
| SHLD | A | N/C | |
| | B | | E106 |
| 20 | | P1-E | P1-L |
| 21 | 1 | J7-26 | P1-D |
| 21 | 2 | J7-5 | P1-B |
| SHLD | A | N/C | |
| | B | | E106 |

1 Site dependent.
2 Used for testing only. Disconnected when not in use.
3 Supplied by vendor.
4 Adapters.
5 Wires tied back and insulated.
6 FAA RMS.
7 Power Monitor Filter 2A1FL1/5FL2 and/or 2A1FL2/105FL2 installed.
8 Used on redundant systems only.

Table 7-2. Running Wire List - Cont.

| Conductor No. | Conductor Aux. | FROM | TO |
|---|---|---|---|
| | | 4/104W413<br>UD4/104A26J2 (P1)<br>UD4/104A32J4 (P2) | UD4/104 |
| | | E106 | P1-GND |
| 22 | | P1-C | P1-H |
| 23 | 1 | J7-7 | J24-3 |
| 23 | 2 | J7-28 | J24-4 |
| SHLD | A | E107 | |
| | B | | N/C |
| 24 | 1 | J7-8 | J24-5 |
| 24 | 2 | J7-29 | J24-6 |
| SHLD | | SHLD A | E107 |
| 25 | | J7-1 1 | PS5(BITE OUT) |
| 26 | | J7-30 | PS2(BITE OUT) |
| 27 | 1 | J7-14 | J8-7 |
| 27 | 2 | J7-35 | J8-20 |
| SHLD | A | E107 | |
| | B | | N/C |
| 28 | 1 | J7-15 | J8-9 |
| 28 | 2 | J7-36 | J8-21 |
| SHLD | A | E107 | |
| | B | | N/C |
| 29 | | J7-31 | PS4(BITE OUT) |
| 30 | | J7-32 | PS6(BITE OUT) |
| 31 | | J7-12 | PS7(BITE OUT) |
| 32 | | J7-13 | PS9(BITE OUT) |
| 33 | 1 | J7-33 | PS8(BITE OUT) |
| 33 | 2 | J7-10 [5] | N/C |
| SHLD | A | E107 | |

1 Site dependent.
2 Used for testing only. Disconnected when not in use.
3 Supplied by vendor.
4 Adapters.
5 Wires tied back and insulated.
6 FAA RMS.
7 Power Monitor Filter 2A1FL1/5FL2 and/or 2A1FL2/105FL2 installed.
8 Used on redundant systems only.

Table 7-2. Running Wire List - Cont.

| Conductor No. | Conductor Aux. | FROM | TO |
|---|---|---|---|
| | | 4/104W413 | |
| | | UD4/104A26J2 (P1)<br>UD4/104A32J4 (P2) | UD4/104 |
| | B | | N/C |
| 34 | 1 | J8-6 | J24-17 |
| 34 | 2 | J8-19 | J24-18 |
| SHLD | A | N/C | |
| | B | | E108 |
| 35 | 1 | J8-5 | J24-15 |
| 35 | 2 | J8-18 | J24-16 |
| SHLD | A | N/C | |
| | B | | E108 |
| 36 | 1 | J8-4 | J24-13 |
| 36 | 2 | J8-17 | J24-14 |
| SHLD | A | N/C | |
| | B | | E108 |
| 37 | 1 | J8-3 | J24-1 1 |
| 37 | 2 | J8-16 | J24-12 |
| SHLD | A | N/C | |
| | B | | E108 |
| 38 | | J8-2 | J8-25 |
| 39 | | J8-25 | J13 |
| SHLD | A | E109 | |
| | B | | N/C |
| 40 | | E109 | J8-15 |
| 41 | 1 | J8-1 | J24-7 |
| 41 | 2 | J8-15 | J24-10 |
| SHLD | A | N/C | |
| | B | | E108 |

1 Site dependent.
2 Used for testing only. Disconnected when not in use.
3 Supplied by vendor.
4 Adapters.
5 Wires tied back and insulated.
6 FAA RMS.
7 Power Monitor Filter 2A1FL1/5FL2 and/or 2A1FL2/105FL2 installed.
8 Used on redundant systems only.

Table 7-2. Running Wire List - Cont.

| Conductor No. | Conductor Aux. | FROM | TO |
|---|---|---|---|
| | | 4/104W413<br>UD4/104A26J2 (P1)<br>UD4/104A32J4 (P2) | UD4/104 |
| 42 | | J8-1 | J8-24 |
| 43 | | J8-24 | J12 |
| SHLD | A | E110 | |
| | B | | N/C |
| 44 | | E110 | J8-GND |
| 45 | 1 | J8-2 | J24-9 |
| 45 | 2 | J8-14 | J24-8 |
| SHLD | A | N/C | |
| | B | | E108 |
| | | E108 | J24-GND |
| 46 | | J8-14 | J8-8 |
| 47 | 1 | J7-34 | PS1(BITE RTN) |
| 47 | 2 | J7-9 | PS1(BITE OUT) |
| SHLD | A | E107 | |
| | B | | N/C |
| | | E107 | J7-GND |
| 48 | | PS1(BITE RTN) | PS4(BITE RTN) |
| 49 | | PS4(BITE RTN) | PS5(BITE RTN) |
| 50 | | PS5(BITE RTN) | PS2(BITE RTN) |
| 51 | | PS2(BITE RTN) | PS6(BITE RTN) |
| 52 | | PS6(BITE RTN) | PS7(BITE RTN) |
| 53 | | PS7(BITE RTN) | PS8(BITE RTN) |
| 54 | | PS8(BITE RTN) | PS9(BITE RTN) |

1 Site dependent.
2 Used for testing only. Disconnected when not in use.
3 Supplied by vendor.
4 Adapters.
5 Wires tied back and insulated.
6 FAA RMS.
7 Power Monitor Filter 2A1FL1/5FL2 and/or 2A1FL2/105FL2 installed.
8 Used on redundant systems only.

Pages 7-199 through 7-222 deleted.

This page intentionally left blank.

Table 7-2. Running Wire List - Cont.

| Conductor No. | Conductor Aux. | FROM | TO |
|---|---|---|---|
| | | 4/104W424[8] | |
| | | UD4/104A32J10 (P1) | UD4/104A24J5 (P2)<br>UD4/104A25J2 (P3) |
| 1 | 1 | P1-5 | P2-8 |
| 1 | 2 | P1-4 | P2-9 |
| SHLD | A | E101 | |
| | B | | N/C |
| 1 | 1 | P1-3 | P3-7 |
| 1 | 2 | P1-2 | P3-8 |
| SHLD | A | E101 | |
| | B | | N/C |
| | | E101 | P1-GND |
| 1 | 1 | P2-2 | TB3H-3 |
| 1 | 2 | P2-1 | TB3H-G |
| 2 | 1 | P2-3 | TB3H-2 |
| 2 | 2 | P2-6 | TB3H-G |
| SHLD | A | E102 | P2-GND |
| | B | | N/C |
| 1 | 1 | P3-2 | TB3B-3 |
| 1 | 2 | P3-1 | TB3B-G |
| 2 | 1 | P3-5 | TB3B-5 |
| 2 | 2 | P3-9 | TB3B-G |
| 3 | 1 | P3-4 | TB3B-4 |
| 3 | 2[5] | N/C | N/C |
| SHLD | A | E103 | P3-GND |
| | B | | N/C |
| | | 4/104W500 | |
| | | UD4/104A8J4 (P1) | UD4/104TB2F (P2) |
| 1 | 1 | P1-1 | TB2F-3 |

1 Site dependent.
2 Used for testing only. Disconnected when not in use.
3 Supplied by vendor.
4 Adapters.
5 Wires tied back and insulated.
6 FAA RMS.
7 Power Monitor Filter 2A1FL1/5FL2 and/or 2A1FL2/105FL2 installed.
8 Used on redundant systems only.

Table 7-2. Running Wire List - Cont.

| Conductor No. | Conductor Aux. | FROM | TO |
|---|---|---|---|
| | | 4/104W500 | |
| | | UD4/104A8J4 (P1) | UD4/104TB2F (P2) |
| 1 | 2 | P1-3 | TB2F-G |
| 2 | 1 | P1-2 | TB2F-5 |
| 2 | 2 | P1-7 | TB2F-G |
| 3 | 1 | P1-4 | TB2F-4 |
| 3 | 2 | P1-8 | TB2F-G |
| 4 | 1 | P1-8 | TB2F-G |
| 4 | 2 | P1-5 | TB2F-1 |
| SHLD | | SHLD A | E101 |
| | | E101 | P1-GND |
| | | P1-6 | P1-2 |
| | | P1-9 | P1-4 |
| | | 4/104W501 | |
| | | UD4/104A9J5 (P1) | UD4/104TB2B (P2) |
| 1 | 1 | P1-4 | TB2B-4 |
| 1 | 2 | P1-3 | TB2B-G |
| SHLD | | SHLD A | E101 |
| | | E101 | P1-GND |
| | | P1-7 | P1-3 |
| | | P1-8 | P1-7 |
| | | P1-9 | P1-4 |
| | | 4/104W502 | |
| | | UD4/104A10J8 (P1) | UD4/104TB3C (P2) |
| 1 | 1 | P1-2 | TB3C-5 |
| 1 | 2 | P1-3 | TB3C-G |
| 2 | 1 | P1-4 | TB3C-4 |
| 2 | 2 | P1-7 | TB3C-G |

1 Site dependent.
2 Used for testing only. Disconnected when not in use.
3 Supplied by vendor.
4 Adapters.
5 Wires tied back and insulated.
6 FAA RMS.
7 Power Monitor Filter 2A1FL1/5FL2 and/or 2A1FL2/105FL2 installed.
8 Used on redundant systems only.

Table 7-2. Running Wire List - Cont.

| Conductor No. | Conductor Aux. | FROM | TO |
|---|---|---|---|
| | | 4/104W502 | |
| | | UD4/104A10J8 (P1) | UD4/104TB3C (P2) |
| SHLD | | SHLD A | E101 |
| | | E101 | P1-GND |
| | | P1-6 | P1-2 |
| | | P1-8 | P1-7 |
| | | P1-9 | P1-4 |
| | | 4/104W503 | |
| | | UD4/104A12J7 (P1) | UD4/104TB2A |
| 1 | 1 | P1-1 | TB2A-5 |
| 1 | 2 | P1-3 | TB2A-G |
| 2 | 1 | P1-5 | TB2A-4 |
| 2 | 2 | P1-7 | TB2A-G |
| SHLD | | SHLD A | E101 |
| | | E101 | P1-GND |
| | | P1-8 | P1-7 |
| | | 4/104W504 | |
| | | UD4/104A13J11 (P1) | UD4/104TB2J |
| 1 | 1 | P1-1 | TB2J-5 |
| 1 | 2 | P1-2 | TB2J-G |
| 2 | 1 | P1-3 | TB2J-4 |
| 2 | 2 | P1-4 | TB2J-G |
| 3 | 1 | P1-5 | TB2J-3 |
| 3 | 2 | P1-6 | TB2J-G |
| 4 | 1 | P1-7 | TB2J-2 |
| 4 | 2 | P1-8 | TB2J-G |
| SHLD | | SHLD A | E101 |
| | | E101 | P1-GND |

[1] Site dependent.
[2] Used for testing only. Disconnected when not in use.
[3] Supplied by vendor.
[4] Adapters.
[5] Wires tied back and insulated.
[6] FAA RMS.
[7] Power Monitor Filter 2A1FL1/5FL2 and/or 2A1FL2/105FL2 installed.
[8] Used on redundant systems only.

Table 7-2. Running Wire List - Cont.

| Conductor No. | Conductor Aux. | FROM | TO |
|---|---|---|---|
| | | 4/104W505[1] | |
| | | UD4/104A1J6 (P1) | UD4/104TB3A |
| 1 | 1 | P1-1 | TB3A-5 |
| 1 | 2 | P1-3 | TB3A-G |
| 2 | 1 | P1-2 | TB3A-1 |
| 2 | 2 | P1-7 | TB3A-G |
| 3 | 1 | P1-7 | TB3A-G |
| 3 | 2 | P1-4 | TB3A-2 |
| 4 | 1 | P1-5 | TB3A-4 |
| 4 | 2 | P1-8 | TB3A-G |
| 5 | 1 | P1-9 | TB3A-3 |
| 5 | 2 | P1-14 | TB3A-G |
| SHLD | | SHLD A | E101 |
| | | E101 | P1-GND |
| | | P1-6 | P1-4 |
| | | P1-10 | P1-1 |
| | | P1-1 1 | P1-9 |
| | | P1-12 | P1-2 |
| | | P1-13 | P1-6 |
| | | P1-15 | P1-5 |
| | | 4/104W506 | |
| | | UD4/104A5J8 (P1) | UD4/104TB3F |
| 1 | 1 | P1-2 | TB3F-5 |
| 1 | 2 | P1-3 | TB3F-G |
| 2 | 1 | P1-4 | TB3F-4 |
| 2 | 2 | P1-7 | TB3F-G |
| SHLD | | SHLD A | E101 |
| | | E101 | P1-GND |

1 Site dependent.
2 Used for testing only. Disconnected when not in use.
3 Supplied by vendor.
4 Adapters.
5 Wires tied back and insulated.
6 FAA RMS.
7 Power Monitor Filter 2A1FL1/5FL2 and/or 2A1FL2/105FL2 installed.
8 Used on redundant systems only.

Table 7-2. Running Wire List - Cont.

| Conductor No. | Conductor Aux. | FROM | TO |
|---|---|---|---|
| | | 4/104W506 | |
| | | UD4/104A5J8 (P1) | UD4/104TB3F |
| | | P1-6 | P1-2 |
| | | P1-8 | P1-7 |
| | | P1-9 | P1-4 |
| | | 4/104W507 | |
| | | UD4/104A23J5 (P1) | UD4/104TB3D |
| 1 | 1 | P1-2 | TB3D-3 |
| 1 | 2 | P1-1 | TB3D-G |
| 2 | 1 | P1-4 | TB3D-2 |
| 2 | 2 | P1-6 | TB3D-G |
| 3 | 1 | P1-8 | TB3D-1 |
| 3 | 2 | P1-6 | TB3D-G |
| 4 | 1[5] | | |
| 4 | 2[5] | | |
| SHLD | | SHLD A | E101 |
| | | E101 | P1-GND |
| | | P1-2 | P1-3 |
| | | P1-3 | P1-7 |
| | | P1-4 | P1-5 |
| | | P1-9 | P1-8 |
| | | 4/104W508 | |
| | | UD4/104A29J3 (P1) | UD4/104TB3B |
| 1 | 1 | P1-2 | TB3B-5 |
| 1 | 2 | P1-3 | TB3B-G |
| 2 | 1 | P1-4 | TB3B-4 |
| 2 | 2 | P1-7 | TB3B-G |
| SHLD | | SHLD A | E101 |

1 Site dependent.
2 Used for testing only. Disconnected when not in use.
3 Supplied by vendor.
4 Adapters.
5 Wires tied back and insulated.
6 FAA RMS.
7 Power Monitor Filter 2A1FL1/5FL2 and/or 2A1FL2/105FL2 installed.
8 Used on redundant systems only.

Table 7-2. Running Wire List - Cont.

| Conductor No. | Conductor Aux. | FROM | TO |
|---|---|---|---|
| | | 4/104W508 | |
| | | UD4/104A29J3 (P1) | UD4/104TB3B |
| | | E101 | P1-GND |
| | | P1-6 | P1-2 |
| | | P1-8 | P1-7 |
| | | P1-9 | P1-4 |
| | | 4/104W509[1] | |
| | | UD4/104A14J6 (P1) | UD4/104TB2C |
| 1 | 1 | P1-2 | TB2C-5 |
| 1 | 2 | P1-3 | TB2C-G |
| 2 | 1 | P1-4 | TB2C-4 |
| 2 | 2 | P1-7 | TB2C-G |
| SHLD | | SHLD A | E101 |
| | | E101 | P1-GND |
| | | P1-6 | P1-2 |
| | | P1-8 | P1-7 |
| | | P1-9 | P1-4 |
| | | 4/104W510[1] | |
| | | UD4/104A17J7 (P1) | UD4/104TB2D |
| 1 | 1 | P1-1 | TB2D-5 |
| 1 | 2 | P1-3 | TB2D-G |
| 2 | 1 | P1-5 | TB2D-4 |
| 2 | 2 | P1-7 | TB2D-G |
| SHLD | | SHLD A | E101 |
| | | E101 | P1-GND |
| | | P1-8 | P1-7 |

1 Site dependent.
2 Used for testing only. Disconnected when not in use.
3 Supplied by vendor.
4 Adapters.
5 Wires tied back and insulated.
6 FAA RMS.
7 Power Monitor Filter 2A1FL1/5FL2 and/or 2A1FL2/105FL2 installed.
8 Used on redundant systems only.

Table 7-2. Running Wire List - Cont.

| Conductor No. | Conductor Aux. | FROM | TO |
|---|---|---|---|
| | | 4/104W511[1] | |
| | | UD4/104A18J7 (P1) | UD4/104TB2C |
| 1 | 1 | P1-1 | TB2C-5 |
| 1 | 2 | P1-3 | TB2C-G |
| 2 | 1 | P1-5 | TB2C-4 |
| 2 | 2 | P1-7 | TB2C-G |
| SHLD | | SHLD A | E101 |
| | | E101 | P1-GND |
| | | P1-8 | P1-7 |
| | | 4/104W512[1] | |
| | | UD4/104A19J6 (P1) | UD4/104TB2B |
| 1 | 1 | P1-1 | TB2B-3 |
| 1 | 2 | P1-3 | TB2B-G |
| 2 | 1 | P1-2 | TB2B-5 |
| 2 | 2 | P1-7 | TB2B-G |
| 3 | 1 | P1-4 | TB2B-4 |
| 3 | 2 | P1-8 | TB2B-G |
| 4 | 1[5] | | |
| 4 | 2[5] | | |
| SHLD | A | P1-GND | |
| | B | | N/C |
| | | P1-5 | P1-1 |
| | | P1-6 | P1-2 |
| | | P1-9 | P1-4 |
| | | 4/104W513[1] | |
| | | UD4/104A30J3 (P1) | UD4/104TB2D |
| 1 | 1 | P1-1 | TB2D-5 |
| 1 | 2 | P1-3 | TB2D-G |

1 Site dependent.
2 Used for testing only. Disconnected when not in use.
3 Supplied by vendor.
4 Adapters.
5 Wires tied back and insulated.
6 FAA RMS.
7 Power Monitor Filter 2A1FL1/5FL2 and/or 2A1FL2/105FL2 installed.
8 Used on redundant systems only.

Table 7-2. Running Wire List - Cont.

| Conductor No. | Conductor Aux. | FROM | TO |
|---|---|---|---|
| | | 4/104W513[1] | |
| | | UD4/104A30J3 (P1) | UD4/104TB2D |
| 2 | 1 | P1-5 | TB2D-4 |
| 2 | 2 | P1-7 | TB2D-G |
| SHLD | | SHLD A | E101 |
| | | E101 | P1-GND |
| | | P1-8 | P1-3 |
| | | 4/104W514 | |
| | | UD4/104A31J3 (P1) | UD4/104TB2H |
| 1 | 1 | P1-1 | TB2H-5 |
| 1 | 2 | P1-3 | TB2H-G |
| 2 | 1 | P1-2 | TB2H-4 |
| 2 | 2 | P1-4 | TB2H-G |
| 3 | 1 | P1-5 | TB2H-2 |
| 3 | 2 | P1-6 | TB2H-G |
| 4 | 1 | P1-7 | TB2H-3 |
| 4 | 2 | P1-10 | TB2H-G |
| SHLD | | SHLD A | P1-GND |
| | | P1-7 | P1-8 |
| | | P1-8 | P1-9 |
| | | P1-5 | P1-1 1 |
| | | P1-1 1 | P1-12 |
| | | P1-13 | P1-10 |
| | | P1-14 | P1-2 |
| | | P1-15 | P1-1 |
| | | 4/104W515 | |
| | | UD4/104A32J3 (P1) | UD4/104TB2G |
| 1 | 1 | P1-1 | TB2G-3 |

1 Site dependent.
2 Used for testing only. Disconnected when not in use.
3 Supplied by vendor.
4 Adapters.
5 Wires tied back and insulated.
6 FAA RMS.
7 Power Monitor Filter 2A1FL1/5FL2 and/or 2A1FL2/105FL2 installed.
8 Used on redundant systems only.

Table 7-2. Running Wire List - Cont.

| Conductor No. | Conductor Aux. | FROM | TO |
|---|---|---|---|
| | | 4/104W515 | |
| | | UD4/104A32J3 (P1) | UD4/104TB2G |
| 1 | 2 | P1-3 | TB2G-G |
| 2 | 1 | P1-2 | TB2G-3 |
| 2 | 2 | P1-4 | TB2G-G |
| SHLD | | SHLD A | E101 |
| | | E101 | P1-GND |
| | | P1-5 | P1-2 |
| | | P1-6 | P1-5 |
| | | P1-7 | P1-4 |
| | | P1-8 | P1-7 |
| | | P1-9 | P1-8 |
| | | 4/104W516 | |
| | | UD4/104A11J4 (P1) | UD4/104PS2, PS7, PS8 |
| 1 | 1 | P1-1 | PS8(+OUT) |
| 1 | 2 | P1-2 | PS8(+RTN) |
| 2 | 1 | P1-3 | PS8(-OUT) |
| 2 | 2 | P1-4 | PS8(-RTN) |
| 3 | 1 | P1-5 | PS2(+OUT) |
| 3 | 2 | P1-6 | PS2(-OUT) |
| 4 | 1 | P1-9 | PS7(+OUT) |
| 4 | 2 | P1-8 | PS7(-OUT) |
| 5 | 1[5] | | |
| 5 | 2[5] | | |
| 6 | 1[5] | | |
| 6 | 2[5] | | |
| SHLD | | SHLD A | E101 |
| | | E101 | P1-GND |

1 Site dependent.
2 Used for testing only. Disconnected when not in use.
3 Supplied by vendor.
4 Adapters.
5 Wires tied back and insulated.
6 FAA RMS.
7 Power Monitor Filter 2A1FL1/5FL2 and/or 2A1FL2/105FL2 installed.
8 Used on redundant systems only.

Table 7-2. Running Wire List - Cont.

| Conductor No. | Conductor Aux. | FROM | | TO |
|---|---|---|---|---|
| | | | 4/104W518 | |
| | | UD4/104A32J6 (P1) | | UD4/104PS9 |
| 1 | 1 | P1-1 | | PS9(+ OUT) |
| 1 | 2 | P1-3 | | PS9(- OUT) |
| 2 | 1 | P1-5 | | PS9(+ OUT) |
| 2 | 2 | P1-7 | | PS9(- OUT) |
| SHLD | | SHLD A | | E101 |
| | | E101 | | P1-GND |
| | | | 4/104W519 | |
| | | UD4/104B1 (P1) | | UD4/104TB4 |
| | | | 4/104W520 | |
| | | UD4/104B2 (P1) | | UD4/104TB4 |
| | | | 4/104W706 | |
| | | UD4/104TB5-1, -4 | | UD4/104PS1TB1-2, -1, GND |
| | | | 4/104W707 | |
| | | UD4/104TB5-2, -5 | | UD4/104PS5TB1-2, -1, GND |
| | | | 4/104W708 | |
| | | UD4/104TB5-3, -6 | | UD4/104TB4-1, TB4-2 UD4/104B1-GND |
| | | | 4/104W709 | |
| | | UD4/104TB5-1, -4 | | UD4/104PS8TB1-2, -1, GND |
| | | | 4/104W710 | |
| | | UD4/104J26 (P1) | | UD4/104TB5 (P2) |
| 1 | | J26-A | | TB5-5 |
| 2 | | J26-D | | TB5-2 |
| 3 | | J26-E | | TB1 |

1 Site dependent.
2 Used for testing only. Disconnected when not in use.
3 Supplied by vendor.
4 Adapters.
5 Wires tied back and insulated.
6 FAA RMS.
7 Power Monitor Filter 2A1FL1/5FL2 and/or 2A1FL2/105FL2 installed.
8 Used on redundant systems only.

Table 7-2. Running Wire List - Cont.

| Conductor No. | Conductor Aux. | FROM | TO |
|---|---|---|---|
| | | 4/104W900 | |
| | | UD4/104J27 (P1) | UD4/104A37J1 (P2) |
| 1 | 1 | P1-17 | P2-17 |
| 1 | 2 | P1-14 | P2-14 |
| 1 | SHLD | P1-15 | P2-15 |
| 2 | 1 | P1-20 | P2-20 |
| 2 | 2 | P1-22 | P2-22 |
| 2 | SHLD | NC | NC |
| 3 | 1 | P1-23 | P2-23 |
| 3 | 2 | P1-7 | P2-7 |
| 3 | SHLD | P1-24 | P2-24 |
| 4 | 1 | NC | NC |
| 4 | 2 | P1-5 | P2-5 |
| 4 | SHLD | P1-6 | P2-6 |
| 5 | 1 | P1-2 | P2-2 |
| 5 | 2 | P1-4 | P2-4 |
| 5 | SHLD | P1-3 | P2-3 |
| 6 | 1 | P1-16 | P2-16 |
| 6 | 2 | P1-10 | P2-10 |
| 6 | SHLD | P1-21 | P2-21 |
| 7 | 1 | P1-13 | P2-13 |
| 7 | 2 | P1-11 | P2-11 |
| 7 | SHLD | P1-12 | P2-12 |
| 8 | 1 | P1-1 | P2-1 |
| 8 | 2 | P1-19 | P2-19 |
| 8 | SHLD | P1-18 | P2-18 |
| 9 | 1 | NC | NC |
| 9 | 2 | P1-8 | P2-8 |
| 9 | SHLD | P1-9 | P2-9 |

1 Site dependent.
2 Used for testing only. Disconnected when not in use.
3 Supplied by vendor.
4 Adapters.
5 Wires tied back and insulated.
6 FAA RMS.
7 Power Monitor Filter 2A1FL1/5FL2 and/or 2A1FL2/105FL2 installed.
8 Used on redundant systems only.

Table 7-2. Running Wire List - Cont.

| Conductor No. | Conductor Aux. | FROM | | TO |
|---|---|---|---|---|
| | | UD5/105A1J3 (P1) | 5/105A1W2 (FAA RMS) | UD5/105A1TB1 |
| 1 | | P1-9 | | 5A1TB1-1 |
| 2 | | P1-2 | | 5A1TB1-3 |
| 3 | | P1-12 | | 5A1TB1-4 |
| 4 | | P1-1 | | 5A1TB1-5 |
| | | UD5/105A1J3 | 5/105A37W1 (FAA RMS) | UD5/105A37TB1 |
| 1 | 1 | NC | | NC |
| 1 | 2 | NC | | NC |
| 1 | SHLD | NC | | NC |
| 2 | 1 | NC | | NC |
| 2 | 2 | P1-12 | | TB1-5 |
| 2 | SHLD | P1-10 | | E9 |
| 3 | 1 | P1-2 | | TB1-8 |
| 3 | 2 | P1-14 | | NC |
| 3 | SHLD | P1-5 | | E8 |
| 4 | 1 | NC | | NC |
| 4 | 2 | P1-1 | | TB1-1 |
| 4 | SHLD | P1-6 | | E4 |
| 5 | 1 | NC | | NC |
| 5 | 2 | P1-9 | | TB1-4 |
| 5 | SHLD | P1-8 | | E10 |
| 6 | 1 | NC | | NC |
| 6 | 2 | NC | | NC |
| 6 | SHLD | NC | | NC |

[1] Site dependent.
[2] Used for testing only. Disconnected when not in use.
[3] Supplied by vendor.
[4] Adapters.
[5] Wires tied back and insulated.
[6] FAA RMS.
[7] Power Monitor Filter 2A1FL1/5FL2 and/or 2A1FL2/105FL2 installed.
[8] Used on redundant systems only.

Table 7-2. Running Wire List - Cont.

| Conductor No. | Conductor Aux. | FROM | TO |
|---|---|---|---|
| | | 5/105W600 | |
| | | UD5/105A25J1 | UD5/105J4 (P2) |
| 1 | | P1-B | J4-B |
| 2 | | P1-C | J4-C |
| 3 | | P1-D | J4-D |
| 4 | | P1-E | J4-E |
| 5 | | P1-F | J4-F |
| 6 | | P1-G | J4-G |
| SHLD | | SHLD A | E101 |
| | | SHLD B | E102 |
| 7 | | P1-L | E101 |
| 8 | | E101 | P1-GND |
| 9 | | J4-L | E102 |
| 10 | | E102 | J4-GND |
| | | 5/105W601 | |
| | | UD5/105A6J2 (P1) | UD5/105J3 (P2) |
| 1 | 1 | P1-M | J3-M |
| 1 | 2 | P1-t | J3-t |
| | SHLD | E101 | E102 |
| 2 | 1 | P1-y | J3-y |
| 2 | 2 | P1-T | J3-T |
| | SHLD | E101 | E102 |
| 3 | 1 | P1-K | J3-K |
| 3 | 2 | P1-L | J3-L |
| | SHLD | P1-E | J3-E |
| 4 | 1 | P1-Z | J3-Z |
| 4 | 2 | P1-a | J3-a |
| | SHLD | P1-S | J3-S |

1 Site dependent.
2 Used for testing only. Disconnected when not in use.
3 Supplied by vendor.
4 Adapters.
5 Wires tied back and insulated.
6 FAA RMS.
7 Power Monitor Filter 2A1FL1/5FL2 and/or 2A1FL2/105FL2 installed.
8 Used on redundant systems only.

Table 7-2. Running Wire List - Cont.

| Conductor No. | Conductor Aux. | FROM | TO |
|---|---|---|---|
| | | 5/105W601 | |
| | | UD5/105A6J2 (P1) | UD5/105J3 (P2) |
| 5 | 1 | P1-f | J3-f |
| 5 | 2 | P1-g | J3-g |
| | SHLD | P1-Y | J3-Y |
| 6 | 1 | P1-u | J3-u |
| 6 | 2 | P1-v | J3-v |
| | SHLD | P1-p | J3-p |
| 7 | 1 | P1-V | J3-V |
| 7 | 2 | P1-W | J3-W |
| | SHLD | P1-O | J3-O |
| 8 | 1 | P1-P | J3-P |
| 8 | 2 | P1-Q | J3-Q |
| | SHLD | P1-J | J3-J |
| 9 | 1 | P1-q | J3-q |
| 9 | 2 | P1-r | J3-r |
| | SHLD | P1-h | J3-h |
| 10 | 1 | P1-X | J3-X |
| 10 | 2 | P1-w | J3-w |
| | SHLD | E101 | E102 |
| 11 | 1 | P1-m | J3-m |
| 11 | 2 | P1-n | J3-n |
| | SHLD | P1-e | J3-e |
| 12 | 1 | P1-H | J3-H |
| 12 | 2 | P1-R | J3-R |
| | SHLD | E101 | E102 |
| 13 | 1 | P1-C | J3-C |
| 13 | 2 | P1-D | J3-D |
| | SHLD | E101 | E102 |

[1] Site dependent.
[2] Used for testing only. Disconnected when not in use.
[3] Supplied by vendor.
[4] Adapters.
[5] Wires tied back and insulated.
[6] FAA RMS.
[7] Power Monitor Filter 2A1FL1/5FL2 and/or 2A1FL2/105FL2 installed.
[8] Used on redundant systems only.

Table 7-2. Running Wire List - Cont.

| Conductor No. | Conductor Aux. | FROM | TO |
|---|---|---|---|
| | | 5/105W601 | |
| | | UD5/105A6J2 (P1) | UD5/105J3 (P2) |
| 14 | 1 | P1-A | J3-A |
| 14 | 2 | P1-B | J3-B |
| | SHLD | E101 | E102 |
| 15 | 1 | P1-F | J3-F |
| 15 | 2 | P1-G | J3-G |
| | SHLD | E101 | E102 |
| 16 | 1 | P1-N | J3-N |
| 16 | 2 | P1-U | J3-U |
| | SHLD | E101 | E102 |
| 17 | 1 | P1-c | J3-c |
| 17 | 2 | P1-b | J3-b |
| | SHLD | E101 | E102 |
| 18 | 1 | P1-j | J3-j |
| 18 | 2 | P1-k | J3-k |
| | SHLD | E101 | E102 |
| 19 | 1 | P1-x | J3-x |
| 19 | 2 | P1-s | J3-s |
| | SHLD | E101 | E102 |
| 20 | 1 | | |
| 20 | 2 | | |
| | SHLD | | |
| 21 | 1 | | |
| 21 | 2 | | |
| | SHLD | | |
| SHLD | SHLD A | E103 | P1-GND |
| | SHLD B | E104 | J3-GND |
| | | E101 | P1-d |

1 Site dependent.
2 Used for testing only. Disconnected when not in use.
3 Supplied by vendor.
4 Adapters.
5 Wires tied back and insulated.
6 FAA RMS.
7 Power Monitor Filter 2A1FL1/5FL2 and/or 2A1FL2/105FL2 installed.
8 Used on redundant systems only.

Table 7-2. Running Wire List - Cont.

| Conductor No. | Conductor Aux. | FROM | TO |
|---|---|---|---|
| | | 5/105W601 | |
| | | UD5/105A6J2 (P1) | UD5/105J3 (P2) |
| | | E102 | J3-d |
| | | 5/105W602 | |
| | | UD5/105A3J4 (P1) | UD5/105J9 (P2) |
| 1 | 1 | P1-1 | J9-1 |
| 1 | 2 | P1-20 | J9-20 |
| 2 | 1 | P1-2 | J9-2 |
| 2 | 2 | P1-21 | J9-21 |
| 3 | 1 | P1-3 | J9-3 |
| 3 | 2 | P1-22 | J9-22 |
| 4 | 1 | P1-4 | J9-4 |
| 4 | 2 | P1-23 | J9-23 |
| 5 | 1 | P1-5 | J9-5 |
| 5 | 2 | P1-24 | J9-24 |
| 6 | 1 | P1-6 | J9-6 |
| 6 | 2 | P1-25 | J9-25 |
| 7 | 1 | P1-7 | J9-7 |
| 7 | 2 | P1-26 | J9-26 |
| 8 | 1 | P1-8 | J9-8 |
| 8 | 2 | P1-27 | J9-27 |
| 9 | 1 | P1-9 | J9-9 |
| 9 | 2 | P1-28 | J9-28 |
| 10 | 1 | P1-10 | J9-10 |
| 10 | 2 | P1-29 | J9-29 |
| 11 | 1 | P1-11 | J9-11 |
| 11 | 2 | P1-30 | J9-30 |
| 12 | 1 | P1-12 | J9-12 |
| 12 | 2 | P1-31 | J9-31 |

[1] Site dependent.
[2] Used for testing only. Disconnected when not in use.
[3] Supplied by vendor.
[4] Adapters.
[5] Wires tied back and insulated.
[6] FAA RMS.
[7] Power Monitor Filter 2A1FL1/5FL2 and/or 2A1FL2/105FL2 installed.
[8] Used on redundant systems only.

Table 7-2. Running Wire List - Cont.

| Conductor No. | Conductor Aux. | FROM | TO |
|---|---|---|---|
| | | 5/105W602 | |
| | | UD5/105A3J4 (P1) | UD5/105J9 (P2) |
| 13 | 1 | P1-13 | J9-13 |
| 13 | 2 | P1-32 | J9-32 |
| 14 | 1 | P1-14 | J9-14 |
| 14 | 2 | P1-33 | J9-33 |
| 15 | 1 | P1-15 | J9-15 |
| 15 | 2 | P1-34 | J9-34 |
| SHLD | | P1-GND | J9-GND |
| | | 5/105W602[7] | |
| | | UD5/105FL2J1 (P1) | UD5/105J9 (P2) |
| 1 | 1 | P1-1 | J9-1 |
| 1 | 2 | P1-20 | J9-20 |
| 2 | 1 | P1-2 | J9-2 |
| 2 | 2 | P1-21 | J9-21 |
| 3 | 1 | P1-3 | J9-3 |
| 3 | 2 | P1-22 | J9-22 |
| 4 | 1 | P1-4 | J9-4 |
| 4 | 2 | P1-23 | J9-23 |
| 5 | 1 | P1-5 | J9-5 |
| 5 | 2 | P1-24 | J9-24 |
| 6 | 1 | P1-6 | J9-6 |
| 6 | 2 | P1-25 | J9-25 |
| 7 | 1 | P1-7 | J9-7 |
| 7 | 2 | P1-26 | J9-26 |
| 8 | 1 | P1-8 | J9-8 |
| 8 | 2 | P1-27 | J9-27 |
| 9 | 1 | P1-9 | J9-9 |
| 9 | 2 | P1-28 | J9-28 |

1 Site dependent.
2 Used for testing only. Disconnected when not in use.
3 Supplied by vendor.
4 Adapters.
5 Wires tied back and insulated.
6 FAA RMS.
7 Power Monitor Filter 2A1FL1/5FL2 and/or 2A1FL2/105FL2 installed.
8 Used on redundant systems only.

Table 7-2. Running Wire List - Cont.

| Conductor No. | Conductor Aux. | FROM | TO |
|---|---|---|---|
| | | 5/105W602[7] | |
| | | UD5/105FL2J1 (P1) | UD5/105J9 (P2) |
| 10 | 1 | P1-10 | J9-10 |
| 10 | 2 | P1-29 | J9-29 |
| 11 | 1 | P1-11 | J9-11 |
| 11 | 2 | P1-30 | J9-30 |
| 12 | 1 | P1-12 | J9-12 |
| 12 | 2 | P1-31 | J9-31 |
| 13 | 1 | P1-13 | J9-13 |
| 13 | 2 | P1-32 | J9-32 |
| 14 | 1 | P1-14 | J9-14 |
| 14 | 2 | P1-33 | J9-33 |
| 15 | 1 | P1-15 | J9-15 |
| 15 | 2 | P1-34 | J9-34 |
| SHLD | | P1-GND | J9-GND |
| | | 5/105W604 | |
| | | UD5/105A3J9 (P1) | UD5/105J10 (P2) |
| 1 | 1 | P1-1 | J10-1 |
| 1 | 2 | P1-9 | J10-9 |
| 2 | 1 | P1-2 | J10-2 |
| 2 | 2 | P1-10 | J10-10 |
| 3 | 1 | P1-11 | J10-11 |
| 3 | 2 | P1-4 | J10-4 |
| 4 | 1 | P1-12 | J10-12 |
| 4 | 2 | P1-5 | J10-5 |
| 5 | 1 | P1-13 | J10-13 |
| 5 | 2 | P1-6 | J10-6 |
| 6 | 1 | | |
| 6 | 2 | | |

1 Site dependent.
2 Used for testing only. Disconnected when not in use.
3 Supplied by vendor.
4 Adapters.
5 Wires tied back and insulated.
6 FAA RMS.
7 Power Monitor Filter 2A1FL1/5FL2 and/or 2A1FL2/105FL2 installed.
8 Used on redundant systems only.

Table 7-2. Running Wire List - Cont.

| Conductor No. | Conductor Aux. | FROM | TO |
|---|---|---|---|
| | | 5/105W604 | |
| | | UD5/105A3J9 (P1) | UD5/105J10 (P2) |
| SHLD | | P1-GND | J10-GND |
| | | 5/105W605 | |
| | | UD5/105A3J3 (P1) | UD5/105J7 (P2) |
| 1 | | P1-1 | J7-1 |
| 2 | | P1-2 | J7-2 |
| 3 | | P1-3 | J7-3 |
| 4 | | P1-4 | J7-4 |
| 5 | | P1-5 | J7-5 |
| 6 | | P1-6 | J7-6 |
| 7 | | P1-7 | J7-7 |
| 8 | | P1-8 | J7-8 |
| 9 | | P1-9 | J7-9 |
| 10 | | P1-10 | J7-10 |
| 11 | | P1-11 | J7-11 |
| 12 | | P1-12 | J7-12 |
| 13 | | P1-13 | J7-13 |
| 14 | | P1-14 | J7-14 |
| 15 | | P1-15 | J7-15 |
| 16 | | P1-16 | J7-16 |
| SHLD | | P1-GND | J7-GND |
| | | 5/105W606 | |
| | | UD5/105A3J2 (P1) | UD5/105J8 (P2) |
| 1 | 1 | P1-2 | J8-2 |
| 1 | 2 | P1-20 | J8-20 |
| 2 | 1 | P1-3 | J8-3 |
| 2 | 2 | P1-21 | J8-21 |

1 Site dependent.
2 Used for testing only. Disconnected when not in use.
3 Supplied by vendor.
4 Adapters.
5 Wires tied back and insulated.
6 FAA RMS.
7 Power Monitor Filter 2A1FL1/5FL2 and/or 2A1FL2/105FL2 installed.
8 Used on redundant systems only.

Table 7-2. Running Wire List - Cont.

| Conductor No. | Conductor Aux. | FROM | TO |
|---|---|---|---|
| | | 5/105W606 | |
| | | UD5/105A3J2 (P1) | UD5/105J8 (P2) |
| 3 | 1 | P1-4 | J8-4 |
| 3 | 2 | P1-22 | J8-22 |
| 4 | 1 | P1-5 | J8-5 |
| 4 | 2 | P1-23 | J8-23 |
| 5 | 1 | P1-6 | J8-6 |
| 5 | 2 | P1-24 | J8-24 |
| 6 | 1 | P1-7 | J8-7 |
| 6 | 2 | P1-25 | J8-25 |
| 7 | 1 | P1-8 | J8-8 |
| 7 | 2 | P1-26 | J8-26 |
| 8 | 1 | P1-9 | J8-9 |
| 8 | 2 | P1-27 | J8-27 |
| 9 | 1 | P1-10 | J8-10 |
| 9 | 2 | P1-28 | J8-28 |
| 10 | 1 | P1-11 | J8-11 |
| 10 | 2 | P1-29 | J8-29 |
| 11 | 1 | P1-12 | J8-12 |
| 11 | 2 | P1-30 | J8-30 |
| 12 | 1 | P1-13 | J8-13 |
| 12 | 2 | P1-31 | J8-31 |
| 13 | 1 | P1-14 | J8-14 |
| 13 | 2 | P1-32 | J8-32 |
| 14 | 1 | P1-15 | J8-15 |
| 14 | 2 | P1-33 | J8-33 |
| 15 | 1 | P1-16 | J8-16 |
| 15 | 2 | P1-34 | J8-34 |
| 16 | 1 | P1-17 | J8-17 |

[1] Site dependent.
[2] Used for testing only. Disconnected when not in use.
[3] Supplied by vendor.
[4] Adapters.
[5] Wires tied back and insulated.
[6] FAA RMS.
[7] Power Monitor Filter 2A1FL1/5FL2 and/or 2A1FL2/105FL2 installed.
[8] Used on redundant systems only.

Table 7-2. Running Wire List - Cont.

| Conductor No. | Conductor Aux. | FROM | TO |
|---|---|---|---|
| | | 5/105W606 | |
| | | UD5/105A3J2 (P1) | UD5/105J8 (P2) |
| 16 | 2 | P1-35 | J8-35 |
| 17 | 1 | P1-18 | J8-18 |
| 17 | 2 | P1-36 | J8-36 |
| 18 | 1 | P1-19 | J8-19 |
| 18 | 2 | P1-37 | J8-37 |
| 19 | 1 | | |
| 19 | 2 | | |
| SHLD | | P1-GND | J8-GND |
| | | 5/105W610 | |
| | | UD5/105A10J18 (P1) | UD5/105J20 (P2) |
| 1 | 1 | P1-1 | J20-1 |
| 1 | 2 | P1-2 | J20-20 |
| 2 | 1 | P1-3 | J20-2 |
| 2 | 2 | P1-4 | J20-21 |
| 3 | 1 | P1-5 | J20-3 |
| 3 | 2 | P1-6 | J20-22 |
| 4 | 1 | P1-7 | J20-4 |
| 4 | 2 | P1-8 | J20-23 |
| 5 | 1 | P1-9 | J20-5 |
| 5 | 2 | P1-10 | J20-24 |
| 6 | 1 | P1-1 1 | J20-6 |
| 6 | 2 | P1-12 | J20-25 |
| 7 | 1 | P1-13 | J20-7 |
| 7 | 2 | P1-14 | J20-26 |
| 8 | 1 | P1-15 | J20-8 |
| 8 | 2 | P1-16 | J20-27 |
| 9 | 1 | P1-17 | J20-9 |

1 Site dependent.
2 Used for testing only. Disconnected when not in use.
3 Supplied by vendor.
4 Adapters.
5 Wires tied back and insulated.
6 FAA RMS.
7 Power Monitor Filter 2A1FL1/5FL2 and/or 2A1FL2/105FL2 installed.
8 Used on redundant systems only.

Table 7-2. Running Wire List - Cont.

| Conductor No. | Conductor Aux. | FROM | TO |
|---|---|---|---|
| | | 5/105W610 | |
| | | UD5/105A10J18 (P1) | UD5/105J20 (P2) |
| 9 | 2 | P1-18 | J20-28 |
| 10 | 1 | P1-19 | J20-10 |
| 10 | 2 | P1-20 | J20-29 |
| 11 | 1 | P1-21 | J20-11 |
| 11 | 2 | P1-22 | J20-30 |
| 12 | 1 | P1-23 | J20-12 |
| 12 | 2 | P1-24 | J20-31 |
| 13 | 1 | P1-25 | J20-13 |
| 13 | 2 | P1-26 | J20-32 |
| 14 | 1 | P1-27 | J20-14 |
| 14 | 2 | P1-28 | J20-33 |
| 15 | 1 | P1-29 | J20-15 |
| 15 | 2 | P1-30 | J20-34 |
| 16 | 1 | P1-31 | J20-16 |
| 16 | 2 | P1-32 | J20-35 |
| 17 | 1 | P1-33 | J20-17 |
| 17 | 2 | P1-34 | J20-36 |
| 18 | 1 | P1-35 | J20-18 |
| 18 | 2 | P1-36 | J20-37 |
| SHLD | | | |
| | | 5/105W611 | |
| | | UD5/105A10J17 (P1) | UD5/105J19 (P2) |
| 1 | 1 | P1-1 | J19-1 |
| 1 | 2 | P1-2 | J19-20 |
| 2 | 1 | P1-3 | J19-2 |
| 2 | 2 | P1-4 | J19-21 |
| 3 | 1 | P1-5 | J19-3 |

[1] Site dependent.
[2] Used for testing only. Disconnected when not in use.
[3] Supplied by vendor.
[4] Adapters.
[5] Wires tied back and insulated.
[6] FAA RMS.
[7] Power Monitor Filter 2A1FL1/5FL2 and/or 2A1FL2/105FL2 installed.
[8] Used on redundant systems only.

Table 7-2. Running Wire List - Cont.

| Conductor No. | Conductor Aux. | FROM | TO |
|---|---|---|---|
| | | 5/105W611 | |
| | | UD5/105A10J17 (P1) | UD5/105J19 (P2) |
| 3 | 2 | P1-6 | J19-22 |
| 4 | 1 | P1-7 | J19-4 |
| 4 | 2 | P1-8 | J19-23 |
| 5 | 1 | P1-9 | J19-5 |
| 5 | 2 | P1-10 | J19-24 |
| 6 | 1 | P1-11 | J19-6 |
| 6 | 2 | P1-12 | J19-25 |
| 7 | 1 | P1-13 | J19-7 |
| 7 | 2 | P1-14 | J19-26 |
| 8 | 1 | P1-15 | J19-8 |
| 8 | 2 | P1-16 | J19-27 |
| 9 | 1 | P1-17 | J19-9 |
| 9 | 2 | P1-18 | J19-28 |
| 10 | 1 | P1-19 | J19-10 |
| 10 | 2 | P1-20 | J19-29 |
| 11 | 1 | P1-21 | J19-11 |
| 11 | 2 | P1-22 | J19-30 |
| 12 | 1 | P1-23 | J19-12 |
| 12 | 2 | P1-24 | J19-31 |
| 13 | 1 | P1-25 | J19-13 |
| 13 | 2 | P1-26 | J19-32 |
| 14 | 1 | P1-27 | J19-14 |
| 14 | 2 | P1-28 | J19-33 |
| 15 | 1 | P1-29 | J19-15 |
| 15 | 2 | P1-30 | J19-34 |
| 16 | 1 | P1-31 | J19-16 |
| 16 | 2 | P1-32 | J19-35 |

1 Site dependent.
2 Used for testing only. Disconnected when not in use.
3 Supplied by vendor.
4 Adapters.
5 Wires tied back and insulated.
6 FAA RMS.
7 Power Monitor Filter 2A1FL1/5FL2 and/or 2A1FL2/105FL2 installed.
8 Used on redundant systems only.

Table 7-2. Running Wire List - Cont.

| Conductor No. | Conductor Aux. | FROM | TO |
|---|---|---|---|
| | | 5/105W611 | |
| | | UD5/105A10J17 (P1) | UD5/105J19 (P2) |
| 17 | 1 | P1-33 | J19-17 |
| 17 | 2 | P1-34 | J19-36 |
| 18 | 1 | P1-35 | J19-18 |
| 18 | 2 | P1-36 | J19-37 |
| SHLD | | | J19-GND |
| | | 5/105W612 | |
| | | UD5/105A10J16 (P1) | UD5/105J21 (P2) |
| 1 | 1 | P1-1 | J21-1 |
| 1 | 2 | P1-2 | J21-20 |
| 2 | 1 | P1-3 | J21-2 |
| 2 | 2 | P1-4 | J21-21 |
| 3 | 1 | P1-5 | J21-3 |
| 3 | 2 | P1-6 | J21-22 |
| 4 | 1 | P1-7 | J21-4 |
| 4 | 2 | P1-8 | J21-23 |
| 5 | 1 | P1-9 | J21-5 |
| 5 | 2 | P1-10 | J21-24 |
| 6 | 1 | P1-1 1 | J21-6 |
| 6 | 2 | P1-12 | J21-25 |
| 7 | 1 | P1-13 | J21-7 |
| 7 | 2 | P1-14 | J21-26 |
| 8 | 1 | P1-15 | J21-8 |
| 8 | 2 | P1-16 | J21-27 |
| 9 | 1 | P1-17 | J21-9 |
| 9 | 2 | P1-18 | J21-28 |
| 10 | 1 | P1-19 | J21-10 |
| 10 | 2 | P1-20 | J21-29 |

1 Site dependent.
2 Used for testing only. Disconnected when not in use.
3 Supplied by vendor.
4 Adapters.
5 Wires tied back and insulated.
6 FAA RMS.
7 Power Monitor Filter 2A1FL1/5FL2 and/or 2A1FL2/105FL2 installed.
8 Used on redundant systems only.

Table 7-2. Running Wire List - Cont.

| Conductor No. | Conductor Aux. | FROM | TO |
|---|---|---|---|
| | | 5/105W612 | |
| | | UD5/105A10J16 (P1) | UD5/105J21 (P2) |
| 11 | 1 | P1-21 | J21-11 |
| 11 | 2 | P1-22 | J21-30 |
| 12 | 1 | P1-23 | J21-12 |
| 12 | 2 | P1-24 | J21-31 |
| 13 | 1 | P1-25 | J21-13 |
| 13 | 2 | P1-26 | J21-32 |
| 14 | 1 | P1-27 | J21-14 |
| 14 | 2 | P1-28 | J21-33 |
| 15 | 1 | P1-29 | J21-15 |
| 15 | 2 | P1-30 | J21-34 |
| 16 | 1 | P1-31 | J21-16 |
| 16 | 2 | P1-32 | J21-35 |
| 17 | 1 | P1-33 | J21-17 |
| 17 | 2 | P1-34 | J21-36 |
| 18 | 1 | P1-35 | J21-18 |
| 18 | 2 | P1-36 | J21-37 |
| 19 | 1 | | |
| 19 | 2 | | |
| SHLD | | | J21-GND |
| | | 5/105W613 | |
| | | UD5/105A10J15 (P1) | UD5/105J18 (P2) |
| 1 | 1 | P1-1 | J18-1 |
| 1 | 2 | P1-2 | J18-20 |
| 2 | 1 | P1-3 | J18-2 |
| 2 | 2 | P1-4 | J18-21 |
| 3 | 1 | P1-5 | J18-3 |
| 3 | 2 | P1-6 | J18-22 |

1 Site dependent.
2 Used for testing only. Disconnected when not in use.
3 Supplied by vendor.
4 Adapters.
5 Wires tied back and insulated.
6 FAA RMS.
7 Power Monitor Filter 2A1FL1/5FL2 and/or 2A1FL2/105FL2 installed.
8 Used on redundant systems only.

Table 7-2. Running Wire List - Cont.

| Conductor No. | Conductor Aux. | FROM | TO |
|---|---|---|---|
| | | 5/105W613 | |
| | | UD5/105A10J15 (P1) | UD5/105J18 (P2) |
| 4 | 1 | P1-7 | J18-4 |
| 4 | 2 | P1-8 | J18-23 |
| 5 | 1 | P1-9 | J18-5 |
| 5 | 2 | P1-10 | J18-24 |
| 6 | 1 | P1-11 | J18-6 |
| 6 | 2 | P1-12 | J18-25 |
| 7 | 1 | P1-13 | J18-7 |
| 7 | 2 | P1-14 | J18-26 |
| 8 | 1 | P1-15 | J18-8 |
| 8 | 2 | P1-16 | J18-27 |
| 9 | 1 | P1-17 | J18-9 |
| 9 | 2 | P1-18 | J18-28 |
| 10 | 1 | P1-19 | J18-10 |
| 10 | 2 | P1-20 | J18-29 |
| 11 | 1 | P1-21 | J18-11 |
| 11 | 2 | P1-22 | J18-30 |
| 12 | 1 | P1-23 | J18-12 |
| 12 | 2 | P1-24 | J18-31 |
| 13 | 1 | P1-25 | J18-13 |
| 13 | 2 | P1-26 | J18-32 |
| 14 | 1 | P1-27 | J18-14 |
| 14 | 2 | P1-28 | J18-33 |
| 15 | 1 | P1-29 | J18-15 |
| 15 | 2 | P1-30 | J18-34 |
| 16 | 1 | P1-31 | J18-16 |
| 16 | 2 | P1-32 | J18-35 |
| 17 | 1 | P1-33 | J18-17 |

1 Site dependent.
2 Used for testing only. Disconnected when not in use.
3 Supplied by vendor.
4 Adapters.
5 Wires tied back and insulated.
6 FAA RMS.
7 Power Monitor Filter 2A1FL1/5FL2 and/or 2A1FL2/105FL2 installed.
8 Used on redundant systems only.

Table 7-2. Running Wire List - Cont.

| Conductor No. | Conductor Aux. | FROM | TO |
|---|---|---|---|
| | | 5/105W613 | |
| | | UD5/105A10J15 (P1) | UD5/105J18 (P2) |
| 17 | 2 | P1-34 | J18-36 |
| 18 | 1 | P1-35 | J18-18 |
| 18 | 2 | P1-36 | J18-37 |
| SHLD | | | J18-GND |
| | | 5/105W614[1] | |
| | | UD5/105A9J25 (P1) | UD5/105A12A14J3 (P2) |
| 1 | 1 | P1-1 | P2-1 |
| 1 | 2 | P1-2 | P2-2 |
| 2 | 1 | P1-3 | P2-3 |
| 2 | 2 | P1-4 | P2-4 |
| 3 | 1 | P1-5 | P2-5 |
| 3 | 2 | P1-6 | P2-6 |
| 4 | 1 | P1-7 | P2-7 |
| 4 | 2 | P1-8 | P2-8 |
| 5 | 1 | P1-9 | P2-9 |
| 5 | 2 | P1-10 | P2-10 |
| 6 | 1 | P1-11 | P2-11 |
| 6 | 2 | P1-12 | P2-12 |
| 7 | 1 | P1-13 | P2-13 |
| 7 | 2 | P1-14 | P2-14 |
| 8 | 1 | P1-15 | P2-15 |
| 8 | 2 | P1-16 | P2-16 |
| 9 | 1 | P1-17 | P2-17 |
| 9 | 2 | P1-18 | P2-18 |
| 10 | 1 | P1-19 | P2-19 |
| 10 | 2 | P1-20 | P2-20 |
| 11 | 1 | P1-21 | P2-21 |

1 Site dependent.
2 Used for testing only. Disconnected when not in use.
3 Supplied by vendor.
4 Adapters.
5 Wires tied back and insulated.
6 FAA RMS.
7 Power Monitor Filter 2A1FL1/5FL2 and/or 2A1FL2/105FL2 installed.
8 Used on redundant systems only.

Table 7-2. Running Wire List - Cont.

| Conductor No. | Conductor Aux. | FROM | TO |
|---|---|---|---|
| | | 5/105W614[1] | |
| | | UD5/105A9J25 (P1) | UD5/105A12A14J3 (P2) |
| 11 | 2 | P1-22 | P2-22 |
| 12 | 1 | P1-23 | P2-23 |
| 12 | 2 | P1-24 | P2-24 |
| 13 | 1 | P1-25 | P2-25 |
| 13 | 2 | P1-26 | P2-26 |
| 14 | 1 | P1-27 | P2-27 |
| 14 | 2 | P1-28 | P2-28 |
| 15 | 1 | P1-29 | P2-29 |
| 15 | 2 | P1-30 | P2-30 |
| 16 | 1 | P1-31 | P2-31 |
| 16 | 2 | P1-32 | P2-32 |
| 17 | 1 | P1-33 | P2-33 |
| 17 | 2 | P1-34 | P2-34 |
| 18 | 1 | P1-35 | P2-35 |
| 18 | 2 | P1-36 | P2-36 |
| 19 | 1 | P1-37 | P2-37 |
| 19 | 2 | P1-38 | P2-38 |
| 20 | 1 | P1-39 | P2-39 |
| 20 | 2 | P1-40 | P2-40 |
| 21 | 1 | P1-41 | P2-41 |
| 21 | 2 | P1-42 | P2-42 |
| 22 | 1 | P1-43 | P2-43 |
| 22 | 2 | P1-44 | P2-44 |
| 23 | 1 | P1-45 | P2-45 |
| 23 | 2 | P1-46 | P2-46 |
| 24 | 1 | P1-47 | P2-47 |
| 24 | 2 | P1-48 | P2-48 |

1 Site dependent.
2 Used for testing only. Disconnected when not in use.
3 Supplied by vendor.
4 Adapters.
5 Wires tied back and insulated.
6 FAA RMS.
7 Power Monitor Filter 2A1FL1/5FL2 and/or 2A1FL2/105FL2 installed.
8 Used on redundant systems only.

Table 7-2. Running Wire List - Cont.

| Conductor No. | Conductor Aux. | FROM | TO |
|---|---|---|---|
| | | 5/105W614[1] | |
| | | UD5/105A9J25 (P1) | UD5/105A12A14J3 (P2) |
| 25 | 1 | P1-49 | P2-49 |
| 25 | 2 | P1-50 | P2-50 |
| SHLD | | | |
| | | 5/105W614[1] | |
| | | UD5/105A9J25 (P1) | UD5/105A13A3J3 (P2) |
| 1 | 1 | P1-1 | P2-1 |
| 1 | 2 | P1-2 | P2-2 |
| 2 | 1 | P1-3 | P2-3 |
| 2 | 2 | P1-4 | P2-4 |
| 3 | 1 | P1-5 | P2-5 |
| 3 | 2 | P1-6 | P2-6 |
| 4 | 1 | P1-7 | P2-7 |
| 4 | 2 | P1-8 | P2-8 |
| 5 | 1 | P1-9 | P2-9 |
| 5 | 2 | P1-10 | P2-10 |
| 6 | 1 | P1-11 | P2-11 |
| 6 | 2 | P1-12 | P2-12 |
| 7 | 1 | P1-13 | P2-13 |
| 7 | 2 | P1-14 | P2-14 |
| 8 | 1 | P1-15 | P2-15 |
| 8 | 2 | P1-16 | P2-16 |
| 9 | 1 | P1-17 | P2-17 |
| 9 | 2 | P1-18 | P2-18 |
| 10 | 1 | P1-19 | P2-19 |
| 10 | 2 | P1-20 | P2-20 |
| 11 | 1 | P1-21 | P2-21 |
| 11 | 2 | P1-22 | P2-22 |

1 Site dependent.
2 Used for testing only. Disconnected when not in use.
3 Supplied by vendor.
4 Adapters.
5 Wires tied back and insulated.
6 FAA RMS.
7 Power Monitor Filter 2A1FL1/5FL2 and/or 2A1FL2/105FL2 installed.
8 Used on redundant systems only.

Table 7-2. Running Wire List - Cont.

| Conductor No. | Conductor Aux. | FROM | TO |
|---|---|---|---|
| | | 5/105W614[1] | |
| | | UD5/105A9J25 (P1) | UD5/105A13A3J3 (P2) |
| 12 | 1 | P1-23 | P2-23 |
| 12 | 2 | P1-24 | P2-24 |
| 13 | 1 | P1-25 | P2-25 |
| 13 | 2 | P1-26 | P2-26 |
| 14 | 1 | P1-27 | P2-27 |
| 14 | 2 | P1-28 | P2-28 |
| 15 | 1 | P1-29 | P2-29 |
| 15 | 2 | P1-30 | P2-30 |
| 16 | 1 | P1-31 | P2-31 |
| 16 | 2 | P1-32 | P2-32 |
| 17 | 1 | P1-33 | P2-33 |
| 17 | 2 | P1-34 | P2-34 |
| 18 | 1 | P1-35 | P2-35 |
| 18 | 2 | P1-36 | P2-36 |
| 19 | 1 | P1-37 | P2-37 |
| 19 | 2 | P1-38 | P2-38 |
| 20 | 1 | P1-39 | P2-39 |
| 20 | 2 | P1-40 | P2-40 |
| 21 | 1 | P1-41 | P2-41 |
| 21 | 2 | P1-42 | P2-42 |
| 22 | 1 | P1-43 | P2-43 |
| 22 | 2 | P1-44 | P2-44 |
| 23 | 1 | P1-45 | P2-45 |
| 23 | 2 | P1-46 | P2-46 |
| 24 | 1 | P1-47 | P2-47 |
| 24 | 2 | P1-48 | P2-48 |
| 25 | 1 | P1-49 | P2-49 |

1 Site dependent.
2 Used for testing only. Disconnected when not in use.
3 Supplied by vendor.
4 Adapters.
5 Wires tied back and insulated.
6 FAA RMS.
7 Power Monitor Filter 2A1FL1/5FL2 and/or 2A1FL2/105FL2 installed.
8 Used on redundant systems only.

Table 7-2. Running Wire List - Cont.

| Conductor No. | Conductor Aux. | FROM | TO |
|---|---|---|---|
| | | 5/105W614[1] | |
| | | UD5/105A9J25 (P1) | UD5/105A13A3J3 (P2) |
| 25 SHLD | 2 | P1-50 | P2-50 |
| | | 5/105W615[1] | |
| | | UD5/105A9J24 (P1) | UD5/105A12A14J2 (P2) |
| 1 | 1 | P1-15 | P2-15 |
| 1 | 2 | P1-16 | P2-16 |
| 2 | 1 | P1-17 | P2-17 |
| 2 | 2 | P1-18 | P2-18 |
| 3 | 1 | P1-19 | P2-19 |
| 3 | 2 | P1-20 | P2-20 |
| 4 | 1 | P1-21 | P2-21 |
| 4 | 2 | P1-22 | P2-22 |
| 5 | 1 | P1-23 | P2-23 |
| 5 | 2 | P1-24 | P2-24 |
| 6 | 1 | P1-25 | P2-25 |
| 6 | 2 | P1-26 | P2-26 |
| 7 | 1 | P1-27 | P2-27 |
| 7 | 2 | P1-28 | P2-28 |
| 8 | 1 | P1-29 | P2-29 |
| 8 | 2 | P1-30 | P2-30 |
| 9 | 1 | P1-31 | P2-31 |
| 9 | 2 | P1-32 | P2-32 |
| 10 | 1 | P1-33 | P2-33 |
| 10 | 2 | P1-34 | P2-34 |
| 11 | 1 | P1-35 | P2-35 |
| 11 | 2 | P1-36 | P2-36 |
| 12 | 1 | P1-37 | P2-37 |

1 Site dependent.
2 Used for testing only. Disconnected when not in use.
3 Supplied by vendor.
4 Adapters.
5 Wires tied back and insulated.
6 FAA RMS.
7 Power Monitor Filter 2A1FL1/5FL2 and/or 2A1FL2/105FL2 installed.
8 Used on redundant systems only.

Table 7-2. Running Wire List - Cont.

| Conductor No. | Conductor Aux. | FROM | TO |
|---|---|---|---|
| | | 5/105W615[1] | |
| | | UD5/105A9J24 (P1) | UD5/105A12A14J2 (P2) |
| 12 | 2 | P1-38 | P2-38 |
| 13 | 1 | P1-39 | P2-39 |
| 13 | 2 | P1-40 | P2-40 |
| 14 | 1 | P1-41 | P2-41 |
| 14 | 2 | P1-42 | P2-42 |
| 15 | 1 | P1-43 | P2-43 |
| 15 | 2 | P1-44 | P2-44 |
| 16 | 1 | P1-45 | P2-45 |
| 16 | 2 | P1-46 | P2-46 |
| 17 | 1 | P1-47 | P2-47 |
| 17 | 2 | P1-48 | P2-48 |
| 18 | 1 | P1-49 | P2-49 |
| 18 | 2 | P1-50 | P2-50 |
| SHLD | | | |
| | | 5/105W615[1] | |
| | | UD5/105A9J24 (P1) | UD5/105A13A3J2 (P2) |
| 1 | 1 | P1-15 | P2-15 |
| 1 | 2 | P1-16 | P2-16 |
| 2 | 1 | P1-17 | P2-17 |
| 2 | 2 | P1-18 | P2-18 |
| 3 | 1 | P1-19 | P2-19 |
| 3 | 2 | P1-20 | P2-20 |
| 4 | 1 | P1-21 | P2-21 |
| 4 | 2 | P1-22 | P2-22 |
| 5 | 1 | P1-23 | P2-23 |
| 5 | 2 | P1-24 | P2-24 |
| 6 | 1 | P1-25 | P2-25 |

1 Site dependent.
2 Used for testing only. Disconnected when not in use.
3 Supplied by vendor.
4 Adapters.
5 Wires tied back and insulated.
6 FAA RMS.
7 Power Monitor Filter 2A1FL1/5FL2 and/or 2A1FL2/105FL2 installed.
8 Used on redundant systems only.

Table 7-2. Running Wire List - Cont.

| Conductor No. | Conductor Aux. | FROM | TO |
|---|---|---|---|
| | | 5/105W615[1] | |
| | | UD5/105A9J24 (P1) | UD5/105A13A3J2 (P2) |
| 6 | 2 | P1-26 | P2-26 |
| 7 | 1 | P1-27 | P2-27 |
| 7 | 2 | P1-28 | P2-28 |
| 8 | 1 | P1-29 | P2-29 |
| 8 | 2 | P1-30 | P2-30 |
| 9 | 1 | P1-31 | P2-31 |
| 9 | 2 | P1-32 | P2-32 |
| 10 | 1 | P1-33 | P2-33 |
| 10 | 2 | P1-34 | P2-34 |
| 11 | 1 | P1-35 | P2-35 |
| 11 | 2 | P1-36 | P2-36 |
| 12 | 1 | P1-37 | P2-37 |
| 12 | 2 | P1-38 | P2-38 |
| 13 | 1 | P1-39 | P2-39 |
| 13 | 2 | P1-40 | P2-40 |
| 14 | 1 | P1-41 | P2-41 |
| 14 | 2 | P1-42 | P2-42 |
| 15 | 1 | P1-43 | P2-43 |
| 15 | 2 | P1-44 | P2-44 |
| 16 | 1 | P1-45 | P2-45 |
| 16 | 2 | P1-46 | P2-46 |
| 17 | 1 | P1-47 | P2-47 |
| 17 | 2 | P1-48 | P2-48 |
| 18 | 1 | P1-49 | P2-49 |
| 18 | 2 | P1-50 | P2-50 |
| SHLD | | | |

1 Site dependent.
2 Used for testing only. Disconnected when not in use.
3 Supplied by vendor.
4 Adapters.
5 Wires tied back and insulated.
6 FAA RMS.
7 Power Monitor Filter 2A1FL1/5FL2 and/or 2A1FL2/105FL2 installed.
8 Used on redundant systems only.

Table 7-2. Running Wire List - Cont.

| Conductor No. | Conductor Aux. | FROM | TO |
|---|---|---|---|
| | | 5/105W616[1] | |
| | | UD5/105A9J26 (P1) | UD5/105A12A14J4 (P2) |
| 1 | | P1-1 | P2-1 |
| 2 | | P1-2 | P2-2 |
| 3 | | P1-3 | P2-3 |
| 4 | | P1-4 | P2-4 |
| 5 | | P1-5 | P2-5 |
| 6 | | P1-6 | P2-6 |
| 7 | | P1-7 | P2-7 |
| 8 | | P1-8 | P2-8 |
| 9 | | P1-9 | P2-9 |
| 10 | | P1-10 | P2-10 |
| 11 | | P1-1 1 | P2-1 1 |
| 12 | | P1-12 | P2-12 |
| 13 | | P1-13 | P2-13 |
| 14 | | P1-14 | P2-14 |
| 15 | | P1-15 | P2-15 |
| 16 | | P1-16 | P2-16 |
| 17 | | P1-17 | P2-17 |
| 18 | | P1-18 | P2-18 |
| 19 | | P1-19 | P2-19 |
| 20 | | P1-20 | P2-20 |
| 21 | | P1-21 | P2-21 |
| 22 | | P1-22 | P2-22 |
| 23 | | P1-23 | P2-23 |
| 24 | | P1-24 | P2-24 |
| 25 | | P1-25 | P2-25 |
| 26 | | P1-26 | P2-26 |
| 27 | | P1-27 | P2-27 |

1 Site dependent.
2 Used for testing only. Disconnected when not in use.
3 Supplied by vendor.
4 Adapters.
5 Wires tied back and insulated.
6 FAA RMS.
7 Power Monitor Filter 2A1FL1/5FL2 and/or 2A1FL2/105FL2 installed.
8 Used on redundant systems only.

Table 7-2. Running Wire List - Cont.

| Conductor No. | Conductor Aux. | FROM | TO |
|---|---|---|---|
| | | 5/105W616[1] | |
| | | UD5/105A9J26 (P1) | UD5/105A12A14J4 (P2) |
| 28 | | P1-28 | P2-28 |
| 29 | | P1-29 | P2-29 |
| 30 | | P1-30 | P2-30 |
| 31 | | P1-31 | P2-31 |
| 32 | | P1-32 | P2-32 |
| 33 | | P1-33 | P2-33 |
| 34 | | P1-34 | P2-34 |
| 35 | | P1-35 | P2-35 |
| 36 | | P1-36 | P2-36 |
| 37 | | P1-37 | P2-37 |
| 38 | | P1-38 | P2-38 |
| 39 | | P1-39 | P2-39 |
| 40 | | P1-40 | P2-40 |
| 41 | | P1-41 | P2-41 |
| 42 | | P1-42 | P2-42 |
| 43 | | P1-43 | P2-43 |
| 44 | | P1-44 | P2-44 |
| 45 | | P1-45 | P2-45 |
| 46 | | P1-46 | P2-46 |
| 47 | | P1-47 | P2-47 |
| 48 | | P1-48 | P2-48 |
| 49 | | P1-49 | P2-49 |
| 50 | | P1-50 | P2-50 |
| | | 5/105W616[1] | |
| | | UD5A13A3J4 (P2) | UD5A9J26 (P1) |
| 1 | | P2-1 | P1-1 |
| 2 | | P2-2 | P1-2 |

1 Site dependent.
2 Used for testing only. Disconnected when not in use.
3 Supplied by vendor.
4 Adapters.
5 Wires tied back and insulated.
6 FAA RMS.
7 Power Monitor Filter 2A1FL1/5FL2 and/or 2A1FL2/105FL2 installed.
8 Used on redundant systems only.

Table 7-2. Running Wire List - Cont.

| Conductor No. | Conductor Aux. | FROM | TO |
|---|---|---|---|
| | | 5/105W616[1] | |
| | | UD5A13A3J4 (P2) | UD5A9J26 (P1) |
| 3 | | P2-3 | P1-3 |
| 4 | | P2-4 | P1-4 |
| 5 | | P2-5 | P1-5 |
| 6 | | P2-6 | P1-6 |
| 7 | | P2-7 | P1-7 |
| 8 | | P2-8 | P1-8 |
| 9 | | P2-9 | P1-9 |
| 10 | | P2-10 | P1-10 |
| 11 | | P2-1 1 | P1-1 1 |
| 12 | | P2-12 | P1-12 |
| 13 | | P2-13 | P1-13 |
| 14 | | P2-14 | P1-14 |
| 15 | | P2-15 | P1-15 |
| 16 | | P2-16 | P1-16 |
| 17 | | P2-17 | P1-17 |
| 18 | | P2-18 | P1-18 |
| 19 | | P2-19 | P1-19 |
| 20 | | P2-20 | P1-20 |
| 21 | | P2-21 | P1-21 |
| 22 | | P2-22 | P1-22 |
| 23 | | P2-23 | P1-23 |
| 24 | | P2-24 | P1-24 |
| 25 | | P2-25 | P1-25 |
| 26 | | P2-26 | P1-26 |
| 27 | | P2-27 | P1-27 |
| 28 | | P2-28 | P1-28 |
| 29 | | P2-29 | P1-29 |

1 Site dependent.
2 Used for testing only. Disconnected when not in use.
3 Supplied by vendor.
4 Adapters.
5 Wires tied back and insulated.
6 FAA RMS.
7 Power Monitor Filter 2A1FL1/5FL2 and/or 2A1FL2/105FL2 installed.
8 Used on redundant systems only.

Table 7-2. Running Wire List - Cont.

| Conductor No. | Conductor Aux. | FROM | TO |
|---|---|---|---|
| | | 5/105W616[1] | |
| | | UD5A13A3J4 (P2) | UD5A9J26 (P1) |
| 30 | | P2-30 | P1-30 |
| 31 | | P2-31 | P1-31 |
| 32 | | P2-32 | P1-32 |
| 33 | | P2-33 | P1-33 |
| 34 | | P2-34 | P1-34 |
| 35 | | P2-35 | P1-35 |
| 36 | | P2-36 | P1-36 |
| 37 | | P2-37 | P1-37 |
| 38 | | P2-38 | P1-38 |
| 39 | | P2-39 | P1-39 |
| 40 | | P2-40 | P1-40 |
| 41 | | P2-41 | P1-41 |
| 42 | | P2-42 | P1-42 |
| 43 | | P2-43 | P1-43 |
| 44 | | P2-44 | P1-44 |
| 45 | | P2-45 | P1-45 |
| 46 | | P2-46 | P1-46 |
| 47 | | P2-47 | P1-47 |
| 48 | | P2-48 | P1-48 |
| 49 | | P2-49 | P1-49 |
| 50 | | P2-50 | P1-50 |
| | | 5/105W617 | |
| | | UD5/105A9J30 (P1) | UD5/105A10J12 (P2) |
| 1 | | P1-1 | P2-1 |
| 2 | | P1-2 | P2-2 |
| 3 | | P1-3 | P2-3 |
| 4 | | P1-4 | P2-4 |

1 Site dependent.
2 Used for testing only. Disconnected when not in use.
3 Supplied by vendor.
4 Adapters.
5 Wires tied back and insulated.
6 FAA RMS.
7 Power Monitor Filter 2A1FL1/5FL2 and/or 2A1FL2/105FL2 installed.
8 Used on redundant systems only.

Table 7-2. Running Wire List - Cont.

| Conductor No. | Conductor Aux. | FROM | TO |
|---|---|---|---|
| | | 5/105W617 | |
| | | UD5/105A9J30 (P1) | UD5/105A10J12 (P2) |
| 5 | | P1-5 | P2-5 |
| 6 | | P1-6 | P2-6 |
| 7 | | P1-7 | P2-7 |
| 8 | | P1-8 | P2-8 |
| 9 | | P1-9 | P2-9 |
| 10 | | P1-10 | P2-10 |
| 11 | | P1-11 | P2-11 |
| 12 | | P1-12 | P2-12 |
| 13 | | P1-13 | P2-13 |
| 14 | | P1-14 | P2-14 |
| 15 | | P1-15 | P2-15 |
| 16 | | P1-16 | P2-16 |
| 17 | | P1-17 | P2-17 |
| 18 | | P1-18 | P2-18 |
| 19 | | P1-19 | P2-19 |
| 20 | | P1-20 | P2-20 |
| 21 | | P1-21 | P2-21 |
| 22 | | P1-22 | P2-22 |
| 23 | | P1-23 | P2-23 |
| 24 | | P1-24 | P2-24 |
| 25 | | P1-25 | P2-25 |
| 26 | | P1-26 | P2-26 |
| 27 | | P1-27 | P2-27 |
| 28 | | P1-28 | P2-28 |
| 29 | | P1-29 | P2-29 |
| 30 | | P1-30 | P2-30 |
| 31 | | P1-31 | P2-31 |

[1] Site dependent.
[2] Used for testing only. Disconnected when not in use.
[3] Supplied by vendor.
[4] Adapters.
[5] Wires tied back and insulated.
[6] FAA RMS.
[7] Power Monitor Filter 2A1FL1/5FL2 and/or 2A1FL2/105FL2 installed.
[8] Used on redundant systems only.

Table 7-2. Running Wire List - Cont.

| Conductor No. | Conductor Aux. | FROM | TO |
|---|---|---|---|
| | | 5/105W617 | |
| | | UD5/105A9J30 (P1) | UD5/105A10J12 (P2) |
| 32 | | P1-32 | P2-32 |
| 33 | | P1-33 | P2-33 |
| 34 | | P1-34 | P2-34 |
| 35 | | P1-35 | P2-35 |
| 36 | | P1-36 | P2-36 |
| 37 | | P1-37 | P2-37 |
| 38 | | P1-38 | P2-38 |
| 39 | | P1-39 | P2-39 |
| 40 | | P1-40 | P2-40 |
| 41 | | P1-41 | P2-41 |
| 42 | | P1-42 | P2-42 |
| 43 | | P1-43 | P2-43 |
| 44 | | P1-44 | P2-44 |
| 45 | | P1-45 | P2-45 |
| 46 | | P1-46 | P2-46 |
| 47 | | P1-47 | P2-47 |
| 48 | | P1-48 | P2-48 |
| 49 | | P1-49 | P2-49 |
| 50 | | P1-50 | P2-50 |
| | | 5/105W618 | |
| | | UD5/105A9J31 (P1) | UD5/105A10J13 (P2) |
| 1 | | P1-1 | P2-1 |
| 2 | | P1-2 | P2-2 |
| 3 | | P1-3 | P2-3 |
| 4 | | P1-4 | P2-4 |
| 5 | | P1-5 | P2-5 |
| 6 | | P1-6 | P2-6 |

1 Site dependent.
2 Used for testing only. Disconnected when not in use.
3 Supplied by vendor.
4 Adapters.
5 Wires tied back and insulated.
6 FAA RMS.
7 Power Monitor Filter 2A1FL1/5FL2 and/or 2A1FL2/105FL2 installed.
8 Used on redundant systems only.

Table 7-2. Running Wire List - Cont.

| Conductor No. | Conductor Aux. | FROM | TO |
|---|---|---|---|
| | | 5/105W618 | |
| | | UD5/105A9J31 (P1) | UD5/105A10J13 (P2) |
| 7 | | P1-7 | P2-7 |
| 8 | | P1-8 | P2-8 |
| 9 | | P1-9 | P2-9 |
| 10 | | P1-10 | P2-10 |
| 11 | | P1-11 | P2-11 |
| 12 | | P1-12 | P2-12 |
| 13 | | P1-13 | P2-13 |
| 14 | | P1-14 | P2-14 |
| 15 | | P1-15 | P2-15 |
| 16 | | P1-16 | P2-16 |
| 17 | | P1-17 | P2-17 |
| 18 | | P1-18 | P2-18 |
| 19 | | P1-19 | P2-19 |
| 20 | | P1-20 | P2-20 |
| 21 | | P1-21 | P2-21 |
| 22 | | P1-22 | P2-22 |
| 23 | | P1-23 | P2-23 |
| 24 | | P1-24 | P2-24 |
| 25 | | P1-25 | P2-25 |
| 26 | | P1-26 | P2-26 |
| 27 | | P1-27 | P2-27 |
| 28 | | P1-28 | P2-28 |
| 29 | | P1-29 | P2-29 |
| 30 | | P1-30 | P2-30 |
| 31 | | P1-31 | P2-31 |
| 32 | | P1-32 | P2-32 |
| 33 | | P1-33 | P2-33 |

[1] Site dependent.
[2] Used for testing only. Disconnected when not in use.
[3] Supplied by vendor.
[4] Adapters.
[5] Wires tied back and insulated.
[6] FAA RMS.
[7] Power Monitor Filter 2A1FL1/5FL2 and/or 2A1FL2/105FL2 installed.
[8] Used on redundant systems only.

Table 7-2. Running Wire List - Cont.

| Conductor No. | Conductor Aux. | FROM | TO |
|---|---|---|---|
| | | 5/105W618 | |
| | | UD5/105A9J31 (P1) | UD5/105A10J13 (P2) |
| 34 | | P1-34 | P2-34 |
| 35 | | P1-35 | P2-35 |
| 36 | | P1-36 | P2-36 |
| 37 | | P1-37 | P2-37 |
| 38 | | P1-38 | P2-38 |
| 39 | | P1-39 | P2-39 |
| 40 | | P1-40 | P2-40 |
| 41 | | P1-41 | P2-41 |
| 42 | | P1-42 | P2-42 |
| 43 | | P1-43 | P2-43 |
| 44 | | P1-44 | P2-44 |
| 45 | | P1-45 | P2-45 |
| 46 | | P1-46 | P2-46 |
| 47 | | P1-47 | P2-47 |
| 48 | | P1-48 | P2-48 |
| 49 | | P1-49 | P2-49 |
| 50 | | P1-50 | P2-50 |
| | | 5/105W619 | |
| | | UD5/105A9J32 (P1) | UD5/105A10J14 (P2) |
| 1 | | P1-1 | P2-1 |
| 2 | | P1-2 | P2-2 |
| 3 | | P1-3 | P2-3 |
| 4 | | P1-4 | P2-4 |
| 5 | | P1-5 | P2-5 |
| 6 | | P1-6 | P2-6 |
| 7 | | P1-7 | P2-7 |
| 8 | | P1-8 | P2-8 |

1 Site dependent.
2 Used for testing only. Disconnected when not in use.
3 Supplied by vendor.
4 Adapters.
5 Wires tied back and insulated.
6 FAA RMS.
7 Power Monitor Filter 2A1FL1/5FL2 and/or 2A1FL2/105FL2 installed.
8 Used on redundant systems only.

Table 7-2. Running Wire List - Cont.

| Conductor No. | Conductor Aux. | FROM | TO |
|---|---|---|---|
| | | 5/105W619 | |
| | | UD5/105A9J32 (P1) | UD5/105A10J14 (P2) |
| 9 | | P1-9 | P2-9 |
| 10 | | P1-10 | P2-10 |
| 11 | | P1-11 | P2-11 |
| 12 | | P1-12 | P2-12 |
| 13 | | P1-13 | P2-13 |
| 14 | | P1-14 | P2-14 |
| 15 | | P1-15 | P2-15 |
| 16 | | P1-16 | P2-16 |
| 17 | | P1-17 | P2-17 |
| 18 | | P1-18 | P2-18 |
| 19 | | P1-19 | P2-19 |
| 20 | | P1-20 (No Connection) | P2-20 (No Connection) |
| 21 | | P1-21 | P2-21 |
| 22 | | P1-22 | P2-22 |
| 23 | | P1-23 | P2-23 |
| 24 | | P1-24 | P2-24 |
| 25 | | P1-25 | P2-25 |
| 26 | | P1-26 | P2-26 |
| 27 | | P1-27 | P2-27 |
| 28 | | P1-28 | P2-28 |
| 29 | | P1-29 | P2-29 |
| 30 | | P1-30 | P2-30 |
| 31 | | P1-31 | P2-31 |
| 32 | | P1-32 | P2-32 |
| 33 | | P1-33 | P2-33 |
| 34 | | P1-34 | P2-34 |
| 35 | | P1-35 | P2-35 |

[1] Site dependent.
[2] Used for testing only. Disconnected when not in use.
[3] Supplied by vendor.
[4] Adapters.
[5] Wires tied back and insulated.
[6] FAA RMS.
[7] Power Monitor Filter 2A1FL1/5FL2 and/or 2A1FL2/105FL2 installed.
[8] Used on redundant systems only.

Table 7-2. Running Wire List - Cont.

| Conductor No. | Conductor Aux. | FROM | TO |
|---|---|---|---|
| | | 5/105W619 | |
| | | UD5/105A9J32 (P1) | UD5/105A10J14 (P2) |
| 36 | | P1-36 | P2-36 |
| 37 | | P1-37 | P2-37 |
| 38 | | P1-38 | P2-38 |
| 39 | | P1-39 | P2-39 |
| 40 | | P1-40 | P2-40 |
| 41 | | P1-41 | P2-41 |
| 42 | | P1-42 | P2-42 |
| 43 | | P1-43 | P2-43 |
| 44 | | P1-44 | P2-44 |
| 45 | | P1-45 | P2-45 |
| 46 | | P1-46 | P2-46 |
| 47 | | P1-47 | P2-47 |
| 48 | | P1-48 | P2-48 |
| 49 | | P1-49 | P2-49 |
| 50 | | P1-50 | P2-50 |
| | | 5/105W620 | |
| | | UD5/105A10J19 (P1) | UD5/105J22 (P2) |
| 1 | 1 | P1-1 | J22-1 |
| 1 | 2 | P1-2 | J22-20 |
| 2 | 1 | P1-3 | J22-2 |
| 2 | 2 | P1-4 | J22-21 |
| 3 | 1 | P1-5 | J22-3 |
| 3 | 2 | P1-6 | J22-22 |
| 4 | 1 | P1-7 | J22-4 |
| 4 | 2 | P1-8 | J22-23 |
| 5 | 1 | P1-9 | J22-5 |
| 5 | 2 | P1-10 | J22-24 |

[1] Site dependent.
[2] Used for testing only. Disconnected when not in use.
[3] Supplied by vendor.
[4] Adapters.
[5] Wires tied back and insulated.
[6] FAA RMS.
[7] Power Monitor Filter 2A1FL1/5FL2 and/or 2A1FL2/105FL2 installed.
[8] Used on redundant systems only.

Table 7-2. Running Wire List - Cont.

| Conductor No. | Conductor Aux. | FROM | TO |
|---|---|---|---|
| | | 5/105W620 | |
| | | UD5/105A10J19 (P1) | UD5/105J22 (P2) |
| 6 | 1 | P1-1 1 | J22-6 |
| 6 | 2 | P1-12 | J22-25 |
| 7 | 1 | P1-13 | J22-7 |
| 7 | 2 | P1-14 | J22-26 |
| 8 | 1 | P1-15 | J22-8 |
| 8 | 2 | P1-16 | J22-27 |
| 9 | 1 | P1-17 | J22-9 |
| 9 | 2 | P1-18 | J22-28 |
| 10 | 1 | P1-19 | J22-10 |
| 10 | 2 | P1-20 | J22-29 |
| 11 | 1 | P1-21 | J22-1 1 |
| 11 | 2 | P1-22 | J22-30 |
| 12 | 1 | P1-23 | J22-12 |
| 12 | 2 | P1-24 | J22-31 |
| 13 | 1 | P1-25 | J22-13 |
| 13 | 2 | P1-26 | J22-32 |
| 14 | 1 | P1-27 | J22-14 |
| 14 | 2 | P1-28 | J22-33 |
| 15 | 1 | P1-29 | J22-15 |
| 15 | 2 | P1-30 | J22-34 |
| 16 | 1 | P1-31 | J22-16 |
| 16 | 2 | P1-32 | J22-35 |
| 17 | 1 | P1-33 | J22-17 |
| 17 | 2 | P1-34 | J22-36 |
| 18 | 1 | P1-35 | J22-18 |
| 18 | 2 | P1-36 | J22-37 |
| SHLD | | | J22-GND |

1 Site dependent.
2 Used for testing only. Disconnected when not in use.
3 Supplied by vendor.
4 Adapters.
5 Wires tied back and insulated.
6 FAA RMS.
7 Power Monitor Filter 2A1FL1/5FL2 and/or 2A1FL2/105FL2 installed.
8 Used on redundant systems only.

Table 7-2. Running Wire List - Cont.

| Conductor No. | Aux. | FROM | TO |
|---|---|---|---|
| | | 5/105W622 | |
| | | UD5/105A6J1 (P1) | UD5/105A3J7 (P2) |
| 1 | | P1-A | P2-24 |
| 2 | | P1-B | P2-13 |
| 3 | | P1-C | P2-16 |
| 4 | | P1-D | P2-4 |
| 5 | | P1-E | P2-17 |
| 6 | | P1-F | P2-5 |
| 7 | | P1-G | P2-7 |
| 8 | | P1-H | P2-19 |
| 9 | | P1-J | P2-6 |
| 10 | | P1-K | P2-18 |
| 11 | | P1-M | P2-9 |
| 12 | | P1-N | P2-23 |
| 13 | | P1-R | P2-2 |
| 14 | | P1-S | P2-14 |
| 15 | | P1-T | P2-3 |
| 16 | | P1-U | P2-15 |
| 17 | | P1-L | P2-10 |
| 18 | | P1-P | P2-22 |
| 19 | | P1-V | P2-1 |
| 20 | | P1-W | P2-1[1] |
| 21 | | P1-X | P2-12 |
| 22 | | P1-Y | P2-8 |
| 23 | | P1-Z | P2-20 |
| 24 | | P1-a | P2-20 |
| 25 | | P1-b | P2-21 |
| SHLD | | | P2-GND |

[1] Site dependent.
[2] Used for testing only. Disconnected when not in use.
[3] Supplied by vendor.
[4] Adapters.
[5] Wires tied back and insulated.
[6] FAA RMS.
[7] Power Monitor Filter 2A1FL1/5FL2 and/or 2A1FL2/105FL2 installed.
[8] Used on redundant systems only.

Table 7-2. Running Wire List - Cont.

| Conductor No. | Conductor Aux. | FROM | TO |
|---|---|---|---|
| | | 5/105W623 | |
| | | UD5/105A16J0 (P1) | UD5/105A17B (P2) |
| 1 | 1 | P1-15 | P2-1 |
| 1 | 2 | P1-14 | P2-3 |
| 2 | 1 | P1-1 1 | P2-2 |
| 2 | 2 | P1-10 | P2-15 |
| 3 | 1 | P1-2 | P2-6 |
| 3 | 2 | P1-4 | P2-20 |
| 4 | 1 | P1-6 | P2-16 |
| 4 | 2 | P1-5 | P2-17 |
| 5 | 1 | P1-7 | P2-18 |
| 5 | 2 | P1-8 | P2-19 |
| SHLD | | P1-GND | P2-GND |
| 6 | | P2-1 | P2-7 |
| 7 | | P2-6 | P2-8 |
| 8 | | P1-4 | P1-12 |
| 9 | | P1-3 | P1-13 |
| 10 | | P2-4 | P2-5 |
| | | 5/105W625 | |
| | | UD5/105A6J4 (P1) | UD5/105A2TB1 |
| 1 | | P1-A | A2TB1-4 |
| 2 | | P1-B | A2TB1-3 |
| SHLD | | SHLD A | P1-D |
| 3 | | P1-D | P1-GND |
| | | 5/105W626 | |
| | | UD5/105A10J20 (P1) | UD5/105J23 (P2) |
| 1 | 1 | P1-3 | J23-3 |
| 1 | 2 | P1-4 | J23-4 |

1 Site dependent.
2 Used for testing only. Disconnected when not in use.
3 Supplied by vendor.
4 Adapters.
5 Wires tied back and insulated.
6 FAA RMS.
7 Power Monitor Filter 2A1FL1/5FL2 and/or 2A1FL2/105FL2 installed.
8 Used on redundant systems only.

Table 7-2. Running Wire List - Cont.

| Conductor No. | Conductor Aux. | FROM | TO |
|---|---|---|---|
| | | 5/105W626 | |
| | | UD5/105A10J20 (P1) | UD5/105J23 (P2) |
| 2 | 1 | P1-5 | J23-5 |
| 2 | 2 | P1-6 | J23-6 |
| 3 | 1 | P1-9 | J23-9 |
| 3 | 2 | P1-10 | J23-10 |
| 4 | 1 | P1-11 | J23-11 |
| 4 | 2 | P1-12 | J23-12 |
| 5 | 1 | | J23-13 |
| 5 | 2 | | J23-14 |
| 6 | 1 | | J23-15 |
| 6 | 2 | | J23-16 |
| SHLD | | | J23-GND |
| | | 5/105W627 | |
| | | UD5/105A10J21 (P1) | UD5/105J17 (P2) |
| 1 | | E101 | J17-CENTER |
| SHLD | | E102 | J17-CASE |
| 2 | | P1-2 | E102 |
| 3 | | P1-1 | E101 |
| | | 5/105W628 | |
| | | UD5/105A3J5 (P1) | UD5/105J5 (P2) |
| 1 | 1 | P1-1 | J5-1 |
| 1 | 2 | P1-34 | J5-34 |
| 2 | 1 | P1-18 | J5-18 |
| 2 | 2 | P1-2 | J5-2 |
| 3 | 1 | P1-35 | J5-35 |
| 3 | 2 | P1-19 | J5-19 |
| 4 | 1 | P1-3 | J5-3 |

[1] Site dependent.
[2] Used for testing only. Disconnected when not in use.
[3] Supplied by vendor.
[4] Adapters.
[5] Wires tied back and insulated.
[6] FAA RMS.
[7] Power Monitor Filter 2A1FL1/5FL2 and/or 2A1FL2/105FL2 installed.
[8] Used on redundant systems only.

Table 7-2. Running Wire List - Cont.

| Conductor No. | Conductor Aux. | FROM | TO |
|---|---|---|---|
| | | 5/105W628 | |
| | | UD5/105A3J5 (P1) | UD5/105J5 (P2) |
| 4 | 2 | P1-36 | J5-36 |
| 5 | 1 | P1-20 | J5-20 |
| 5 | 2 | P1-4 | J5-4 |
| 6 | 1 | P1-37 | J5-37 |
| 6 | 2 | P1-21 | J5-21 |
| 7 | 1 | P1-5 | J5-5 |
| 7 | 2 | P1-38 | J5-38 |
| 8 | 1 | P1-22 | J5-22 |
| 8 | 2 | P1-6 | J5-6 |
| 9 | 1 | P1-39 | J5-39 |
| 9 | 2 | P1-23 | J5-23 |
| 10 | 1 | P1-7 | J5-7 |
| 10 | 2 | P1-40 | J5-40 |
| 11 | 1 | P1-24 | J5-24 |
| 11 | 2 | P1-8 | J5-8 |
| 12 | 1 | P1-41 | J5-41 |
| 12 | 2 | P1-25 | J5-25 |
| 13 | 1 | P1-9 | J5-9 |
| 13 | 2 | P1-42 | J5-42 |
| 14 | 1 | P1-26 | J5-26 |
| 14 | 2 | P1-10 | J5-10 |
| 15 | 1 | P1-43 | J5-43 |
| 15 | 2 | P1-27 | J5-27 |
| 16 | 1 | P1-11 | J5-11 |
| 16 | 2 | P1-44 | J5-44 |
| 17 | 1 | P1-28 | J5-28 |
| 17 | 2 | P1-12 | J5-12 |

[1] Site dependent.
[2] Used for testing only. Disconnected when not in use.
[3] Supplied by vendor.
[4] Adapters.
[5] Wires tied back and insulated.
[6] FAA RMS.
[7] Power Monitor Filter 2A1FL1/5FL2 and/or 2A1FL2/105FL2 installed.
[8] Used on redundant systems only.

Table 7-2. Running Wire List - Cont.

| Conductor No. | Conductor Aux. | FROM | TO |
|---|---|---|---|
| | | 5/105W628 | |
| | | UD5/105A3J5 (P1) | UD5/105J5 (P2) |
| 18 | 1 | P1-15 | J5-15 |
| 18 | 2 | P1-31 | J5-31 |
| 19 | 1 | P1-13 | J5-13 |
| 19 | 2 | P1-14 | J5-14 |
| 20 | 1 | P1-30 | J5-30 |
| 20 | 2 | P1-29 | J5-29 |
| 21 | 1 | P1-17 | J5-17 |
| 21 | 2 | P1-33 | J5-33 |
| 22 | 1 | P1-16 | J5-16 |
| 22 | 2 | P1-32 | J5-32 |
| 23 | 1 | | |
| 23 | 2 | | |
| 24 | 1 | | |
| 24 | 2 | | |
| 25 | 1 | | |
| 25 | 2 | | |
| SHLD | | P1-GND | J5-GND |
| | | 5/105W629 | |
| | | UD5/105A3J6 (P1) | UD5/105J6 (P2) |
| 1 | 1 | P1-1 | J6-1 |
| 1 | 2 | P1-18 | J6-18 |
| 2 | 1 | P1-35 | J6-35 |
| 2 | 2 | P1-3 | J6-3 |
| 3 | 1 | P1-20 | J6-20 |
| 3 | 2 | P1-4 | J6-4 |
| 4 | 1 | P1-37 | J6-37 |
| 4 | 2 | P1-5 | J6-5 |

1 Site dependent.
2 Used for testing only. Disconnected when not in use.
3 Supplied by vendor.
4 Adapters.
5 Wires tied back and insulated.
6 FAA RMS.
7 Power Monitor Filter 2A1FL1/5FL2 and/or 2A1FL2/105FL2 installed.
8 Used on redundant systems only.

Table 7-2. Running Wire List - Cont.

| Conductor No. | Conductor Aux. | FROM | TO |
|---|---|---|---|
| | | 5/105W629 | |
| | | UD5/105A3J6 (P1) | UD5/105J6 (P2) |
| 5 | 1 | P1-22 | J6-22 |
| 5 | 2 | P1-39 | J6-39 |
| 6 | 1 | P1-7 | J6-7 |
| 6 | 2 | P1-40 | J6-40 |
| 7 | 1 | P1-24 | J6-24 |
| 7 | 2 | P1-8 | J6-8 |
| 8 | 1 | P1-41 | J6-41 |
| 8 | 2 | P1-25 | J6-25 |
| 9 | 1 | P1-9 | J6-9 |
| 9 | 2 | P1-42 | J6-42 |
| 10 | 1 | P1-26 | J6-26 |
| 10 | 2 | P1-10 | J6-10 |
| 11 | 1 | P1-43 | J6-43 |
| 11 | 2 | P1-27 | J6-27 |
| 12 | 1 | P1-1 1 | J6-1 1 |
| 12 | 2 | P1-44 | J6-44 |
| 13 | 1 | P1-28 | J6-28 |
| 13 | 2 | P1-12 | J6-12 |
| 14 | 1 | P1-45 | J6-45 |
| 14 | 2 | P1-29 | J6-29 |
| 15 | 1 | P1-13 | J6-13 |
| 15 | 2 | P1-46 | J6-46 |
| 16 | 1 | P1-30 | J6-30 |
| 16 | 2 | P1-14 | J6-14 |
| 17 | 1 | P1-48 | J6-48 |
| 17 | 2 | P1-32 | J6-32 |
| 18 | 1 | P1-16 | J6-16 |

1 Site dependent.
2 Used for testing only. Disconnected when not in use.
3 Supplied by vendor.
4 Adapters.
5 Wires tied back and insulated.
6 FAA RMS.
7 Power Monitor Filter 2A1FL1/5FL2 and/or 2A1FL2/105FL2 installed.
8 Used on redundant systems only.

Table 7-2. Running Wire List - Cont.

| Conductor No. | Conductor Aux. | FROM | TO |
|---|---|---|---|
| | | 5/105W629 | |
| | | UD5/105A3J6 (P1) | UD5/105J6 (P2) |
| 18 | 2 | P1-49 | J6-49 |
| 19 | 1 | P1-17 | J6-17 |
| 19 | 2 | P1-33 | J6-33 |
| SHLD | | P1-GND | J6-GND |
| | | 5/105W630 | |
| | | UD5/105A3J10 (P1) | UD5/105 PS1<br>PS2<br>PS3<br>XK1 |
| 1 | 1 | P1-1 | PS1(+V) |
| 1 | 2 | P1-20 | PS1(-V) |
| 2 | 1 | P1-2 | PS1(+V) |
| 2 | 2 | P1-21 | PS1(-V) |
| 3 | 1 | P1-3 | PS1(+V) |
| 3 | 2 | P1-22 | PS1(-V) |
| 4 | 1 | P1-4 | PS1(+V) |
| 4 | 2 | P1-23 | PS1(-V) |
| 5 | 1 | P1-6 | PS3(+OUT) |
| 5 | 2 | P1-25 | PS3(-OUT) |
| 6 | 1 | P1-7 | PS3(+OUT) |
| 6 | 2 | P1-26 | PS3(-OUT) |
| 7 | 1 | P1-8 | PS3(+OUT) |
| 7 | 2 | P1-27 | PS3(-OUT) |
| 8 | 1 | P1-9 | PS3(+OUT) |
| 8 | 2 | P1-28 | PS3(-OUT) |
| 9 | 1 | P1-10 | PS3(+OUT) |
| 9 | 2 | P1-29 | PS3(-OUT) |

1 Site dependent.
2 Used for testing only. Disconnected when not in use.
3 Supplied by vendor.
4 Adapters.
5 Wires tied back and insulated.
6 FAA RMS.
7 Power Monitor Filter 2A1FL1/5FL2 and/or 2A1FL2/105FL2 installed.
8 Used on redundant systems only.

Table 7-2. Running Wire List - Cont.

| Conductor No. | Conductor Aux. | FROM | TO |
|---|---|---|---|
| | | 5/105W630 | |
| | | UD5/105A3J10 (P1) | UD5/105 PS1<br>PS2<br>PS3<br>XK1 |
| SHLD | | SHLD | E101 |
| 10 | 1 | P1-11 | PS2(+OUT) |
| 10 | 2 | P1-30 | PS2(+RTN) |
| 11 | 1 | P1-15 | PS2(-OUT) |
| 11 | 2 | P1-34 | PS2(-RTN) |
| SHLD | | SHLD | E101 |
| 12 | | E101 | P1-GND |
| 13 | | P1-4 | P1-5 |
| 14 | | P1-11 | P1-12 |
| 15 | | P1-12 | P1-13 |
| 16 | | P1-13 | P1-14 |
| 17 | | P1-15 | P1-16 |
| 18 | | P1-16 | P1-17 |
| 19 | | P1-17 | P1-18 |
| 20 | | P1-23 | P1-24 |
| 21 | | P1-30 | P1-31 |
| 22 | | P1-31 | P1-32 |
| 23 | | P1-32 | P1-33 |
| 24 | | P1-34 | P1-35 |
| 25 | | P1-35 | P1-36 |
| 26 | | P1-36 | P1-37 |
| 27 | | E102 | XK1-B1 |

1 Site dependent.
2 Used for testing only. Disconnected when not in use.
3 Supplied by vendor.
4 Adapters.
5 Wires tied back and insulated.
6 FAA RMS.
7 Power Monitor Filter 2A1FL1/5FL2 and/or 2A1FL2/105FL2 installed.
8 Used on redundant systems only.

Table 7-2. Running Wire List - Cont.

| Conductor No. | Conductor Aux. | FROM | TO |
|---|---|---|---|
| | | 5/105W631 | |
| | | UD5/105A3J8 (P1) | UD5/105A16J9 (P2) |
| 1 | | P1-2 | P2-1 1 |
| 2 | | P1-3 | P2-14 |
| 3 | | P1-7 | P2-15 |
| SHLD | | SHLD A | E101 |
| | | E101 | P1-GND |
| | | SHLD B | P2-GND |
| | | 5/105W631 | |
| | | UD5/105A3J8 (P1) | UD5/105A16J4 (P3) |
| 1 | | P1-13 | P3-15 |
| 2 | | P1-14 | P3-14 |
| 3 | | P1-15 | P3-1 1 |
| SHLD | | SHLD A | E102 |
| | | E102 | P1-GND |
| | | SHLD B | P3-GND |
| | | 5/105W632 | |
| | | UD5/105A16J0 (P1) | UD5/105A4SES1-E1A (P2) |
| 1 | 1 | P1-15 | P2-1 |
| 1 | 2 | P1-14 | P2-3 |
| 2 | 1 | P1-1 1 | P2-2 |
| 2 | 2 | P1-10 | P2-15 |
| 3 | 1 | P1-2 | P2-6 |
| 3 | 2 | P1-4 | P2-20 |
| 4 | 1 | P1-6 | P2-16 |
| 4 | 2 | P1-5 | P2-17 |
| 5 | 1 | P1-7 | P2-18 |

1 Site dependent.
2 Used for testing only. Disconnected when not in use.
3 Supplied by vendor.
4 Adapters.
5 Wires tied back and insulated.
6 FAA RMS.
7 Power Monitor Filter 2A1FL1/5FL2 and/or 2A1FL2/105FL2 installed.
8 Used on redundant systems only.

Table 7-2. Running Wire List - Cont.

| Conductor No. | Conductor Aux. | FROM | TO |
|---|---|---|---|
| | | 5/105W632 | |
| | | UD5/105A16J0 (P1) | UD5/105A4SES1-E1A (P2) |
| 5 | 2 | P1-8 | P2-19 |
| SHLD | | P1-GND | P2-GND |
| 6 | | P2-1 | P2-7 |
| 7 | | P2-6 | P2-8 |
| 8 | | P1-4 | P1-12 |
| 9 | | P1-3 | P1-13 |
| 10 | | P2-4 | P2-5 |

1 Site dependent.
2 Used for testing only. Disconnected when not in use.
3 Supplied by vendor.
4 Adapters.
5 Wires tied back and insulated.
6 FAA RMS.
7 Power Monitor Filter 2A1FL1/5FL2 and/or 2A1FL2/105FL2 installed.
8 Used on redundant systems only.

Table 7-2. Running Wire List - Cont.

| Conductor No. | Conductor Aux. | FROM | TO |
|---|---|---|---|
| | | 5/105W633 | |
| | | UD5/105A17A (P1) | UD5/105J25 |
| 1 | 1 | P1-7 | J25-7 |
| 1 | 1 | P1-1 | J25-1 |
| 2 | 1 | P1-2 | J25-2 |
| 2 | 2 | P1-5 | J25-5 |
| 3 | 1 | P1-3 | J25-3 |
| 3 | 2 | P1-16 | J25-16 |
| 4 | 1 | P1-6 | J25-6 |
| 4 | 2 | P1-8 | J25-8 |
| 5 | 1 | P1-20 | J25-20 |
| 5 | 2 | P1-4 | J25-4 |
| 6 | 1 | P1-14 | J25-14 |
| 6 | 2 | P1-19 | J25-19 |
| SHLD | | P1-GND | J25-GND |
| | | 5/105W634 | |
| | | UD5/105A3J1 (P1) | UD5/105A2 |
| 1 | | P1-1 | R1-1 |
| 2 | | P1-4 | L1-CATHODE |
| 3 | | P1-5 | L3-CATHODE |
| 4 | | P1-6 | L5-CATHODE |
| 5 | | P1-7 | S2-1 |
| 6 | | P1-9 | LS1(-) |
| 7 | | P1-14 | R1-3 |
| 8 | | P1-18 | L2-CATHODE |
| 9 | | P1-19 | L4-CATHODE |
| 10 | | P1-20 | L1-ANODE |
| 11 | | P1-22 | LS1(+) |

1 Site dependent.
2 Used for testing only. Disconnected when not in use.
3 Supplied by vendor.
4 Adapters.
5 Wires tied back and insulated.
6 FAA RMS.
7 Power Monitor Filter 2A1FL1/5FL2 and/or 2A1FL2/105FL2 installed.
8 Used on redundant systems only.

Table 7-2. Running Wire List - Cont.

| Conductor No. | Conductor Aux. | FROM | TO |
|---|---|---|---|
| | | 5/105W634 | |
| | | UD5/105A3J1 (P1) | UD5/105A2 |
| 12 | 1 | P1-2 | R1-2 |
| 12 | 2 | P1-15 | S1-2 |
| SHLD | | SHLD A | E101 |
| | | E101 | E102 |
| 13 | 1 | P1-3 | R2-2 |
| 13 | 2 | P1-16 | S2-2 |
| SHLD | | SHLD A | E102 |
| | | E102 | E103 |
| 14 | 1 | P1-8 | S1-1 |
| 14 | 2 | P1-21 | S1-3 |
| SHLD | | SHLD A | E103 |
| | | E103 | P1-GND |
| | | 5/105W638 | |
| | | UD5/105A16J1 (P1) | UD5/105A4SES2-AUX (P2) |
| 1 | 1 | P1-15 | P2-1 |
| 1 | 2 | P1-14 | P2-2 |
| 2 | 1 | P1-1 1 | P2-3 |
| 2 | 2 | P1-10 | P2-15 |

1 Site dependent.
2 Used for testing only. Disconnected when not in use.
3 Supplied by vendor.
4 Adapters.
5 Wires tied back and insulated.
6 FAA RMS.
7 Power Monitor Filter 2A1FL1/5FL2 and/or 2A1FL2/105FL2 installed.
8 Used on redundant systems only.

Table 7-2. Running Wire List - Cont.

| Conductor No. | Conductor Aux. | FROM | TO |
|---|---|---|---|
| | | 5/105W638 | |
| | | UD5/105A16J1 (P1) | UD5/105A4SES2-AUX (P2) |
| 3 | 1 | P1-2 | P2-20 |
| 3 | 2 | P1-4 | P2-6 |
| 4 | 1 | P1-6 | P2-16 |
| 4 | 2 | P1-5 | P2-17 |
| 5 | 1 | P1-7 | P2-18 |
| 5 | 2 | P1-8 | P2-19 |
| SHLD | | P1-GND | P2-GND |
| 6 | | P2-1 | P2-7 |
| 7 | | P2-6 | P2-8 |
| 8 | | P1-4 | P1-12 |
| 9 | | P1-3 | P1-13 |
| 10 | | P2-4 | P2-8 |
| | | 5/105W639 | |
| | | UD5A17C (P1) | UD5/105A4SES1-EIA (P2) |
| 1 | 1 | P1-1 | P2-1 |
| 1 | 2 | P1-7 | P2-7 |
| 2 | 1 | P1-3 | P2-3 |
| 2 | 2 | P1-4 | P2-4 |
| 3 | 1 | P1-5 | P2-5 |
| 3 | 2 | P1-2 | P2-2 |
| 4 | 1 | P1-15 | P2-15 |
| 4 | 2 | P1-6 | P2-6 |
| 5 | 1 | P1-8 | P2-8 |
| 5 | 2 | P1-20 | P2-20 |
| 6 | 1 | P1-16 | P2-16 |

1 Site dependent.
2 Used for testing only. Disconnected when not in use.
3 Supplied by vendor.
4 Adapters.
5 Wires tied back and insulated.
6 FAA RMS.
7 Power Monitor Filter 2A1FL1/5FL2 and/or 2A1FL2/105FL2 installed.
8 Used on redundant systems only.

Table 7-2. Running Wire List - Cont.

| Conductor No. | Conductor Aux. | FROM | | TO |
|---|---|---|---|---|
| | | | 5/105W639 | |
| | | UD5A17C (P1) | | UD5/105A4SES1-EIA (P2) |
| 6 | 2 | P1-17 | | P2-17 |
| SHLD | | P1-GND | | P2-GND |
| | | | 5/105W640 | |
| | | UD5/105B1J1 (P1) | | UD5/105TB4 |
| | | | 5/105W648 | |
| | | UD5/105TB1<br>UD5/105TB3 | | UD5/105A2TB1 |
| 1 | | TB1-4 | | A2TB1-1 |
| 2 | | TB1-1 | | A2TB1-2 |
| SHLD | | SHLD A | | TB3 |
| | | | 5/105W649 | |
| | | UD5/105PS1 | | UD5/105A2TB1 |
| 1 | | PS1-L1 | | A2TB1-5 |
| 2 | | PS1-N2 | | A2TB1-3 |
| SHLD | | SHLD A | | E101 |
| | | E101 | | PS1-GND |
| | | | 5/105W660 | |
| | | UD5/105A3J11 (P1) | | UD5/105J12 |
| 1 | 1 | P1-1 | | J12-1 |
| 1 | 2 | P1-14 | | J12-14 |
| | SHLD | SHLD A | | P1-GND |
| 2 | 1 | P1-2 | | P12-2 |
| 2 | 2 | P1-15 | | J12-15 |
| | SHLD | SHLD A | | P1-GND |
| 3 | 1 | P1-3 | | J12-3 |

1 Site dependent.
2 Used for testing only. Disconnected when not in use.
3 Supplied by vendor.
4 Adapters.
5 Wires tied back and insulated.
6 FAA RMS.
7 Power Monitor Filter 2A1FL1/5FL2 and/or 2A1FL2/105FL2 installed.
8 Used on redundant systems only.

Table 7-2. Running Wire List - Cont.

| Conductor No. | Conductor Aux. | FROM | TO |
|---|---|---|---|
| | | 5/105W660 | |
| | | UD5/105A3J11 (P1) | UD5/105J12 |
| 3 | 2 | P1-7 | J12-7 |
| | SHLD | SHLD A | P1-GND |
| 4 | 1 | P1-4 | J12-4 |
| 4 | 2 | P1-16 | J12-16 |
| | SHLD | SHLD A | P1-GND |
| 5 | 1 | P1-5 | J12-5 |
| 5 | 2 | P1-17 | J12-17 |
| | SHLD | SHLD A | P1-GND |
| 6 | 1 | P1-6 | J12-6 |
| 6 | 2 | P1-10 | J12-10 |
| | SHLD | SHLD A | P1-GND |
| 7 | 1 | P1-8 | J12-8 |
| 7 | 2 | P1-9 | J12-9 |
| | SHLD | SHLD A | P1-GND |
| 8 | 1 | P1-1 1 | J12-1 1 |
| 8 | 2 | P1-41 | J12-41 |
| | SHLD | SHLD A | P1-GND |
| 9 | 1 | P1-12 | J12-12 |
| 9 | 2 | P1-50 | J12-50 |
| | SHLD | SHLD A | P1-GND |
| 10 | 1 | P1-13 | J12-13 |
| 10 | 2 | P1-19 | J12-19 |
| | SHLD | SHLD A | P1-GND |
| 11 | 1 | P1-18 | J12-18 |
| 11 | 2 | P1-40 | J12-40 |
| | SHLD | SHLD A | P1-GND |
| 12 | 1 | P1-20 | J12-20 |

1 Site dependent.
2 Used for testing only. Disconnected when not in use.
3 Supplied by vendor.
4 Adapters.
5 Wires tied back and insulated.
6 FAA RMS.
7 Power Monitor Filter 2A1FL1/5FL2 and/or 2A1FL2/105FL2 installed.
8 Used on redundant systems only.

Table 7-2. Running Wire List - Cont.

| Conductor No. | Conductor Aux. | FROM | TO |
|---|---|---|---|
| | | 5/105W660 | |
| | | UD5/105A3J11 (P1) | UD5/105J12 |
| 12 | 2 | P1-23 | J12-23 |
| | SHLD | SHLD A | P1-GND |
| 13 | 1 | P1-21 | J12-21 |
| 13 | 2 | P1-24 | J12-24 |
| | SHLD | SHLD A | P1-GND |
| 14 | 1 | P1-22 | J12-22 |
| 14 | 2 | P1-25 | J12-25 |
| | SHLD | SHLD A | P1-GND |
| 15 | 1 | P1-26 | J12-26 |
| 15 | 2 | P1-29 | J12-29 |
| | SHLD | SHLD A | P1-GND |
| 16 | 1 | P1-27 | J12-27 |
| 16 | 2 | P1-30 | J12-30 |
| | SHLD | SHLD A | P1-GND |
| 17 | 1 | P1-28 | J12-28 |
| 17 | 2 | P1-31 | J12-31 |
| | SHLD | SHLD A | P1-GND |
| 18 | 1 | P1-32 | J12-32 |
| 18 | 2 | P1-35 | J12-35 |
| | SHLD | SHLD A | P1-GND |
| 19 | 1 | P1-33 | J12-33 |
| 19 | 2 | P1-34 | J12-34 |
| | SHLD | SHLD A | P1-GND |
| 20 | 1 | P1-36 | J12-36 |
| 20 | 2 | P1-37 | J12-37 |
| | SHLD | SHLD A | P1-GND |
| 21 | 1 | P1-38 | J12-38 |

1 Site dependent.
2 Used for testing only. Disconnected when not in use.
3 Supplied by vendor.
4 Adapters.
5 Wires tied back and insulated.
6 FAA RMS.
7 Power Monitor Filter 2A1FL1/5FL2 and/or 2A1FL2/105FL2 installed.
8 Used on redundant systems only.

Table 7-2. Running Wire List - Cont.

| Conductor No. | Conductor Aux. | FROM | TO |
|---|---|---|---|
| | | 5/105W660 | |
| | | UD5/105A3J11 (P1) | UD5/105J12 |
| 21 | 2 | P1-39 | J12-39 |
| | SHLD | SHLD A | P1-GND |
| 22 | 1 | P1-42 | J12-42 |
| 22 | 2 | P1-44 | J12-44 |
| | SHLD | SHLD A | P1-GND |
| 23 | 1 | P1-43 | J12-43 |
| 23 | 2 | P1-49 | J12-49 |
| | SHLD | SHLD A | P1-GND |
| 24 | 1 | P1-45 | J12-45 |
| 24 | 2 | P1-48 | J12-48 |
| | SHLD | SHLD A | P1-GND |
| 25 | 1 | P1-46 | J12-46 |
| 25 | 2 | P1-47 | J12-47 |
| | SHLD | SHLD A | P1-GND |
| SHLD | | P1-GND | J12-GND |
| | | 5/105W661 | |
| | | UD5/105A3J4 (P1) | UD5/105J13 |
| 1 | 1 | P1-1 | J13-1 |
| 1 | 2 | P1-20 | J13-18 |
| | SHLD | SHLD A | P1-GND |
| 2 | 1 | P1-2 | P13-2 |
| 2 | 2 | P1-21 | J13-19 |
| | SHLD | SHLD A | P1-GND |
| 3 | 1 | P1-3 | J13-3 |
| 3 | 2 | P1-22 | J13-20 |
| | SHLD | SHLD A | P1-GND |
| 4 | 1 | P1-16 | J13-16 |

[1] Site dependent.
[2] Used for testing only. Disconnected when not in use.
[3] Supplied by vendor.
[4] Adapters.
[5] Wires tied back and insulated.
[6] FAA RMS.
[7] Power Monitor Filter 2A1FL1/5FL2 and/or 2A1FL2/105FL2 installed.
[8] Used on redundant systems only.

Table 7-2. Running Wire List - Cont.

| Conductor No. | Conductor Aux. | FROM | TO |
|---|---|---|---|
| | | 5/105W661 | |
| | | UD5/105A3J4 (P1) | UD5/105J13 |
| 4 | 2 | P1-35 | J13-33 |
| | SHLD | SHLD A | P1-GND |
| 5 | 1 | P1-17 | J13-34 |
| 5 | 2 | P1-36 | J13-35 |
| | SHLD | SHLD A | P1-GND |
| 6 | 1 | P1-18 | J13-36 |
| 6 | 2 | P1-37 | J13-37 |
| | SHLD | SHLD A | P1-GND |
| 7 | 1 | P1-38 | J13-38 |
| 7 | 2 | P1-39 | J13-39 |
| | SHLD | SHLD A | P1-GND |
| 8 | 1 | P1-4 | J13-4 |
| 8 | 2 | P1-23 | J13-21 |
| | SHLD | SHLD A | P1-GND |
| 9 | 1 | P1-5 | J13-5 |
| 9 | 2 | P1-24 | J13-22 |
| | SHLD | SHLD A | P1-GND |
| 10 | 1 | P1-6 | J13-6 |
| 10 | 2 | P1-25 | J13-23 |
| | SHLD | SHLD A | P1-GND |
| 11 | 1 | P1-7 | J13-7 |
| 11 | 2 | P1-26 | J13-24 |
| | SHLD | SHLD A | P1-GND |
| 12 | 1 | P1-8 | J13-8 |
| 12 | 2 | P1-27 | J13-25 |
| | SHLD | SHLD A | P1-GND |
| 13 | 1 | P1-9 | J13-9 |

1 Site dependent.
2 Used for testing only. Disconnected when not in use.
3 Supplied by vendor.
4 Adapters.
5 Wires tied back and insulated.
6 FAA RMS.
7 Power Monitor Filter 2A1FL1/5FL2 and/or 2A1FL2/105FL2 installed.
8 Used on redundant systems only.

Table 7-2. Running Wire List - Cont.

| Conductor No. | Conductor Aux. | FROM | TO |
|---|---|---|---|
| | | 5/105W661 | |
| | | UD5/105A3J4 (P1) | UD5/105J13 |
| 13 | 2 | P1-28 | J13-26 |
| | SHLD | SHLD A | P1-GND |
| 14 | 1 | P1-10 | J13-10 |
| 14 | 2 | P1-29 | J13-27 |
| | SHLD | SHLD A | P1-GND |
| 15 | 1 | P1-11 | J13-11 |
| 15 | 2 | P1-30 | J13-28 |
| | SHLD | SHLD A | P1-GND |
| 16 | 1 | P1-12 | J13-12 |
| 16 | 2 | P1-31 | J13-29 |
| | SHLD | SHLD A | P1-GND |
| 17 | 1 | P1-13 | J13-13 |
| 17 | 2 | P1-32 | J13-30 |
| | SHLD | SHLD A | P1-GND |
| 18 | 1 | P1-14 | J13-14 |
| 18 | 2 | P1-33 | J13-31 |
| | SHLD | SHLD A | P1-GND |
| 19 | 1 | P1-15 | J13-15 |
| 19 | 2 | P1-34 | J13-32 |
| | SHLD | SHLD A | P1-GND |
| SHLD | | P1-19 | J13-17 |
| | | 5/105W661[7] | |
| | | UD5/105FL2J1 (P1) | UD5/105J13 |
| 1 | 1 | P1-1 | J13-1 |
| 1 | 2 | P1-20 | J13-18 |
| | SHLD | SHLD A | P1-GND |
| 2 | 1 | P1-2 | P13-2 |

1 Site dependent.
2 Used for testing only. Disconnected when not in use.
3 Supplied by vendor.
4 Adapters.
5 Wires tied back and insulated.
6 FAA RMS.
7 Power Monitor Filter 2A1FL1/5FL2 and/or 2A1FL2/105FL2 installed.
8 Used on redundant systems only.

Table 7-2. Running Wire List - Cont.

| Conductor No. | Conductor Aux. | FROM | TO |
|---|---|---|---|
| | | 5/105W661[7] | |
| | | UD5/105FL2J1 (P1) | UD5/105J13 |
| 2 | 2 | P1-21 | J13-19 |
| | SHLD | SHLD A | P1-GND |
| 3 | 1 | P1-3 | J13-3 |
| 3 | 2 | P1-22 | J13-20 |
| | SHLD | SHLD A | P1-GND |
| 4 | 1 | P1-16 | J13-16 |
| 4 | 2 | P1-35 | J13-33 |
| | SHLD | SHLD A | P1-GND |
| 5 | 1 | P1-17 | J13-34 |
| 5 | 2 | P1-36 | J13-35 |
| | SHLD | SHLD A | P1-GND |
| 6 | 1 | P1-18 | J13-36 |
| 6 | 2 | P1-37 | J13-37 |
| | SHLD | SHLD A | P1-GND |
| 7 | 1 | P1-38 | J13-38 |
| 7 | 2 | P1-39 | J13-39 |
| | SHLD | SHLD A | P1-GND |
| 8 | 1 | P1-4 | J13-4 |
| 8 | 2 | P1-23 | J13-21 |
| | SHLD | SHLD A | P1-GND |
| 9 | 1 | P1-5 | J13-5 |
| 9 | 2 | P1-24 | J13-22 |
| | SHLD | SHLD A | P1-GND |
| 10 | 1 | P1-6 | J13-6 |
| 10 | 2 | P1-25 | J13-23 |
| | SHLD | SHLD A | P1-GND |
| 11 | 1 | P1-7 | J13-7 |

1 Site dependent.
2 Used for testing only. Disconnected when not in use.
3 Supplied by vendor.
4 Adapters.
5 Wires tied back and insulated.
6 FAA RMS.
7 Power Monitor Filter 2A1FL1/5FL2 and/or 2A1FL2/105FL2 installed.
8 Used on redundant systems only.

Table 7-2. Running Wire List - Cont.

| Conductor No. | Conductor Aux. | FROM | TO |
|---|---|---|---|
| | | 5/105W661[7] | |
| | | UD5/105FL2J1 (P1) | UD5/105J13 |
| 11 | 2 | P1-26 | J13-24 |
| | SHLD | SHLD A | P1-GND |
| 12 | 1 | P1-8 | J13-8 |
| 12 | 2 | P1-27 | J13-25 |
| | SHLD | SHLD A | P1-GND |
| 13 | 1 | P1-9 | J13-9 |
| 13 | 2 | P1-28 | J13-26 |
| | SHLD | SHLD A | P1-GND |
| 14 | 1 | P1-10 | J13-10 |
| 14 | 2 | P1-29 | J13-27 |
| | SHLD | SHLD A | P1-GND |
| 15 | 1 | P1-11 | J13-11 |
| 15 | 2 | P1-30 | J13-28 |
| | SHLD | SHLD A | P1-GND |
| 16 | 1 | P1-12 | J13-12 |
| 16 | 2 | P1-31 | J13-29 |
| | SHLD | SHLD A | P1-GND |
| 17 | 1 | P1-13 | J13-13 |
| 17 | 2 | P1-32 | J13-30 |
| | SHLD | SHLD A | P1-GND |
| 18 | 1 | P1-14 | J13-14 |
| 18 | 2 | P1-33 | J13-31 |
| | SHLD | SHLD A | P1-GND |
| 19 | 1 | P1-15 | J13-15 |
| 19 | 2 | P1-34 | J13-32 |
| | SHLD | SHLD A | P1-GND |
| SHLD | | P1-19 | J13-17 |

1 Site dependent.
2 Used for testing only. Disconnected when not in use.
3 Supplied by vendor.
4 Adapters.
5 Wires tied back and insulated.
6 FAA RMS.
7 Power Monitor Filter 2A1FL1/5FL2 and/or 2A1FL2/105FL2 installed.
8 Used on redundant systems only.

Table 7-2. Running Wire List - Cont.

| Conductor No. | Conductor Aux. | FROM | TO |
|---|---|---|---|
| | | 5/105W662 | |
| | | UD5/105A10J21 (P1) | UD5/105J17<br>UD5/105A3J12 (P2) |
| 1 | | J17-CENTER | E101 |
| SHLD | | J17-CASE | E102 |
| 2 | | E102 | P1-2 |
| 3 | | E101 | P1-1 |
| 4 | 1 | P1-7 | P2-2 |
| 4 | 2 | P1-8 | P2-10 |
| 5 | 1 | P1-11 | P2-12 |
| 5 | 2 | P1-12 | P2-4 |
| SHLD | | P1-GND | P2-GND |
| | | 5/105W663 | |
| | | UD5/105A16J8 (P1) | UD5/105A3J13 (P2) |
| 1 | 1 | P1-2 | P2-2 |
| 1 | 2 | P1-12 | P2-12 |
| 2 | 1 | P1-11 | P2-11 |
| 2 | 2 | P1-5 | P2-5 |
| 3 | 1 | P1-14 | P2-14 |
| 3 | 2 | P1-15 | P2-15 |
| 4 | 1 | P1-3 | P2-3 |
| 4 | 2 | P1-13 | P2-13 |
| 5 | 1 | P1-1 | P2-1 |
| 5 | 2 | P1-9 | P2-9 |
| 6 | 1 | P1-4 | P2-4 |
| 6 | 2 | P1-6 | P2-6 |
| SHLD | | P1-GND | P2-GND |

1 Site dependent.
2 Used for testing only. Disconnected when not in use.
3 Supplied by vendor.
4 Adapters.
5 Wires tied back and insulated.
6 FAA RMS.
7 Power Monitor Filter 2A1FL1/5FL2 and/or 2A1FL2/105FL2 installed.
8 Used on redundant systems only.

Table 7-2. Running Wire List - Cont.

| Conductor No. | Conductor Aux. | FROM | TO |
|---|---|---|---|
| | | 5/105W664[1] | |
| | | UD5/105J15 | UD5/105A3J14 (P1) |
| 1 | 1 | J15-1 | P1-1 |
| 1 | 2 | J15-9 | P1-9 |
| 2 | 1 | J15-2 | P1-2 |
| 2 | 2 | J15-10 | P1-10 |
| 3 | 1 | J15-3 | P1-3 |
| 3 | 2 | J15-11 | P1-11 |
| 4 | 1 | J15-4 | P1-4 |
| 4 | 2 | J15-12 | P1-12 |
| 5 | 1 | J15-5 | P1-5 |
| 5 | 2 | J15-13 | P1-13 |
| 6 | 1 | J15-7 | P1-7 |
| 6 | 2 | J15-15 | P1-15 |
| SHLD | | J15-GND | P1-GND |
| | | 5W665 | |
| | | UD5J15 | UD5A3J14 (P1)<br>UD5A19CTL (P2) |
| 1 | 1 | J15-1 | P1-1 |
| 1 | 2 | J15-9 | P1-9 |
| 2 | 1 | J15-2 | P1-2 |
| 2 | 2 | J15-10 | P1-10 |
| 3 | 1 | J15-3 | P1-3 |
| 3 | 2 | J15-11 | P1-11 |
| 4 | 1 | J15-4 | P1-4 |
| 4 | 2 | J15-12 | P1-12 |
| 5 | 1 | J15-5 | P1-5 |
| 5 | 2 | J15-13 | P1-13 |

1 Site dependent.
2 Used for testing only. Disconnected when not in use.
3 Supplied by vendor.
4 Adapters.
5 Wires tied back and insulated.
6 FAA RMS.
7 Power Monitor Filter 2A1FL1/5FL2 and/or 2A1FL2/105FL2 installed.
8 Used on redundant systems only.

Table 7-2. Running Wire List - Cont.

| Conductor No. | Conductor Aux. | FROM | TO |
|---|---|---|---|
| | | 5W665 | |
| | | UD5J15 | UD5A3J14 (P1)<br>UD5A19CTL (P2) |
| SHLD | | J15-GND | P1-GND |
| 6 | 1 | P1-6 | P2-1 |
| 6 | 2 | P1-14 | P2-2 |
| SHLD | | P1-GND | P2-GND |
| | | 5/105W666 | |
| | | UD5/105A17A1 (P1) | UD5/105A4SES1-EIA (P2) |
| 1 | 1 | P1-1 | P2-1 |
| 1 | 2 | P1-2 | P2-2 |
| 2 | 1 | P1-3 | P2-3 |
| 2 | 2 | P1-7 | P2-7 |
| 3 | 1 | P1-5 | P2-5 |
| 3 | 2 | P1-6 | P2-6 |
| 4 | 1 | P1-4 | P2-4 |
| 4 | 2 | P1-20 | P2-20 |
| 5 | 1 | P1-8 | P2-8 |
| 5 | 2 | P1-17 | P2-15 |
| SHLD | | P1-GND | P2-GND |
| | | 5/105W667 | |
| | | UD5/105A17A2 (P1) | UD5/105A4SES2-AUX (P2) |
| 1 | | P1-1 | P2-1 |
| 1 | | P1-2 | P2-3 |
| 2 | | P1-3 | P2-2 |
| 2 | | P1-7 | P2-7 |
| 3 | | P1-8 | P2-4 |

1 Site dependent.
2 Used for testing only. Disconnected when not in use.
3 Supplied by vendor.
4 Adapters.
5 Wires tied back and insulated.
6 FAA RMS.
7 Power Monitor Filter 2A1FL1/5FL2 and/or 2A1FL2/105FL2 installed.
8 Used on redundant systems only.

Table 7-2. Running Wire List - Cont.

| Conductor No. | Conductor Aux. | FROM | TO |
|---|---|---|---|
| | | 5/105W667 | |
| | | UD5/105A17A2 (P1) | UD5/105A4SES2-AUX (P2) |
| 3 | | P1-6 | P2-20 |
| 4 | | P1-17 | P2-15 |
| 4 | | P1-20 | P2-6 |
| SHLD | | P1-GND | P2-GND |
| 5 | | P2-20 | P2-8 |
| | | 5/105W668 | |
| | | UD5/105A16J1 (P1) | UD5/105A17C2 (P2) |
| 1 | 1 | P1-15 | P2-1 |
| 1 | 2 | P1-14 | P2-3 |
| 2 | 1 | P1-1 1 | P2-2 |
| 2 | 2 | P1-10 | P2-15 |
| 3 | 1 | P1-2 | P2-6 |
| 3 | 2 | P1-4 | P2-20 |
| 4 | 1 | P1-6 | P2-16 |
| 4 | 2 | P1-5 | P2-17 |
| 5 | 1 | P1-7 | P2-18 |
| 5 | 2 | P1-8 | P2-19 |
| SHLD | | P1-GND | P2-GND |
| 6 | | P2-1 | P2-7 |
| 7 | | P2-6 | P2-8 |
| 8 | | P1-4 | P1-12 |
| 9 | | P1-3 | P1-13 |
| 10 | | P2-4 | P2-5 |
| | | 5/105W669 | |
| | | UD5/105A16J0 (P1) | UD5/105A17C1 (P2) |

1 Site dependent.
2 Used for testing only. Disconnected when not in use.
3 Supplied by vendor.
4 Adapters.
5 Wires tied back and insulated.
6 FAA RMS.
7 Power Monitor Filter 2A1FL1/5FL2 and/or 2A1FL2/105FL2 installed.
8 Used on redundant systems only.

Table 7-2. Running Wire List - Cont.

| Conductor No. | Conductor Aux. | FROM | TO |
|---|---|---|---|
| | | 5/105W669 | |
| | | UD5/105A16J0 (P1) | UD5/105A17C1 (P2) |
| 1 | 1 | P1-15 | P2-1 |
| 1 | 2 | P1-14 | P2-3 |
| 2 | 1 | P1-11 | P2-2 |
| 2 | 2 | P1-10 | P2-15 |
| 3 | 1 | P1-2 | P2-6 |
| 3 | 2 | P1-4 | P2-20 |
| 4 | 1 | P1-6 | P2-16 |
| 4 | 2 | P1-5 | P2-17 |
| 5 | 1 | P1-7 | P2-18 |
| 5 | 2 | P1-8 | P2-19 |
| SHLD | | P1-GND | P2-GND |
| 6 | | P2-1 | P2-7 |
| 7 | | P2-6 | P2-8 |
| 8 | | P1-4 | P1-12 |
| 9 | | P1-3 | P1-13 |
| 10 | | P2-4 | P2-5 |
| | | 5/105W670 | |
| | | UD5/105A1J1 (P1) | UD5/105J11 |
| 1 | 1 | P1-1 | J11-1 |
| 1 | 2 | P1-9 | J11-9 |
| 2 | 1 | P1-11 | J11-2 |
| 2 | 2 | P1-3 | J11-10 |
| SHLD | | P1-2 | J11-5 |
| SHLD | | P1-GND | J11-GND |
| 3 | | P1-2 | P1-4 |

[1] Site dependent.
[2] Used for testing only. Disconnected when not in use.
[3] Supplied by vendor.
[4] Adapters.
[5] Wires tied back and insulated.
[6] FAA RMS.
[7] Power Monitor Filter 2A1FL1/5FL2 and/or 2A1FL2/105FL2 installed.
[8] Used on redundant systems only.

Table 7-2. Running Wire List - Cont.

| Conductor No. | Conductor Aux. | FROM | TO |
|---|---|---|---|
| | | 5/105W671 | |
| | | UD5/105A1J2 (P1) | UD5/105J16 |
| 1 | 1 | P1-1 | J16-1 |
| 1 | 2 | P1-9 | J16-9 |
| 2 | 1 | P1-11 | J16-2 |
| 2 | 2 | P1-3 | J16-10 |
| SHLD | | P1-2 | J16-5 |
| SHLD | | P1-GND | J16-GND |
| 3 | | P1-2 | P1-4 |
| | | 5/105W672[1] | |
| | | UD5/105A18J1DTE (P1) | UD5/105A1J1 (P2) |
| 1 | 1 | P1-1 | P2-1 |
| 1 | 2 | P1-9 | P2-9 |
| 2 | 1 | P1-3 | P2-3 |
| 2 | 2 | P1-11 | P2-11 |
| SHLD | | P1-2 | P2-2 |
| SHLD | | P1-GND | P2-GND |
| 3 | | P2-4 | P2-2 |
| 4 | | P1-4 | P1-2 |
| | | 5/105W673 | |
| | | UD5/105A18P1NETWK (P1) | UD5/105J11 |
| 1 | 1 | P1-1 | J11-1 |
| 1 | 2 | P1-9 | J11-9 |
| 2 | 1 | P1-3 | J11-10 |
| 2 | 2 | P1-11 | J11-2 |
| SHLD | | P1-2 | J11-5 |
| SHLD | | P1-GND | J11-GND |

1 Site dependent.
2 Used for testing only. Disconnected when not in use.
3 Supplied by vendor.
4 Adapters.
5 Wires tied back and insulated.
6 FAA RMS.
7 Power Monitor Filter 2A1FL1/5FL2 and/or 2A1FL2/105FL2 installed.
8 Used on redundant systems only.

Table 7-2. Running Wire List - Cont.

| Conductor No. | Conductor Aux. | FROM | TO |
|---|---|---|---|
| | | 5/105W673 | |
| | | UD5/105A18P1NETWK (P1) | UD5/105J11 |
| 3 | | P1-2 | P1-4 |
| | | 5W680 | |
| | | UD5A19A (P1) | UD5J28 |
| 1 | 1 | P1-1 | J28-1 |
| 1 | 2 | P1-9 | J28-9 |
| 2 | 1 | P1-3 | J28-3 |
| 2 | 2 | P1-1 1 | J28-1 1 |
| SHLD | | P1-2 | J28-2 |
| SHLD | | P1-GND | J28-GND |
| 3 | | P1-2 | P1-4 |
| 4 | | J28-2 | J28-4 |
| | | 5W681 | |
| | | UD5A17B1 (P1) | UD5J26 |
| 1 | 1 | P1-1 | J26-1 |
| 1 | 2 | P1-2 | J26-3 |
| 2 | 1 | P1-3 | J26-2 |

1 Site dependent.
2 Used for testing only. Disconnected when not in use.
3 Supplied by vendor.
4 Adapters.
5 Wires tied back and insulated.
6 FAA RMS.
7 Power Monitor Filter 2A1FL1/5FL2 and/or 2A1FL2/105FL2 installed.
8 Used on redundant systems only.

Table 7-2. Running Wire List - Cont.

| Conductor No. | Conductor Aux. | FROM | TO |
|---|---|---|---|
| | | 5W681 | |
| | | UD5A17B1 (P1) | UD5J26 |
| 2 | 2 | P1-7 | J26-7 |
| 3 | 1 | P1-6 | J26-14 |
| 3 | 2 | P1-8 | J26-4 |
| 4 | 1 | P1-20 | J26-6 |
| 4 | 2 | P1-19 | J26-15 |
| SHLD | | P1-GND | J26-GND |
| | | 5W682 | |
| | | UD5A17B2 (P1) | UD5J27 |
| 1 | 1 | P1-1 | J27-1 |
| 1 | 2 | P1-2 | J27-3 |
| 2 | 1 | P1-3 | J27-2 |
| 2 | 2 | P1-7 | J27-7 |
| 3 | 1 | P1-6 | J27-14 |
| 3 | 2 | P1-8 | J27-4 |
| 4 | 1 | P1-20 | J27-6 |
| 4 | 2 | P1-19 | J27-15 |
| SHLD | | P1-GND | J27-GND |
| | | 5W683 | |
| | | UD5A19B (P1) | UD5A1J1 (P2) |
| 1 | 1 | P1-1 | P2-1 |
| 1 | 2 | P1-9 | P2-9 |
| 2 | 1 | P1-3 | P2-3 |
| 2 | 2 | P1-1 1 | P2-1 1 |
| SHLD | | P1-2 | P2-2 |
| SHLD | | P1-GND | P2-GND |
| 3 | | P1-2 | P1-4 |

1 Site dependent.
2 Used for testing only. Disconnected when not in use.
3 Supplied by vendor.
4 Adapters.
5 Wires tied back and insulated.
6 FAA RMS.
7 Power Monitor Filter 2A1FL1/5FL2 and/or 2A1FL2/105FL2 installed.
8 Used on redundant systems only.

Table 7-2. Running Wire List - Cont.

| Conductor No. | Conductor Aux. | FROM | TO |
|---|---|---|---|
| | | 5W683 | |
| | | UD5A19B (P1) | UD5A1J1 (P2) |
| 4 | | P2-2 | P2-4 |
| | | 5W684 | |
| | | UD5A19COM (P2) | UD5A18J1DTE (P1) |
| 1 | 1 | P2-1 | P1-1 |
| 1 | 2 | P2-9 | P1-9 |
| 2 | 1 | P2-3 | P1-3 |
| 2 | 2 | P2-1 1 | P1-1 1 |
| SHLD | | P2-2 | P1-2 |
| SHLD | | P2-GND | P1-GND |
| 3 | | P2-2 | P2-4 |
| 4 | | P1-2 | P1-4 |
| | | 105W685 | |
| | | UD105A17B1 (P1) | UD105A20PORT1 (P2) |
| 1 | 1 | P1-1 | P2-1 |
| 1 | 2 | P1-2 | P2-3 |
| 2 | 1 | P1-3 | P2-2 |
| 2 | 2 | P1-7 | P2-7 |
| 3 | 1 | P1-6 | P2-20 |
| 3 | 2 | P1-8 | P2-4 |
| 4 | 1 | P1-20 | P2-6 |
| 4 | 2 | P1-19 | P2-19 |
| SHLD | | P1-GND | P2-GND |
| | | 105W686 | |
| | | UD105A17B2 (P1) | UD105A20PORT2 (P2) |
| 1 | 1 | P1-1 | P2-1 |
| 1 | 2 | P1-2 | P2-3 |

1 Site dependent.
2 Used for testing only. Disconnected when not in use.
3 Supplied by vendor.
4 Adapters.
5 Wires tied back and insulated.
6 FAA RMS.
7 Power Monitor Filter 2A1FL1/5FL2 and/or 2A1FL2/105FL2 installed.
8 Used on redundant systems only.

Table 7-2. Running Wire List - Cont.

| Conductor No. | Conductor Aux. | FROM | TO |
|---|---|---|---|
| | | 105W686 | |
| | | UD105A17B2 (P1) | UD105A20PORT2 (P2) |
| 2 | 1 | P1-3 | P2-2 |
| 2 | 2 | P1-7 | P2-7 |
| 3 | 1 | P1-6 | P2-20 |
| 3 | 2 | P1-8 | P2-4 |
| 4 | 1 | P1-20 | P2-6 |
| 4 | 2 | P1-19 | P2-19 |
| SHLD | | P1-GND | P2-GND |
| | | 105W687 | |
| | | UD105A20PORT3 (P1) | UD105J26 |
| 1 | 1 | P1-1 | J26-1 |
| 1 | 2 | P1-3 | J26-3 |
| 2 | 1 | P1-2 | J26-2 |
| 2 | 2 | P1-7 | J26-7 |
| 3 | 1 | P1-6 | J26-6 |
| 3 | 2 | P1-19 | J26-15 |
| 4 | 1 | P1-20 | J26-14 |
| 4 | 2 | P1-4 | J26-4 |
| SHLD | | P1-GND | J26-GND |
| | | 105W688 | |
| | | UD105A20PORT4 (P1) | UD105J27 |
| 1 | 1 | P1-1 | J27-1 |
| 1 | 2 | P1-3 | J27-3 |
| 2 | 1 | P1-2 | J27-2 |
| 2 | 2 | P1-7 | J27-7 |
| 3 | 1 | P1-6 | J27-6 |
| 3 | 2 | P1-19 | J27-15 |

[1] Site dependent.
[2] Used for testing only. Disconnected when not in use.
[3] Supplied by vendor.
[4] Adapters.
[5] Wires tied back and insulated.
[6] FAA RMS.
[7] Power Monitor Filter 2A1FL1/5FL2 and/or 2A1FL2/105FL2 installed.
[8] Used on redundant systems only.

Table 7-2. Running Wire List - Cont.

| Conductor No. | Conductor Aux. | FROM | TO |
|---|---|---|---|
| | | 105W688 | |
| | | UD105A20PORT4 (P1) | UD105J27 |
| 4 | 1 | P1-20 | J27-14 |
| 4 | 2 | P1-4 | J27-4 |
| SHLD | | P1-GND | J27-GND |
| | | 105W689 | |
| | | UD105A20TRUNK1 (P1) | UD105A21DTE (P2) |
| 1 | 1 | P1-1 | P2-1 |
| 1 | 2 | P1-2 | P2-2 |
| 2 | 1 | P1-3 | P2-3 |
| 2 | 2 | P1-7 | P2-7 |
| 3 | 1 | P1-5 | P2-5 |
| 3 | 2 | P1-6 | P2-6 |
| 4 | 1 | P1-4 | P2-4 |
| 4 | 2 | P1-20 | P2-20 |
| 5 | 1 | P1-8 | P2-8 |
| 5 | 2 | P1-17 | P2-17 |
| 6 | 1 | P1-15 | P2-15 |
| 6 | 2 | P1-19 | P2-19 |
| SHLD | | P1-GND | P2-GND |
| | | 105W690 | |
| | | UD105A21DIALLINE (P1) | UD105J11 |
| 1 | 1 | P1-3 | J11-3 |
| 1 | 2 | P1-4 | J11-4 |
| 2 | 1 | P1-5 | J11-5 |
| 2 | 2 | P1-6 | J11-6 |
| SHLD | | P1-GND | J11-GND |

1 Site dependent.
2 Used for testing only. Disconnected when not in use.
3 Supplied by vendor.
4 Adapters.
5 Wires tied back and insulated.
6 FAA RMS.
7 Power Monitor Filter 2A1FL1/5FL2 and/or 2A1FL2/105FL2 installed.
8 Used on redundant systems only.

Table 7-2. Running Wire List - Cont.

| Conductor No. | Conductor Aux. | FROM | TO |
|---|---|---|---|
| | | 5/105W691 | |
| | | UD5/105A9XA1 | UD5/105A10XA2 |
| 1 | | XA1-A90-GND | XA2-A30-GND |
| 2 | | XA1- A98- 4.8 MHz Clk | XA2-A24-4.8 MHz Clk |
| | | 5/105W692[7] | |
| | | UD5/105A3J4 (P1) | UD5/105FL2J2 (P2) |
| 1 | 1 | P1-1 | P2-1 |
| 1 | 2 | P1-20 | P2-20 |
| 2 | 1 | P1-2 | P2-2 |
| 2 | 2 | P1-21 | P2-21 |
| 3 | 1 | P1-3 | P2-3 |
| 3 | 2 | P1-22 | P2-22 |
| 4 | 1 | P1-4 | P2-4 |
| 4 | 2 | P1-23 | P2-23 |
| 5 | 1 | P1-5 | P2-5 |
| 5 | 2 | P1-24 | P2-24 |
| 6 | 1 | P1-6 | P2-6 |
| 6 | 2 | P1-25 | P2-25 |
| 7 | 1 | P1-7 | P2-7 |
| 7 | 2 | P1-26 | P2-26 |
| 8 | 1 | P1-8 | P2-8 |
| 8 | 2 | P1-27 | P2-27 |
| 9 | 1 | P1-9 | P2-9 |
| 9 | 2 | P1-28 | P2-28 |
| 10 | 1 | P1-10 | P2-10 |
| 10 | 2 | P1-29 | P2-29 |
| 11 | 1 | P1-1 1 | P2-1 1 |
| 11 | 2 | P1-30 | P2-30 |

1 Site dependent.
2 Used for testing only. Disconnected when not in use.
3 Supplied by vendor.
4 Adapters.
5 Wires tied back and insulated.
6 FAA RMS.
7 Power Monitor Filter 2A1FL1/5FL2 and/or 2A1FL2/105FL2 installed.
8 Used on redundant systems only.

Table 7-2. Running Wire List - Cont.

| Conductor No. | Conductor Aux. | FROM | TO |
|---|---|---|---|
| | | 5/105W692[7] | |
| | | UD5/105A3J4 (P1) | UD5/105FL2J2 (P2) |
| 12 | 1 | P1-12 | P2-12 |
| 12 | 2 | P1-31 | P2-31 |
| 13 | 1 | P1-13 | P2-13 |
| 13 | 2 | P1-32 | P2-32 |
| 14 | 1 | P1-14 | P2-14 |
| 14 | 2 | P1-33 | P2-33 |
| 15 | 1 | P1-15 | P2-15 |
| 15 | 2 | P1-34 | P2-34 |
| SHLD | | P1-GND | P2-GND |
| | | 5/105W693[7] | |
| | | UD5/105A3J4 (P1) | UD5/105FL2J2 (P2) |
| 1 | 1 | P1-1 | P2-1 |
| 1 | 2 | P1-20 | P2-20 |
| 2 | 1 | P1-2 | P2-2 |
| 2 | 2 | P1-21 | P2-21 |
| 3 | 1 | P1-3 | P2-3 |
| 3 | 2 | P1-22 | P2-22 |
| 4 | 1 | P1-16 | P2-16 |
| 4 | 2 | P1-35 | P2-35 |
| 5 | 1 | P1-17 | P2-17 |
| 5 | 2 | P1-36 | P2-36 |
| 6 | 1 | P1-18 | P2-18 |
| 6 | 2 | P1-37 | P2-37 |
| 7 | 1 | P1-38 | P2-38 |
| 7 | 2 | P1-39 | P2-39 |
| 8 | 1 | P1-4 | P2-4 |
| 8 | 2 | P1-23 | P2-23 |

1 Site dependent.
2 Used for testing only. Disconnected when not in use.
3 Supplied by vendor.
4 Adapters.
5 Wires tied back and insulated.
6 FAA RMS.
7 Power Monitor Filter 2A1FL1/5FL2 and/or 2A1FL2/105FL2 installed.
8 Used on redundant systems only.

Table 7-2. Running Wire List - Cont.

| Conductor No. | Conductor Aux. | FROM | TO |
|---|---|---|---|
| | | 5/105W693[7] | |
| | | UD5/105A3J4 (P1) | UD5/105FL2J2 (P2) |
| 9 | 1 | P1-5 | P2-5 |
| 9 | 2 | P1-24 | P2-24 |
| 10 | 1 | P1-6 | P2-6 |
| 10 | 2 | P1-25 | P2-25 |
| 11 | 1 | P1-7 | P2-7 |
| 11 | 2 | P1-26 | P2-26 |
| 12 | 1 | P1-8 | P2-8 |
| 12 | 2 | P1-27 | P2-27 |
| 13 | 1 | P1-9 | P2-9 |
| 13 | 2 | P1-28 | P2-28 |
| 14 | 1 | P1-10 | P2-10 |
| 14 | 2 | P1-29 | P2-29 |
| 15 | 1 | P1-1 1 | P2-1 1 |
| 15 | 2 | P1-30 | P2-30 |
| 16 | 1 | P1-12 | P2-12 |
| 16 | 2 | P1-31 | P2-31 |
| 17 | 1 | P1-13 | P2-13 |
| 17 | 2 | P1-32 | P2-32 |
| 18 | 1 | P1-14 | P2-14 |
| 18 | 2 | P1-33 | P2-33 |
| 19 | 1 | P1-15 | P2-15 |
| 19 | 2 | P1-34 | P2-34 |
| SHLD | | P1-GND | P2-GND |
| | | 5/105W700 | |
| | | UD5/105 TB1<br>TB3 | UD5/105J1 (P1) |
| 1 | | TB1-3 | J1-A |

1 Site dependent.
2 Used for testing only. Disconnected when not in use.
3 Supplied by vendor.
4 Adapters.
5 Wires tied back and insulated.
6 FAA RMS.
7 Power Monitor Filter 2A1FL1/5FL2 and/or 2A1FL2/105FL2 installed.
8 Used on redundant systems only.

Table 7-2. Running Wire List - Cont.

| Conductor No. | Conductor Aux. | FROM | TO |
|---|---|---|---|
| | | 5/105W700 | |
| | | UD5/105 TB1<br>TB3 | UD5/105J1 (P1) |
| 2 | | TB1-6 | J1-B |
| 3 | | TB1-8 | J1-C |
| 4 | | TB1-1 | J1-D |
| 5 | | TB3 | J1-E |
| | | 5/105W701 | |
| | | UD5/105A7J1 (P1) | UD5/105J2 (P2) |
| 1 | | P1-A | J2-A |
| 2 | | P1-B | J2-B |
| 3 | | P1-C | J2-C |
| 4 | | P1-D | J2-D |
| 5 | | P1-E | E101 |
| SHLD | | NC | E101 |
| 2 | | E101 | TB3 |
| 3 | | E101 | J2-E |
| | | 5/105W703 | |
| | | UD5/105J24 | UD5/105PS4<br>UD5/105A11TB1 |
| 1 | 1 | J24-A | PS4-L |
| | 2 | J24-B | PS4-N |
| | 3 | J24-D | NC |
| | 4 | J24-E | PS4-GND |
| | 5 | J24-C | NC |
| SHLD | | NC | PS4-GND |
| 2 | 1 | J24-A | E101 |
| | 2 | J24-D | E102 |
| SHLD | | NC | E103 |

[1] Site dependent.
[2] Used for testing only. Disconnected when not in use.
[3] Supplied by vendor.
[4] Adapters.
[5] Wires tied back and insulated.
[6] FAA RMS.
[7] Power Monitor Filter 2A1FL1/5FL2 and/or 2A1FL2/105FL2 installed.
[8] Used on redundant systems only.

Table 7-2. Running Wire List - Cont.

| Conductor No. | Conductor Aux. | FROM | | TO |
|---|---|---|---|---|
| | | | 5/105W703 | |
| | | UD5/105J24 | | UD5/105PS4<br>UD5/105A11TB1 |
| | | E103 | | A11-GND |
| 3 | 1 | E101 | | P1-LINE |
| | 2 | E102 | | P1-NEUTRAL |
| 4 | 1 | E101 | | P2-LINE |
| | 2 | E102 | | P2-NEUTRAL |
| | | | 5/105W704[1] | |
| | | UD5/105B1 (P1)<br>UD5/105B2 (P2)<br>UD5/105B3 (P3)<br>UD5/105B4 (P4) | | UD5/105TB1-1<br>UD5/105TB1-3 |
| 1 | 1 | P1-LINE | | TB1-3 |
| | 2 | P1-NEUTRAL | | TB1-1 |
| 2 | 1 | P2-LINE | | TB1-3 |
| | 2 | P2-NEUTRAL | | TB1-1 |
| 3 | 1 | P3-LINE | | E101 |
| | 2 | P3-NEUTRAL | | E102 |
| 4 | 1 | P4-LINE | | E101 |
| | 2 | P4-NEUTRAL | | E102 |
| 5 | 1 | E101 | | TB1-3 |
| | 2 | E102 | | TB1-1 |
| | | | 5/105W704[1] | |
| | | UD5/105J31 (P5) | | UD5/105B1 (P1)<br>UD5/105B2 (P2)<br>UD5/105B3 (P3)<br>UD5/105B4 (P4) |
| 1 | 1 | P5-W (NEUTRAL) | | E104 |

1 Site dependent.
2 Used for testing only. Disconnected when not in use.
3 Supplied by vendor.
4 Adapters.
5 Wires tied back and insulated.
6 FAA RMS.
7 Power Monitor Filter 2A1FL1/5FL2 and/or 2A1FL2/105FL2 installed.
8 Used on redundant systems only.

Table 7-2. Running Wire List - Cont.

| Conductor No. | Conductor Aux. | FROM | TO |
|---|---|---|---|
| | | 5/105W704[1] | |
| | | UD5/105J31 (P5) | UD5/105B1 (P1)<br>UD5/105B2 (P2)<br>UD5/105B3 (P3)<br>UD5/105B4 (P4) |
| 1 | 2 | P5-BK (LINE) | E103 |
| 2 | 1 | E104 | E102 |
| 2 | 2 | E103 | E101 |
| 3 | 1 | E102 | P1-NEUTRAL |
| 3 | 2 | E101 | P1-LINE |
| 4 | 1 | E102 | P2-NEUTRAL |
| 4 | 2 | E101 | P2-LINE |
| 5 | 1 | E104 | P3-NEUTRAL |
| 5 | 2 | E103 | P3-LINE |
| 6 | 1 | E104 | P4-NEUTRAL |
| 6 | 2 | E103 | P4-LINE |
| | | 5/105W704[1] | |
| | | UD5/105TB1 | UD5/105B1 (P1)<br>UD5/105B2 (P2) |
| 1 | 1 | TB1-3 | P1-LINE |
| 1 | 2 | TB1-1 | P1-NEUTRAL |
| 2 | 1 | TB1-3 | P2-LINE |
| 2 | 2 | TB1-1 | P2-NEUTRAL |
| | | 5/105W705 | |
| | | UD5/105A18TB1 | UD5/105A18PS1 |
| 1 | 1 | TB1-7 | PS1(+) |
| 1 | 2 | TB1-6 | PS1(-) |
| 2 | 2 | TB1-5 | GND |

1 Site dependent.
2 Used for testing only. Disconnected when not in use.
3 Supplied by vendor.
4 Adapters.
5 Wires tied back and insulated.
6 FAA RMS.
7 Power Monitor Filter 2A1FL1/5FL2 and/or 2A1FL2/105FL2 installed.
8 Used on redundant systems only.

Table 7-2. Running Wire List - Cont.

| Conductor No. | Conductor Aux. | FROM | TO |
|---|---|---|---|
| | | 5/105W706[1] | |
| | | UD5/105J31 (P3) | UD5/105B3 (P1)<br>UD5/105B4 (P2) |
| 1 | 1 | P3-W (NEUTRAL) | E102 |
| 1 | 2 | P3-BK (LINE) | E101 |
| 2 | 1 | E102 | P1 (NEUTRAL) |
| 2 | 2 | E101 | P1 (LINE) |
| 3 | 1 | E102 | P2 (NEUTRAL) |
| 3 | 2 | E101 | P2 (LINE) |
| | | 5/105W707 | |
| | | UD5/105J31 (P1) | UD5/105A2 |
| 1 | | P1-BK | S4-2 |
| 2 | | P1-W | TB1-2 |
| | | 5/105W708 | |
| | | UD5/105FL1-LOAD | UD5/105A24TB1<br>UD5/105TB1<br>UD5/105PS5 |
| 1 | | FL1-LOAD1 | A24TB1-4 |
| 2 | | FL1-LOAD2 | A24TB1-6 |
| 3 | 1 | A24TB1-7 | TB1-1 |
| 3 | 2 | A24TB1-8 | TB1-6 |
| 3 | 3 | A24TB1-9 | TB1-3 |
| 4 | | A24TB1-1 1 | PS5-GND |
| 5 | | A24TB1-12 | PS5-U |
| | | 5/105W709 | |
| | | UD5/105J29 | UD5/105FL1/105 |
| 1 | | J29-A | FL1/105 LINE 1 |
| 2 | | J29-B | FL1/105 LINE 2 |

1 Site dependent.
2 Used for testing only. Disconnected when not in use.
3 Supplied by vendor.
4 Adapters.
5 Wires tied back and insulated.
6 FAA RMS.
7 Power Monitor Filter 2A1FL1/5FL2 and/or 2A1FL2/105FL2 installed.
8 Used on redundant systems only.

Table 7-2. Running Wire List - Cont.

| Conductor No. | Conductor Aux. | FROM | TO |
|---|---|---|---|
| | | 5/105W709 | |
| | | UD5/105J29 | UD5/105FL1/105 |
| 3 | | SHLD | FL1/105 LINE GND |
| | | 5/105W900 | |
| | | UD5A16J0 (P1) | 5CP1@UD5A32 COMM3 (P2) |
| 1 | 1 | P1-15 | P2-1 |
| 1 | 2 | P1-14 | P2-3 |
| 2 | 1 | P1-1 1 | P2-2 |
| 2 | 2 | P1-10 | P2-15 |
| 3 | 1 | P1-2 | P2-6 |
| 3 | 2 | P1-4 | P2-20 |
| 4 | 1 | P1-6 | P2-16 |
| 4 | 2 | P1-5 | P2-17 |
| 5 | 1 | P1-7 | P2-18 |
| 5 | 2 | P1-8 | P2-19 |
| SHLD | | P1-GND | P2-GND |
| 6 | | P2-1 | P2-7 |
| 7 | | P2-6 | P2-8 |
| 8 | | P1-4 | P1-12 |
| 9 | | P1-3 | P1-13 |
| 10 | | P2-4 | P2-5 |
| | | 5/105W901 | |
| | | UD5A16J1 (P1) | 5A35@UD5A32 COMM4 (P2) |
| 1 | 1 | P1-15 | P2-1 |
| 1 | 2 | P1-14 | P2-2 |
| 2 | 1 | P1-1 1 | P2-3 |
| 2 | 2 | P1-10 | P2-15 |

1 Site dependent.
2 Used for testing only. Disconnected when not in use.
3 Supplied by vendor.
4 Adapters.
5 Wires tied back and insulated.
6 FAA RMS.
7 Power Monitor Filter 2A1FL1/5FL2 and/or 2A1FL2/105FL2 installed.
8 Used on redundant systems only.

Table 7-2. Running Wire List - Cont.

| Conductor No. | Conductor Aux. | FROM | TO |
|---|---|---|---|
| | | 5/105W901 | |
| | | UD5A16J1 (P1) | 5A35@UD5A32 COMM4 (P2) |
| 3 | 1 | P1-2 | P2-20 |
| 3 | 2 | P1-4 | P2-6 |
| 4 | 1 | P1-6 | P2-16 |
| 4 | 2 | P1-5 | P2-17 |
| 5 | 1 | P1-7 | P2-18 |
| 5 | 2 | P1-8 | P2-19 |
| SHLD | | P1-GND | P2-GND |
| 6 | | P2-1 | P2-7 |
| 7 | | P2-6 | P2-8 |
| 8 | | P1-4 | P1-12 |
| 9 | | P1-3 | P1-13 |
| 10 | | P2-4 | P2-8 |
| | | 5/105W902 | |
| | | UD5E1 (P1) | UD5A32A3 TELCO (P2) |
| | | 5/105W902A | |
| | | UD5/105E1 (P1) | UD5/105A38 TELCO (P2) |
| | | 5/105W903 | |
| | | UD5A17C (P1) | 5CP1@UD5A32 COMM3 (P2) |
| 1 | 1 | P1-1 | P2-1 |
| 1 | 2 | P1-7 | P2-7 |
| 2 | 1 | P1-3 | P2-3 |
| 2 | 2 | P1-4 | P2-4 |
| 3 | 1 | P1-5 | P2-5 |

1 Site dependent.
2 Used for testing only. Disconnected when not in use.
3 Supplied by vendor.
4 Adapters.
5 Wires tied back and insulated.
6 FAA RMS.
7 Power Monitor Filter 2A1FL1/5FL2 and/or 2A1FL2/105FL2 installed.
8 Used on redundant systems only.

Table 7-2. Running Wire List - Cont.

| Conductor No. | Conductor Aux. | FROM | TO |
|---|---|---|---|
| | | 5/105W903 | |
| | | UD5A17C (P1) | 5CP1@UD5A32 COMM3 (P2) |
| 3 | 2 | P1-2 | P2-2 |
| 4 | 1 | P1-15 | P2-15 |
| 4 | 2 | P1-6 | P2-6 |
| 5 | 1 | P1-8 | P2-8 |
| 5 | 2 | P1-20 | P2-20 |
| 6 | 1 | P1-16 | P2-16 |
| 6 | 2 | P1-17 | P2-17 |
| SHLD | | P1-GND | P2-GND |
| | | 5/105W907 | |
| | | UD5/105A17A1 (P1) | 5/105CP1@UD5/105 A38COMM3 (P2) |
| 1 | 1 | P1-1 | P2-1 |
| 1 | 2 | P1-2 | P2-2 |
| 2 | 1 | P1-3 | P2-3 |
| 2 | 2 | P1-7 | P2-7 |
| 3 | 1 | P1-5 | P2-5 |
| 3 | 2 | P1-6 | P2-6 |
| 4 | 1 | P1-4 | P2-4 |
| 4 | 2 | P1-20 | P2-20 |
| 5 | 1 | P1-8 | P2-8 |
| 5 | 2 | P1-17 | P2-15 |
| SHLD | | P1-GND | P2-GND |
| | | 5/105W910 | |
| | | UD5/105J32 (P1) | UD5/105A37J1 (P2) |
| 1 | 1 | NC | NC |
| 1 | 2 | P1-1 | P2-1 |

1 Site dependent.
2 Used for testing only. Disconnected when not in use.
3 Supplied by vendor.
4 Adapters.
5 Wires tied back and insulated.
6 FAA RMS.
7 Power Monitor Filter 2A1FL1/5FL2 and/or 2A1FL2/105FL2 installed.
8 Used on redundant systems only.

Table 7-2. Running Wire List - Cont.

| Conductor No. | Conductor Aux. | FROM | TO |
|---|---|---|---|
| | | 5/105W910 | |
| | | UD5/105J32 (P1) | UD5/105A37J1 (P2) |
| | SHLD | NC | NC |
| 2 | 1 | P1-4 | P2-4 |
| 2 | 2 | P1-2 | P2-2 |
| | SHLD | P1-3 | P2-3 |
| 3 | 1 | P1-11 | P2-11 |
| 3 | 2 | P1-8 | P2-8 |
| | SHLD | P1-9 | P2-9 |
| 4 | 1 | P1-10 | P2-10 |
| 4 | 2 | P1-5 | P2-5 |
| | SHLD | P1-6 | P2-6 |
| 5 | 1 | P1-16 | P2-16 |
| 5 | 2 | P1-7 | P2-7 |
| | SHLD | P1-15 | P2-15 |
| 6 | 1 | P1-14 | P2-14 |
| 6 | 2 | P1-13 | P2-13 |
| | SHLD | P1-12 | P2-12 |
| | | 5/105W911 | |
| | | UD5/105A16J14 (P1) | UD5/105J31 (P2) |
| 1 | 1 | P1-11 | P2-2 |
| 1 | 2 | P1-14 | P2-3 |
| | SHLD | NC | P2-1 |
| 2 | 1 | NC | NC |
| 2 | 2 | P1-15 | P2-7 |
| | SHLD | NC | P2-1 |
| 3 | | P1-3 | P1-13 |
| 4 | | P1-2 | P1-4 |
| 9 | | P1-2 | P1-12 |

1 Site dependent.
2 Used for testing only. Disconnected when not in use.
3 Supplied by vendor.
4 Adapters.
5 Wires tied back and insulated.
6 FAA RMS.
7 Power Monitor Filter 2A1FL1/5FL2 and/or 2A1FL2/105FL2 installed.
8 Used on redundant systems only.

Table 7-2. Running Wire List - Cont.

| Conductor No. | Conductor Aux. | FROM | TO |
|---|---|---|---|
| | | 5/105W911 | |
| | | UD5/105A16J14 (P1) | UD5/105J31 (P2) |
| 6 | | P2-4 | P2-5 |
| 7 | | P2-20 | P2-8 |
| 8 | | P2-20 | P2-6 |
| | | 5/105W912 | |
| | | UD5/105A16J11 (P1) | UD5/105J30 (P2) |
| 1 | 1 | P1-2 | P2-6 |
| 1 | 2 | P1-1 1 | P2-2 |
| | SHLD | NC | P2-1 |
| 2 | 1 | P1-12 | P2-20 |
| 2 | 2 | P1-15 | P2-7 |
| | SHLD | NC | P2-1 |
| 3 | 1 | NC | NC |
| 3 | 2 | P1-14 | P2-3 |
| | SHLD | NC | P2-1 |
| 4 | | P1-12 | P1-4 |
| 5 | | P1-3 | P1-13 |
| 6 | | P2-6 | P2-8 |
| 7 | | P2-4 | P2-5 |
| | | 5/105W914 | |
| | | UD5J25 (P1) | 5CP2@UD5A32 COMM1 (P2) |
| 1 | 1 | P1-7 | J25-7 |
| 1 | 1 | P1-1 | J25-1 |
| 2 | 1 | P1-2 | J25-2 |
| 2 | 2 | P1-5 | J25-5 |
| 3 | 1 | P1-3 | J25-3 |

1 Site dependent.
2 Used for testing only. Disconnected when not in use.
3 Supplied by vendor.
4 Adapters.
5 Wires tied back and insulated.
6 FAA RMS.
7 Power Monitor Filter 2A1FL1/5FL2 and/or 2A1FL2/105FL2 installed.
8 Used on redundant systems only.

Table 7-2. Running Wire List - Cont.

| Conductor No. | Conductor Aux. | FROM | TO |
|---|---|---|---|
| | | 5/105W914 | |
| | | UD5J25 (P1) | 5CP2@UD5A32 COMM1 (P2) |
| 3 | 2 | P1-16 | J25-16 |
| 4 | 1 | P1-6 | J25-6 |
| 4 | 2 | P1-8 | J25-8 |
| 5 | 1 | P1-20 | J25-20 |
| 5 | 2 | P1-4 | J25-4 |
| 6 | 1 | P1-14 | J25-14 |
| 6 | 2 | P1-19 | J25-19 |
| SHLD | | P1-GND | J25-GND |
| | | 5/105W916 | |
| | | UD5/105A17A2 (P1) | 5/105A41@ UD5/105A38COMM4 (P2) |
| 1 | | P1-1 | P2-1 |
| 1 | | P1-2 | P2-3 |
| 2 | | P1-3 | P2-2 |
| 2 | | P1-7 | P2-7 |
| 3 | | P1-8 | P2-4 |
| 3 | | P1-6 | P2-20 |
| 4 | | P1-17 | P2-15 |
| 4 | | P1-20 | P2-6 |
| SHLD | | P1-GND | P2-GND |
| 5 | | P2-20 | P2-8 |
| | | 5/105A37W1 | |
| | | UD5/105A37TB1 (P1) | UD5/105A1J3 |

1 Site dependent.
2 Used for testing only. Disconnected when not in use.
3 Supplied by vendor.
4 Adapters.
5 Wires tied back and insulated.
6 FAA RMS.
7 Power Monitor Filter 2A1FL1/5FL2 and/or 2A1FL2/105FL2 installed.
8 Used on redundant systems only.

Table 7-2. Running Wire List - Cont.

| Conductor No. | Conductor Aux. | FROM | | TO |
|---|---|---|---|---|
| | | | 5A1W1 | |
| | | UD5A1J3 (P1) | | UD5A1TB1 |
| 1 | | P1-9 | | 5A1TB1-1 |
| 2 | | P1-2 | | 5A1TB1-3 |
| 3 | | P1-12 | | 5A1TB1-4 |
| 4 | | P1-1 | | 5A1TB1-5 |
| | | | 19W1[1] | |
| | | UD19J3 (P1) | | UD7A3/30[1] SEC PWR PNL (P2) CB24/26 |
| 1 | | P1-A | | P2-1 |
| 2 | | P1-B | | P2-2 |
| 3 | | P1-C | | P2-3 |
| | | | GND CA | |
| | | UD3/103E1 (E1) | | UD1E4 (E2) |
| | | | GND CA | |
| | | UD4/104E1 (E1) | | UD1E1 (E2) |
| | | | GND CA | |
| | | UD5/105E1 (E1) | | UD1E3 (E2) |
| | | | GND CA | |
| | | W55/W155P2 (E1) | | W56/W156P2 (E2) |
| | | | GND CA | |
| | | W55/W155P2 (E1) | | UD1E3 (E2) |
| | | | GND CA | |
| | | UD1W/G FLANGE (E1) | | UD1E2 (E2) |
| | | | GND CA | |
| | | UD70/170E1 (E1) | | UD1E4 (E2) |
| | | | GND CA | |
| | | A25/A26E1 (E1) | | UD1E1 (E2) |

1 Site dependent.
2 Used for testing only. Disconnected when not in use.
3 Supplied by vendor.
4 Adapters.
5 Wires tied back and insulated.
6 FAA RMS.
7 Power Monitor Filter 2A1FL1/5FL2 and/or 2A1FL2/105FL2 installed.
8 Used on redundant systems only.

Table 7-2. Running Wire List - Cont.

| Conductor No. | Aux. | FROM | | TO |
|---|---|---|---|---|
| | | | GND CA | |
| | | UD19GND (E1) | | UD1E4 (E2) |
| | | | 17-329 [1] | |
| | | UD5A12 SLOT0000 | | UD5A13 SLOT0700 |
| | | | 17-564 | |
| | | UD5A15 | | UD5A14J7 |
| | | FAN1-A | | P14-2 |
| | | FAN1-B | | P14-3 |
| | | FAN2-A | | P14-1 |
| | | FAN2-B | | P14-4 |
| | | FAN3-A | | P14-2 |
| | | FAN3-B | | P14-3 |
| | | FAN4-A | | P14-1 |
| | | FAN4-B | | P14-4 |
| | | | 17-605 | |
| | | UD5/105A13 | | UD5/105A14J8 |
| | | CONN1-1 | | P13-1 |
| | | CONN1-2 | | P13-4 |
| | | | 17-688F01 | |
| | | UD5/105A12A21J1 | | UD5/105A12AT1 CONN3 |
| | | | 17-704F01 | |
| | | UD5/105PS5A1J7 (P7/P8) | | UD5/105A13J6 (P6) |
| | | P7/P8-1 | | P6-1 |
| | | P7/P8-2 | | P6-2 |
| | | P7/P8-3 | | P6-3 |

1 Site dependent.
2 Used for testing only. Disconnected when not in use.
3 Supplied by vendor.
4 Adapters.
5 Wires tied back and insulated.
6 FAA RMS.
7 Power Monitor Filter 2A1FL1/5FL2 and/or 2A1FL2/105FL2 installed.
8 Used on redundant systems only.

Table 7-2. Running Wire List - Cont.

| Conductor No. | Conductor Aux. | FROM | TO |
|---|---|---|---|
| | | 17-704F02 | |
| | | UD5/105A24TB1 | UD5/105A13J6 (P6) |
| | | TB1-1 | P6-1 |
| | | TB1-2 | P6-2 |
| | | TB1-3 | P6-3 |
| | | 17-705 | |
| | | UD5PS5J2 (P2) | UD5/105A12A3J5B (P5B)<br>UD5/105A13J5 (P5A) |
| | | P2-100 | P5B-100 |
| | | P2-200 | P5B-200 |
| | | P2-101 | P5B-101 |
| | | P2-201 | P5B-201 |
| | | P2-102 | P5B-102 |
| | | P2-202 | P5B-202 |
| | | P2-103 | P5B-103 |
| | | P2-203 | P5B-203 |
| | | P2-104 | P5B-104 |
| | | P2-204 | P5B-204 |
| | | P2-105 | P5A-100 |
| | | P2-205 | P5A-200 |
| | | P2-106 | P5A-101 |
| | | P2-206 | P5A-201 |
| | | P2-107 | P5A-102 |
| | | P2-207 | P5A-202 |
| | | P2-108 | P5A-103 |
| | | P2-208 | P5A-203 |
| | | P2-109 | P5A-104 |
| | | P2-209 | P5A-204 |

1 Site dependent.
2 Used for testing only. Disconnected when not in use.
3 Supplied by vendor.
4 Adapters.
5 Wires tied back and insulated.
6 FAA RMS.
7 Power Monitor Filter 2A1FL1/5FL2 and/or 2A1FL2/105FL2 installed.
8 Used on redundant systems only.

Table 7-2. Running Wire List - Cont.

| Conductor No. | Conductor Aux. | FROM | TO |
|---|---|---|---|
| | | 17-706F05 | |
| | | UD5/105PS5J6 (P6) | UD5/105A15J1 (P1) |
| | | P6-1 | P1-1 |
| | | P6-2 | P1-2 |
| | | P6-3 | P1-3 |
| | | P6-4 | P1-4 |
| | | P6-5 | P1-5 |
| | | P6-6 | P1-6 |
| | | P6-7 | P1-7 |
| | | P6-8 | P1-8 |
| | | P6-9 | P1-9 |
| | | P6-10 | P1-10 |
| | | P6-11 | P1-11 |
| | | P6-12 | P1-12 |
| | | P6-13 | P1-13 |
| | | P6-14 | P1-14 |
| | | P6-15 | P1-15 |
| | | P6-16 | P1-16 |
| | | P6-17 | P1-17 |
| | | P6-18 | P1-18 |
| | | P6-19 | P1-19 |
| | | P6-20 | P1-20 |
| | | P6-21 | P1-21 |
| | | P6-22 | P1-22 |
| | | P6-23 | P1-23 |
| | | P6-24 | P1-24 |
| | | P6-25 | P1-25 |
| | | P6-26 | P1-26 |
| | | P6-27 | P1-27 |

1 Site dependent.
2 Used for testing only. Disconnected when not in use.
3 Supplied by vendor.
4 Adapters.
5 Wires tied back and insulated.
6 FAA RMS.
7 Power Monitor Filter 2A1FL1/5FL2 and/or 2A1FL2/105FL2 installed.
8 Used on redundant systems only.

Table 7-2. Running Wire List - Cont.

| Conductor No. | Conductor Aux. | FROM | TO |
|---|---|---|---|
| | | 17-706F05 | |
| | | UD5/105PS5J6 (P6) | UD5/105A15J1 (P1) |
| | | P6-28 | P1-28 |
| | | P6-29 | P1-29 |
| | | P6-30 | P1-30 |
| | | P6-31 | P1-31 |
| | | P6-32 | P1-32 |
| | | P6-33 | P1-33 |
| | | P6-34 | P1-34 |
| | | P6-35 | P1-35 |
| | | P6-36 | P1-36 |
| | | P6-37 | P1-37 |
| | | P6-38 | P1-38 |
| | | P6-39 | P1-39 |
| | | P6-40 | P1-40 |
| | | P6-41 | P1-41 |
| | | P6-42 | P1-42 |
| | | P6-43 | P1-43 |
| | | P6-44 | P1-44 |
| | | P6-45 | P1-45 |
| | | P6-46 | P1-46 |
| | | P6-47 | P1-47 |
| | | P6-48 | P1-48 |
| | | P6-49 | P1-49 |
| | | P6-50 | P1-50 |
| | | P6-51 | P1-51 |
| | | P6-52 | P1-52 |
| | | P6-53 | P1-53 |
| | | P6-54 | P1-54 |

1 Site dependent.
2 Used for testing only. Disconnected when not in use.
3 Supplied by vendor.
4 Adapters.
5 Wires tied back and insulated.
6 FAA RMS.
7 Power Monitor Filter 2A1FL1/5FL2 and/or 2A1FL2/105FL2 installed.
8 Used on redundant systems only.

Table 7-2. Running Wire List - Cont.

| Conductor No. | Conductor Aux. | FROM | TO |
|---|---|---|---|
| | | 17-706F05 | |
| | | UD5/105PS5J6 (P6) | UD5/105A15J1 (P1) |
| | | P6-55 | P1-55 |
| | | P6-56 | P1-56 |
| | | P6-57 | P1-57 |
| | | P6-58 | P1-58 |
| | | P6-59 | P1-59 |
| | | P6-60 | P1-60 |
| | | P6-61 | P1-61 |
| | | P6-62 | P1-62 |
| | | P6-63 | P1-63 |
| | | P6-64 | P1-64 |
| | | P6-65 | P1-65 |
| | | P6-66 | P1-66 |
| | | P6-67 | P1-67 |
| | | P6-68 | P1-68 |
| | | P6-69 | P1-69 |
| | | P6-70 | P1-70 |
| | | P6-71 | P1-71 |
| | | P6-72 | P1-72 |
| | | P6-73 | P1-73 |
| | | P6-74 | P1-74 |
| | | P6-75 | P1-75 |
| | | P6-76 | P1-76 |
| | | P6-77 | P1-77 |
| | | P6-78 | P1-78 |
| | | P6-79 | P1-79 |
| | | P6-80 | P1-80 |
| | | P6-81 | P1-81 |

1 Site dependent.
2 Used for testing only. Disconnected when not in use.
3 Supplied by vendor.
4 Adapters.
5 Wires tied back and insulated.
6 FAA RMS.
7 Power Monitor Filter 2A1FL1/5FL2 and/or 2A1FL2/105FL2 installed.
8 Used on redundant systems only.

Table 7-2. Running Wire List - Cont.

| Conductor No. | Conductor Aux. | FROM | TO |
|---|---|---|---|
| | | 17-706F05 | |
| | | UD5/105PS5J6 (P6) | UD5/105A15J1 (P1) |
| | | P6-82 | P1-82 |
| | | P6-83 | P1-83 |
| | | P6-84 | P1-84 |
| | | P6-85 | P1-85 |
| | | P6-86 | P1-86 |
| | | P6-87 | P1-87 |
| | | P6-88 | P1-88 |
| | | P6-89 | P1-89 |
| | | P6-90 | P1-90 |
| | | P6-91 | P1-91 |
| | | P6-92 | P1-92 |
| | | P6-93 | P1-93 |
| | | P6-94 | P1-94 |
| | | P6-95 | P1-95 |
| | | P6-96 | P1-96 |
| | | P6-97 | P1-97 |
| | | P6-98 | P1-98 |
| | | P6-99 | P1-99 |
| | | P6-100 | P1-100 |
| | | P6-101 | P1-101 |
| | | P6-102 | P1-102 |
| | | P6-103 | P1-103 |
| | | P6-104 | P1-104 |
| | | P6-105 | P1-105 |
| | | P6-106 | P1-106 |
| | | P6-107 | P1-107 |
| | | P6-108 | P1-108 |

1 Site dependent.
2 Used for testing only. Disconnected when not in use.
3 Supplied by vendor.
4 Adapters.
5 Wires tied back and insulated.
6 FAA RMS.
7 Power Monitor Filter 2A1FL1/5FL2 and/or 2A1FL2/105FL2 installed.
8 Used on redundant systems only.

Table 7-2. Running Wire List - Cont.

| Conductor No. | Conductor Aux. | FROM | TO |
|---|---|---|---|
| | | 17-706F05 | |
| | | UD5/105PS5J6 (P6) | UD5/105A15J1 (P1) |
| | | P6-109 | P1-109 |
| | | P6-1 10 | P1-1 10 |
| | | P6-1 11 | P1-1 11 |
| | | P6-1 12 | P1-1 12 |
| | | P6-1 13 | P1-1 13 |
| | | P6-1 14 | P1-1 14 |
| | | P6-1 15 | P1-1 15 |
| | | P6-1 16 | P1-1 16 |
| | | P6-1 17 | P1-1 17 |
| | | P6-1 18 | P1-1 18 |
| | | P6-1 19 | P1-1 19 |
| | | P6-120 | P1-120 |
| | | P6-121 | P1-121 |
| | | P6-122 | P1-122 |
| | | P6-123 | P1-123 |
| | | P6-124 | P1-124 |
| | | P6-125 | P1-125 |
| | | P6-126 | P1-126 |
| | | P6-127 | P1-127 |
| | | P6-128 | P1-128 |
| | | P6-129 | P1-129 |
| | | P6-130 | P1-130 |
| | | P6-131 | P1-131 |
| | | P6-132 | P1-132 |
| | | P6-133 | P1-133 |
| | | P6-134 | P1-134 |
| | | P6-135 | P1-135 |

1 Site dependent.
2 Used for testing only. Disconnected when not in use.
3 Supplied by vendor.
4 Adapters.
5 Wires tied back and insulated.
6 FAA RMS.
7 Power Monitor Filter 2A1FL1/5FL2 and/or 2A1FL2/105FL2 installed.
8 Used on redundant systems only.

Table 7-2. Running Wire List - Cont.

| Conductor No. | Conductor Aux. | FROM | TO |
|---|---|---|---|
| | | 17-706F05 | |
| | | UD5/105PS5J6 (P6) | UD5/105A15J1 (P1) |
| | | P6-136 | P1-136 |
| | | P6-137 | P1-137 |
| | | P6-138 | P1-138 |
| | | P6-139 | P1-139 |
| | | P6-140 | P1-140 |
| | | P6-141 | P1-141 |
| | | P6-142 | P1-142 |
| | | P6-143 | P1-143 |
| | | P6-144 | P1-144 |
| | | P6-145 | P1-145 |
| | | P6-146 | P1-146 |
| | | P6-147 | P1-147 |
| | | P6-148 | P1-148 |
| | | P6-149 | P1-149 |
| | | P6-150 | P1-150 |
| | | P6-151 | P1-151 |
| | | P6-152 | P1-152 |
| | | P6-153 | P1-153 |
| | | P6-154 | P1-154 |
| | | P6-155 | P1-155 |
| | | P6-156 | P1-156 |
| | | P6-157 | P1-157 |
| | | P6-158 | P1-158 |
| | | P6-159 | P1-159 |
| | | P6-160 | P1-160 |
| | | P6-161 | P1-161 |
| | | P6-162 | P1-162 |

1 Site dependent.
2 Used for testing only. Disconnected when not in use.
3 Supplied by vendor.
4 Adapters.
5 Wires tied back and insulated.
6 FAA RMS.
7 Power Monitor Filter 2A1FL1/5FL2 and/or 2A1FL2/105FL2 installed.
8 Used on redundant systems only.

Table 7-2. Running Wire List - Cont.

| Conductor No. | Conductor Aux. | FROM | TO |
|---|---|---|---|
| | | 17-706F05 | |
| | | UD5/105PS5J6 (P6) | UD5/105A15J1 (P1) |
| | | P6-163 | P1-163 |
| | | P6-164 | P1-164 |
| | | P6-165 | P1-165 |
| | | P6-166 | P1-166 |
| | | P6-167 | P1-167 |
| | | P6-168 | P1-168 |
| | | P6-169 | P1-169 |
| | | P6-170 | P1-170 |
| | | P6-171 | P1-171 |
| | | P6-172 | P1-172 |
| | | P6-173 | P1-173 |
| | | P6-174 | P1-174 |
| | | P6-175 | P1-175 |
| | | P6-176 | P1-176 |
| | | P6-177 | P1-177 |
| | | P6-178 | P1-178 |
| | | P6-179 | P1-179 |
| | | P6-180 | P1-180 |
| | | P6-181 | P1-181 |
| | | P6-182 | P1-182 |
| | | P6-183 | P1-183 |
| | | P6-184 | P1-184 |
| | | P6-185 | P1-185 |
| | | P6-186 | P1-186 |
| | | P6-187 | P1-187 |
| | | P6-188 | P1-188 |
| | | P6-189 | P1-189 |

1 Site dependent.
2 Used for testing only. Disconnected when not in use.
3 Supplied by vendor.
4 Adapters.
5 Wires tied back and insulated.
6 FAA RMS.
7 Power Monitor Filter 2A1FL1/5FL2 and/or 2A1FL2/105FL2 installed.
8 Used on redundant systems only.

Table 7-2. Running Wire List - Cont.

| Conductor No. | Conductor Aux. | FROM | TO |
|---|---|---|---|
| | | 17-706F05 | |
| | | UD5/105PS5J6 (P6) | UD5/105A15J1 (P1) |
| | | P6-190 | P1-190 |
| | | P6-191 | P1-191 |
| | | P6-192 | P1-192 |
| | | P6-193 | P1-193 |
| | | P6-194 | P1-194 |
| | | P6-195 | P1-195 |
| | | P6-196 | P1-196 |
| | | P6-197 | P1-197 |
| | | P6-198 | P1-198 |
| | | P6-199 | P1-199 |
| | | P6-200 | P1-200 |
| | | P6-201 | P1-201 |
| | | P6-202 | P1-202 |
| | | P6-203 | P1-203 |
| | | P6-204 | P1-204 |
| | | P6-205 | P1-205 |
| | | P6-206 | P1-206 |
| | | P6-207 | P1-207 |
| | | P6-208 | P1-208 |
| | | P6-209 | P1-209 |
| | | P6-210 | P1-210 |
| | | P6-21 1 | P1-21 1 |
| | | P6-212 | P1-212 |
| | | P6-213 | P1-213 |
| | | P6-214 | P1-214 |
| | | P6-215 | P1-215 |
| | | P6-216 | P1-216 |

1 Site dependent.
2 Used for testing only. Disconnected when not in use.
3 Supplied by vendor.
4 Adapters.
5 Wires tied back and insulated.
6 FAA RMS.
7 Power Monitor Filter 2A1FL1/5FL2 and/or 2A1FL2/105FL2 installed.
8 Used on redundant systems only.

Table 7-2. Running Wire List - Cont.

| Conductor No. | Conductor Aux. | FROM | TO |
|---|---|---|---|
| | | 17-706F05 | |
| | | UD5/105PS5J6 (P6) | UD5/105A15J1 (P1) |
| | | P6-217 | P1-217 |
| | | P6-218 | P1-218 |
| | | P6-219 | P1-219 |
| | | 17-709 | |
| | | UD5/105A12AT1 CONN3 (P1) | UD5/105PS5J5 (P2) |
| | | P1-100 | P2-100 |
| | | P1-200 | P2-200 |
| | | P1-101 | P2-101 |
| | | P1-201 | P2-201 |
| | | P1-102 | P2-102 |
| | | P1-202 | P2-202 |
| | | P1-103 | P2-103 |
| | | P1-203 | P2-203 |
| | | P1-104 | P2-104 |
| | | P1-204 | P2-204 |
| | | P1-105 | P2-105 |
| | | P1-205 | P2-205 |
| | | P1-106 | P2-106 |
| | | P1-206 | P2-206 |
| | | P1-107 | P2-107 |
| | | P1-207 | P2-207 |
| | | P1-108 | P2-108 |
| | | P1-208 | P2-208 |
| | | P1-109 | P2-109 |
| | | P1-209 | P2-209 |

1 Site dependent.
2 Used for testing only. Disconnected when not in use.
3 Supplied by vendor.
4 Adapters.
5 Wires tied back and insulated.
6 FAA RMS.
7 Power Monitor Filter 2A1FL1/5FL2 and/or 2A1FL2/105FL2 installed.
8 Used on redundant systems only.

Table 7-2. Running Wire List - Cont.

| Conductor No. | Conductor Aux. | FROM | | TO |
|---|---|---|---|---|
| | | | 17-783 [1] | |
| | | UD5/105A5 (P2) | | UD5/105A14J2 (P1) |
| | | P2-LINE | | P1-L |
| | | P2-NEUTRAL | | P1-N |
| | | P2-GND | | P1-E |
| | | | 17-783 [1] | |
| | | UD5/105A5 (P2) | | UD5/105J31 |
| | | P2-LINE | | J31-L |
| | | P2-NORMAL | | J31-N |
| | | P2-GND | | J31-E |
| | | | 17-786 | |
| | | UD5/105PS5J7 | | UD5/105A12A19 CONN2 (J1) UD5/105A16J1 (J2) |
| | | | 17-835R01 | |
| | | UD5/105A5 GND | | UD5/105 GND |
| | | | 17-852F02 | |
| | | UD5/105A12A19 CONN3 | | UD5/105A16J2 UD5/105A16J4 |
| | | UD5/105A12A19 CONN4 | | UD5/105A16J8 UD5/105A16J9 |
| | | UD5/105A12A19 CONN5 | | UD5/105A16J10 UD5/105A16J11 |
| | | J1-100 | | J2-100 |
| | | J1-200 | | J2-200 |
| | | J1-101 | | J2-101 |
| | | J1-201 | | J2-201 |
| | | J1-102 | | J2-102 |
| | | J1-202 | | J2-202 |

1 Site dependent.
2 Used for testing only. Disconnected when not in use.
3 Supplied by vendor.
4 Adapters.
5 Wires tied back and insulated.
6 FAA RMS.
7 Power Monitor Filter 2A1FL1/5FL2 and/or 2A1FL2/105FL2 installed.
8 Used on redundant systems only.

Table 7-2. Running Wire List - Cont.

| Conductor No. | Conductor Aux. | FROM | TO |
|---|---|---|---|
| | | 17-852F02 | |
| | | UD5/105A12A19 CONN3 | UD5/105A16J2 UD5/105A16J4 |
| | | UD5/105A12A19 CONN4 | UD5/105A16J8 UD5/105A16J9 |
| | | UD5/105A12A19 CONN5 | UD5/105A16J10 UD5/105A16J11 |
| | | J1-103 | J2-103 |
| | | J1-203 | J2-203 |
| | | J1-104 | J2-104 |
| | | J1-204 | J2-204 |
| | | J1-105 | J2-105 |
| | | J1-205 | J2-205 |
| | | J1-106 | J2-106 |
| | | J1-206 | J2-206 |
| | | J1-107 | J2-107 |
| | | J1-207 | J2-207 |
| | | J1-108 | J2-108 |
| | | J1-208 | J2-208 |
| | | J1-109 | J2-109 |
| | | J1-209 | J2-209 |
| | | J1-1 10 | J2-1 10 |
| | | J1-210 | J2-210 |
| | | J1-1 11 | J2-1 11 |
| | | J1-21 1 | J2-21 1 |
| | | J1-1 12 | J2-1 12 |
| | | J1-212 | J2-212 |
| | | J1-1 13 | J2-1 13 |
| | | J1-213 | J2-213 |
| | | J1-1 14 | J2-1 14 |

1 Site dependent.
2 Used for testing only. Disconnected when not in use.
3 Supplied by vendor.
4 Adapters.
5 Wires tied back and insulated.
6 FAA RMS.
7 Power Monitor Filter 2A1FL1/5FL2 and/or 2A1FL2/105FL2 installed.
8 Used on redundant systems only.

Table 7-2. Running Wire List - Cont.

| Conductor No. | Conductor Aux. | FROM | TO |
|---|---|---|---|
| | | 17-852F02 | |
| | | UD5/105A12A19 CONN3 | UD5/105A16J2 UD5/105A16J4 |
| | | UD5/105A12A19 CONN4 | UD5/105A16J8 UD5/105A16J9 |
| | | UD5/105A12A19 CONN5 | UD5/105A16J10 UD5/105A16J11 |
| | | J1-214 | J2-214 |
| | | J1-1 15 | J2-1 15 |
| | | J1-215 | J2-215 |
| | | J1-1 16 | J2-1 16 |
| | | J1-216 | J2-216 |
| | | J1-1 17 | J2-1 17 |
| | | J1-217 | J2-217 |
| | | J1-1 18 | J2-1 18 |
| | | J1-218 | J2-218 |
| | | J1-1 19 | J2-1 19 |
| | | J1-219 | J2-219 |
| | | 17-926F02 [1] | |
| | | UD5/105A13A1 CONN4 (P1) | UD5/105A5(P2) |
| | | P1-100 | P2-100 |
| | | P1-200 | P2-200 |
| | | P1-101 | P2-101 |
| | | P1-201 | P2-201 |
| | | P1-102 | P2-102 |
| | | P1-202 | P2-202 |
| | | P1-103 | P2-103 |
| | | P1-203 | P2-203 |
| | | P1-104 | P2-104 |

1 Site dependent.
2 Used for testing only. Disconnected when not in use.
3 Supplied by vendor.
4 Adapters.
5 Wires tied back and insulated.
6 FAA RMS.
7 Power Monitor Filter 2A1FL1/5FL2 and/or 2A1FL2/105FL2 installed.
8 Used on redundant systems only.

Table 7-2. Running Wire List - Cont.

| Conductor No. | Conductor Aux. | FROM | TO |
|---|---|---|---|
| | | 17-926F02 [1] | |
| | | UD5/105A13A1 CONN4 (P1) | UD5/105A5(P2) |
| | | P1-204 | P2-204 |
| | | P1-105 | P2-105 |
| | | P1-205 | P2-205 |
| | | P1-106 | P2-106 |
| | | P1-206 | P2-206 |
| | | P1-107 | P2-107 |
| | | P1-207 | P2-207 |
| | | P1-108 | P2-108 |
| | | P1-208 | P2-208 |
| | | P1-109 | P2-109 |
| | | P1-209 | P2-209 |
| | | P1-1 10 | P2-1 10 |
| | | P1-210 | P2-210 |
| | | P1-1 11 | P2-1 11 |
| | | P1-21 1 | P2-21 1 |
| | | P1-1 12 | P2-1 12 |
| | | P1-212 | P2-212 |
| | | P1-1 13 | P2-1 13 |
| | | P1-213 | P2-213 |
| | | P1-1 14 | P2-1 14 |
| | | P1-214 | P2-214 |
| | | P1-1 15 | P2-1 15 |
| | | P1-215 | P2-215 |
| | | P1-1 16 | P2-1 16 |
| | | P1-216 | P2-216 |
| | | P1-1 17 | P2-1 17 |

1 Site dependent.
2 Used for testing only. Disconnected when not in use.
3 Supplied by vendor.
4 Adapters.
5 Wires tied back and insulated.
6 FAA RMS.
7 Power Monitor Filter 2A1FL1/5FL2 and/or 2A1FL2/105FL2 installed.
8 Used on redundant systems only.

Table 7-2. Running Wire List - Cont.

| Conductor No. | Conductor Aux. | FROM | TO |
|---|---|---|---|
| | | 17-926F02 [1] | |
| | | UD5/105A13A1 CONN4 (P1) | UD5/105A5(P2) |
| | | P1-217 | P2-217 |
| | | P1-1 18 | P2-1 18 |
| | | P1-218 | P2-218 |
| | | P1-1 19 | P2-1 19 |
| | | P1-219 | P2-219 |
| | | P1-120 | P2-120 |
| | | P1-220 | P2-220 |
| | | P1-121 | P2-121 |
| | | P1-221 | P2-221 |
| | | P1-122 | P2-122 |
| | | P1-222 | P2-222 |
| | | P1-123 | P2-123 |
| | | P1-223 | P2-223 |
| | | P1-124 | P2-124 |
| | | P1-224 | P2-224 |
| | | 17-926F02 [1] | |
| | | UD5/105A12A13 CONN4 (P1) | UD5/105A5 (P2) |
| | | P1-100 | P2-100 |
| | | P1-200 | P2-200 |
| | | P1-101 | P2-101 |
| | | P1-201 | P2-201 |
| | | P1-102 | P2-102 |
| | | P1-202 | P2-202 |
| | | P1-103 | P2-103 |
| | | P1-203 | P2-203 |

1 Site dependent.
2 Used for testing only. Disconnected when not in use.
3 Supplied by vendor.
4 Adapters.
5 Wires tied back and insulated.
6 FAA RMS.
7 Power Monitor Filter 2A1FL1/5FL2 and/or 2A1FL2/105FL2 installed.
8 Used on redundant systems only.

Table 7-2. Running Wire List - Cont.

| Conductor No. | Conductor Aux. | FROM | TO |
|---|---|---|---|
| | | 17-926F02 [1] | |
| | | UD5/105A12A13 CONN4 (P1) | UD5/105A5 (P2) |
| | | P1-104 | P2-104 |
| | | P1-204 | P2-204 |
| | | P1-105 | P2-105 |
| | | P1-205 | P2-205 |
| | | P1-106 | P2-106 |
| | | P1-206 | P2-206 |
| | | P1-107 | P2-107 |
| | | P1-207 | P2-207 |
| | | P1-108 | P2-108 |
| | | P1-208 | P2-208 |
| | | P1-109 | P2-109 |
| | | P1-209 | P2-209 |
| | | P1-1 10 | P2-1 10 |
| | | P1-210 | P2-210 |
| | | P1-1 11 | P2-1 11 |
| | | P1-21 1 | P2-21 1 |
| | | P1-1 12 | P2-1 12 |
| | | P1-212 | P2-212 |
| | | P1-1 13 | P2-1 13 |
| | | P1-213 | P2-213 |
| | | P1-1 14 | P2-1 14 |
| | | P1-214 | P2-214 |
| | | P1-1 15 | P2-1 15 |
| | | P1-215 | P2-215 |
| | | P1-1 16 | P2-1 16 |
| | | P1-216 | P2-216 |

1 Site dependent.
2 Used for testing only. Disconnected when not in use.
3 Supplied by vendor.
4 Adapters.
5 Wires tied back and insulated.
6 FAA RMS.
7 Power Monitor Filter 2A1FL1/5FL2 and/or 2A1FL2/105FL2 installed.
8 Used on redundant systems only.

Table 7-2. Running Wire List - Cont.

| Conductor No. | Conductor Aux. | FROM | TO |
|---|---|---|---|
| | | 17-926F02 [1] | |
| | | UD5/105A12A13 CONN4 (P1) | UD5/105A5 (P2) |
| | | P1-1 17 | P2-1 17 |
| | | P1-217 | P2-217 |
| | | P1-1 18 | P2-1 18 |
| | | P1-218 | P2-218 |
| | | P1-1 19 | P2-1 19 |
| | | P1-219 | P2-219 |
| | | P1-120 | P2-120 |
| | | P1-220 | P2-220 |
| | | P1-121 | P2-121 |
| | | P1-221 | P2-221 |
| | | P1-122 | P2-122 |
| | | P1-222 | P2-222 |
| | | P1-123 | P2-123 |
| | | P1-223 | P2-223 |
| | | P1-124 | P2-124 |
| | | P1-224 | P2-224 |
| | | 17-983F01 | |
| | | UD5/105A12P5/P5U BUSBAR | UD5PS5J8 |
| | | 17-989F02 | |
| | | UD5/105A12J3 (P1) | UD5/105A1205B TOP (P2) |
| | | P1-100 | P2-100 |
| | | P1-200 | P2-200 |
| | | P1-101 | P2-101 |
| | | P1-201 | P2-201 |

1 Site dependent.
2 Used for testing only. Disconnected when not in use.
3 Supplied by vendor.
4 Adapters.
5 Wires tied back and insulated.
6 FAA RMS.
7 Power Monitor Filter 2A1FL1/5FL2 and/or 2A1FL2/105FL2 installed.
8 Used on redundant systems only.

Table 7-2. Running Wire List - Cont.

| Conductor No. | Conductor Aux. | FROM | TO |
|---|---|---|---|
| | | 17-989F02 | |
| | | UD5/105A12J3 (P1) | UD5/105A1205B TOP (P2) |
| | | P1-102 | P2-102 |
| | | P1-202 | P2-202 |
| | | P1-103 | P2-103 |
| | | P1-203 | P2-203 |
| | | P1-104 | P2-104 |
| | | P1-204 | P2-204 |
| | | P1-105 | P2-105 |
| | | P1-205 | P2-205 |
| | | P1-106 | P2-106 |
| | | P1-206 | P2-206 |
| | | P1-107 | P2-107 |
| | | P1-207 | P2-207 |
| | | P1-108 | P2-108 |
| | | P1-208 | P2-208 |
| | | P1-109 | P2-109 |
| | | P1-209 | P2-209 |
| | | P1-1 10 | P2-1 10 |
| | | P1-210 | P2-210 |
| | | P1-1 11 | P2-1 11 |
| | | P1-21 1 | P2-21 1 |
| | | P1-1 12 | P2-1 12 |
| | | P1-212 | P2-212 |
| | | P1-1 13 | P2-1 13 |
| | | P1-213 | P2-213 |
| | | P1-1 14 | P2-1 14 |
| | | P1-214 | P2-214 |

1 Site dependent.
2 Used for testing only. Disconnected when not in use.
3 Supplied by vendor.
4 Adapters.
5 Wires tied back and insulated.
6 FAA RMS.
7 Power Monitor Filter 2A1FL1/5FL2 and/or 2A1FL2/105FL2 installed.
8 Used on redundant systems only.

Table 7-2. Running Wire List - Cont.

| Conductor No. | Conductor Aux. | FROM | TO |
|---|---|---|---|
| | | 17-989F02 | |
| | | UD5/105A12J3 (P1) | UD5/105A1205B TOP (P2) |
| | | P1-1 15 | P2-1 15 |
| | | P1-215 | P2-215 |
| | | P1-1 16 | P2-1 16 |
| | | P1-216 | P2-216 |
| | | P1-1 17 | P2-1 17 |
| | | P1-217 | P2-217 |
| | | P1-1 18 | P2-1 18 |
| | | P1-218 | P2-218 |
| | | P1-1 19 | P2-1 19 |
| | | P1-219 | P2-219 |
| | | 17-989F04 | |
| | | UD5/105A12J5 (P1) | UD5/105A1205B BOT (P2) |
| | | P1-100 | P2-100 |
| | | P1-200 | P2-200 |
| | | P1-101 | P2-101 |
| | | P1-201 | P2-201 |
| | | P1-102 | P2-102 |
| | | P1-202 | P2-202 |
| | | P1-103 | P2-103 |
| | | P1-203 | P2-203 |
| | | P1-104 | P2-104 |
| | | P1-204 | P2-204 |
| | | P1-105 | P2-105 |
| | | P1-205 | P2-205 |
| | | P1-106 | P2-106 |

1 Site dependent.
2 Used for testing only. Disconnected when not in use.
3 Supplied by vendor.
4 Adapters.
5 Wires tied back and insulated.
6 FAA RMS.
7 Power Monitor Filter 2A1FL1/5FL2 and/or 2A1FL2/105FL2 installed.
8 Used on redundant systems only.

Table 7-2. Running Wire List - Cont.

| Conductor No. | Conductor Aux. | FROM | TO |
|---|---|---|---|
| | | 17-989F04 | |
| | | UD5/105A12J5 (P1) | UD5/105A1205B BOT (P2) |
| | | P1-206 | P2-206 |
| | | P1-107 | P2-107 |
| | | P1-207 | P2-207 |
| | | P1-108 | P2-108 |
| | | P1-208 | P2-208 |
| | | P1-109 | P2-109 |
| | | P1-209 | P2-209 |
| | | P1-1 10 | P2-1 10 |
| | | P1-210 | P2-210 |
| | | P1-1 11 | P2-1 11 |
| | | P1-21 1 | P2-21 1 |
| | | P1-1 12 | P2-1 12 |
| | | P1-212 | P2-212 |
| | | P1-1 13 | P2-1 13 |
| | | P1-213 | P2-213 |
| | | P1-1 14 | P2-1 14 |
| | | P1-214 | P2-214 |
| | | P1-1 15 | P2-1 15 |
| | | P1-215 | P2-215 |
| | | P1-1 16 | P2-1 16 |
| | | P1-216 | P2-216 |
| | | P1-1 17 | P2-1 17 |
| | | P1-217 | P2-217 |
| | | P1-1 18 | P2-1 18 |
| | | P1-218 | P2-218 |
| | | P1-1 19 | P2-1 19 |

1 Site dependent.
2 Used for testing only. Disconnected when not in use.
3 Supplied by vendor.
4 Adapters.
5 Wires tied back and insulated.
6 FAA RMS.
7 Power Monitor Filter 2A1FL1/5FL2 and/or 2A1FL2/105FL2 installed.
8 Used on redundant systems only.

Table 7-2. Running Wire List - Cont.

| Conductor No. | Aux. | FROM | TO |
|---|---|---|---|
| | | 17-989F04 | |
| | | UD5/105A12J5 (P1) | UD5/105A1205B BOT (P2) |
| | | P1-219 | P2-219 |
| | | 17-989F07 | |
| | | UD5/105A12A5 CONN3 (P1) | UD5/105A12J2 (P2) |
| | | P1-100 | P2-100 |
| | | P1-200 | P2-200 |
| | | P1-101 | P2-101 |
| | | P1-201 | P2-201 |
| | | P1-102 | P2-102 |
| | | P1-202 | P2-202 |
| | | P1-103 | P2-103 |
| | | P1-203 | P2-203 |
| | | P1-104 | P2-104 |
| | | P1-204 | P2-204 |
| | | P1-105 | P2-105 |
| | | P1-205 | P2-205 |
| | | P1-106 | P2-106 |
| | | P1-206 | P2-206 |
| | | P1-107 | P2-107 |
| | | P1-207 | P2-207 |
| | | P1-108 | P2-108 |
| | | P1-208 | P2-208 |
| | | P1-109 | P2-109 |
| | | P1-209 | P2-209 |
| | | P1-1 10 | P2-1 10 |
| | | P1-210 | P2-210 |

1 Site dependent.
2 Used for testing only. Disconnected when not in use.
3 Supplied by vendor.
4 Adapters.
5 Wires tied back and insulated.
6 FAA RMS.
7 Power Monitor Filter 2A1FL1/5FL2 and/or 2A1FL2/105FL2 installed.
8 Used on redundant systems only.

Table 7-2. Running Wire List - Cont.

| Conductor No. | Aux. | FROM | | TO |
|---|---|---|---|---|
| | | | 17-989F07 | |
| | | UD5/105A12A5 CONN3 (P1) | | UD5/105A12J2 (P2) |
| | | P1-1 11 | | P2-1 11 |
| | | P1-21 1 | | P2-21 1 |
| | | P1-1 12 | | P2-1 12 |
| | | P1-212 | | P2-212 |
| | | P1-1 13 | | P2-1 13 |
| | | P1-213 | | P2-213 |
| | | P1-1 14 | | P2-1 14 |
| | | P1-214 | | P2-214 |
| | | P1-1 15 | | P2-1 15 |
| | | P1-215 | | P2-215 |
| | | P1-1 16 | | P2-1 16 |
| | | P1-216 | | P2-216 |
| | | P1-1 17 | | P2-1 17 |
| | | P1-217 | | P2-217 |
| | | P1-1 18 | | P2-1 18 |
| | | P1-218 | | P2-218 |
| | | P1-1 19 | | P2-1 19 |
| | | P1-219 | | P2-219 |
| | | | 95-517 | |
| | | UD5/105A12P5/P5U BUSBAR | | UD5/105PS5J8 |
| | | | 95-579 | |
| | | UD5/105A8 | | UD5/105A14J9 |
| | | | 95-560F05 | |
| | | UD5/105A12P5 BUSBAR | | UD5/105PS5P5 BUSBAR |

1 Site dependent.
2 Used for testing only. Disconnected when not in use.
3 Supplied by vendor.
4 Adapters.
5 Wires tied back and insulated.
6 FAA RMS.
7 Power Monitor Filter 2A1FL1/5FL2 and/or 2A1FL2/105FL2 installed.
8 Used on redundant systems only.

Table 7-2. Running Wire List - Cont.

| Conductor No. | Aux. | FROM | | TO |
|---|---|---|---|---|
| | | | 95-560F06 | |
| | | UD5/105A12P5 BUSBAR | | UD5/105PS5P5 BUSBAR |
| | | | 95-560F07 | |
| | | UD5/105A12GNDP5U BUSBAR | | UD5/105PS5GNDP5U BUSBAR |
| | | | 95-560F08 | |
| | | UD5/105A12GND BUSBAR | | UD5/105PS5GND BUSBAR |
| | | | 95-560F09 | |
| | | UD5/105A12P5UGND BUSBAR | | UD5/105PS5P5UGND BUSBAR |
| | | | 95-579 | |
| | | UD5/105J31 | | UD5/105A8 (P2) |
| 1 | | J31-1 | | P2-3 |
| 2 | | J31-2 | | P2-2 |
| 3 | | J31-3 | | P31-4 |
| | | | 95-628 | |
| | | UD5/105A12A12 CONN4 | | UD5/105A5 |
| | | P1-100 | | P2-100 |
| | | P1-200 | | P2-200 |
| | | P1-101 | | P2-101 |
| | | P1-201 | | P2-201 |
| | | P1-102 | | P2-102 |
| | | P1-202 | | P2-202 |
| | | P1-103 | | P2-103 |
| | | P1-203 | | P2-203 |
| | | P1-104 | | P2-104 |

1 Site dependent.
2 Used for testing only. Disconnected when not in use.
3 Supplied by vendor.
4 Adapters.
5 Wires tied back and insulated.
6 FAA RMS.
7 Power Monitor Filter 2A1FL1/5FL2 and/or 2A1FL2/105FL2 installed.
8 Used on redundant systems only.

Table 7-2. Running Wire List - Cont.

| Conductor No. | Conductor Aux. | FROM | TO |
|---|---|---|---|
| | | 95-628 | |
| | | UD5/105A12A12 CONN4 | UD5/105A5 |
| | | P1-204 | P2-204 |
| | | P1-105 | P2-105 |
| | | P1-205 | P2-205 |
| | | P1-106 | P2-106 |
| | | P1-206 | P2-206 |
| | | P1-107 | P2-107 |
| | | P1-207 | P2-207 |
| | | P1-108 | P2-108 |
| | | P1-208 | P2-208 |
| | | P1-109 | P2-109 |
| | | P1-209 | P2-209 |
| | | P1-1 10 | P2-1 10 |
| | | P1-210 | P2-210 |
| | | P1-1 11 | P2-1 11 |
| | | P1-21 1 | P2-21 1 |
| | | P1-1 12 | P2-1 12 |
| | | P1-212 | P2-212 |
| | | P1-1 13 | P2-1 13 |
| | | P1-213 | P2-213 |
| | | P1-1 14 | P2-1 14 |
| | | P1-214 | P2-214 |
| | | P1-1 15 | P2-1 15 |
| | | P1-215 | P2-215 |
| | | P1-1 16 | P2-1 16 |
| | | P1-216 | P2-216 |
| | | P1-1 17 | P2-1 17 |

1 Site dependent.
2 Used for testing only. Disconnected when not in use.
3 Supplied by vendor.
4 Adapters.
5 Wires tied back and insulated.
6 FAA RMS.
7 Power Monitor Filter 2A1FL1/5FL2 and/or 2A1FL2/105FL2 installed.
8 Used on redundant systems only.

Table 7-2. Running Wire List - Cont.

| Conductor No. | Conductor Aux. | FROM | TO |
|---|---|---|---|
| | | 95-628 | |
| | | UD5/105A12A12 CONN4 | UD5/105A5 |
| | | P1-217 | P2-217 |
| | | P1-1 18 | P2-1 18 |
| | | P1-218 | P2-218 |
| | | P1-1 19 | P2-1 19 |
| | | P1-219 | P2-219 |
| | | P1-120 | P2-120 |
| | | P1-220 | P2-220 |
| | | P1-121 | P2-121 |
| | | P1-221 | P2-221 |
| | | P1-122 | P2-122 |
| | | P1-222 | P2-222 |
| | | P1-123 | P2-123 |
| | | P1-223 | P2-223 |
| | | P1-124 | P2-124 |
| | | P1-224 | P2-224 |
| | | 95-636 | |
| | | UD5/105A16J14 (P1) | UD5/105A15J16 (P16) |
| 1 | | P1-1 | P16-1 |
| 2 | | P1-9 | P16-9 |
| 3 | | P1-2 | P16-2 |
| 4 | | P1-1 0 | P16-1 0 |
| 5 | | P1-3 | P16-3 |
| 6 | | P1-1 1 | P16-1 1 |
| 7 | | P1-4 | P16-4 |
| 8 | | P1-12 | P16-12 |
| 9 | | P1-5 | P16-5 |

1 Site dependent.
2 Used for testing only. Disconnected when not in use.
3 Supplied by vendor.
4 Adapters.
5 Wires tied back and insulated.
6 FAA RMS.
7 Power Monitor Filter 2A1FL1/5FL2 and/or 2A1FL2/105FL2 installed.
8 Used on redundant systems only.

Table 7-2. Running Wire List - Cont.

| Conductor No. | Conductor Aux. | FROM | TO |
|---|---|---|---|
| | | 95-636 | |
| | | UD5/105A16J14 (P1) | UD5/105A15J16 (P16) |
| 10 | | P1-13 | P16-13 |
| 11 | | P1-6 | P16-6 |
| 12 | | P1-14 | P16-14 |
| 13 | | P1-7 | P16-7 |
| 14 | | P1-15 | P16-15 |
| 15 | | P1-8 | P16-8 |
| | | 95-636 | |
| | | UD5/105A16J0 (P1) | UD5/105A15J17 (P17) |
| 1 | | P1-1 | P16-1 |
| 2 | | P1-9 | P16-9 |
| 3 | | P1-2 | P16-2 |
| 4 | | P1-1 0 | P16-1 0 |
| 5 | | P1-3 | P16-3 |
| 6 | | P1-1 1 | P16-1 1 |
| 7 | | P1-4 | P16-4 |
| 8 | | P1-12 | P16-12 |
| 9 | | P1-5 | P16-5 |
| 10 | | P1-13 | P16-13 |
| 11 | | P1-6 | P16-6 |
| 12 | | P1-14 | P16-14 |
| 13 | | P1-7 | P16-7 |
| 14 | | P1-15 | P16-15 |
| 15 | | P1-8 | P16-8 |
| | | 95-791 | |
| | | UD5/105PS5A1 | UD5/105A14J5 |

1 Site dependent.
2 Used for testing only. Disconnected when not in use.
3 Supplied by vendor.
4 Adapters.
5 Wires tied back and insulated.
6 FAA RMS.
7 Power Monitor Filter 2A1FL1/5FL2 and/or 2A1FL2/105FL2 installed.
8 Used on redundant systems only.

Table 7-2. Running Wire List - Cont.

| Conductor No. | Conductor Aux. | FROM | TO |
|---|---|---|---|
| | | 95-795 | |
| | | UD5/105A12A20A2 CONN A | UD5/105PS5J9 (P9) |
| | | CONN A-124 | P9-1 |
| | | CONN A-223 | P9-4 |
| | | CONN A-122 | CONN A-224 |
| | | CONN A-224 | CONN A-122 |
| | | 1217696-301 | |
| 1 | | PS1-GND | PS1(V-) |
| 2 | | PS1(V-) | PS3(-OUT) |
| 3 | | PS3(-OUT) | PS2(-RTN) |
| 4 | | PS2(-RTN) | PS2(+RTN) |
| 5 | | PS1-GND | PS3(TB1-3) |
| 6 | | PS3(TB1-3) | PS2(TB1-3) |
| 7 | | PS1-N2 | PS3(TB1-2) |
| 8 | | PS3(TB1-2) | PS2(TB1-2) |
| 9 | | PS1-L1 | PS3(TB1-1) |
| 10 | | PS3(TB1-1) | PS2(TB1-1) |
| | | 1221867-301 | |
| | | UD5/105B2 | UD5/105B3 UD5/105B4 |
| | | 1223871 | |
| | | UD5PS___ | UD5PS___ |
| 1 | | PS1-GND | PS1 (V-) |
| 2 | | PS1 (V-) | PS3 (-OUT) |
| 3 | | PS3 (-OUT) | PS2 (-RTN) |
| 4 | | PS2 (-RTN) | PS2 (+RTN) |

1 Site dependent.
2 Used for testing only. Disconnected when not in use.
3 Supplied by vendor.
4 Adapters.
5 Wires tied back and insulated.
6 FAA RMS.
7 Power Monitor Filter 2A1FL1/5FL2 and/or 2A1FL2/105FL2 installed.
8 Used on redundant systems only.

Table 7-2. Running Wire List - Cont.

| Conductor No. | Conductor Aux. | FROM | TO |
|---|---|---|---|
| | | 1223871 | |
| | | UD5PS___ | UD5PS___ |
| 5 | | PS1-GND | PS3 (TB1-3) |
| 6 | | PS3 (TB1-3) | PS2 (TB1-3) |
| 7 | | PS1-N2 | PS3 (TB1-2) |
| 8 | | PS3 (TB1-2) | PS2 (TB1-2) |
| 9 | | PS1-L1 | PS2 (TB1-1) |
| 10 | | XK1-X1 | PS2 (TB1-1) |
| 11 | | XK1-A2 | PS2 (TB1-1) |
| 12 | | XK1-A1 | PS3 (TB1-1) |
| 13 | | PS2 (TB1-2) | XK1-X2 |
| 14 | | PS3 (+OUT) | XK1-B2 |
| 15 | | XK1-B3 | R1-1 |
| 16 | | PS3 (-OUT) | R1-2 |
| | | 320226 | |
| | | UD5A12A18J1 | UD5A1A1J1 |
| | | 34636-1102-101 | |
| | | UD5A7J2(P1) | UD5A6J3(P2) |
| | | P1-U | P2-U |
| | | P1-J | P2-J |
| | | P1-B | P2-B |
| | | P1-E | P2-E |
| | | P1-C | P2-C |
| | | P1-V | P2-V |
| | | P1-F | P2-F |
| | | P1-G | P2-G |
| | | P1-H | P2-H |
| | | P1-T | P2-T |

1 Site dependent.
2 Used for testing only. Disconnected when not in use.
3 Supplied by vendor.
4 Adapters.
5 Wires tied back and insulated.
6 FAA RMS.
7 Power Monitor Filter 2A1FL1/5FL2 and/or 2A1FL2/105FL2 installed.
8 Used on redundant systems only.

Table 7-2. Running Wire List - Cont.

| Conductor No. | Conductor Aux. | FROM | | TO |
|---|---|---|---|---|
| | | | 34636-1102-101 | |
| | | UD5A7J2(P1) | | UD5A6J3(P2) |
| | | P1-D | | P2-D |
| | | P1-I | | P2-I |
| | | P1-A | | P2-A |
| | | P1-W | | P2-W |
| | | P1-X | | P2-X |
| | | P1-Y | | P2-Y |
| | | P1-Z | | P2-Z |
| | | P1-M | | P2-M |
| | | P1-N | | P2-N |
| | | P1-O | | P2-O |
| | | P1-P | | P2-P |
| | | P1-R | | P2-R |
| | | P1-L | | P2-L |
| | | P1-K | | P2-K |
| | | | 70/170W900 | |
| | | UD70/170J16 (P1) | (FAA RMS) | UD70/170A37J1 (P2) |
| 1 | 1 | NC | | NC |
| 1 | 2 | P1-4 | | P2-4 |
| 1 | SHLD | P1-3 | | P2-3 |
| 2 | 1 | P1-11 | | P2-11 |
| 2 | 2 | P1-12 | | P2-12 |
| 2 | SHLD | P1-10 | | P2-10 |
| 3 | 1 | P1-2 | | P2-2 |
| 3 | 2 | NC | | NC |
| 3 | SHLD | P1-5 | | P2-5 |
| 4 | 1 | NC | | NC |
| 4 | 2 | P1-1 | | P2-1 |

[1] Site dependent.
[2] Used for testing only. Disconnected when not in use.
[3] Supplied by vendor.
[4] Adapters.
[5] Wires tied back and insulated.
[6] FAA RMS.
[7] Power Monitor Filter 2A1FL1/5FL2 and/or 2A1FL2/105FL2 installed.
[8] Used on redundant systems only.

Table 7-2. Running Wire List - Cont.

| Conductor No. | Conductor Aux. | FROM | | TO |
|---|---|---|---|---|
| | | UD70/170J16 (P1) | 70/170W900 (FAA RMS) | UD70/170A37J1 (P2) |
| 4 | SHLD | P1-6 | | P2-6 |
| 5 | 1 | P1-7 | | P2-7 |
| 5 | 2 | P1-9 | | P2-9 |
| 5 | SHLD | P1-8 | | P2-8 |
| 6 | 1 | P1-13 | | P2-13 |
| 6 | 2 | P1-14 | | P2-14 |
| 6 | SHLD | P1-15 | | P2-15 |

[1] Site dependent.
[2] Used for testing only. Disconnected when not in use.
[3] Supplied by vendor.
[4] Adapters.
[5] Wires tied back and insulated.
[6] FAA RMS.
[7] Power Monitor Filter 2A1FL1/5FL2 and/or 2A1FL2/105FL2 installed.
[8] Used on redundant systems only.

# Section 7-3. Power Distribution Diagrams (PDDs)

## 7-3.1 GENERAL.

This section provides a set of Power Distribution Diagrams in schematic format for use in troubleshooting power distribution problems. The following figures are provided:

- Figure FO7-13 RDA Receiver Cabinet UD4, Power Distribution Diagram (5 sheets)
- Figure FO7-14 RDA Data Processor Cabinet UD5, Power Distribution Diagram (9 sheets)
- Figure FO7-15 NWS Remote Power Shutdown
- Figure FO7-15 NWS Redundant Configuration Remote Power Shutdown (2 sheets)

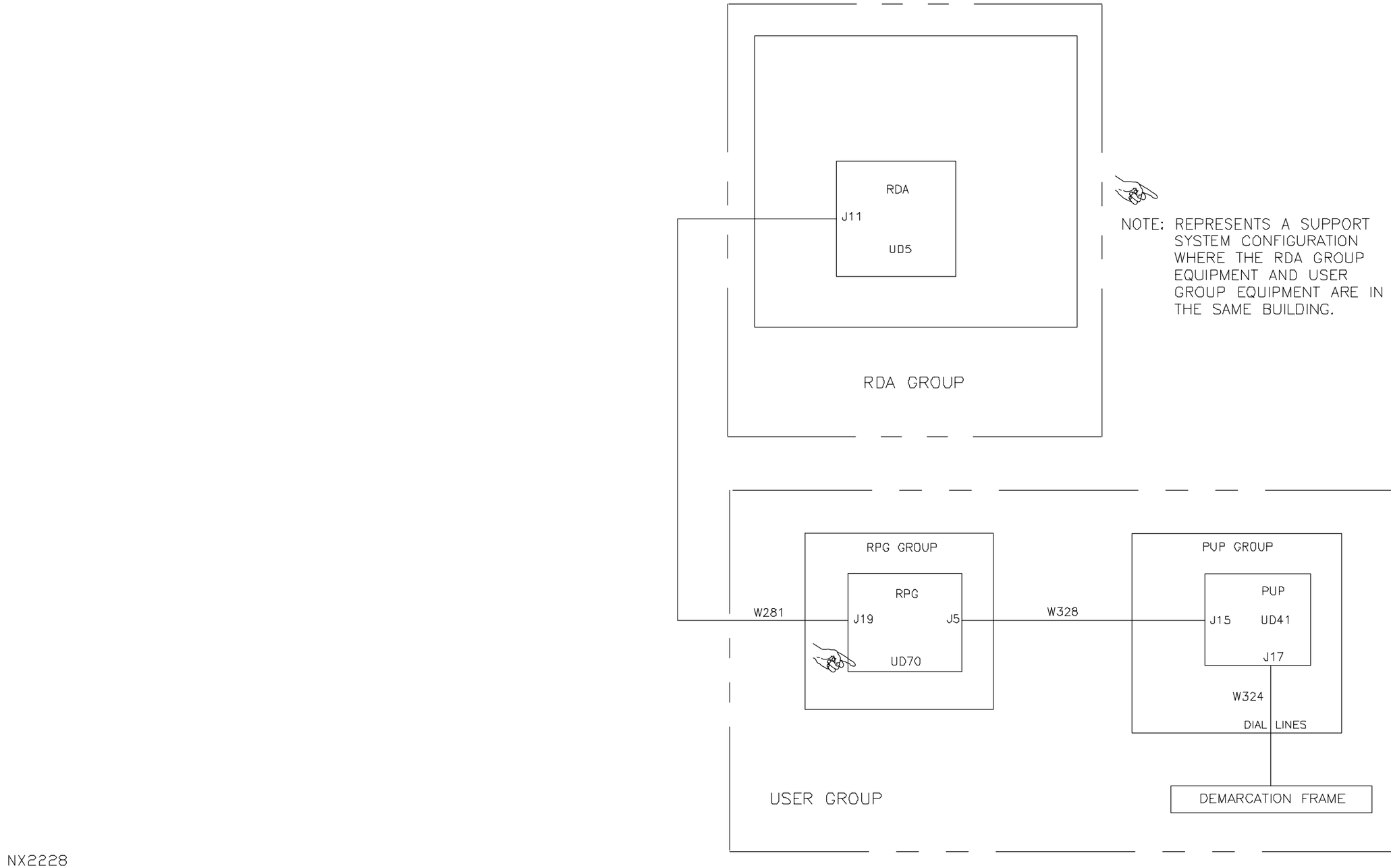


NX2228

Figure FO7-1. NEXRAD System Interface Diagram (Wideband between RDA (UD5), RPG (UD70), and PUP (UD41))

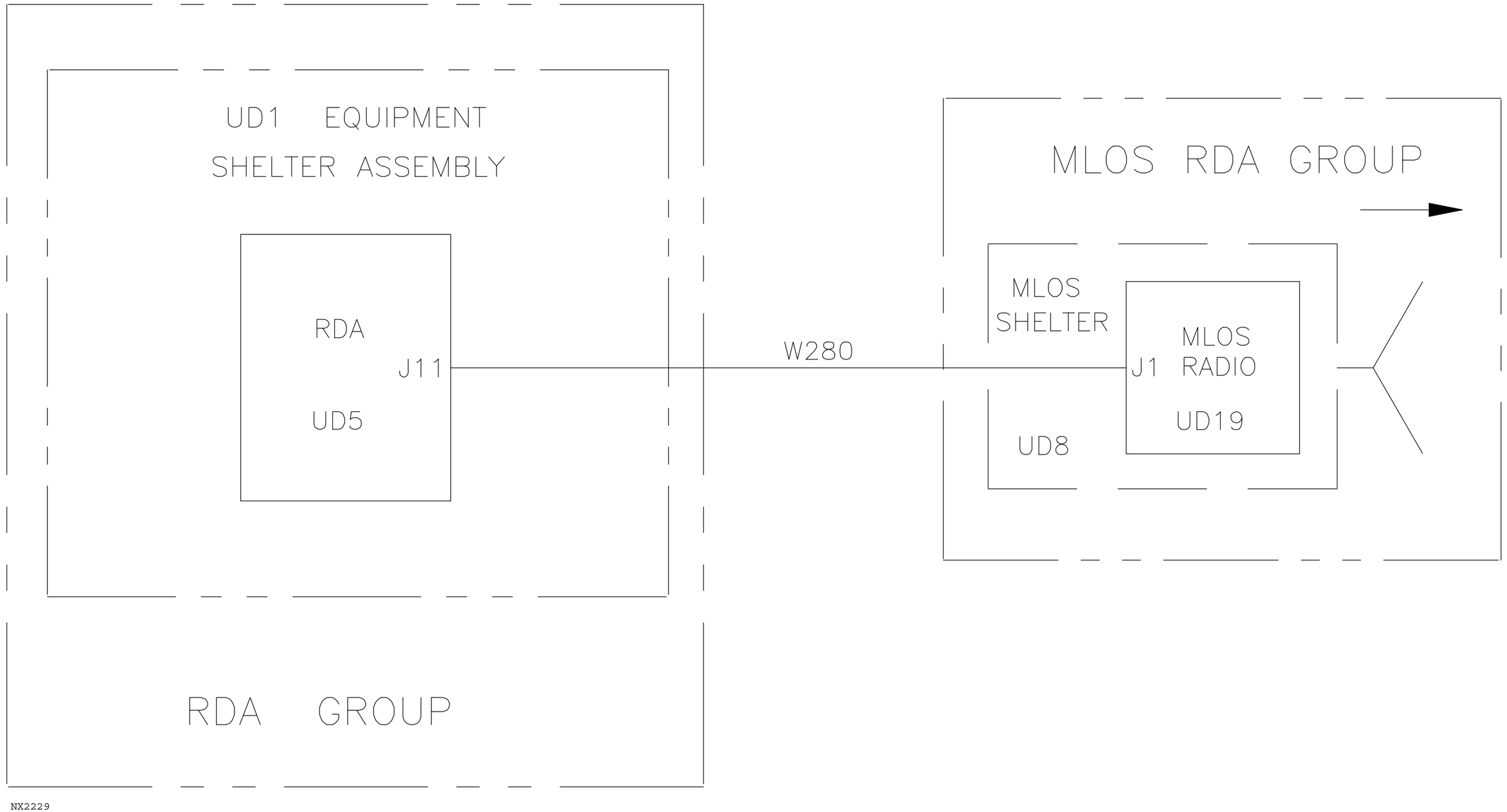


Figure FO7-2. NEXRAD System Interface Diagram (Wideband between RDA (UD5) and MLOS Radio (UD19))

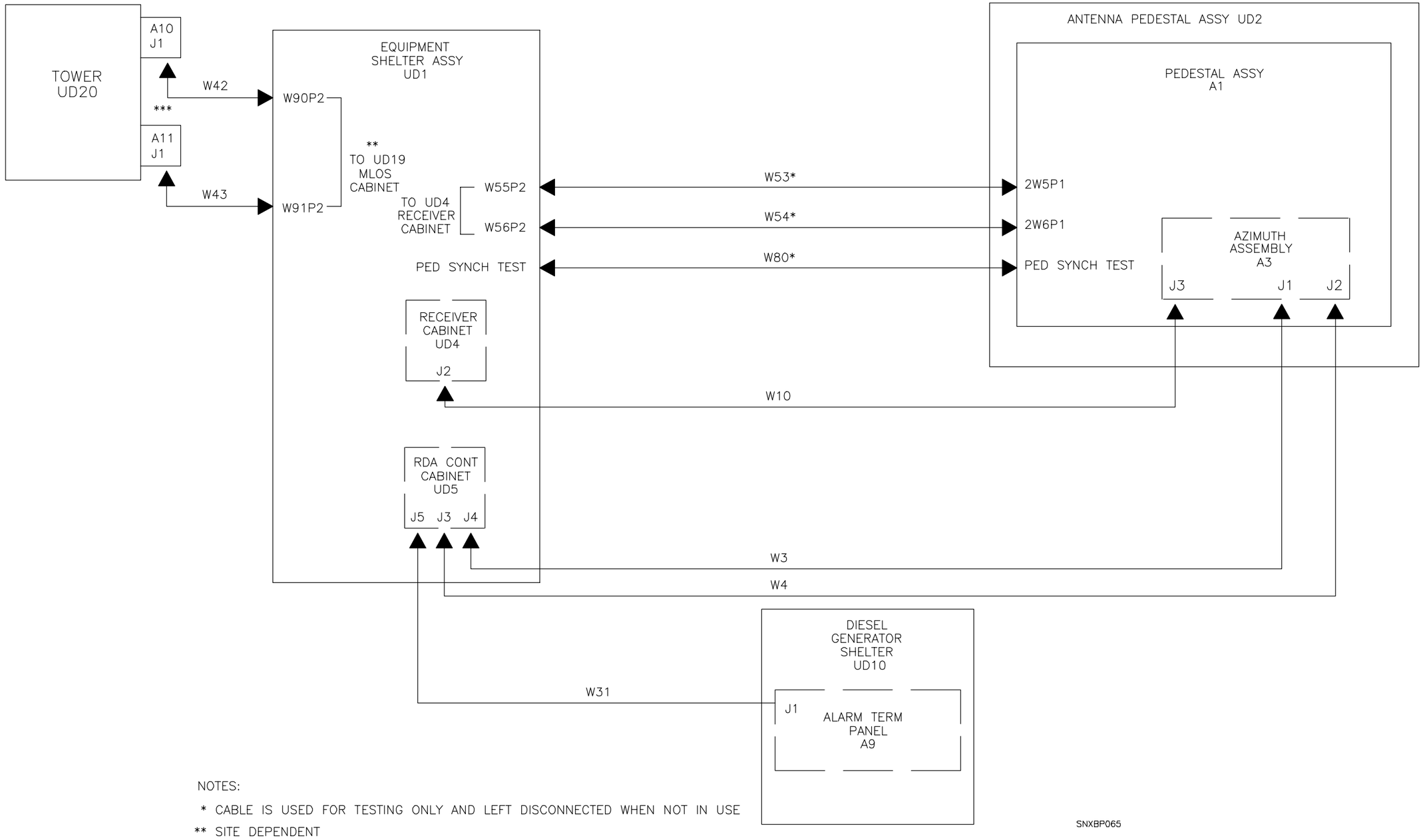


NOTES:

* CABLE IS USED FOR TESTING ONLY AND LEFT DISCONNECTED WHEN NOT IN USE

** SITE DEPENDENT

*** USED FOR SPACE DIVERSITY ONLY

NX2230

Figure FO7-3. Radar Data Acquisition Group (RDA) ICD

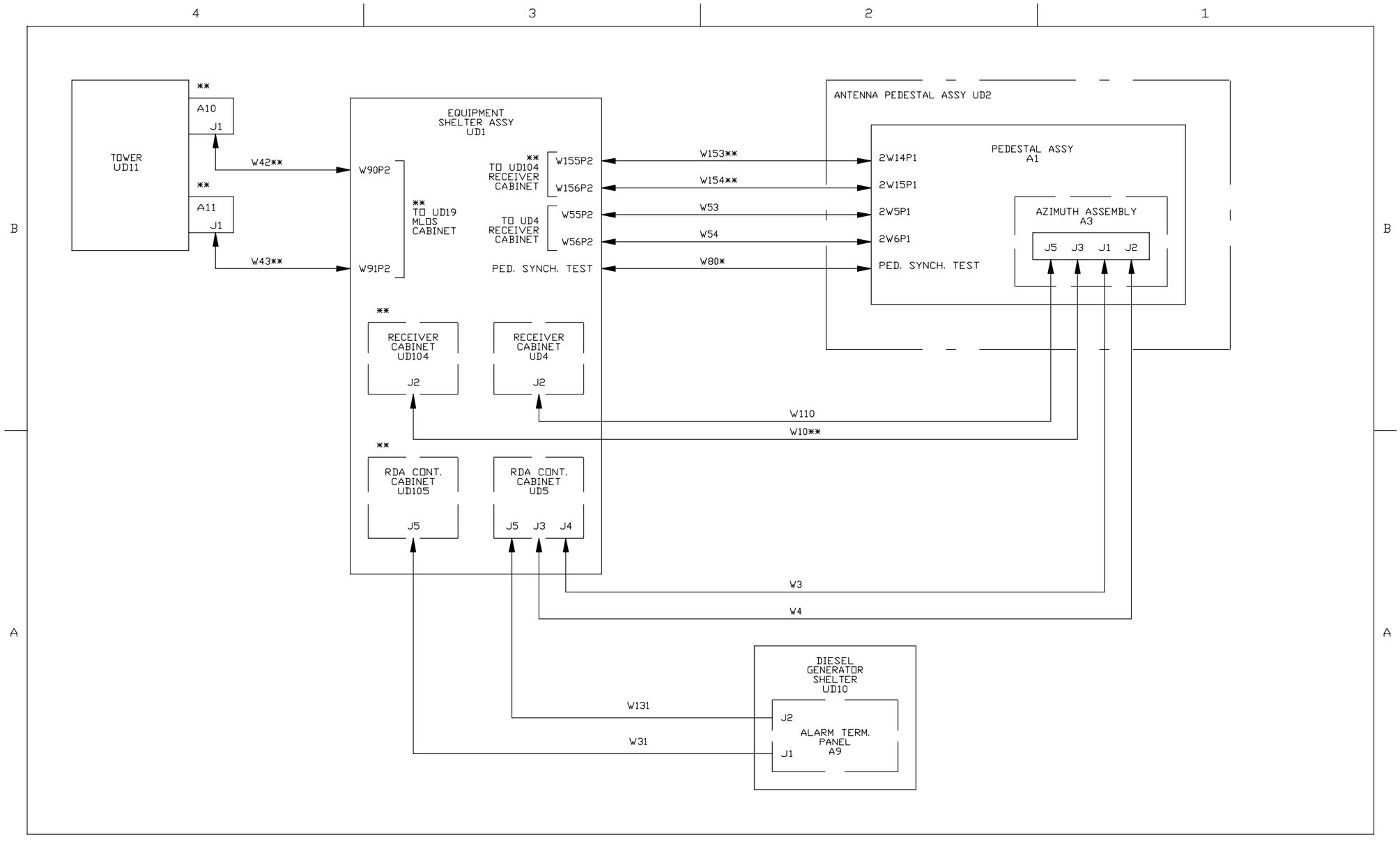


NOTE:

* CABLE IS USED FOR TESTING ONLY AND LEFT DISCONNECTED WHEN NOT IN USE
** SITE DEPENDENT

NX2231 ICD 1213565 REV A

Figure FO7-4. Redundant Radar Data Acquisition Group (RDA) ICD

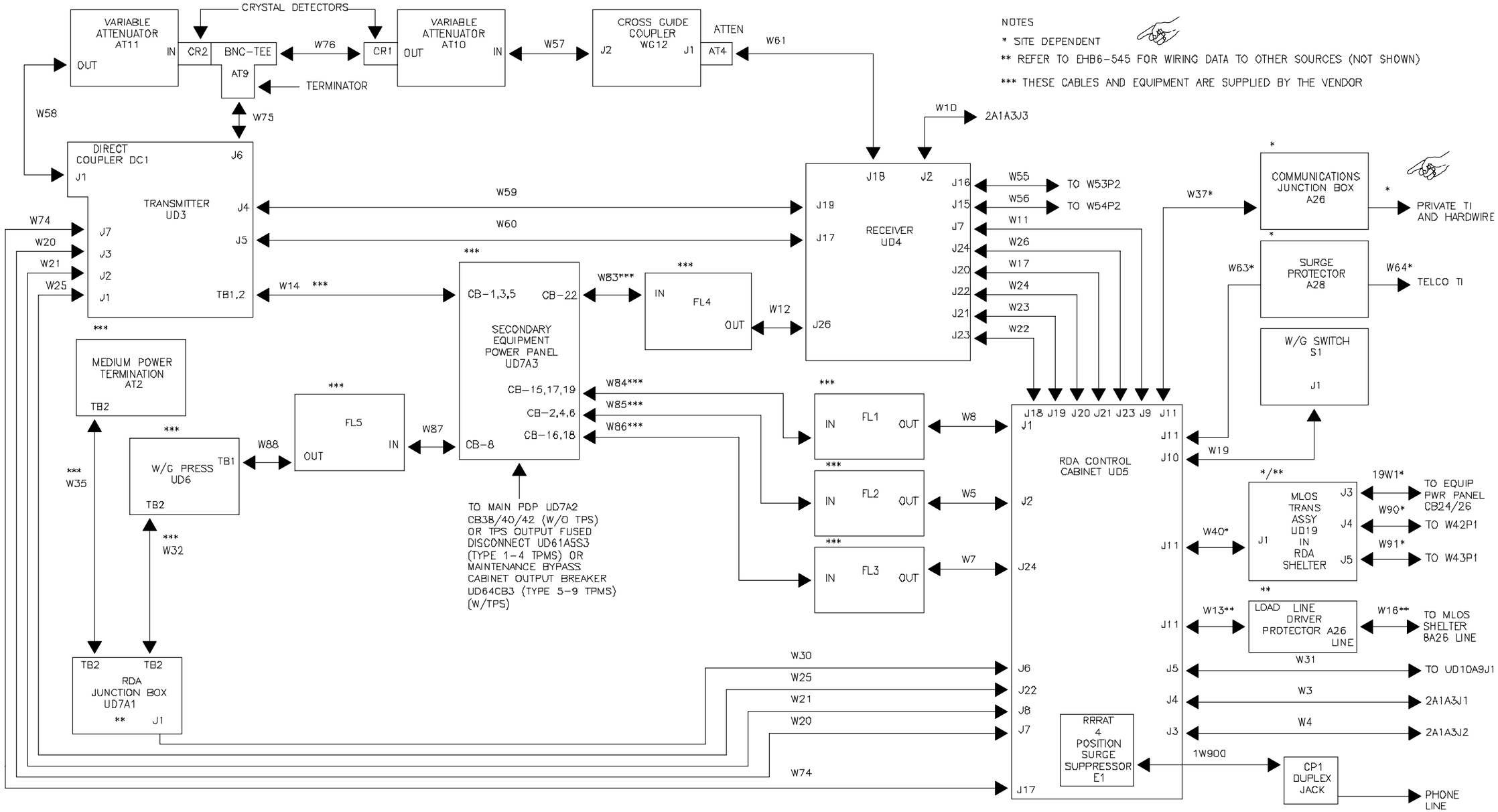


NX2232

Figure FO7-5. RDA Shelter Assembly UD1 ICD (Sheet 1 of 2)

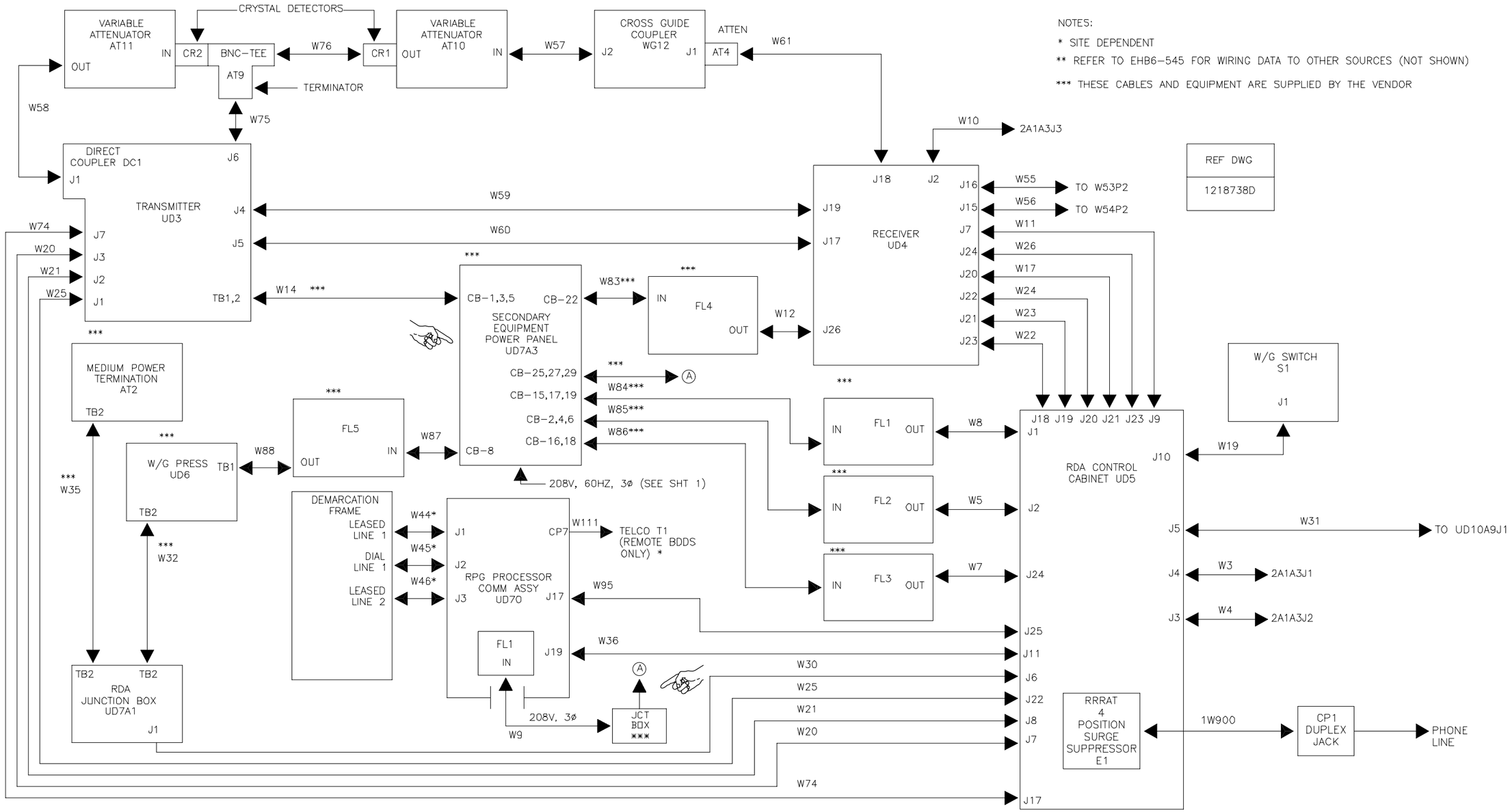


NX2233

Figure FO7–5. RDA (RDA/RPG Collocated) Shelter Assembly, UD1 ICD (Sheet 2 of 2)

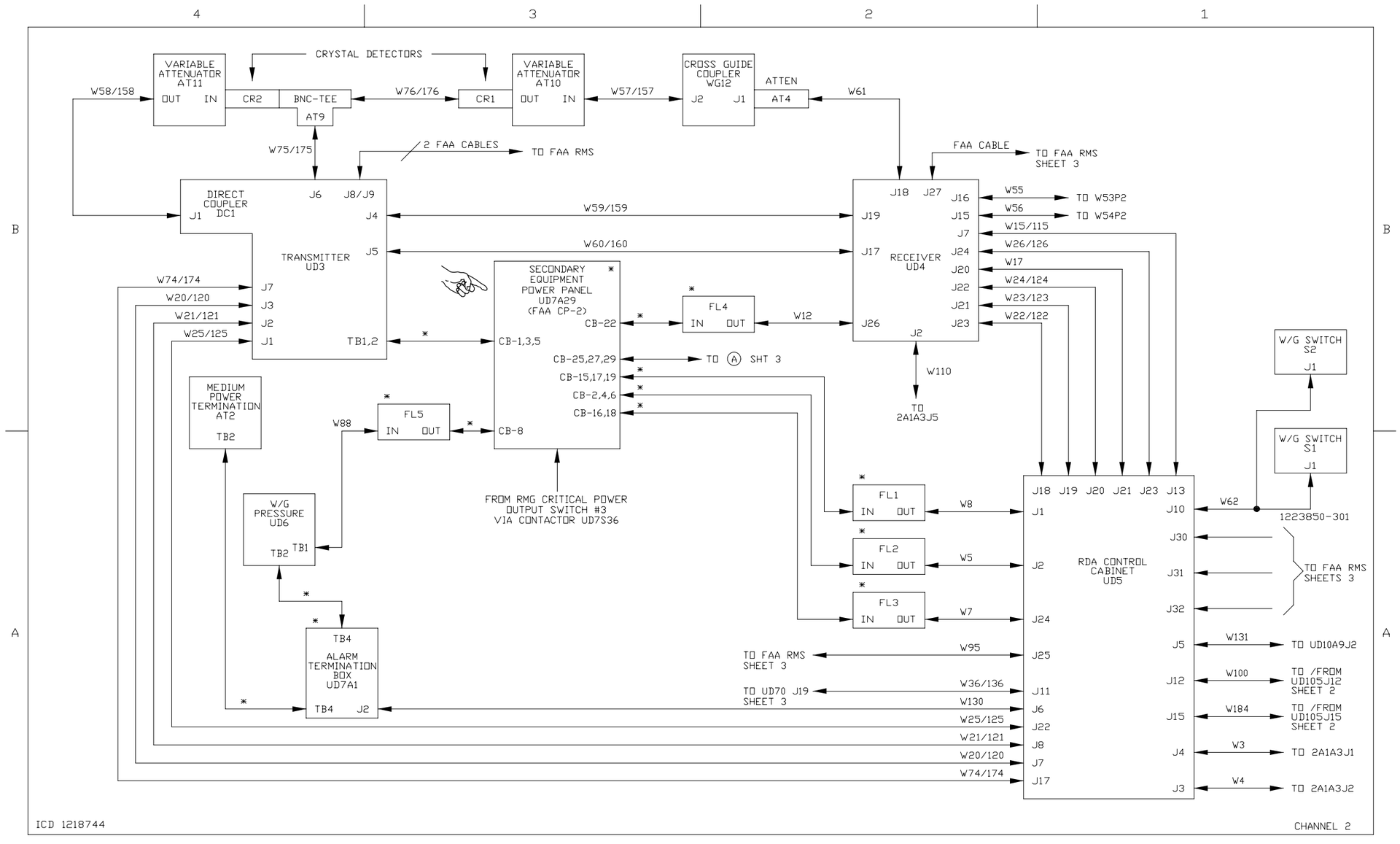


*SUPPLIED BY VENDOR
**SITE DEPENDENT

NOTE: REDUNDANT CONFIGURATIONS 1215201-327, -328, -324, 1215202-312, -314, -336, -344, -347, -361, -362, -363, 1215203-301, -302, 1215204-333, -347 AND 1223831-301 USED ON SITES 1208281-304, -306, -336, -344, -346, -377, -502, -505, -514, -520, -525, -550, -568, -569 AND -570.

NX2234

Figure FO7–6. FAA Redundant RDA Shelter Assembly UD1 ICD (Sheet 1 of 3)

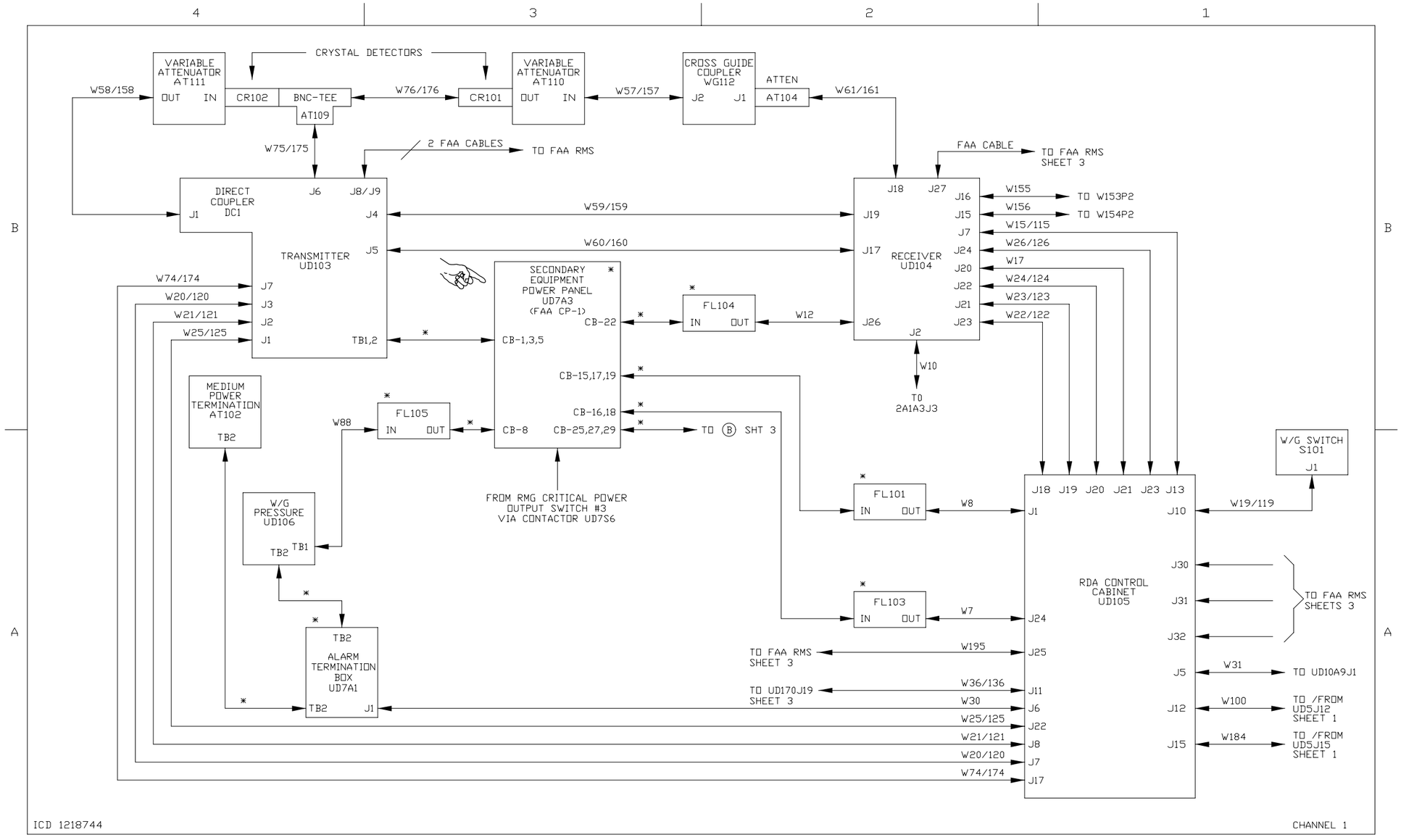


*SUPPLIED BY VENDOR
**SITE DEPENDENT

NOTE: REDUNDANT CONFIGURATIONS 1215201-327, -328, -324, 1215202-312, -314, -336, -344, -347, -361, -362, -363, 1215203-301, -302, 1215204-333, -347 AND 1223831-301 USED ON SITES 1208281-304, -306, -336, -344, -346, -377, -502, -505, -514, -520, -525, -550, -568, -569 AND -570.

NX2235

Figure FO7–6. FAA Redundant RDA Shelter Assembly UD1 ICD (Sheet 2 of 3)

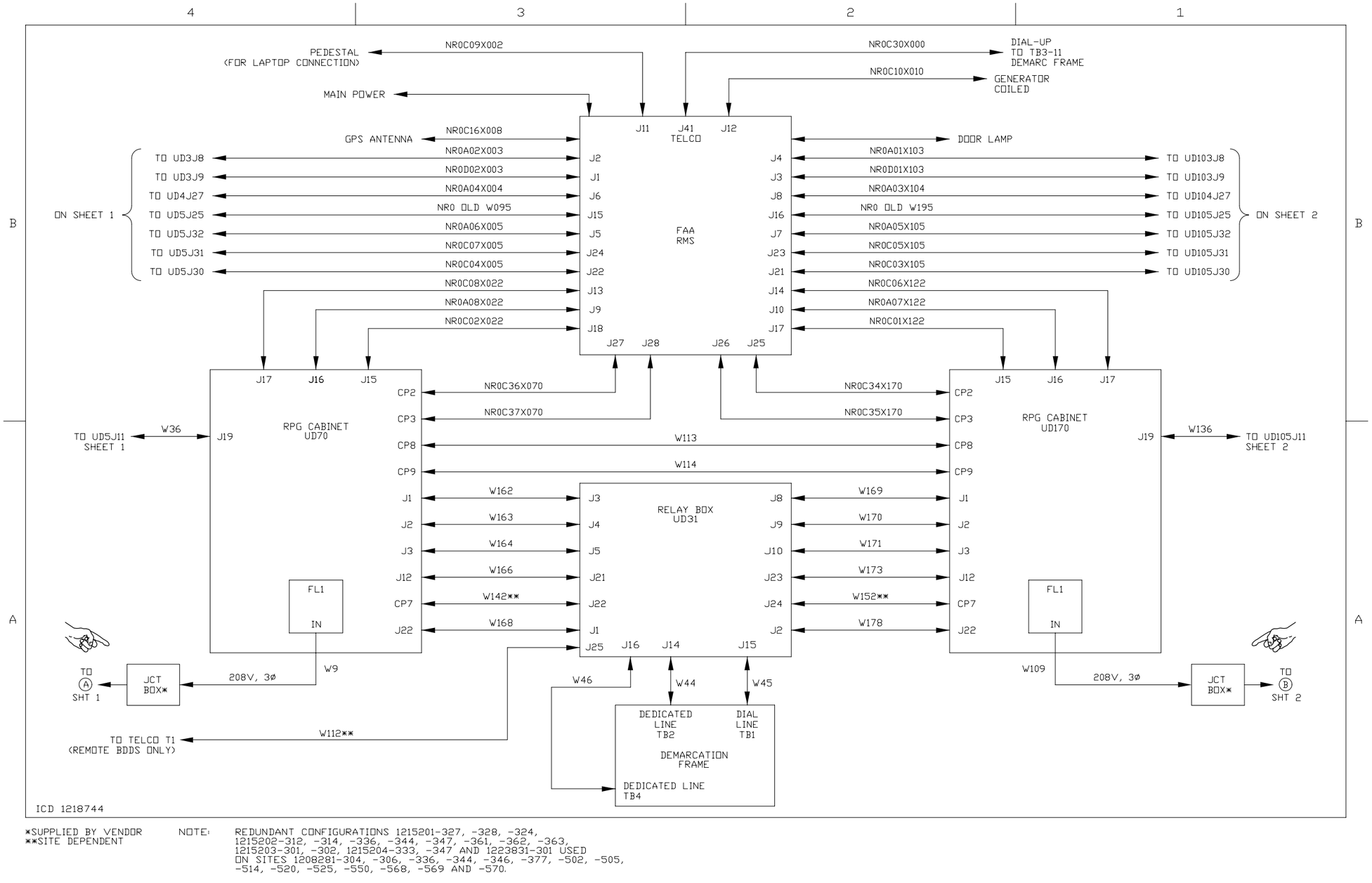


*SUPPLIED BY VENDOR
**SITE DEPENDENT

NOTE: REDUNDANT CONFIGURATIONS 1215201-327, -328, -324, 1215202-312, -314, -336, -344, -347, -361, -362, -363, 1215203-301, -302, 1215204-333, -347 AND 1223831-301 USED ON SITES 1208281-304, -306, -336, -344, -346, -377, -502, -505, -514, -520, -525, -550, -568, -569 AND -570.

NX2236

Figure FO7–6. FAA Redundant RDA Shelter Assembly UD1 ICD (Sheet 3 of 3)

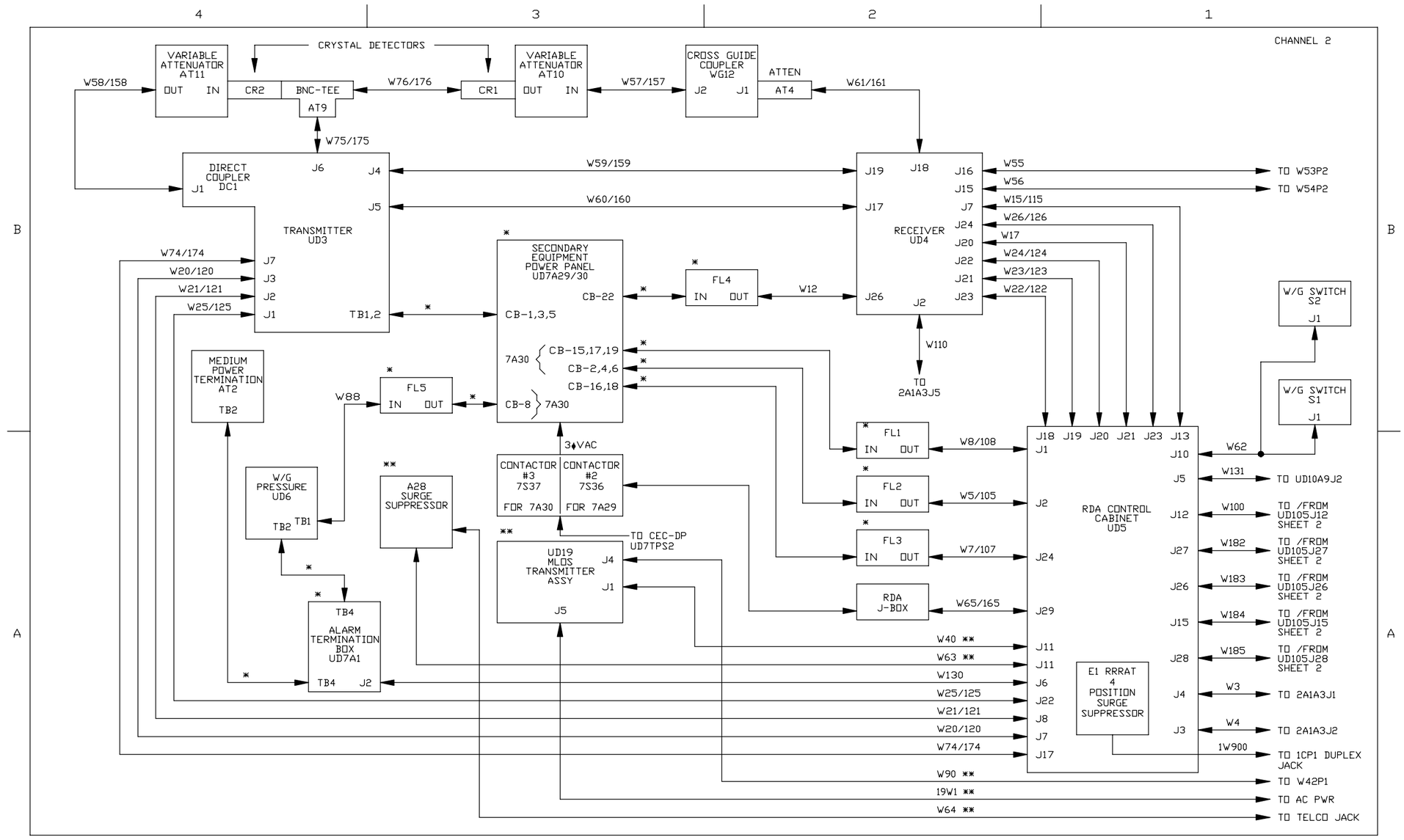


*SUPPLIED BY VENDOR
**SITE DEPENDENT

NOTE:

REDUNDANT CONFIGURATIONS 1215200-309, -311, 1215201-307, 1215202-311, -322, 1215203-326, 1215204-305, -328 AND -354 SHOWN USED ON SITES 1208281-330, -361, -368, -393, -500, -508, -533, -537 AND -564

NX2237 ICD 1222361

Figure FO7-7. NWS Redundant RDA Shelter Assembly UD1 ICD (Sheet 1 of 2)

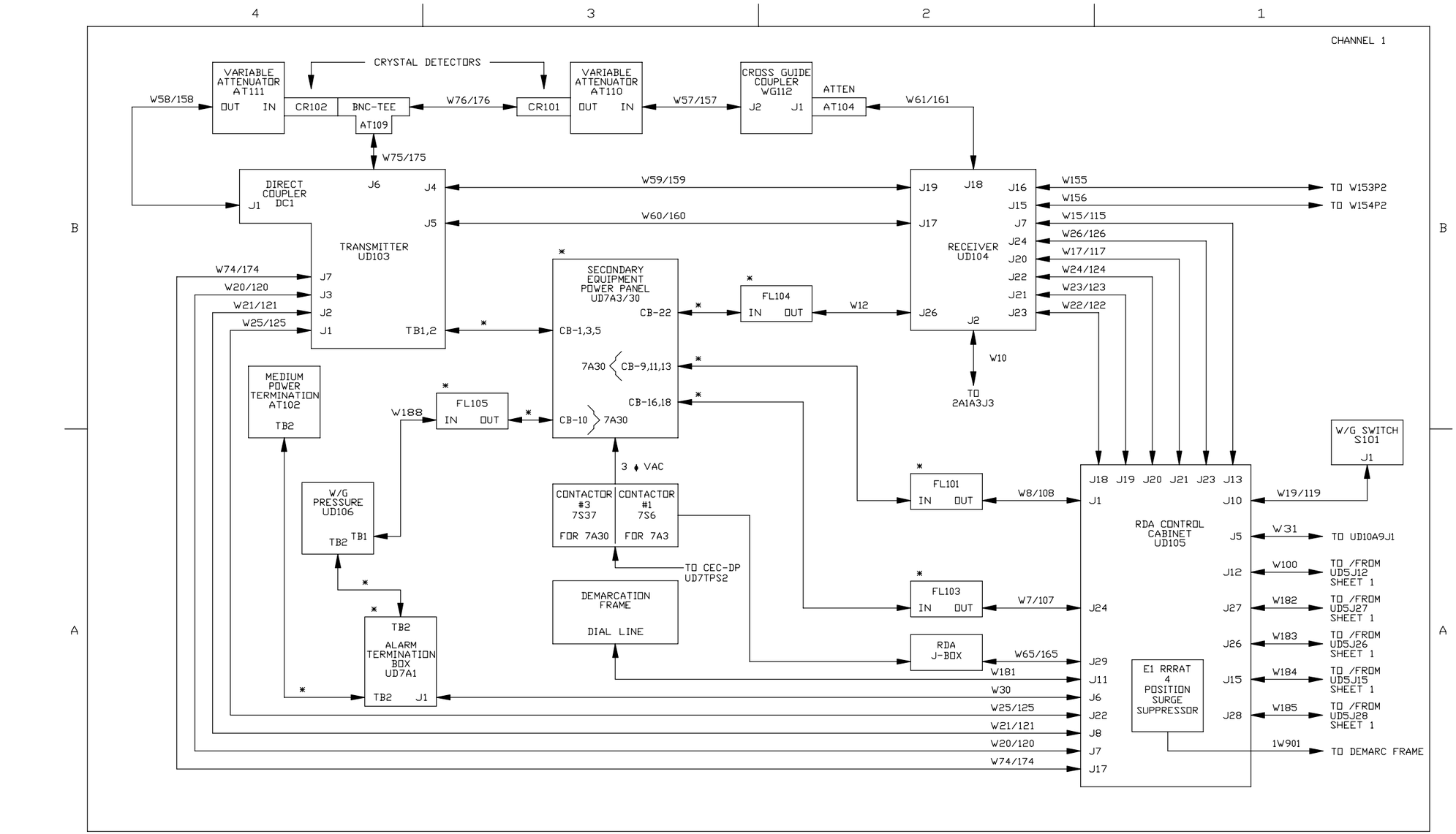


*SUPPLIED BY VENDOR
**SITE DEPENDENT

NOTE:

REDUNDANT CONFIGURATIONS 1215200-309, -311, 1215201-307, 1215202-311, -322, 1215203-326, 1215204-305, -328 AND -354 SHOWN USED ON SITES 1208281-330, -361, -368, -393, -500, -508, -533, -537 AND -564

NX2238

ICD 1222361

Figure FO7-7. NWS Redundant RDA Shelter Assembly UD1 ICD (Sheet 2 of 2)

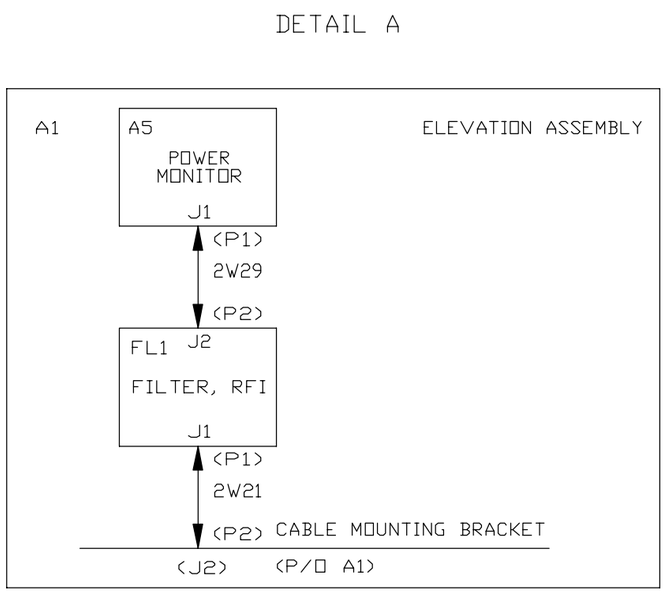


DRAWING REFLECTS SINGLE CHANNEL SYSTEMS

NX2239 ICD 1221833

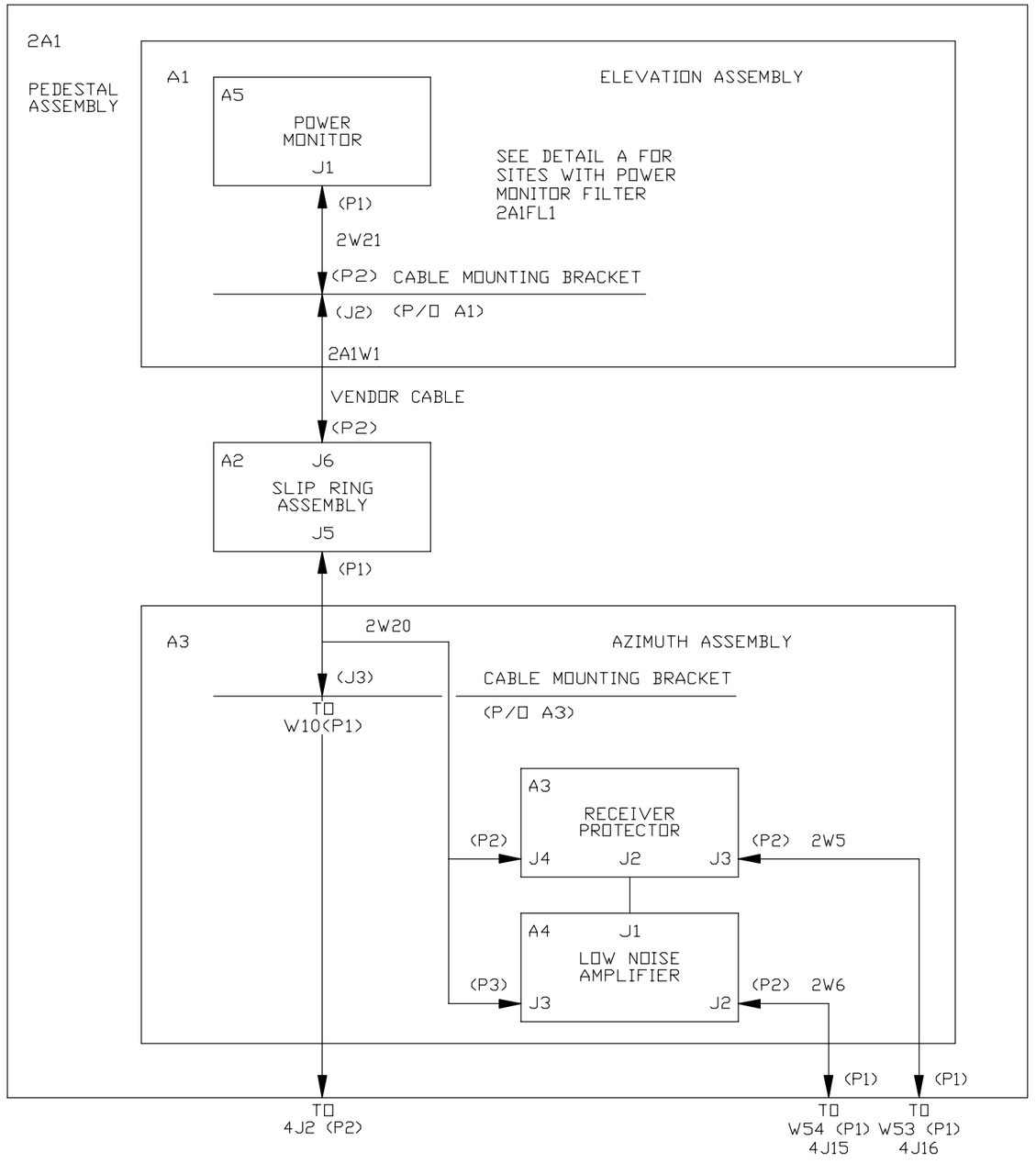


Figure FO7-8. Antenna/Pedestal Group ICD (Sheet 1 of 2)

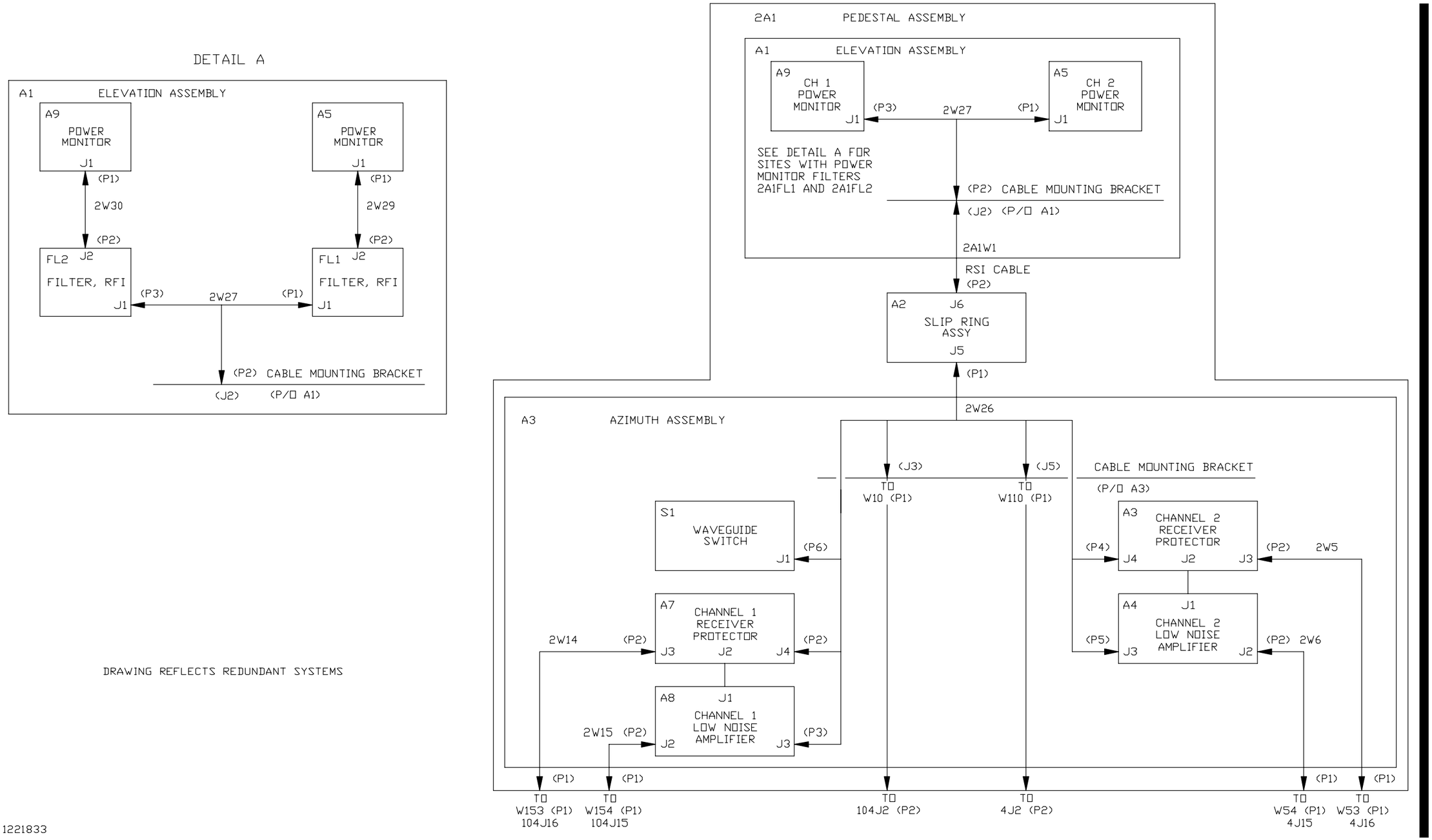


Figure FO7-8. Antenna/Pedestal Group ICD (Sheet 2 of 2)

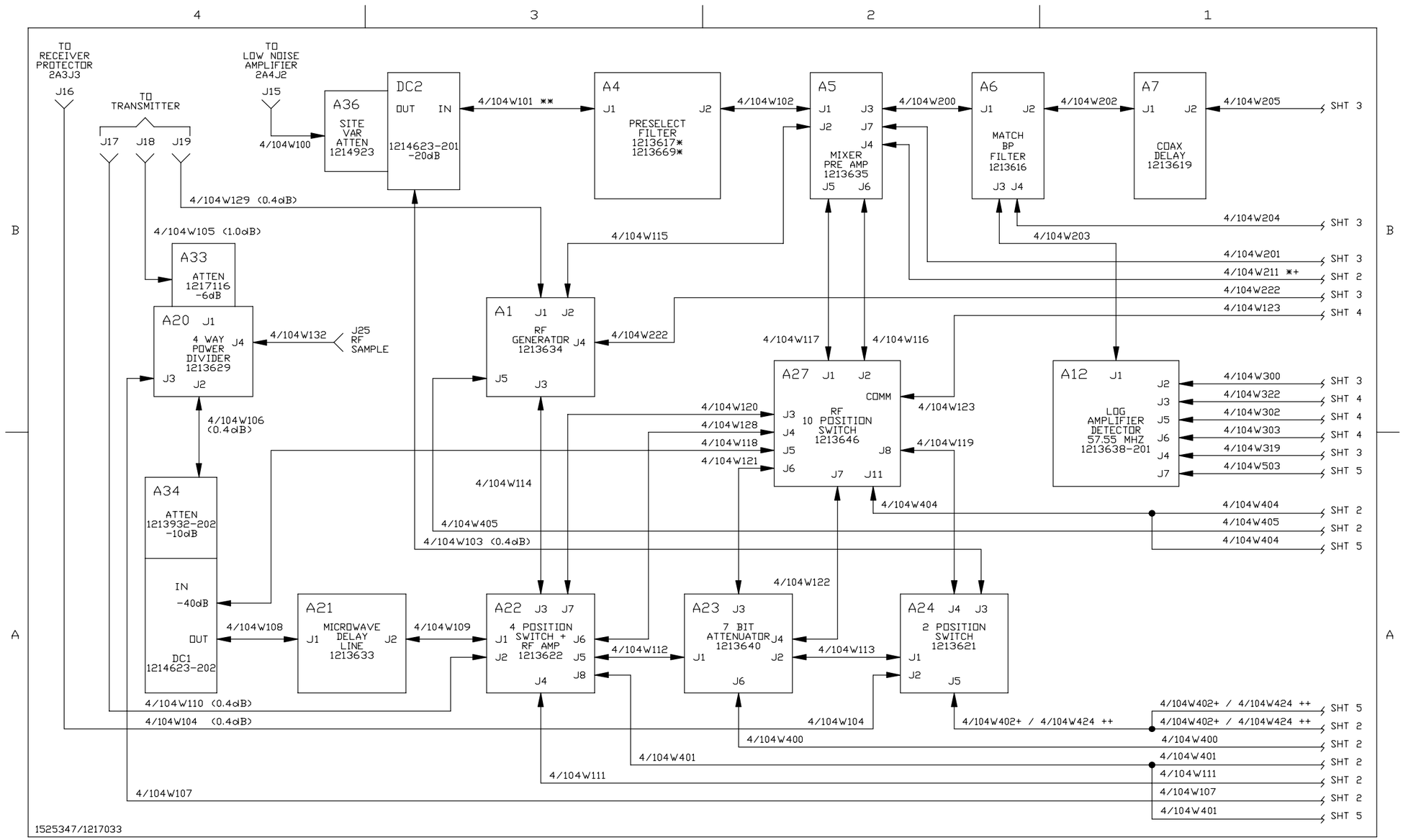


NOTES:

DRAWING REFLECTS BOTH NON-REDUNDANT AND REDUNDANT SITES UNLESS OTHERWISE INDICATED.

* SUPPLIED BY VENDOR
** SITE DEPENDENT
\+ USED ON NON-REDUNDANT SITES ONLY
++ USED ON REDUNDANT SITES ONLY

NX2241

Figure FO7-9. Radar Receiver, UD4 ICD
(Sheet 1 of 5)

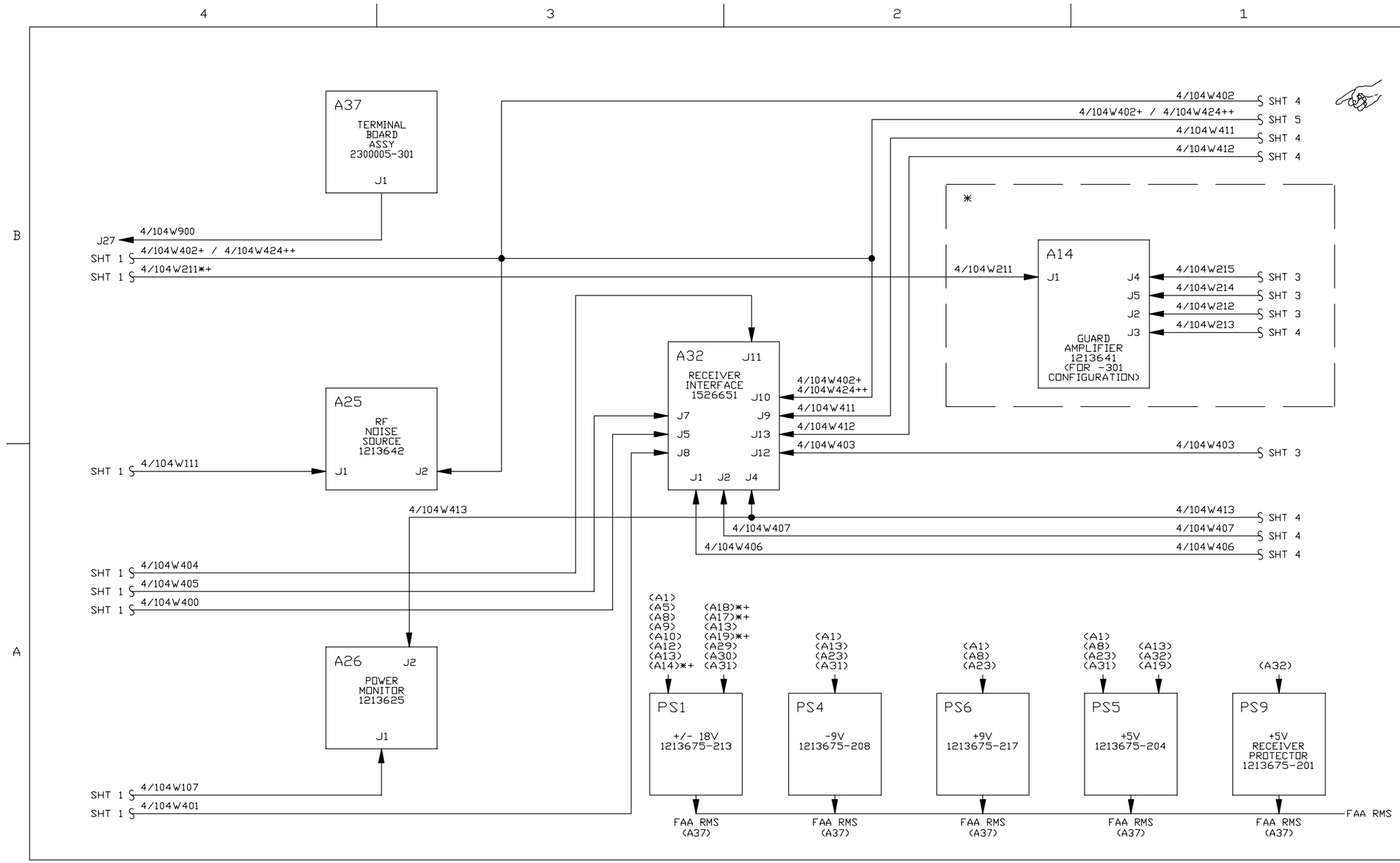


NOTES:

DRAWING REFLECTS BOTH NON-REDUNDANT AND REDUNDANT SITES UNLESS OTHERWISE INDICATED.

* SITE DEPENDENT
\+ USED ON NON-REDUNDANT SITES ONLY
++ USED ON REDUNDANT SITES ONLY

NX2242

Figure FO7-9. Radar Receiver, UD4 ICD
(Sheet 2 of 5)

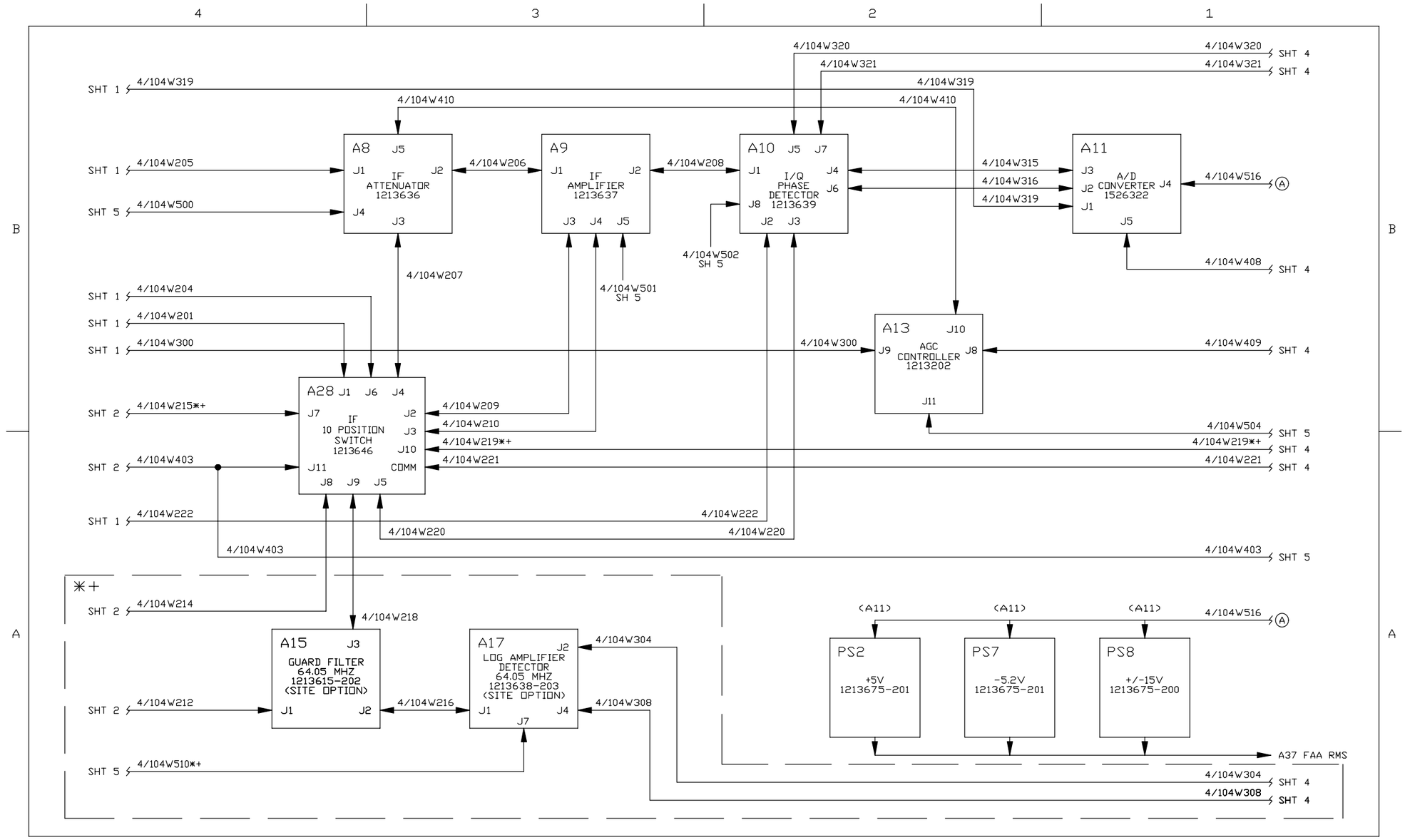


NOTES:

DRAWING REFLECTS BOTH NON-REDUNDANT AND REDUNDANT SITES UNLESS OTHERWISE INDICATED.

* SITE DEPENDENT
\+ USED ON NON-REDUNDANT SITES ONLY
++ USED ON REDUNDANT SITES ONLY

NX2243

Figure FO7-9. Radar Receiver, UD4 ICD (Sheet 3 of 5)

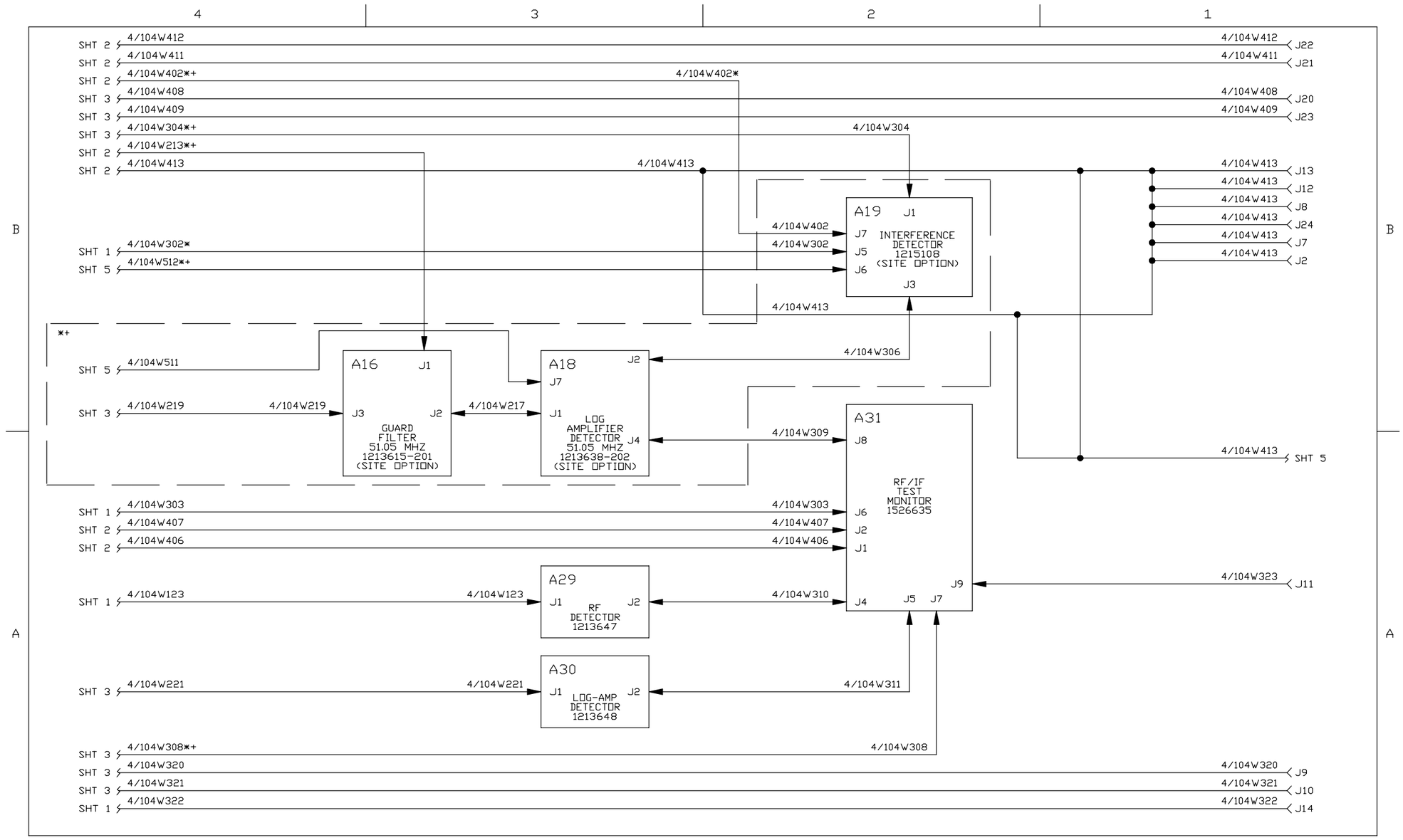


NOTES:

DRAWING REFLECTS BOTH NON-REDUNDANT AND REDUNDANT SITES UNLESS OTHERWISE INDICATED.

* SITE DEPENDENT
\+ USED ON NON-REDUNDANT SITES ONLY
++ USED ON REDUNDANT SITES ONLY

NX2244

Figure FO7-9. Radar Receiver, UD4 ICD (Sheet 4 of 5)

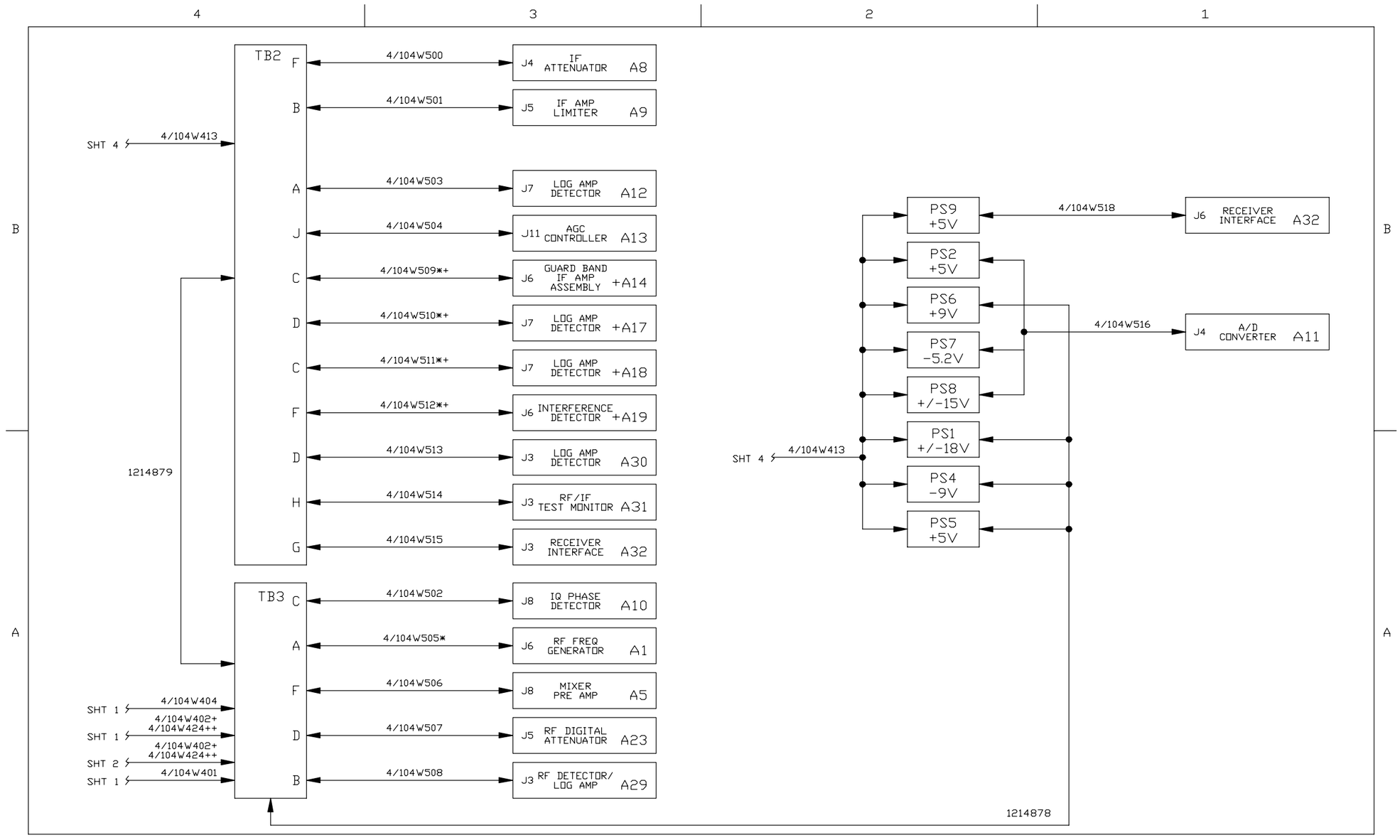


NOTES:

DRAWING REFLECTS BOTH NON-REDUNDANT AND REDUNDANT SITES UNLESS OTHERWISE INDICATED.

* SITE DEPENDENT
\+ USED ON NON-REDUNDANT SITES ONLY
++ USED ON REDUNDANT SITES ONLY

NX2245

Figure FO7-9. Radar Receiver, UD4 ICD
(Sheet 5 of 5)

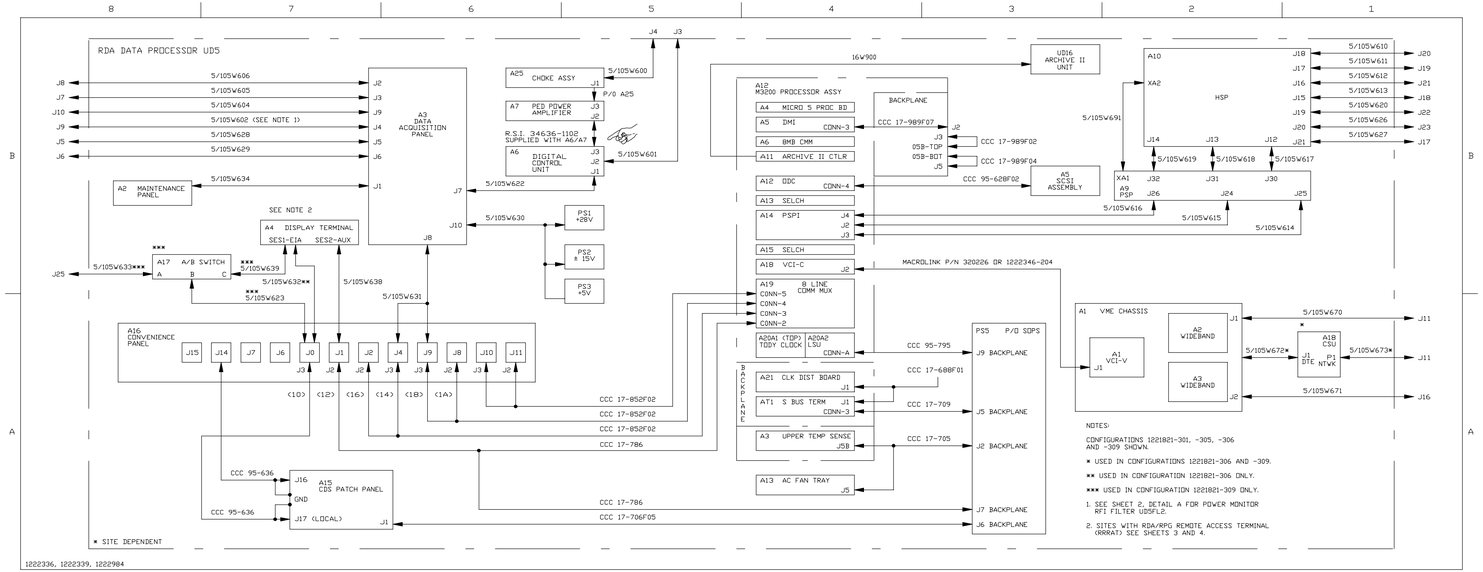


NX2246

Figure FO7-10. RDA Data Processor UD5 (ICD)
(Sheet 1 of 4)

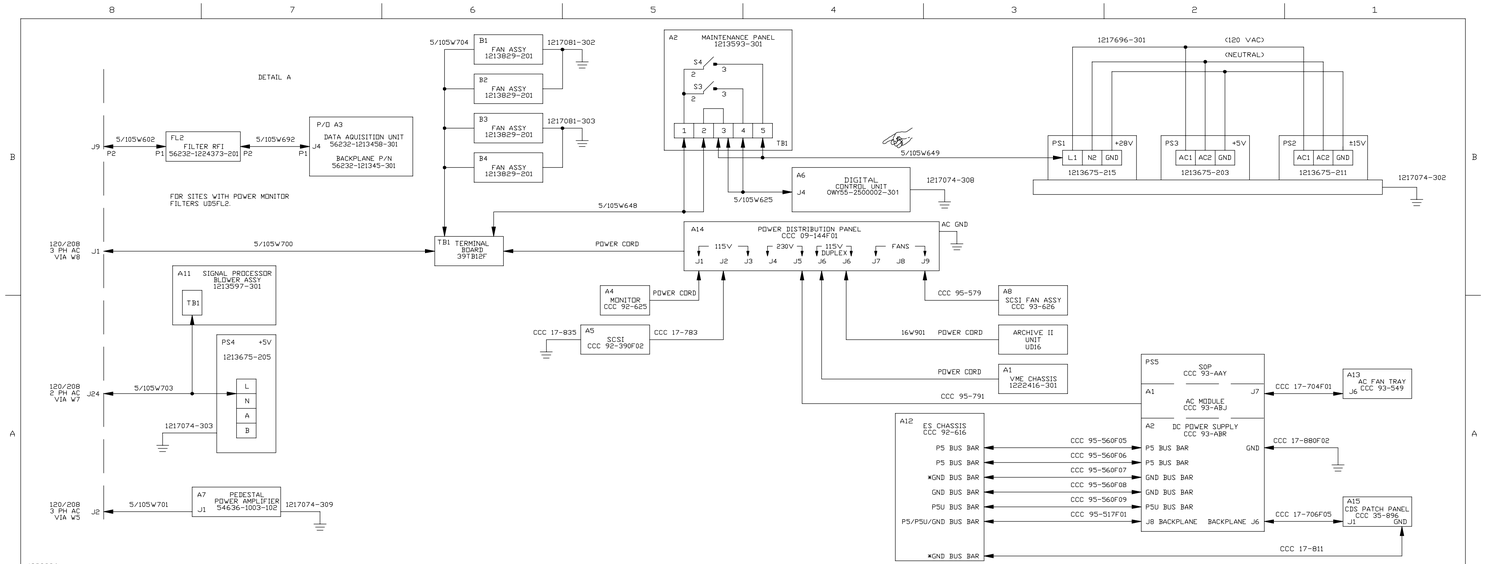


Figure FO7-10. RDA Data Processor UD5 (ICD)
(Sheet 2 of 4)



NX2247

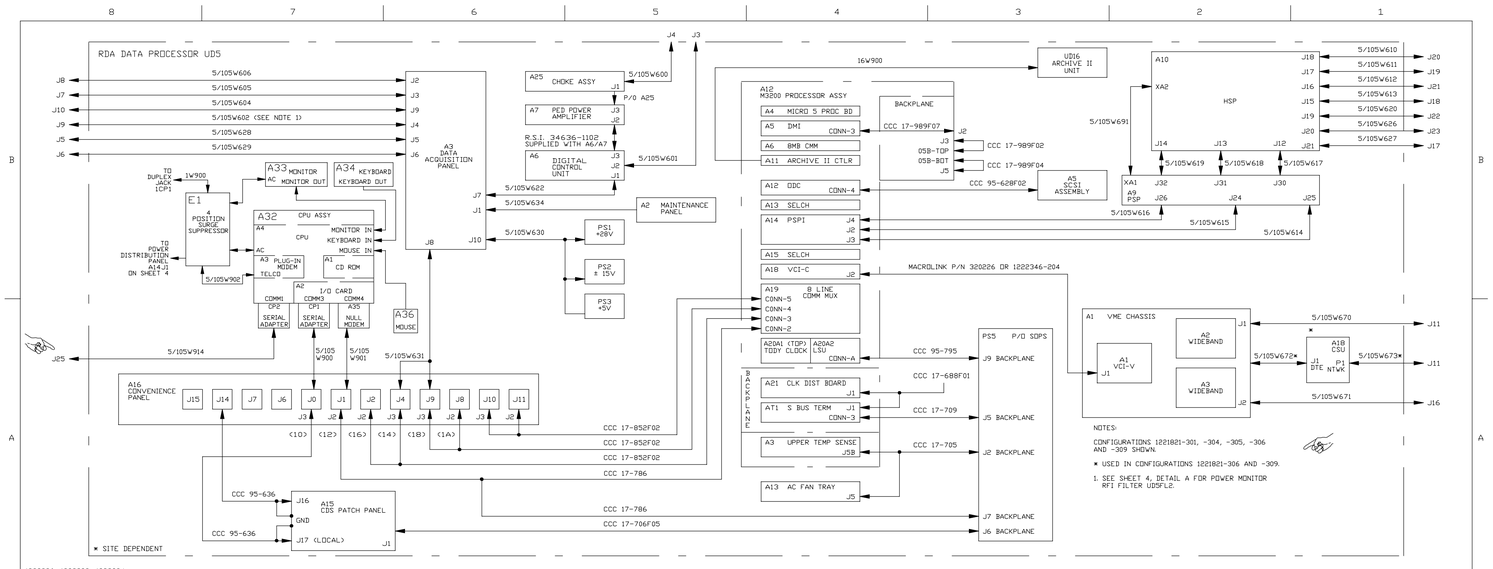


Figure FO7-10. RDA Data Processor UD5 (ICD)
(Sheet 3 of 4)

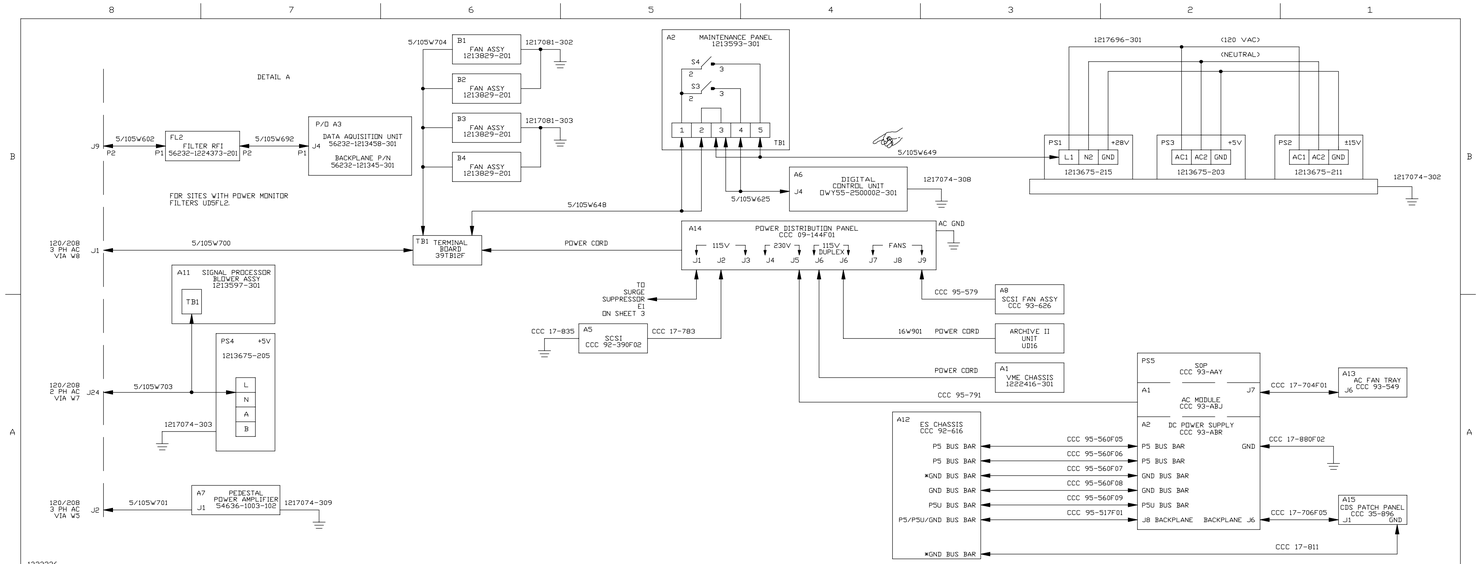


Figure FO7-10. RDA Data Processor UD5 (ICD)
(Sheet 4 of 4)

NX2249

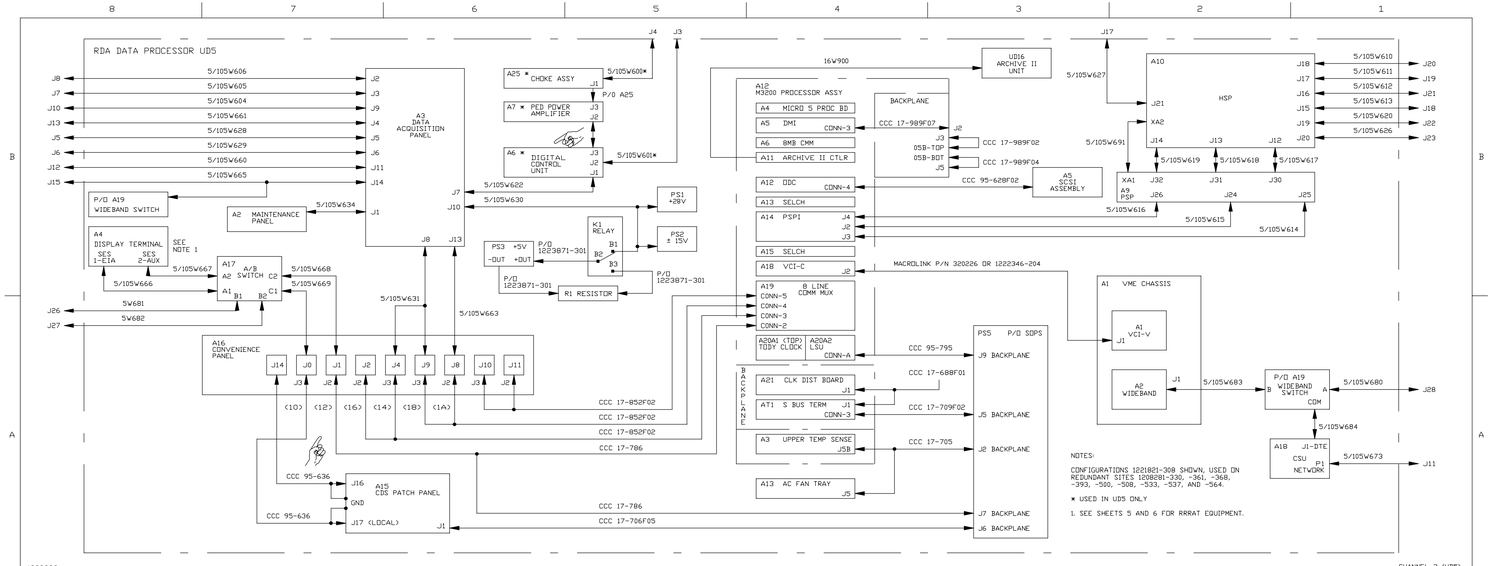


NX2250

Figure FO7-11. NWS Redundant RDA Data Processor UD5/UD105 (ICD)
(Sheet 1 of 8)

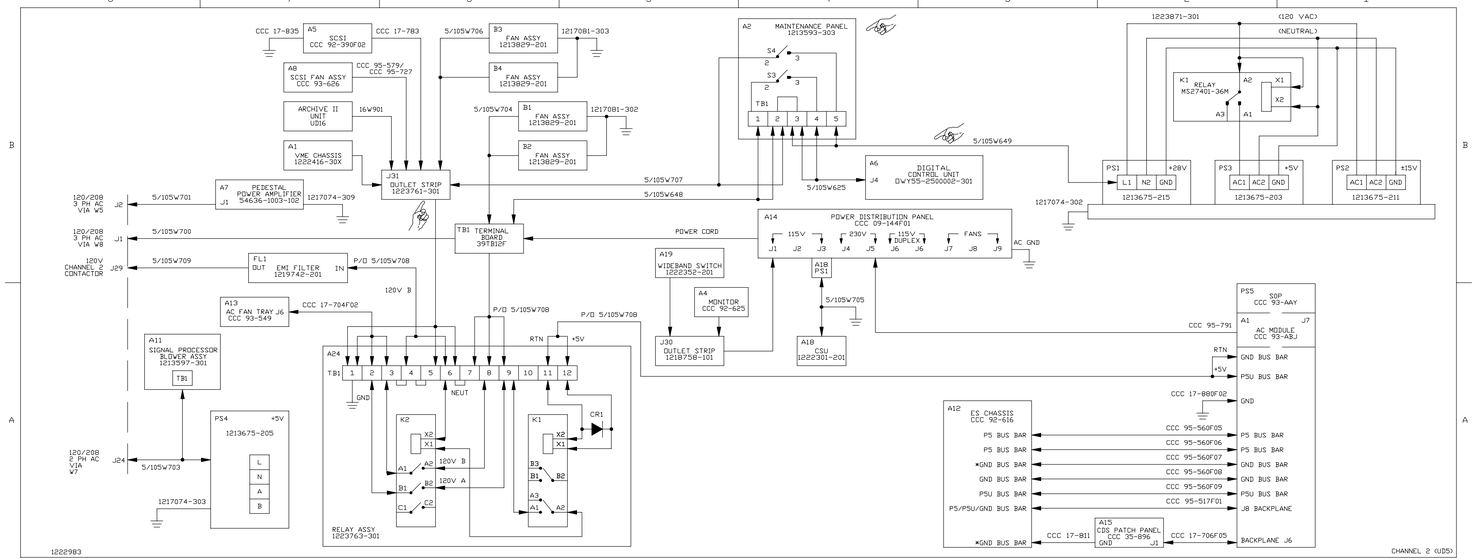


NX2251

Figure FO7-11. NWS Redundant RDA Data Processor UD5/UD105 (ICD)
(Sheet 2 of 8)

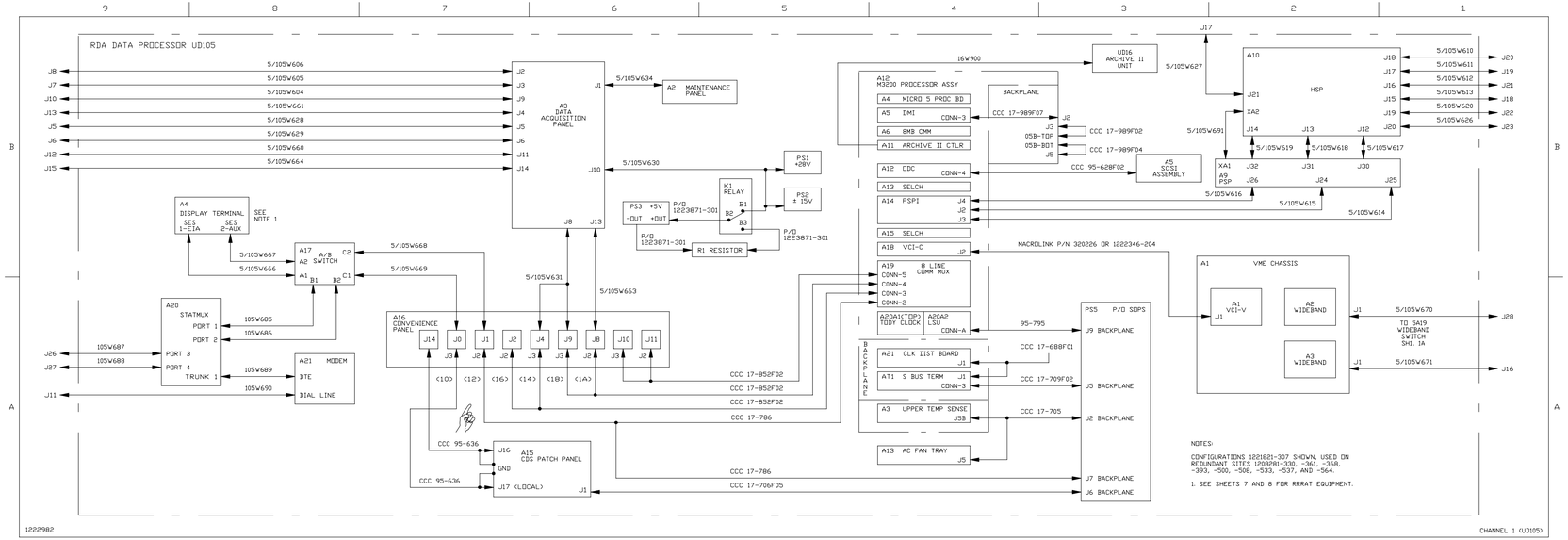


NX2252

Figure FO7-11. NWS Redundant RDA Data Processor UD5/UD105 (ICD)
(Sheet 3 of 8)

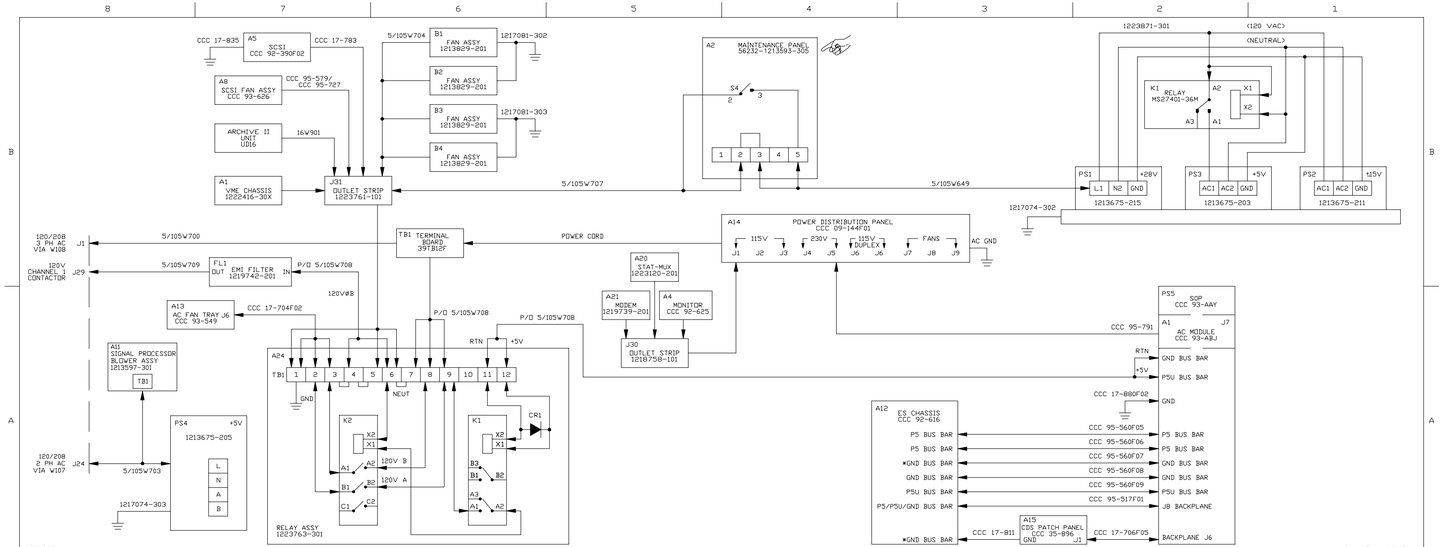


NX2253

Figure FO7-11. NWS Redundant RDA Data Processor UD5/UD105 (ICD) (Sheet 4 of 8)

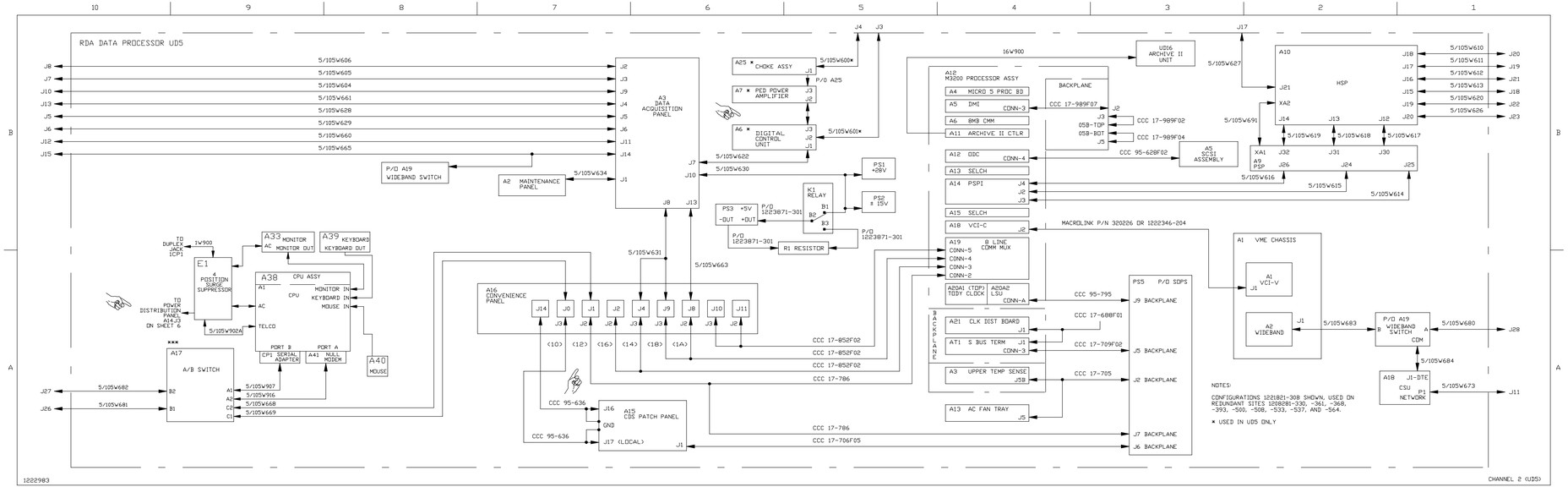


NX2254

Figure FO7-11. NWS Redundant RDA Data Processor UD5/UD105 (ICD)
(Sheet 5 of 8)

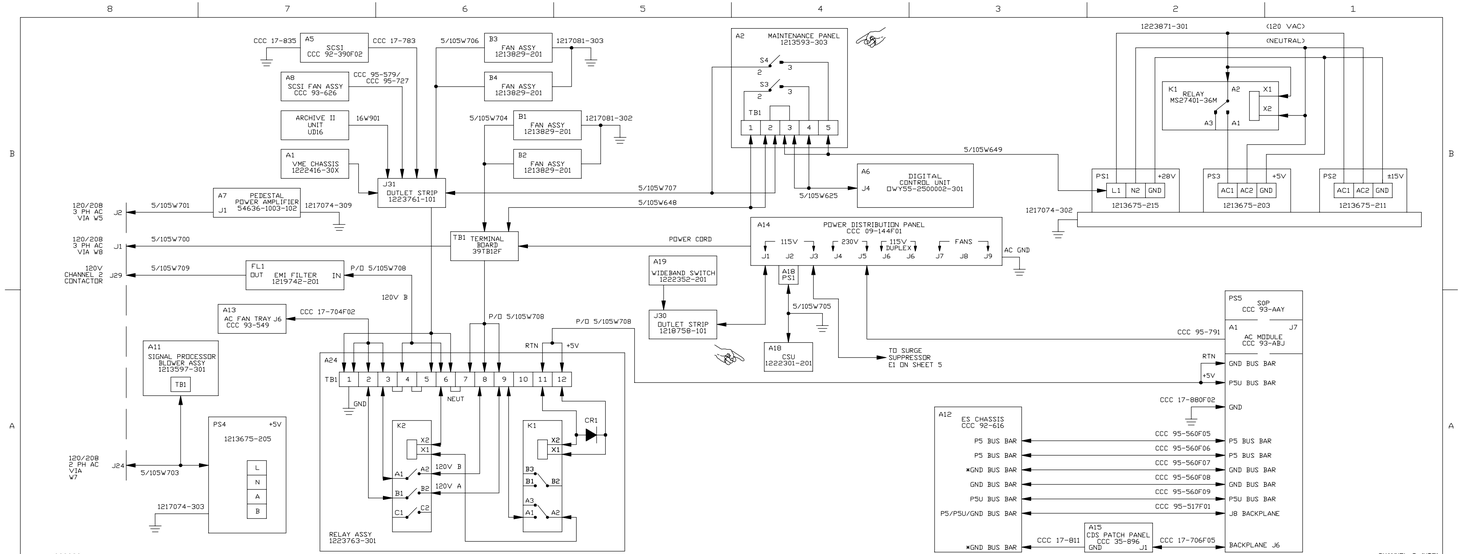


NX2255

Figure FO7-11. NWS Redundant RDA Data Processor UD5/UD105 (ICD) (Sheet 6 of 8)

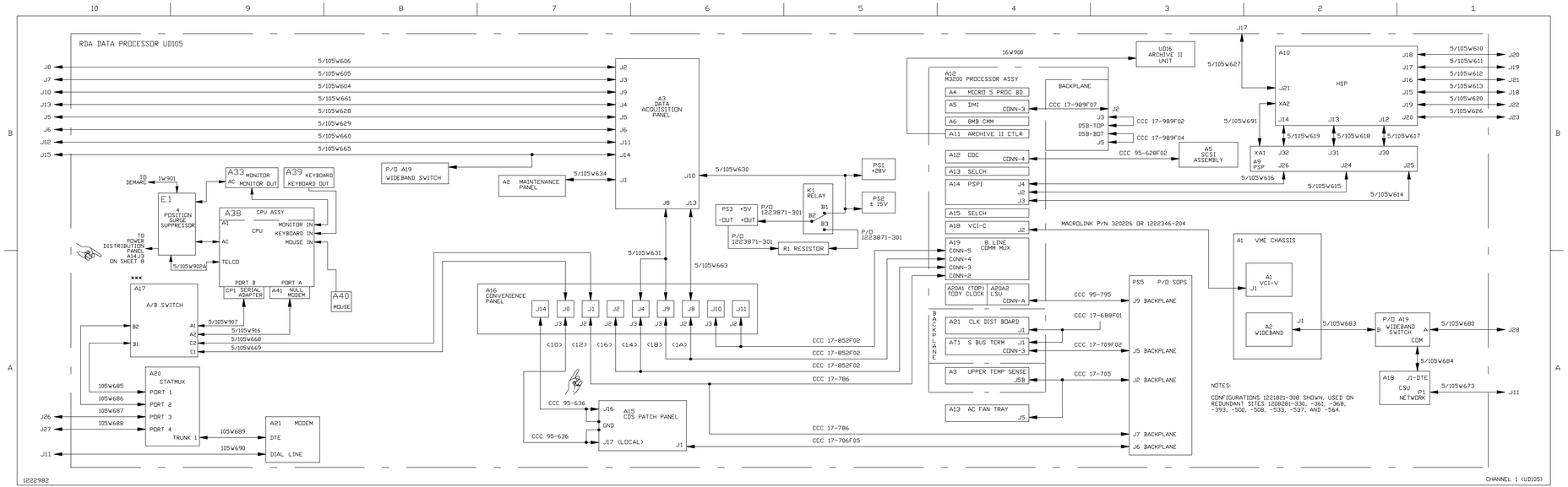


NX2256

Figure FO7-11. NWS Redundant RDA Data Processor UD5/UD105 (ICD)
(Sheet 7 of 8)

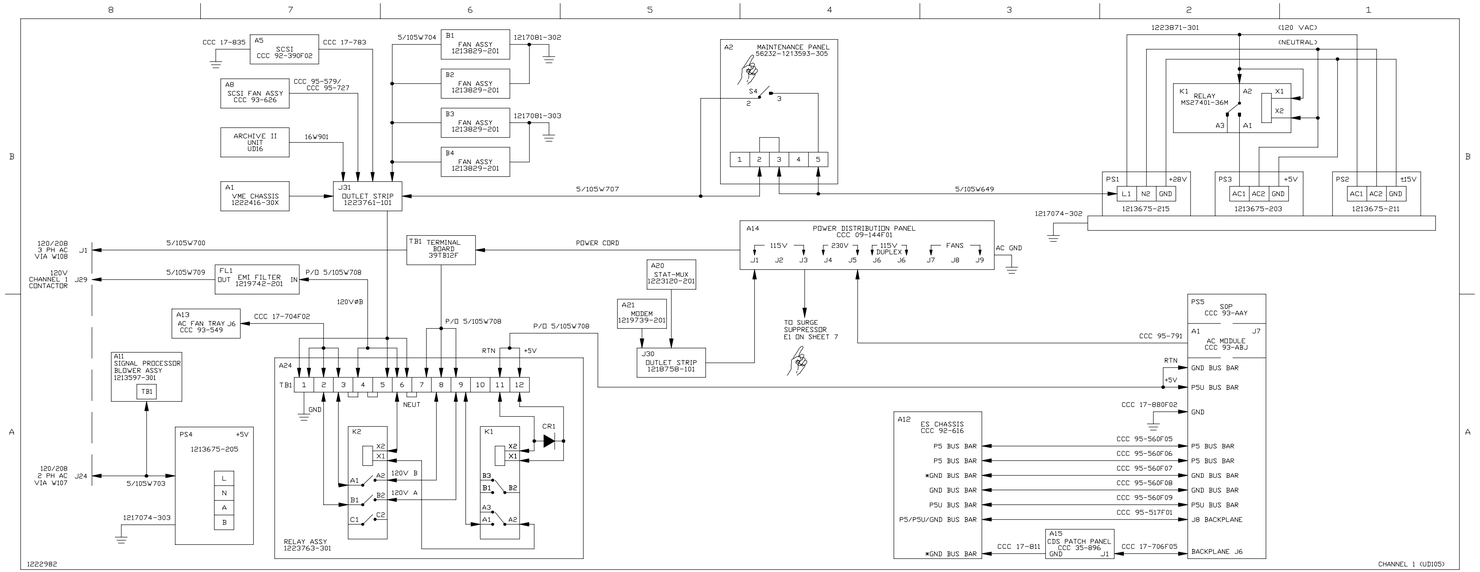


NX2257

Figure FO7-11. NWS Redundant RDA Data Processor UD5/UD105 (ICD) (Sheet 8 of 8)

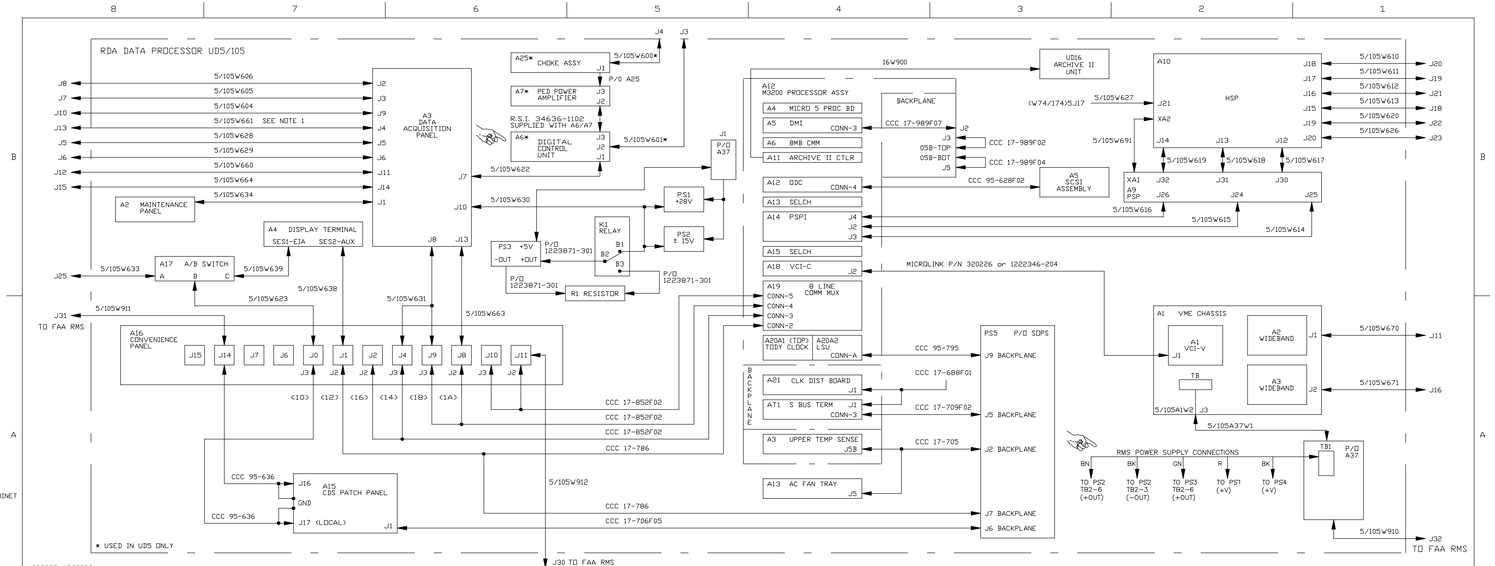


NOTES:

CONFIGURATIONS 1221821-302 AND -303 SHOWN, USED ON REDUNDANT SITES 1208281-304, -306, -336, -344, -346, -500, -505, -514, -520, -525, -550, -553, -568, -569 AND -570

1221821-302 REPRESENTS THE RDA UD5 CABINET AND 1221821-303 REPRESENTS THE RDA UD15 CABINET

× USED IN CONFIGURATION 1221821-303 ONLY

1. SEE SHEET 2, DETAIL A, FOR POWER MONITOR RFI FILTERS 5/105FL2.

NX2258

Figure FO7-12. FAA Redundant RDA Data Processor UD5/UD105 ICD (Sheet 1 of 2)

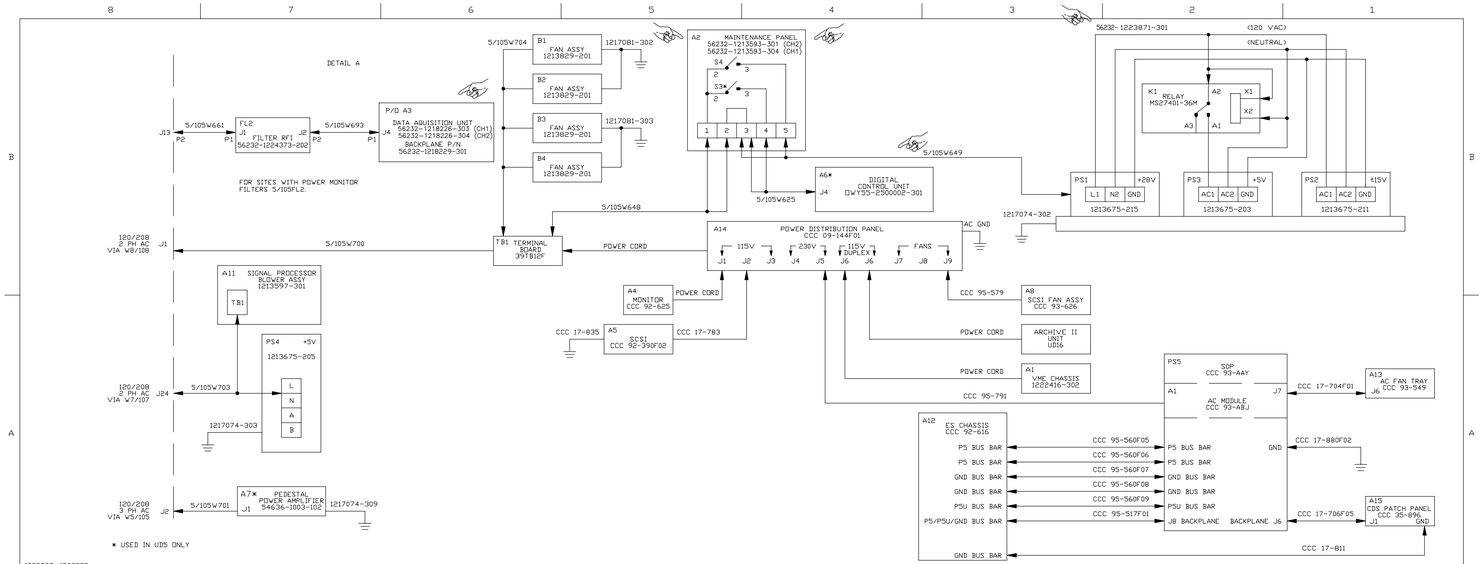


NX2259

Figure FO7-12. FAA Redundant RDA Data Processor UD5/UD105 ICD (Sheet 2 of 2)

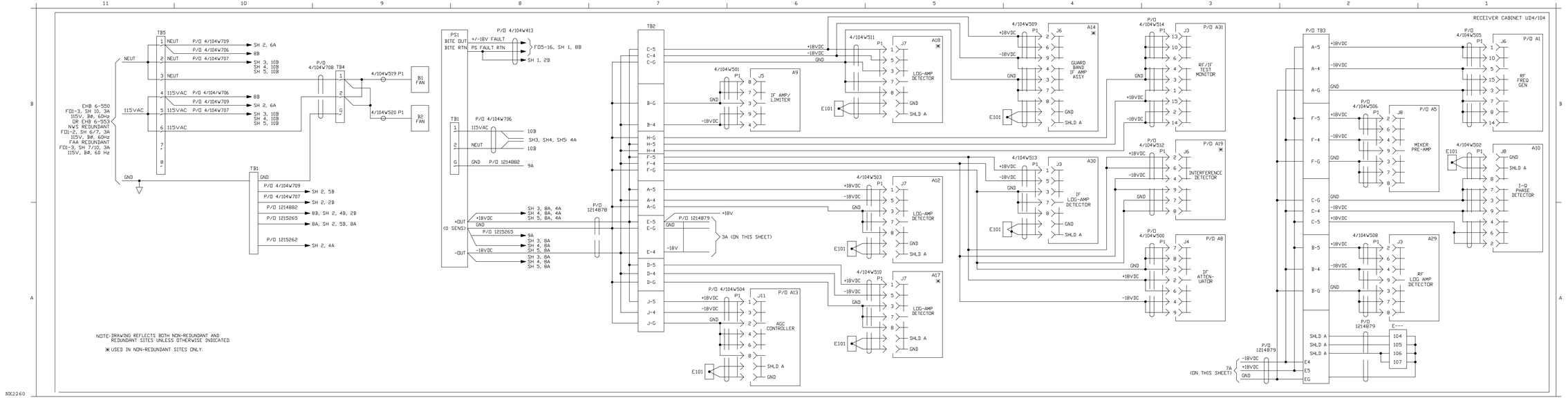


Figure FO7-13. RDA Receiver Cabinet UD4/104, Power Distribution Diagram (Sheet 1 of 5)

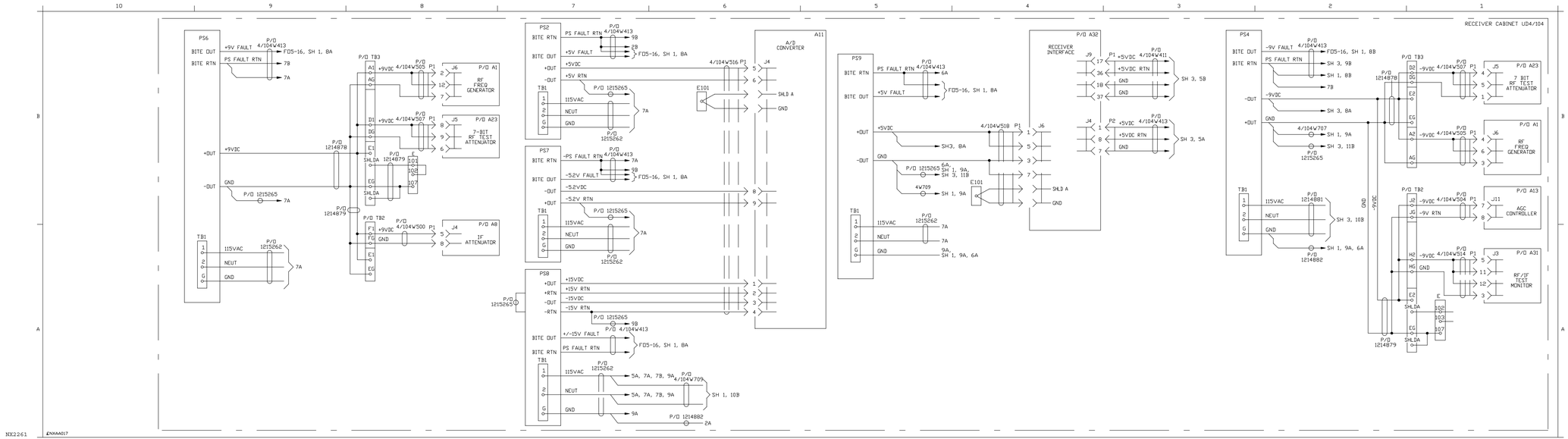


Figure FO7-13. RDA Receiver Cabinet UD4, Power Distribution Diagram (Sheet 2 of 5)

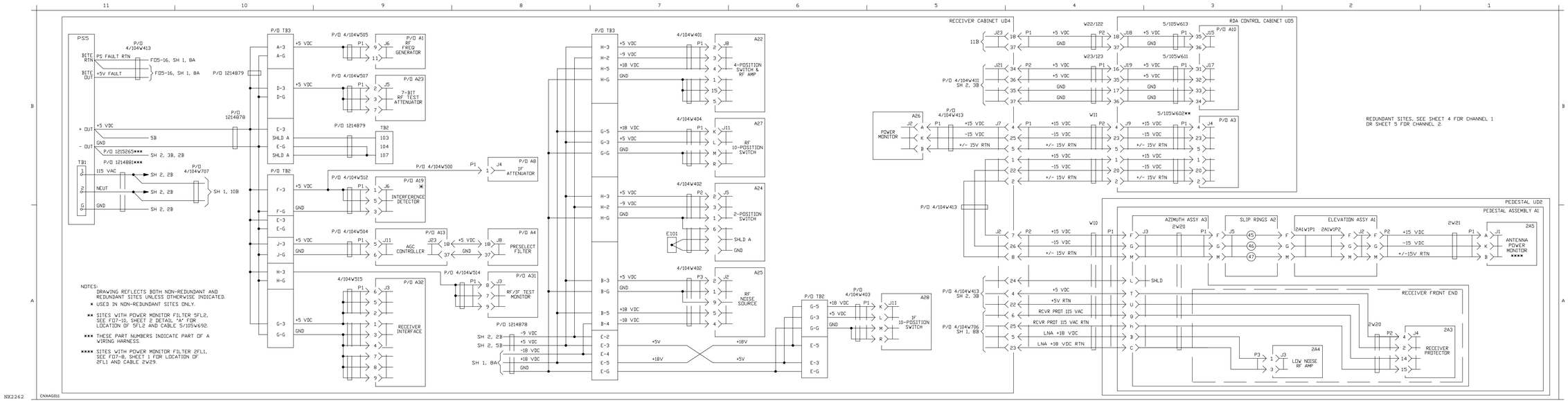


Figure FO7-13. RDA Receiver Cabinet UD4, Power Distribution Diagram (Sheet 3 of 5)

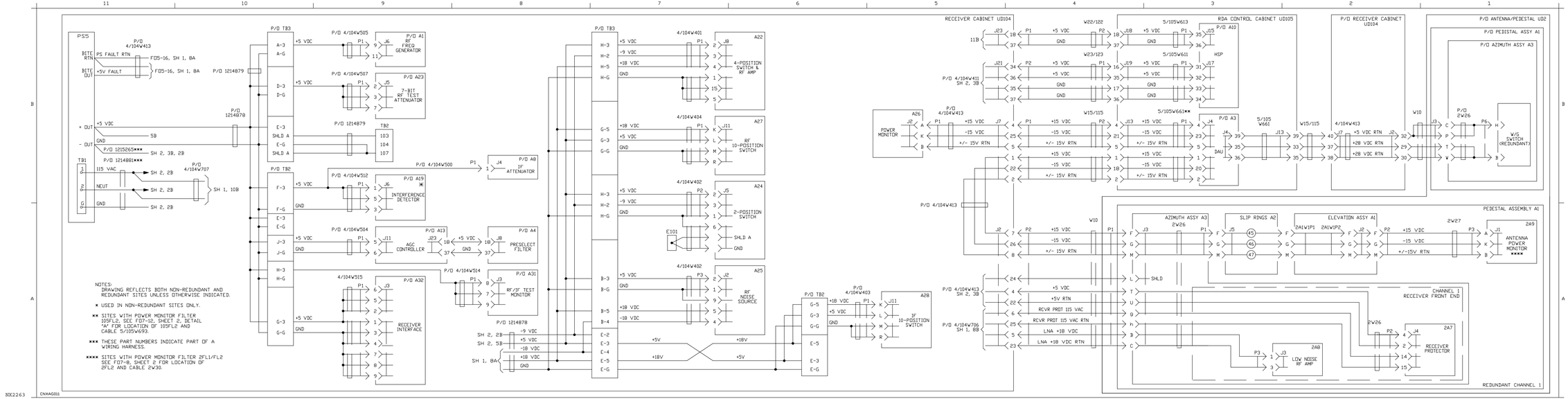


Figure FO7-13. RDA Receiver Cabinet UD4, Power Distribution Diagram (Sheet 4 of 5)

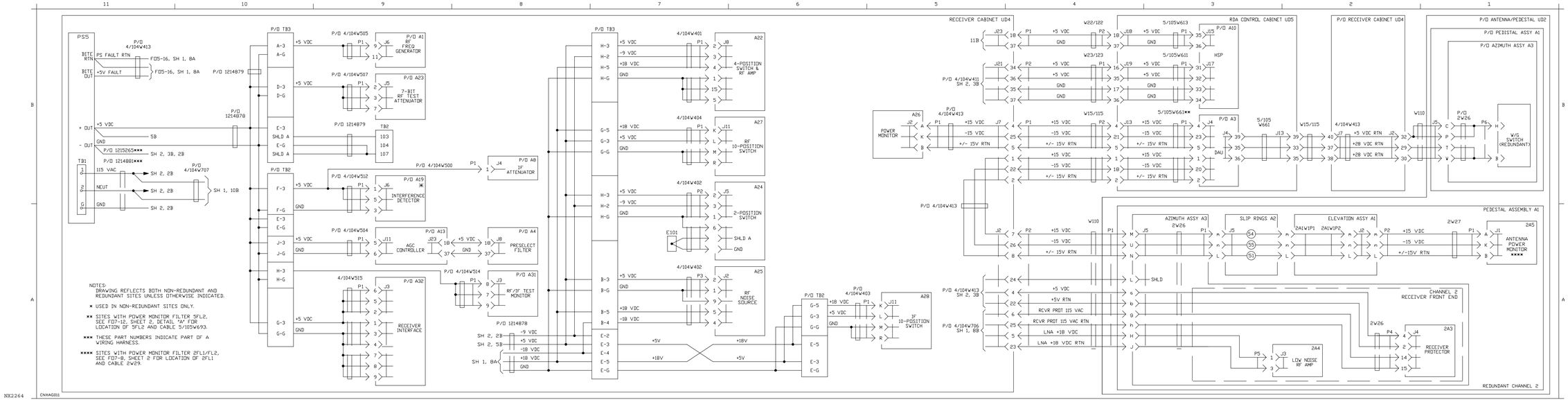


Figure FO7-13. RDA Receiver Cabinet UD4, Power Distribution Diagram (Sheet 5 of 5)

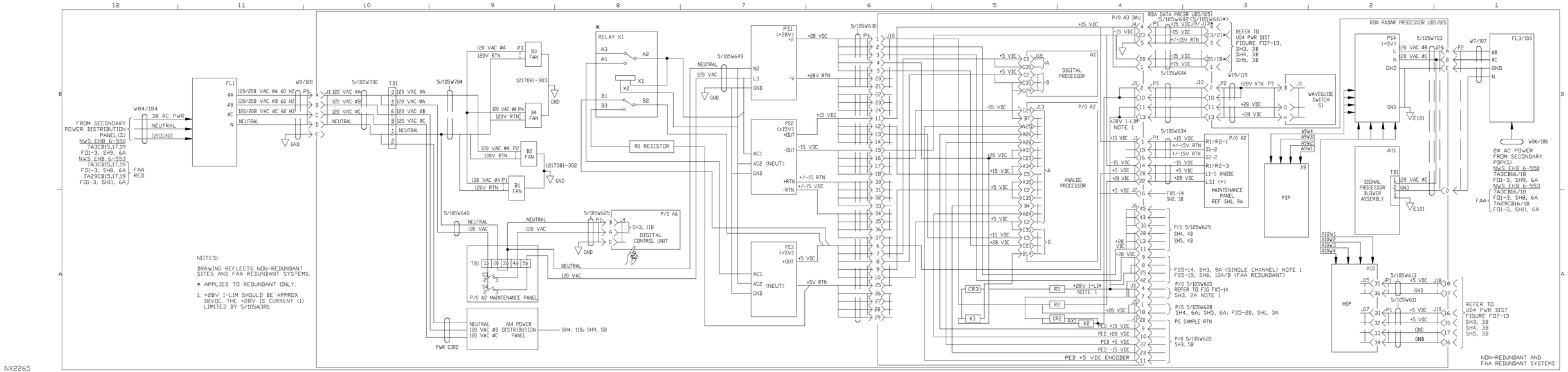


Figure FO7-14. RDA Data Processor Cabinet UD5, Power Distribution Diagram (Sheet 1 of 9)

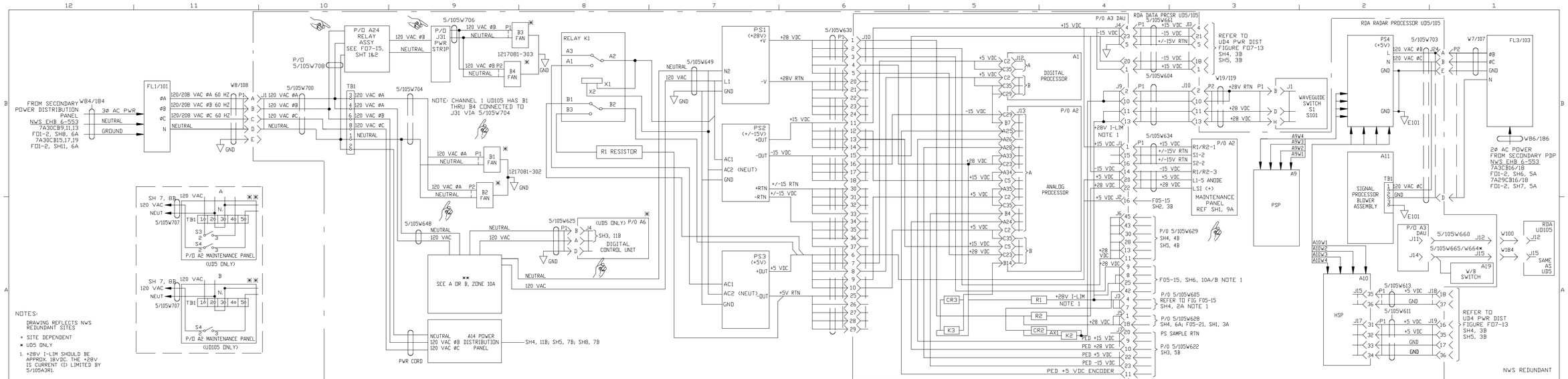


Figure FO7-14. RDA Data Processor Cabinet UD5, Power Distribution Diagram (Sheet 2 of 9)

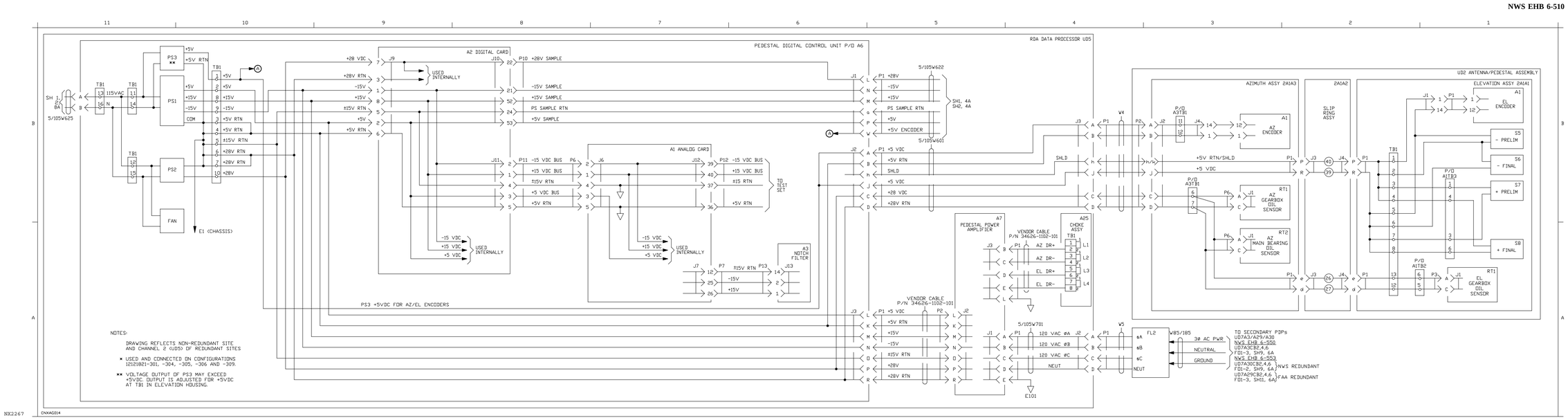


Figure FO7-14. RDA Data Processor Cabinet UD5, Power Distribution Diagram (Sheet 3 of 9)

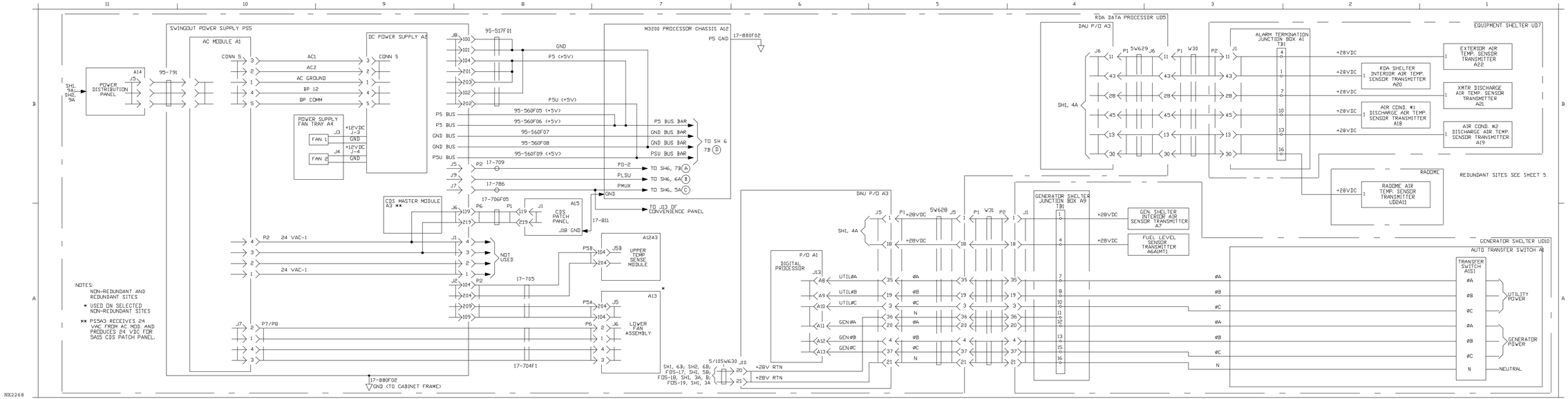


Figure FO7-14. RDA Data Processor Cabinet UD5, Power Distribution Diagram (Sheet 4 of 9)

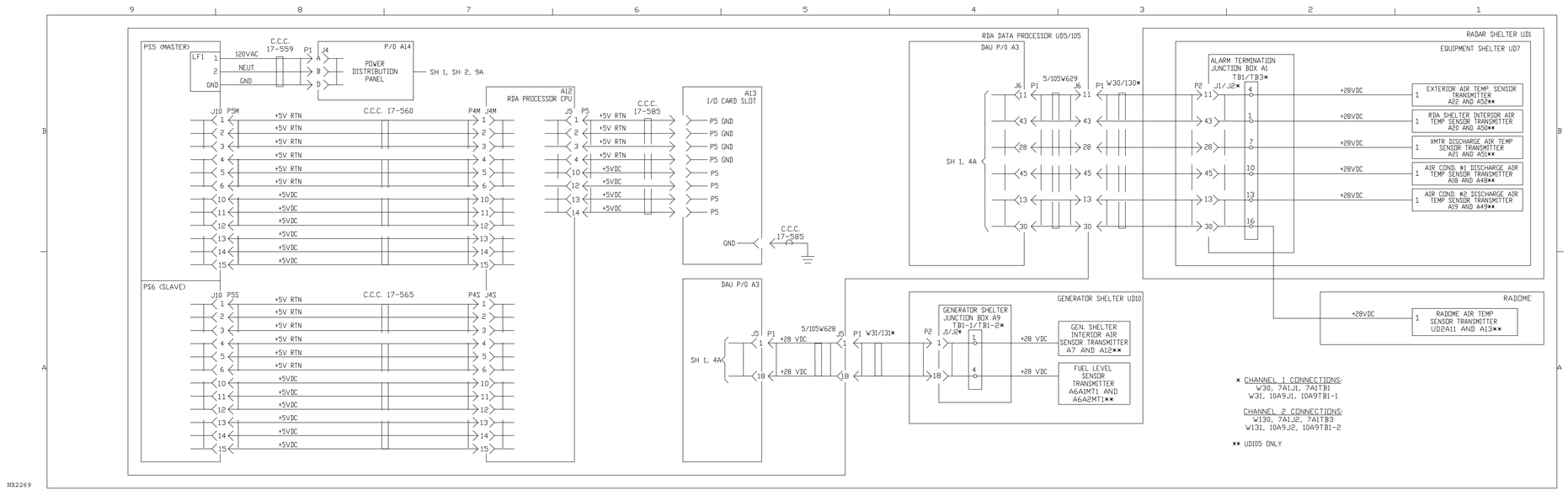


Figure FO7-14. RDA Data Processor Cabinet UD5, Power Distribution Diagram (Sheet 5 of 9)

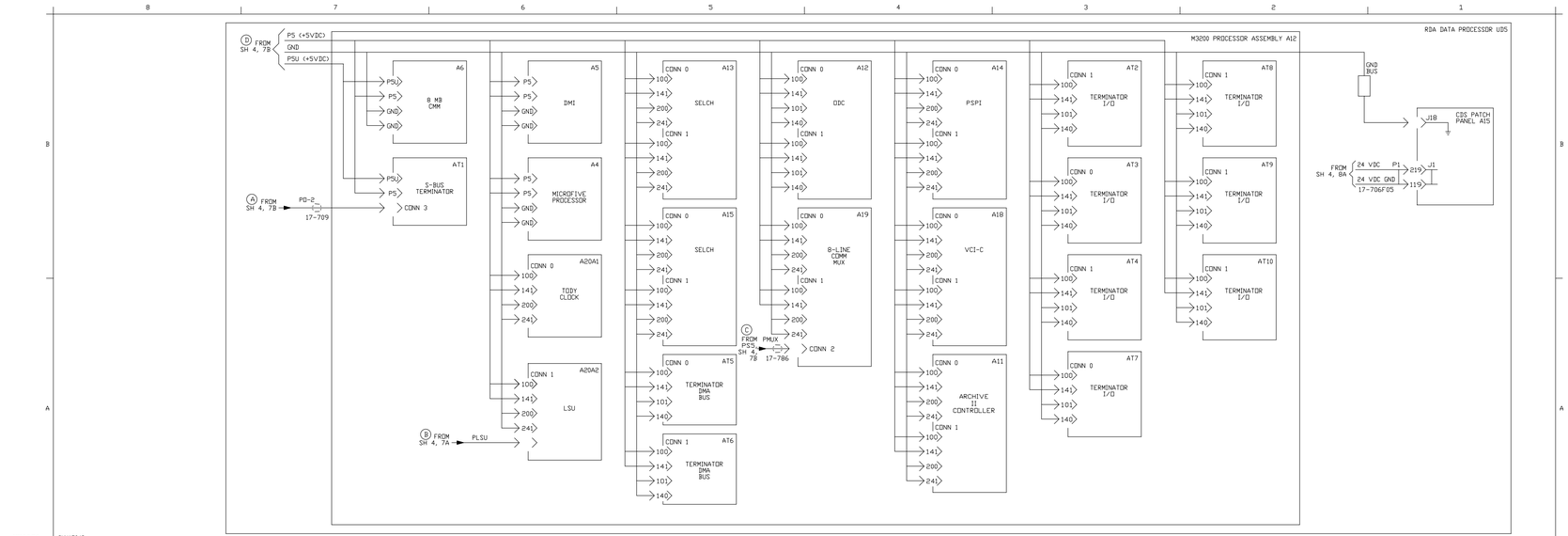


Figure FO7-14. RDA Data Processor Cabinet UD5, Power Distribution Diagram (Sheet 6 of 9)

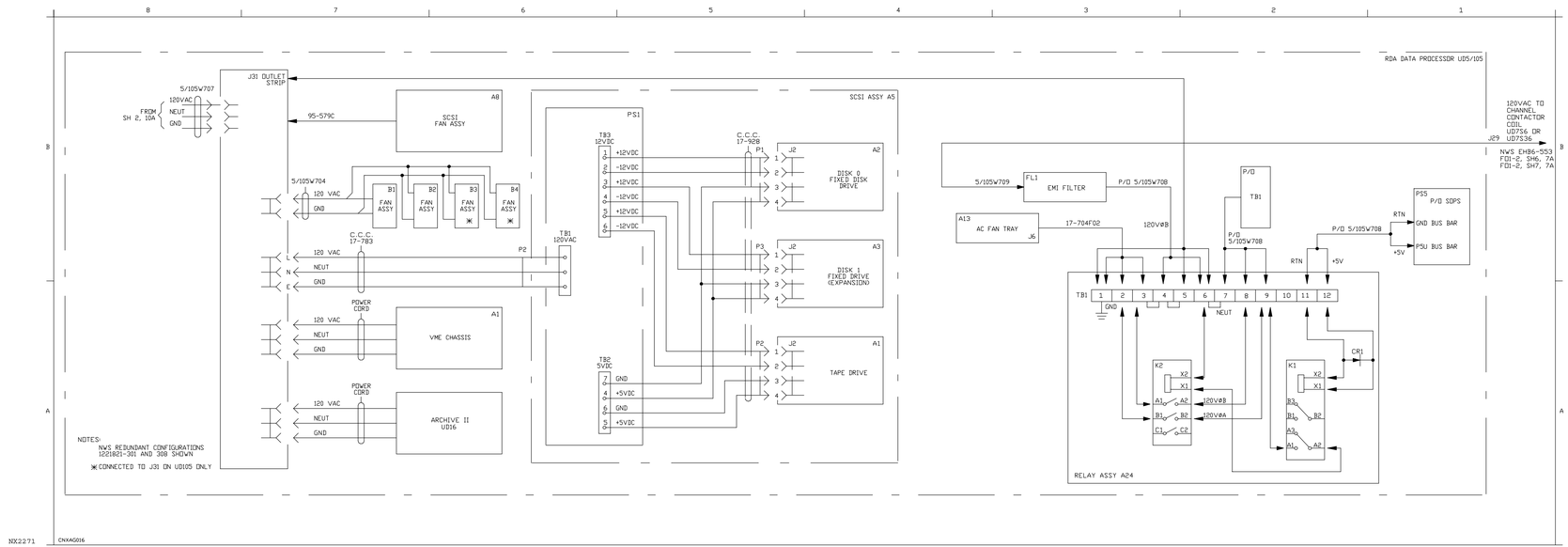


Figure FO7-14. RDA Data Processor Cabinet UD5, Power Distribution Diagram (Sheet 7 of 9)

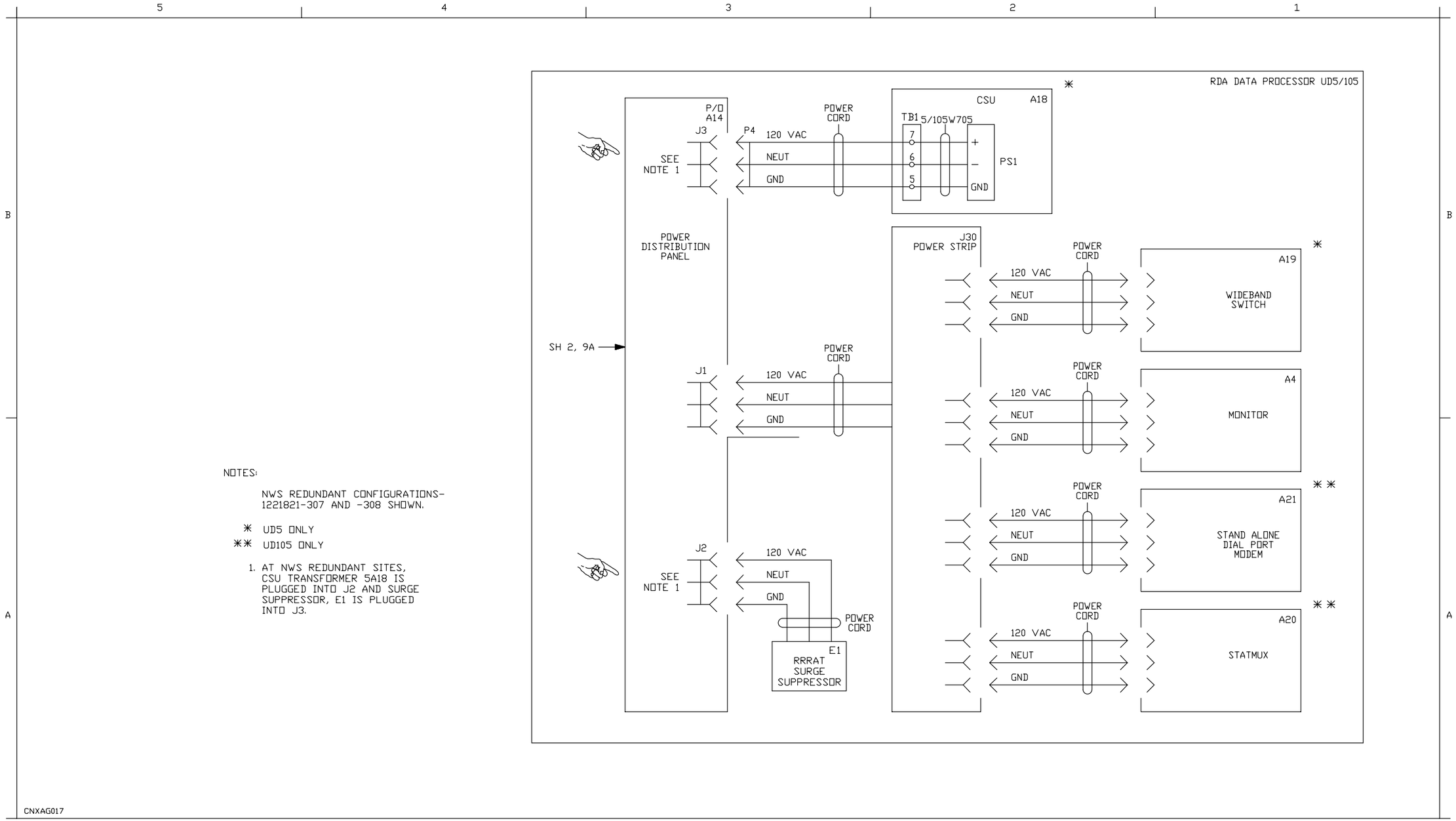


Figure FO7-14. RDA Data Processor Cabinet UD5, Power Distribution Diagram (Sheet 8 of 9)

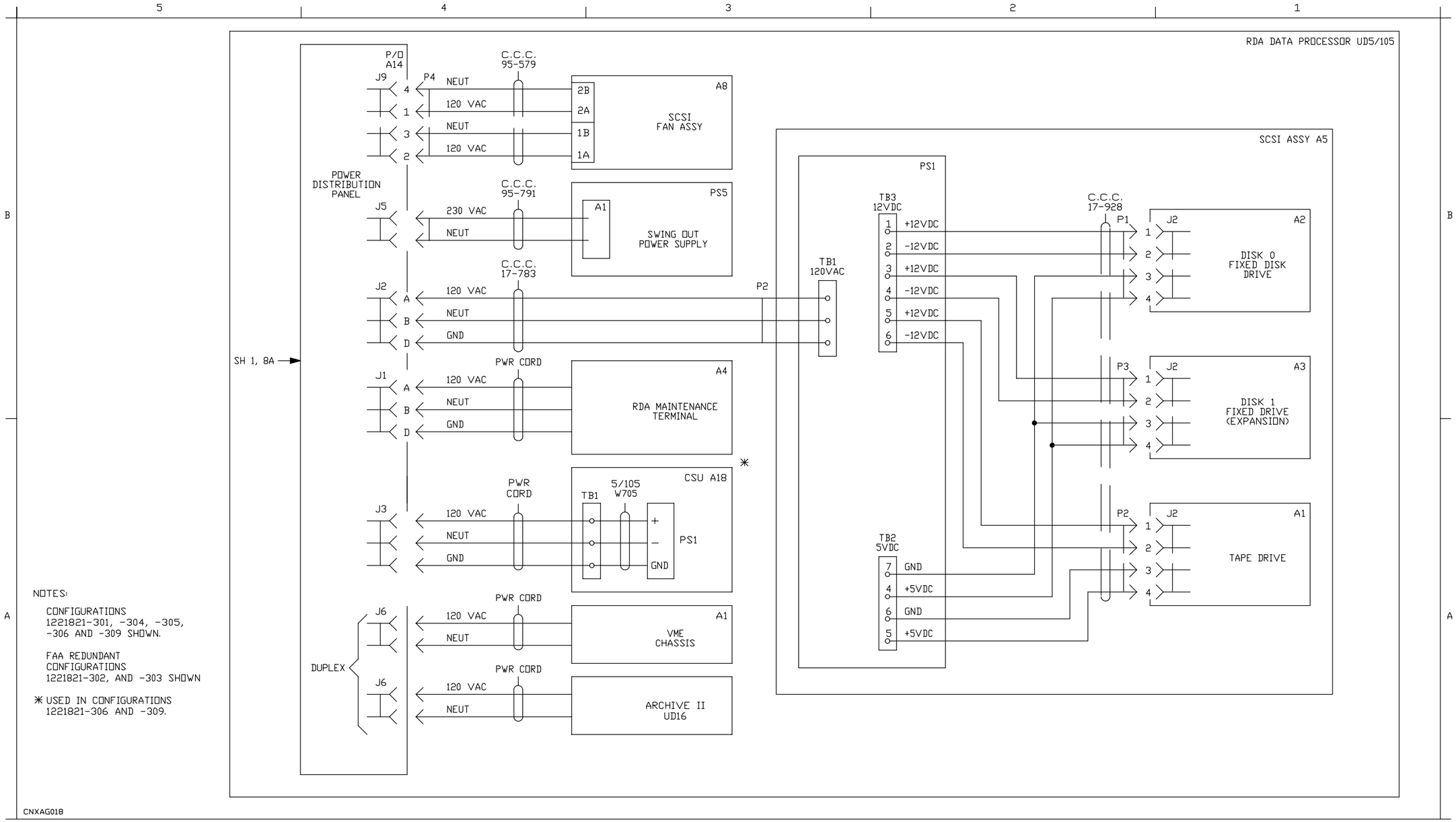


Figure FO7-14. RDA Data Processor Cabinet UD5, Power Distribution Diagram (Sheet 9 of 9)

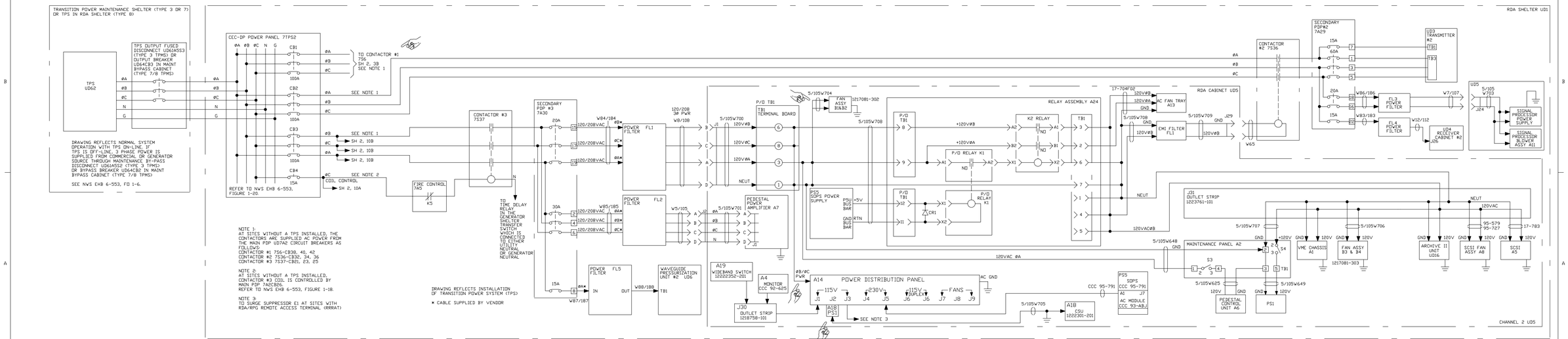


NX2274

Figure FO7-15. NWS Redundant Configuration Remote Power Shutdown (Sheet 1 of 2)

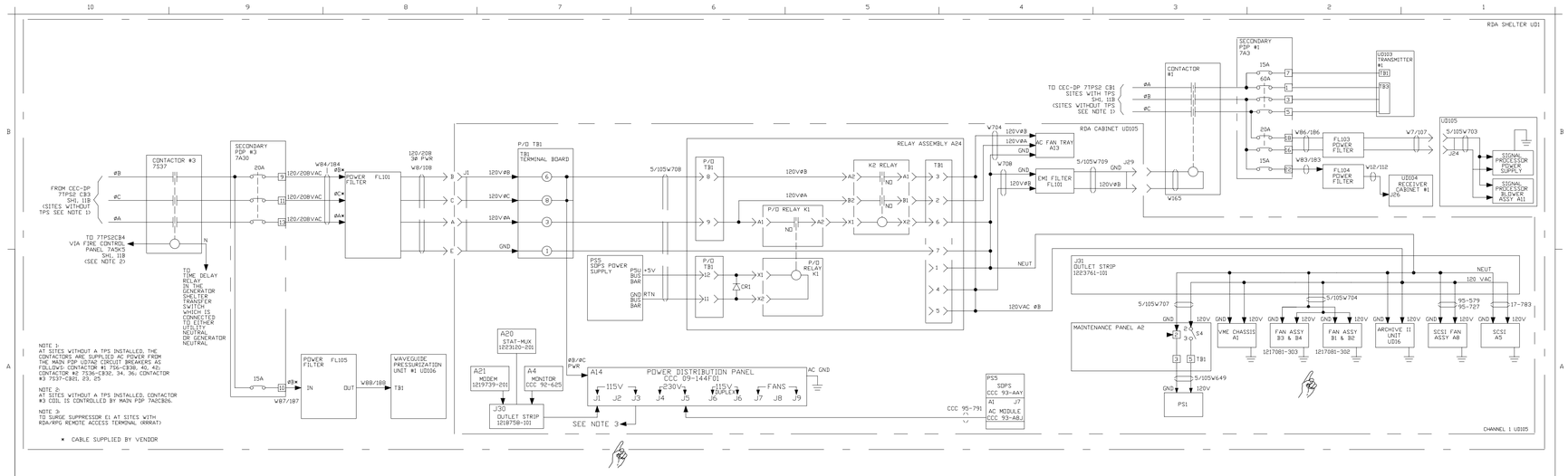


NX2275

Figure FO7-15. NWS Redundant Configuration Remote Power Shutdown (Sheet 2 of 2)

# INDEX

Subject — Paragraph, Figure, Table Number

## A

A/B Switch
Controls and Indicators . . . . . Figure 4-20, Table 4-21
Dual
Controls and Indicators . . . . . Figure 4-21, Table 4-22

A/B Switch Replacement Procedure . . . . . 6-5.63
Equipment and Tools Required . . . . . 6-5.63.1
Initial Conditions/Preliminary Setup . . . . . 6-5.63.2
Replacement Procedures . . . . . 6-5.63.3

A/D Converter . . . . . 5-2.4.2.2, 5-4.2.1.9
Test Signals . . . . . 5-4.3.10.3

A/D Converter Replacement Procedure . . . . . 6-5.14
Equipment and Tools Required . . . . . 6-5.14.1
Initial Conditions/Preliminary Setup . . . . . 6-5.14.2
Replacement Procedure . . . . . 6-5.14.3

AC Fan Tray Assembly Replacement Procedure . . . . . 6-5.76
Equipment and Tools Required . . . . . 6-5.76.1
Initial Conditions/Preliminary Setup . . . . . 6-5.76.2
Replacement Procedure . . . . . 6-5.76.3

AC Fan Tray Sensor Board Replacement Procedure . . . . . 6-5.77
Equipment and Tools Required . . . . . 6-5.77.1
Initial Conditions/Preliminary Setup . . . . . 6-5.77.2
Replacement Procedure . . . . . 6-5.77.3

AC Fan Tray Sensor Board Strapping . . . . . Figure 6-55

AC Power Distribution Panel
Controls and Indicators . . . . . Figure 4-15, Table 4-15

AC Power Module
Block Diagram . . . . . Figure 5-29
Replacement Procedure . . . . . 6-5.59.4

| Subject | Paragraph Figure, Table Number |
|---|---|
| AC Power Switching | 5-13.5 |
| Accessing Key 1 and Key 2 Commands | 4-4.4.1 |
| Accumulator Control (AC) | 5-6.6.5.7.3 |
| Accumulator Function (AF) | 5-6.6.5.7.1 |
| Accumulator Load (ALD) | 5-6.6.5.7.2 |
| Actuate/Deactivate Function | 5-6.6.6.2 |
| ACU | 5-6.3.3 |
| | 5-6.7 |
| AU Memory Address Generator | 5-6.7.7 |
| AU Multiplier/Accumulator Coefficient Data Generator | 5-6.7.8 |
| Bit Slice Arithmetic Logic Unit | 5-6.7.2 |
| Diagnostic | 5-6.9.4 |
| Interface | 5-6.9.5 |
| Mode | 5-6.9.6.1 |
| Macrocode Storage | 5-6.7.1 |
| Microprogram Address Generation | 5-6.7.5 |
| Microprogram Storage and Step Sequencer | 5-6.7.4 |
| PSP Source/Destination Select Decodes | 5-6.7.6 |
| System Clock Generation | 5-6.7.3 |
| ACU3 Card EEPROM Burn Procedure | 6-5.4.4 |
| Equipment and Tools Required | 6-5.4.4.1 |
| Initial Conditions/Preliminary Setup | 6-5.4.4.2 |
| Replacement Procedure | 6-5.4.4.3 |
| Adaptation Data | |
| Functional Block Diagram | Figure FO6-1 |
| Retrieval Procedure | 6-6.29.3 |
| Address/Microinstruction Shadow Register | 5-6.8.9.1 |
| Adjustment | |
| AGC Controller Threshold | 6-6.10.3 |
| AGC Threshold Voltage | 6-6.24.4 |
| AZ TACH | 6-6.30.4.1 |
| Azimuth D/A Converter/Tach | 6-6.30 |
| DCU Tachometer | 6-6.30.4 |
| EL TACH | 6-6.30.4.2 |
| Elevation D/A Converter/Tach | 6-6.30 |
| Elevation Pre-Limit and Final Limit Switch | 6-6.18 |
| Elevation Pre-Limit and Final Limit Switch Description | 6-6.4 |
| I/Q Phase Detector DC Offset | 6-6.24.3 |
| I/Q Phase Detector Gain | 6-6.24.2 |

Subject | Paragraph Figure, Table Number


Adjustment - Cont.
- I/Q Phase Detector Gain and DC Offset . . . . . 6-6.10.2
- IF Amplifier/Limiter Gain
  - Final . . . . . 6-6.24.6
  - Initial . . . . . 6-6.24.1
- IF Amplifier/Limiter Noise Reference Level . . . . . 6-6.10.1
- Interference Detector Threshold . . . . . 6-6.11.2
- RDA Power Monitor Bias . . . . . 6-6.14, 6-6.27
- RDADP Power Supplies . . . . . 6-6.21
- Receiver Power Supplies . . . . . 6-6.20

Advisory Messages
- Global . . . . . Table 4-37
- M3200 . . . . . Table 4-39
- SOPS . . . . . Table 4-38

AGC
- Clocks 1 and 2 Alignment . . . . . 6-6.10.4
  - Sample . . . . . Figure 6-79
- Comp Factor Memory Circuits . . . . . 5-5.4.3.5
- Comp Factor Signals . . . . . 5-5.4.3.6
- Controller . . . . . 5-4.3.8.2
- Controller Threshold Adjustment . . . . . 6-6.10.3
- Effect on Varying Inputs . . . . . Figure 5-2
- Function . . . . . 5-2.4.2.1
- Interference Test Data . . . . . 5-5.4.7.6
- Position Data . . . . . 5-5.4.3.3
- Selection Circuits . . . . . 5-5.4.3.4
- Test Data . . . . . 5-5.4.7.1
- Timing-Point Target . . . . . Figure 5-3

AGC Clocks 1 and 2 Alignment . . . . . 6-6.24.7
- Adjustment Procedure - AGC Clock 2 to Track and Hold Delay . . . . . 6-6.24.7.3
- AGC Clock 1 to AGC Clock 2 Delay . . . . . 6-6.24.7.4
- Equipment and Tools Required . . . . . 6-6.24.7.1
- Initial Conditions/Preliminary Setup . . . . . 6-6.24.7.2

AGC Controller Replacement Procedure . . . . . 6-5.16
- Equipment and Tools Required . . . . . 6-5.16.1
- Initial Conditions/Preliminary Setup . . . . . 6-5.16.2
- Replacement Procedure . . . . . 6-5.16.3

Subject — Paragraph Figure, Table Number

AGC Threshold Voltage Adjustment . . . . . 6-6.24.4
Equipment and Tools Required . . . . . 6-6.24.4.1
Initial Conditions/Preliminary Setup . . . . . 6-6.24.4.2
Procedure . . . . . 6-6.24.4.3
Alarm Area . . . . . 4-5.2.2
Alarm Catagories and Maintenance Modes . . . . . 6-3.4.2
Inoperative Alarms . . . . . 6-3.4.2.1
Maintenance Mandatory Alarms . . . . . 6-3.4.2.2
Maintenance Required Alarms . . . . . 6-3.4.2.3
Secondary Alarms . . . . . 6-3.4.2.4
Alarm Parameters . . . . . 5-4.9.1.5
Alarm Types . . . . . 6-3.4.1
Alignment
Azimuth/Elevation Encoder . . . . . 6-6.3
6-6.17
Clogged Filter . . . . . 6-6.19
Elevation Pre-Limit and Final Limit Switch . . . . . 6-6.18.3
Guard Band IF Amplifier . . . . . 6-6.25.3
Initial IF Amplifier/Limiter Gain Adjustment . . . . . 6-6.24.1.3
Interference Suppression Unit . . . . . 6-6.11
6-6.25
Receiver Channel . . . . . 6-6.10
6-6.24
RF/IF Test Monitor . . . . . 6-6.12
6-6.26
Alignment and Adjustment Procedures . . . . . 6-1.6
Azimuth/Elevation Encoder Alignment . . . . . 6-6.3
6-6.17
Clogged Filter Indicator Alignment . . . . . 6-6.5
6-6.19
DCU Azimuth and Elevation D/A Converter/Tach Adjustments . . . . . 6-6.30
Elevation Pre-Limit and Final Limit Switch Adjustment . . . . . 6-6.4
6-6.18
HP436A Power Meter Calibration . . . . . 6-6.8
6-6.22
Interference Suppression Unit Alignment . . . . . 6-6.11
6-6.25
Path Loss Measurement . . . . . 6-6.31
Power Meter Calibration . . . . . 6-6.22
RDA Data Processor Power Supply Description . . . . . 6-6.7
RDA Maintenance Procedures Initial Setup . . . . . 6-6.15

Subject — Paragraph Figure, Table Number

Alignment and Adjustment Procedures - Cont.
RDA Power Monitor Bias Adjustment . . . . . 6-6.14
6-6.27
RDA Restoration . . . . . 6-6.16
RDADP Power Supplies Adjustment . . . . . 6-6.21
Receiver Adaptation Data Entry and Display . . . . . 6-6.29
Receiver Channel Alignment . . . . . 6-6.10
6-6.24
Receiver Power Supplies Adjustment . . . . . 6-6.20
Receiver Power Supplies Adjustment Description . . . . . 6-6.6
Receiver/Signal Processor Calibration . . . . . 6-6.13
6-6.28
RF Frequency Generator Checkout . . . . . 6-6.9
6-6.23
RF/IF Test Monitor Alignment . . . . . 6-6.12
6-6.26
Setup Restoration Procedures . . . . . 6-6.2
ALU Internal Logic . . . . . Figure 5-17
Analog Processor Module . . . . . 6-5.41
Analog Signal
Characteristics . . . . . Table 5-22
Reception and Scaling Function . . . . . 5-9.7.1
Analog Status Data Monitoring . . . . . 5-2.6.1
5-9.2.4
Functional Description . . . . . 5-9.7
Analog Signal Reception and Scaling Function . . . . . 5-9.7.1
Temperature Sensors . . . . . 5-9.7.2
Functional Flow Diagram . . . . . Figure FO5-20
Angle Rate Match Flag . . . . . 5-1 1.9.9
ANT CMD Relay Signal . . . . . 5-9.3.3.4
ANT1 . . . . . 6-4.3.1
ANT2 . . . . . 6-4.3.2
ANT3 . . . . . 6-4.3.3
ANT4 . . . . . 6-4.3.4
ANT5 . . . . . 6-4.3.5
ANT6 . . . . . 6-4.3.6
ANT7 . . . . . 6-4.3.7
ANT8 . . . . . 6-4.3.8

Subject — Paragraph Figure, Table Number


Antenna . . . . . 5-2.3
5-1 1.3.6
5-14.2.21.1
Control . . . . . 5-13.2
Feed . . . . . 1-2.2.2.2
Feed Assembly . . . . . 5-4.3.1
Functional Block Diagram . . . . . Figure FO5-30
Limits and Protections . . . . . 5-1 1.2.5
Position Data Interface . . . . . 5-1 1.3.2
5-1 1.5
Functional Flow Diagram . . . . . Figure FO5-28
Reflector . . . . . 1-2.2.2.1

Antenna Positioning
Overview . . . . . 5-1 1.2
Antenna Limits and Protections . . . . . 5-1 1.2.5
Azimuth and Elevation Housing . . . . . 5-1 1.2.2
Azimuth Servo Motor . . . . . 5-1 1.2.3
RDASC Processor . . . . . 5-1 1.2.1
Self-Tests . . . . . 5-1 1.2.7
Status and Safety Elements . . . . . 5-1 1.2.6
Tachometers . . . . . 5-1 1.2.4
Servo . . . . . 5-1 1.9.8

Antenna Positioning Electronics . . . . . 5-2.5
Antenna Position Data Interface Function . . . . . 5-1 1.5
Antenna Positioning Overview . . . . . 5-1 1.2
Functional Description . . . . . 5-1 1.3
Antenna . . . . . 5-1 1.3.6
Antenna Position Data Interface . . . . . 5-1 1.3.2
Microprocessor . . . . . 5-1 1.3.7
RDA Servo Interface . . . . . 5-1 1.3.5
Servo Fault Monitoring . . . . . 5-1 1.3.3
Servo Loop Electronics . . . . . 5-1 1.3.4
Servo Microprocessor Control . . . . . 5-1 1.3.1
Off-Line Diagnostics . . . . . 5-1 1.10
On-Line Performance Monitoring . . . . . 5-1 1.9
Peripheral Interface Adapter . . . . . 5-2.5.5
RDA Servo Interface . . . . . 5-1 1.8
RDASC/Servo Interface . . . . . 5-2.5.4
Servo Antenna Position Data Interface . . . . . 5-2.5.2
Servo Control Microprocessor . . . . . 5-2.5.1
Servo Fault Monitoring Function . . . . . 5-1 1.6

Subject | Paragraph Figure, Table Number


Antenna Positioning Electronics - Cont.
- Servo Loop Electronics . . . . . 5-2.5.3, 5-11.7
- Servo Microprocessor Control Function . . . . . 5-11.4

Antenna Power Monitor Replacement Procedure . . . . . 6-5.52.22
- Equipment and Tools Required . . . . . 6-5.52.22.1
- Initial Conditions/Preliminary Setup . . . . . 6-5.52.22.2
- Replacement Procedure . . . . . 6-5.52.22.3

Antenna/Pedestal . . . . . 1-2.2.2, Figure 1-6
- Antenna Feed . . . . . 1-2.2.2.2
- Antenna Reflector . . . . . 1-2.2.2.1
- Assembly Waveguide Components . . . . . 5-10.3
- Drives . . . . . 1-2.2.2.5
- Feed Support Structure . . . . . 1-2.2.2.3
- Group ICD . . . . . Figure FO7-8
- LRU Replacement . . . . . 6-5.52
  - Antenna Power Monitor . . . . . 6-5.52.22
  - Azimuth Data Package Replacement Procedure . . . . . 6-5.52.9
  - Azimuth Encoder Replacement Procedure . . . . . 6-5.52.9
  - Azimuth Gearbox Drive Motor Replacement Procedure . . . . . 6-5.52.11
  - Azimuth Gearbox Replacement Procedure . . . . . 6-5.52.10
  - Azimuth Manual Drive Assembly Replacement Procedure . . . . . 6-5.52.7
  - Azimuth Manual Drive Interlock Switch Replacement Procedure . . . . . 6-5.52.8
  - Azimuth Rotary Joint Replacement Procedure . . . . . 6-5.52.16
  - Azimuth Stow Pin Switch Replacement Procedure . . . . . 6-5.52.12
  - Bandpass Filter . . . . . 6-5.52.20
  - Circulator . . . . . 6-5.52.18
  - Coax Cable . . . . . 6-5.52.21
  - Elevation Data Package Replacement Procedure . . . . . 6-5.52.3
  - Elevation Encoder Replacement Procedure . . . . . 6-5.52.3
  - Elevation Gearbox Drive Motor Replacement Procedure . . . . . 6-5.52.5
  - Elevation Gearbox Replacement Procedure . . . . . 6-5.52.4
  - Elevation Manual Drive Assembly Replacement Procedure . . . . . 6-5.52.1
  - Elevation Manual Drive Stow Pin Switch Replacement Procedure . . . . . 6-5.52.2
  - Elevation Stow Pin Switch Replacement Procedure . . . . . 6-5.52.6
  - Low Noise Amplifier Replacement Procedure . . . . . 6-5.52.14
  - Main Bearing Oil Sensor Replacement Procedure . . . . . 6-5.52.15
  - Passive Diode Limiter . . . . . 6-5.52.19
  - Receiver Protector Replacement Procedure . . . . . 6-5.52.13
  - Slip Ring Replacement Procedure . . . . . 6-5.52.17
- Pedestal Assembly . . . . . 1-2.2.2.4

Subject — Paragraph Figure, Table Number

Antenna/Pedestal - Cont.
Pedestal Disable . . . . . 1-2.2.2.7
Radar Pedestal . . . . . 1-2.2.2.6
Secondary Flowchart . . . . . Figure 6-6
Weight Breakdown . . . . . Table 1-4
Antenna/Pedestal Functional Group . . . . . 6-4.3
ANT1 . . . . . 6-4.3.1
ANT2 . . . . . 6-4.3.2
ANT3 . . . . . 6-4.3.3
ANT4 . . . . . 6-4.3.4
ANT5 . . . . . 6-4.3.5
ANT6 . . . . . 6-4.3.6
ANT7 . . . . . 6-4.3.7
ANT8 . . . . . 6-4.3.8
Archive II
Controller . . . . . 5-7.7.5
Interface . . . . . 1-3.3.9.8
Procedures . . . . . Table 4-43
Archiving (ARCH) . . . . . 4-5.4.9
Arithmetic Control Unit . . . . . 5-6.3.3
5-6.7
Downloading of Microinstructions . . . . . 5-6.3.3.2
Macrocodes . . . . . 5-6.3.3.1
RALU . . . . . 5-6.3.3.3
Arithmetic Unit . . . . . 5-6.6
Function . . . . . 5-6.3.2
Data Selection and Special Function Logic . . . . . 5-6.3.2.2
Multiplier/Accumulator Function . . . . . 5-6.3.2.1
Status Flags . . . . . 5-6.3.2.3
Memory Address Generator . . . . . 5-6.7.7
Base Adder . . . . . 5-6.7.7.4
DEST = MEM ADRS RGTR FILE Signal . . . . . 5-6.7.7.2
RGTR FILE OUTPUT DATA Bus . . . . . 5-6.7.7.3
SELECT MEM ADRS GEN AS DEST Signal . . . . . 5-6.7.7.1
Memory Generation Control . . . . . 5-6.6.1
Asynchronous Reception and Demultiplexing . . . . . 5-9.3.1
AU . . . . . 5-6.6
Clock and Trigger Generation . . . . . 5-6.6.3
Conditional Activate/Deactivate Function . . . . . 5-6.6.7
Configuration Switches . . . . . 5-6.6.1.1

| Subject | Paragraph Figure, Table Number |
|---|---|
| AU - Cont. | |
| Diagnostic Multiplexers | 5-6.9.3.4 |
| Function | 5-6.3.2 |
| MAC Result Status Selection and Testing | 5-6.6.6 |
| Memory Address | 5-6.3.1.3<br>5-6.9.3.1 |
| Memory Generation Control | 5-6.6.1 |
| Multiplier/Accumulator Coefficient Data Generator | 5-6.7.8 |
| Multiplier/Accumulator Function | 5-6.6.5 |
| Multiplier/Accumulator Input Data Selection | 5-6.6.4 |
| Output Data Selection and Special Function Logic | 5-6.6.8 |
| Bit-Set Register | 5-6.6.8.5 |
| Odd Parity | 5-6.6.8.1 |
| Result Bus IM | 5-6.6.8.3 |
| Result Bus RE | 5-6.6.8.4 |
| Write Mode | 5-6.6.8.2 |
| Ping-Pong/Scratch Pad Memory | 5-6.6.2 |
| Wrap Around Signal | 5-6.5.1.2 |
| AU Wrap Around | 5-5.4.6.4.3 |
| AU1 Diagnostics Interface | 5-6.9.3 |
| AU Diagnostic Multiplexers | 5-6.9.3.4 |
| AU Memory Address | 5-6.9.3.1 |
| Diagnostic Sample Data | 5-6.9.3.2 |
| Real Value Output of Accumulator | 5-6.9.3.3 |
| Audible Alarm Logic | 5-9.3.4 |
| Auto-Transfer Switch | 5-12.2.1 |
| Automatic A/B Wideband Communication Switch | 1-2.2.5.8 |
| Controls and Indicators | Figure 4-17<br>Table 4-17 |
| Automatic Gain Control | 5-4.2.1.6<br>5-4.3.8 |
| AGC Controller | 5-4.3.8.2 |
| Coaxial Delay Line | 5-4.3.8.1 |
| IF Attenuator | 5-4.3.8.3 |
| Automatic Wideband Communication Switch Replacement Procedure | 6-5.81 |
| Equipment and Tools Required | 6-5.81.1 |
| Initial Conditions/Preliminary Setup | 6-5.81.2 |
| Replacement Procedure | 6-5.81.3 |
| Average Power Measurement | 5-3.9.2.2 |
| AZ D/A OUT Signal | 5-11.7.2 |

Subject | Paragraph Figure, Table Number

AZ TACH Adjustment . . . . . 6-6.30.4.1

Azimuth and Elevation Axis Servo Loop Configuration . . . . . Figure 5-27

Azimuth and Elevation D/A Converter/Tach Adjustments . . . . . 6-6.30
D/A Converter Adjustments . . . . . 6-6.30.3
Azimuth . . . . . 6-6.30.3.1
Elevation . . . . . 6-6.30.3.2
Equipment and Tools Required . . . . . 6-6.30.1
Initial Conditions/Preliminary Setup . . . . . 6-6.30.2
Tach Adjustment . . . . . 6-6.30.4

Azimuth and Elevation Housing . . . . . 5-1 1.2.2

Azimuth Assembly . . . . . Figure 6-38
Figure 6-62

Azimuth D/A Converter Adjustment . . . . . 6-6.30.3.1

Azimuth Data Package . . . . . Figure 6-39

Azimuth Data Package Replacement Procedure . . . . . 6-5.52.9
Equipment and Tools Required . . . . . 6-5.52.9.1
Initial Conditions/Preliminary Setup . . . . . 6-5.52.9.2
Replacement Procedure . . . . . 6-5.52.9.3

Azimuth Encoder Replacement Procedure . . . . . 6-5.52.9
Equipment and Tools Required . . . . . 6-5.52.9.1
Initial Conditions/Preliminary Setup . . . . . 6-5.52.9.2
Replacement Procedure . . . . . 6-5.52.9.3

Azimuth Gearbox Drive Motor Replacement Procedure . . . . . 6-5.52.1 1
Equipment and Tools Required . . . . . 6-5.52.1 1.1
Initial Conditions/Preliminary Setup . . . . . 6-5.52.1 1.2
Replacement Procedure . . . . . 6-5.52.1 1.3

Azimuth Gearbox Motor Removal/Installation . . . . . Figure 6-40

Azimuth Gearbox Replacement Procedure . . . . . 6-5.52.10
Equipment and Tools Required . . . . . 6-5.52.10.1
Initial Conditions/Preliminary Setup . . . . . 6-5.52.10.2
Replacement Procedure . . . . . 6-5.52.10.3

Azimuth Gearbox/Data Package . . . . . Figure 6-39

Azimuth Manual Drive Assembly Replacement Procedure . . . . . 6-5.52.7
Equipment and Tools Required . . . . . 6-5.52.7.1
Initial Conditions/Preliminary Setup . . . . . 6-5.52.7.2
Replacement Procedure . . . . . 6-5.52.7.3

Subject | Paragraph Figure, Table Number

Azimuth Manual Drive Interlock Switch Replacement Procedure . . . . . 6-5.52.8
Equipment and Tools Required . . . . . 6-5.52.8.1
Initial Conditions/Preliminary Setup . . . . . 6-5.52.8.2
Replacement Procedure . . . . . 6-5.52.8.3
Azimuth Rotary Joint Electrical Characteristics . . . . . Table 1-7
Azimuth Rotary Joint Replacement Procedure . . . . . 6-5.52.16
Azimuth Servo Motor . . . . . 5-1 1.2.3
Azimuth Stow Pin Assembly . . . . . Figure 6-60
Azimuth Stow Pin Switch Replacement Procedure . . . . . 6-5.52.12
Equipment and Tools Required . . . . . 6-5.52.12.1
Initial Conditions/Preliminary Setup . . . . . 6-5.52.12.2
Replacement Procedure . . . . . 6-5.52.12.3
Azimuth/Elevation Encoder Alignment . . . . . 6-6.17
Description . . . . . 6-6.3
Equipment and Tools Required . . . . . 6-6.17.1
Initial Conditions/Preliminary Setup . . . . . 6-6.17.2
Procedure . . . . . 6-6.17.3
Azimuth/Elevation Power Amp Replacement Procedure . . . . . 6-5.46
Equipment and Tools Required . . . . . 6-5.46.1
Initial Conditions/Preliminary Setup . . . . . 6-5.46.2
Replacement Procedure . . . . . 6-5.46.3

## B

Backup Format Options . . . . . Table 4-25
Backup Procedure
Disk/Tape . . . . . 4-3.2.1
T4 . . . . . Table 4-24
Format Options . . . . . Table 4-25
Bandpass Filter Replacement Procedure . . . . . 6-5.52.20
Equipment and Tools Required . . . . . 6-5.52.20.1
Initial Conditions/Preliminary Setup . . . . . 6-5.52.20.2
Replacement Procedure . . . . . 6-5.52.20.3
Bandpass Filtering . . . . . 5-4.3.3.1
Base Adder . . . . . 5-6.7.7.4
Basic Concepts . . . . . 4-1.3.1
Basic Timing Diagram . . . . . Figure 5-13
Batch Cut Processing . . . . . 5-6.2.5

| Subject | Paragraph Figure, Table Number |
|---|---|
| Batch Mode | 5-5.3.2.9 |
| Batch Waveform Timing Signals | Figure 5-10 |
| Batch Waveforms | 1-3.4.6.4<br>5-5.4.6.2 |
| Beam Coverage Pattern | 5-2.8.3.2 |
| Bi-Directional Crossguide Coupler Replacement Procedure | 6-5.70 |
| Equipment and Tools Required | 6-5.70.1 |
| Initial Conditions/Preliminary Setup | 6-5.70.2 |
| Replacement Procedures | 6-5.70.3 |
| Bias Distortion | 5-4.3.10.2 |
| Bit Slice Arithmetic Logic Unit | 5-6.7.2 |
| 4-Bit ALU | 5-6.7.2.1 |
| Carry-Look-Ahead Generator | 5-6.7.2.2 |
| Status Signals | 5-6.7.2.3 |
| Bit-Set Register | 5-6.6.8.5 |
| Block Diagram | |
| AC Power Module | Figure 5-29 |
| Adaptation Data, Functional | Figure FO6-1 |
| Antenna Positioning Electronics, Functional | Figure FO5-24 |
| Antenna, Functional | Figure FO5-30 |
| CPU | Figure 5-21 |
| HSP (Video Prescaling), Functional | Figure FO5-10 |
| PSP (Overview), Functional | Figure FO5-11 |
| RDA Group | Figure FO5-1 |
| RDASC Interface, Functional | Figure FO5-13 |
| RDASC Processor, Functional | Figure FO5-12 |
| Receiver, Functional | Figure FO5-4 |
| Redundant RDA Group | Figure FO5-2 |
| Signal Processor | Figure 5-12 |
| Transmitter, Functional | Figure FO5-3 |
| VCI-C Board | Figure 5-22 |
| VCI-V Board | Figure 5-23 |
| Wideband Board, Detailed | Figure 5-24 |
| Break Key | 4-1.3.4.4 |
| Break Point Processing | 5-6.9.7 |
| Bus Transfers | 5-7.4.2 |


## C


| | |
|---|---|
| Cable Bus | 5-8.4 |

Subject — Paragraph Figure, Table Number


Cable From/To Information . . . . . Table 7-1
Cable Wiring Data . . . . . 7-2
Cabling and Connector Problems . . . . . 6-3.2.9
Cache Operation . . . . . 5-7.4.7
Calibration
- Adapters and Test Cable . . . . . Table 6-34
- CW Test Path . . . . . 6-6.28.3.1
- CW Test Signal Injection . . . . . 6-6.13.1
- Delayed Klystron Path . . . . . 6-6.28.3.5
- Delayed Klystron Sampling . . . . . Table 6-35
- Functional Description . . . . . 4-7.4
  - Complex Spectrum Measurement . . . . . 4-7.4.1
  - Generate Clutter Map . . . . . 4-7.4.2
  - Sun Source Checks . . . . . 1-3.5.2.3, 4-7.4.3
- Klystron Output Path . . . . . 6-6.28.3.5.1
- Linear and Log Channel Reflectivity . . . . . 5-4.9.1
- MISC CAL LOSS (SP/LP) KLYSTRON OUT TARGET . . . . . 6-6.28.3.5.3
- Noise Path and Noise Source . . . . . 6-6.28.3.3
- Power Meter . . . . . 6-6.22
- Procedure . . . . . 4-7.6.3
- Processing . . . . . 5-14.2.5
- Receiver/Signal Processor . . . . . 6-6.13, 6-6.28
- Reflectivity . . . . . 6-6.28.1.1, Figure 6-83
- RF Drive Path . . . . . 6-6.28.3.2
- RF Power Sensor . . . . . 6-6.13.3
- RF Test Attenuator . . . . . 6-6.28.3.4
- Sampling Phase . . . . . 6-6.28.3.5.2
- Solar . . . . . 6-6.28.3.6
- System Noise . . . . . 6-6.13.2
- Tests . . . . . 1-3.5.2
  - Clutter Bypass Map Generation . . . . . 1-3.5.2.2
  - Complex Spectrum Measurement . . . . . 1-3.5.2.1
  - Sun Source Checks . . . . . 1-3.5.2.3

Calibration of Adapters and Test Cable . . . . . 6-6.28.3.3.2.1
Calibration of MISC CAL LOSS (SP/LP) KLYSTRON OUT TARGET
- Equipment and Tools Required . . . . . 6-6.28.3.5.3.1
- Short Pulse Procedure . . . . . 6-6.28.3.5.3.2

| Subject | Paragraph Figure, Table Number |
|---|---|
| Calibration of the Noise Path and Noise Source | |
| Equipment and Tools Required | 6-6.28.3.3.1 |
| Procedure | 6-6.28.3.3.2 |
| Capture Filter Codes | 5-5.4.5.5 |
| Card Removal/Installation | 6-5.2.6.1 |
| Carry-Look-Ahead Generator | 5-6.7.2.2 |
| CDS | |
| Bus | 5-7.10.5 |
| Bus Timing | 5-7.3.2 |
| Command Set | 4-4.4 |
| Command Syntax | 4-4.5 |
| Command, Entering | 4-4.3 |
| Hardware Element | 5-7.10.2 |
| Interactive Mode Procedure | |
| Entering | 4-4.2.1 |
| Exiting | 4-4.2.2 |
| Key Commands | Table 4-33 |
| Master Circuitry | 5-7.10.3 |
| Master Module Replacement | 6-5.59.7 |
| CDS Function | 5-7.10 |
| CDS Bus | 5-7.10.5 |
| CDS Hardware Elements | 5-7.10.2 |
| CDS Master Circuitry | 5-7.10.3 |
| CDS Operating Modes | 5-7.10.1 |
| CDS Patch Panel | 5-7.10.6 |
| Slave Circuitry | 5-7.10.4 |
| System Port/CDS Patch Panel Path | 5-7.10.7 |
| CDS Master Module | 5-12.3.2.1.1.5 |
| Controls and Indicators | 4-2.3.3<br>Figure 4-6<br>Table 4-5 |
| LED Status | Table 4-6 |
| Strapping/Switch Settings | Figure 6-43 |
| CDS Patch Panel | Figure 6-45 |
| CDS Patch Panel Replacement Procedure | 6-5.61 |
| Equipment and Tools Required | 6-5.61.1 |
| Initial Conditions/Preliminary Setup | 6-5.61.2 |
| Replacement Procedure | 6-5.61.3 |
| Center Frequency | Table 6-24 |

Subject — Paragraph Figure, Table Number


Central Processing Unit . . . . . 5-2.9.1
Function . . . . . 5-7.4
Bus Transfers . . . . . 5-7.4.2
Cache Operations . . . . . 5-7.4.7
Input/Output . . . . . 5-7.4.6
Memory Operations . . . . . 5-7.4.4
Messages, Broadcasts and Direct I/O on F-Path . . . . . 5-7.4.5
Parity . . . . . 5-7.4.3
Processing Element . . . . . 5-7.4.8
S-Bus . . . . . 5-7.4.1

Change Command . . . . . 5-14.2.7

Channel Noise . . . . . 5-4.9.7.1

Channel Service Unit . . . . . 1-2.2.5.7
Controls and Indicators . . . . . Figure 4-16
Table 4-16

Channel Service Unit Replacement Procedure . . . . . 6-5.64
Equipment and Tools Required . . . . . 6-5.64.1
Initial Conditions/Preliminary Setup . . . . . 6-5.64.2
Replacement Procedure . . . . . 6-5.64.3

Charging Switch . . . . . 5-3.4.2

Charging Transformer . . . . . 5-3.4.3

Checks During Radial Processing . . . . . 5-5.5.1

Checks During Startup, Full Restart, Fast Startup . . . . . 5-5.5.2

CI . . . . . 5-5.4.2

CIB Write Strobe Generation . . . . . 5-5.4.5.2

Circuit Protection . . . . . 5-12.3.2.1.1.8

Circulator . . . . . 5-3.6.2
6-5.52.18
Equipment and Tools Required . . . . . 6-5.52.18.1
Initial Conditions/Preliminary Setup . . . . . 6-5.52.18.2
Overtemp . . . . . 5-10.4.4
Interlock . . . . . 5-9.3.5.3
Replacement Procedure . . . . . 6-5.52.18.3

Clock
Distribution . . . . . 5-5.4.5.6
Inputs . . . . . 5-4.8.3.2
Time Set Procedure RDADP . . . . . 4-3.3
Table 4-28

Subject | Paragraph Figure, Table Number

Clogged Filter Indicator . . . . . 6-6.19
Figure 6-68
Alignment Procedure . . . . . 6-6.19.3
Description . . . . . 6-6.5
Equipment and Tools Required . . . . . 6-6.19.1
Initial Conditions/Preliminary Setup . . . . . 6-6.19.2

Clutter Bypass Map Generation . . . . . 1-3.5.2.2

Clutter Filter . . . . . 5-5.3.1.3
5-5.3.2.2
Bypass Filter Map Example . . . . . Figure 5-6
Bypass Map . . . . . 5-5.4.4.3
Automatically by the RDASOT Program . . . . . 5-5.4.4.3.1
Manually by the MSCF Operator for UD70/170 RPG . . . . . 5-5.4.4.3.3
Control . . . . . 5-5.4.4.2
Bypass Control . . . . . 5-5.4.4.2.1
Maps . . . . . 5-5.4.4.2.3
Notch Width Control . . . . . 5-5.4.4.2.2
Volume Scanning . . . . . 5-5.4.4.2.4
Imaginary . . . . . 5-6.3.1.1
Notch Width Control Map . . . . . 5-5.4.4.4
Clutter Censor Zones . . . . . 5-5.4.4.4.2
Default . . . . . 5-5.4.4.4.1
RDASC Program . . . . . 5-5.4.4.4.3
PSP Interface . . . . . 5-5.4.4.5
Real . . . . . 5-6.3.1.1

Clutter Filtering . . . . . 5-5.4.4.1

Clutter Map . . . . . 5-5.3.2.5
5-5.4.4.7
Circuit . . . . . 5-5.3.2.8
Information . . . . . 5-2.7.2.2

Clutter Notch Width Map Types . . . . . Figure 5-7

Clutter Suppression Check . . . . . 5-4.9.4

CMM Strapping . . . . . Figure 6-25

Coax Cable Replacement Procedure . . . . . 6-5.52.21
Equipment and Tools Required . . . . . 6-5.52.21.1
Initial Conditions/Preliminary Setup . . . . . 6-5.52.21.2
Replacement Procedure . . . . . 6-5.52.21.3

Subject | Paragraph Figure, Table Number


Coax Delay Line Replacement Procedure . . . . . 6-5.10
Equipment and Tools Required . . . . . 6-5.10.1
Initial Conditions/Preliminary Setup . . . . . 6-5.10.2
Replacement Procedure . . . . . 6-5.10.3

Coaxial Delay Line . . . . . 5-4.3.8.1

Col-Contamination Over Entire Useable Area of Monitor Display . . . . . Figure 6-4

Cold Startup . . . . . 5-2.7.2.1
5-14.2.17
File Loading Failure . . . . . 5-14.2.17.1
Full Restart Command . . . . . 5-1 1.9.5
RDA Application Software . . . . . 5-14.2.17.4
RDA Control/Operating State . . . . . 5-14.2.17.2
State File . . . . . 5-14.2.17.3

Command . . . . . 4-5.3
AC - Accumulator Control . . . . . 5-6.6.5.7.3
AF - Accumulator Function . . . . . 5-6.6.5.7.1
ALD - Accumulator Load . . . . . 5-6.6.5.7.2
Channel To Standby Command . . . . . 5-14.2.22.2
Command Data . . . . . 5-1 1.7.1
Entry Line . . . . . 4-5.2.8
FT - Feed Through Enable . . . . . 5-6.6.5.7.3
Generation . . . . . 5-5.4.5.4
Input Error Messages . . . . . 4-4.3.2
Register . . . . . 5-6.7.5.1
Switchover . . . . . 5-14.2.20.6
Syntax . . . . . 4-5.3.1

Commands
Issuing Commands from the Command Line . . . . . 4-5.3.2
Issuing Commands from the Menus . . . . . 4-5.3.3
KILLSOT . . . . . 4-7.2.3.2.2
RDA Control . . . . . Table 4-53
RDA Maintenance Terminal . . . . . Table 4-41
Term . . . . . 4-7.2.3.2.1

Commands and Format
Key 0 . . . . . Table 4-34
Key 1 . . . . . Table 4-35
Key 2 . . . . . Table 4-36

Common RS-232 Interface Off-line Test Program . . . . . 4-6.3.2

Communications LRU Replacement Information . . . . . 6-5.51

Subject | Paragraph Figure, Table Number

Complex Data (I, Q) . . . . . 5-5.3.1.1
Complex Spectrum Measurement . . . . . 4-7.4.1
Component Location and Identification . . . . . 6-1.7
Confidence Test Error Messages . . . . . 6-4.7.3
Configuration . . . . . 4-1.4.6
  Menus . . . . . 4-1.4.6.3
CONN-0/CONN-1 Layout and RACK0/TACK0 Strapping . . . . . Figure 6-19
Consumables/Expendables . . . . . 1-4.7
Contiguous Doppler Waveforms
  With Range Ambiguity Resolution . . . . . 1-3.4.6.2
    Cut Processing . . . . . 5-6.2.4
  Without Range Ambiguity Resolution . . . . . 1-3.4.6.3
    Cut Processing . . . . . 5-6.2.3
Contiguous Surveillance
  Cut Processing . . . . . 5-6.2.2
  Waveforms . . . . . 1-3.4.6.1
Contiguous Waveforms . . . . . 5-5.4.6.1
  Timing Signals . . . . . Figure 5-9
Continuous Updating . . . . . 5-6.8.4
Control Adapter . . . . . 5-3.5.1
Control and Monitoring . . . . . 5-2.2.1
Control Commands and Write Data . . . . . 5-6.3.4.1
Control Drive Signal . . . . . Table 5-4
Control Interface . . . . . 5-3.5.3
5-5.2.3.2
Control Logic . . . . . 5-3.5.2
Control Pedestal . . . . . 1-3.3.7
4-7.5.1
Control RDA . . . . . 1-3.3.5
  Function . . . . . 5-14.2.19.4
  Program Function Description
    RDA States . . . . . 5-14.2
    Volume Coverage Control . . . . . 5-14.3
Control Receiver/Signal Processor . . . . . 4-7.5.2
Control Signal Processor . . . . . 1-3.3.6
Controlling Channel . . . . . 5-14.2.22.5

Subject — Paragraph Figure, Table Number

Controls and Indicators
A/B Switch . . . . . Figure 4-20
Table 4-21
Dual . . . . . Figure 4-21
Table 4-22
A/B Switch and Dual A/B Switch . . . . . 4-2.3.17
AC Power Distribution Panel . . . . . 4-2.3.12
Figure 4-15
Table 4-15
Automatic A/B Wideband Communication Switch . . . . . Figure 4-17
Table 4-17
Automatic Wideband Communication Switch . . . . . 4-2.3.14
CDS Master Module . . . . . 4-2.3.3
Figure 4-6
Table 4-5
Channel Service Unit . . . . . 4-2.3.13
Figure 4-16
Table 4-16
Control/Indicator Nomenclature Column . . . . . 4-2.1.2
Description . . . . . 4-2.1.5
Dial Port Modem, Standalone . . . . . 4-2.3.16
Figure 4-19
Table 4-19
Figure and Index No. Column . . . . . 4-2.1.1
Function Column . . . . . 4-2.1.3
Interlocks . . . . . 4-2.5
Maintenance Panel . . . . . 4-2.3.1
Normal Position/State Column . . . . . 4-2.1.4
Pedestal Power Amplifier Unit . . . . . 4-2.3.5
Figure 4-8
Table 4-8
Power Supply Assemblies . . . . . 4-2.3.11
Radar Receiver . . . . . 4-2.2
RDA Maintenance Panel . . . . . Figure 4-4
Table 4-3
RDA Maintenance Terminal . . . . . 4-2.3.4
Figure 4-7
Table 4-7
RDA Power Supplies . . . . . Figure 4-14
Table 4-14
RDADP . . . . . 4-2.3
Receiver . . . . . Table 4-2

| Subject | Paragraph Figure, Table Number |
|---|---|
| Controls and Indicators - Cont. | |
| SCSI Assembly | 4-2.3.6<br>Figure 4-9<br>Table 4-9 |
| STATMUX | 4-2.3.15<br>Figure 4-18<br>Table 4-18 |
| Swing-Out Power Subsystem | Figure 4-5<br>Table 4-4 |
| VCI-C Board | Figure 4-13<br>Table 4-13 |
| VCI-V Board | Figure 4-12<br>Table 4-12 |
| VME Assembly | Figure 4-10<br>Table 4-10 |
| VME Chassis | 4-2.3.7 |
| VME Wideband Board | 4-2.3.8<br>Figure 4-11<br>Table 4-11 |
| VMEbus to Concurrent I/O Bus Interface Board | 4-2.3.9<br>4-2.3.10<br>Figure 4-12<br>Figure 4-13<br>Table 4-12<br>Table 4-13 |
| Wideband Cabinet Assembly | 4-2.4 |
| Correcting Command Entries | 4-4.3.1 |
| Correction of System Noise Temperature | 6-6.28.2.3 |
| Corrective Maintenance | 6-1.5 |
| CPCI 01 Interface Requirements | 1-3.3.9 |
| Archive II Interface | 1-3.3.9.8 |
| CPCI 10 Interface | 1-3.3.9.5 |
| Maintenance Console Interfaces | 1-3.3.9.1 |
| Pedestal Interface | 1-3.3.9.2 |
| RDA System Operational Test Interface | 1-3.3.9.6 |
| Signal Processing Interface | 1-3.3.9.3 |
| Target Processor for CPCI 01 | 1-3.3.9.7 |
| Wideband Data Link Interface | 1-3.3.9.4 |
| CPCI 01 RDASC Software | 5-11.9.4 |
| CPCI 02 RDA Signal Processing Software Program | 1-3.4 |
| Functions vs. Subfunctions | Table 5-11 |

| Subject | Paragraph Figure, Table Number |
|---|---|
| CPCI 06 Interface Requirements | 1-3.5.4 |
| CPCI 06 RDASOT Software Program | 1-3.5 |
| CPCI 07 Data Processing Diagnostic Program | 1-3.6 |
| CPCI 10 Interface | 1-3.3.9.5 |
| CPU | 4-1.3.1.1 |
| Block Diagram | Figure 5-21 |
| Creates Parameters List | 1-3.3.3.1 |
| CRT Status Line | 4-5.2.9 |
| Crystal Detectors | 5-3.6.4 |
| CSU Replacement Procedure | 6-5.64 |
| Equipment and Tools Required | 6-5.64.1 |
| Initial Conditions/Preliminary Setup | 6-5.64.2 |
| Replacement Procedure | 6-5.64.3 |
| CTRL and Q Keys | 4-1.3.4.2 |
| CTRL and S Keys | 4-1.3.4.1 |
| CTRL and V Keys | 4-1.3.4.5 |
| Cursor Control Keys | 4-1.4.4.1 |
| CW Path Check | 6-6.28.3.3.2.2 |
| CW Substitution Reflectivity Accuracy Verification | |
| AWIPS | 6-6.28.2.5 |
| Equipment and Tools Required | 6-6.28.2.4.1 |
| MSCF and RPG | 6-6.28.2.5 |
| Procedure | 6-6.28.2.4.2 |
| PUP or AWIPS | 6-6.28.2.4 |
| CW Test Path Calibration | 6-6.28.3.1 |
| Equipment and Tools Required | 6-6.28.3.1.1 |
| Procedure | 6-6.28.3.1.2 |
| CW Test Signal Injection Calibration | 6-6.13.1 |


## D


| | |
|---|---|
| Data Acquisition | 1-2.2.5.2 |
| Interface | |
| Description | 5-9.1.3 |
| Functional Description | 5-9.2 |
| Analog Status Data Monitoring | 5-9.2.4 |
| Asynchronous Reception and Demultiplexing | 5-9.3.1 |
| Audible Alarm Logic | 5-9.3.4 |

Subject — Paragraph Figure, Table Number

Data Acquisition - Cont.
Interface
Functional Description - Cont.
DAU/RDASC Status Data Interface . . . . . 5-9.2.2
Discrete Status Data Monitoring . . . . . 5-9.2.3
Pedestal Control . . . . . 5-9.3.6
RDASC/DAU Command Data Interface . . . . . 5-9.3
RDASC/DAU Interface . . . . . 5-9.2.1
Relay Driver Logic . . . . . 5-9.3.3
Time-Out Interlock Logic . . . . . 5-9.3.2
Transmitter Control . . . . . 5-9.3.5
Overview . . . . . 5-9.1.1
Purpose . . . . . 5-9.1.2
Data Links . . . . . 6-5.3.2.1.2
Data Processing Diagnostic Program (CPCI 07) . . . . . 1-3.6
Data Recording . . . . . 6-6.28.1.6
Data Selection and Special Function Logic . . . . . 5-6.3.2.2
DAU BITE Display . . . . . 4-7.5.3
DAU Controller Module and Analog Processor Module Replacement Procedure . . . . . 6-5.41
Equipment and Tools Required . . . . . 6-5.41.1
Initial Conditions/Preliminary Setup . . . . . 6-5.41.2
Replacement Procedure . . . . . 6-5.41.3
DAU Diagnostic . . . . . 1-3.5.1.3, 4-7.3.3
DAU to Processor Data . . . . . Table 5-19
Analog . . . . . Table 5-21
Discrete . . . . . Table 5-20
DAU/RDASC Status Data Interface . . . . . 5-2.6.3, 5-9.2.2
Functional Description . . . . . 5-9.5
Master Timing . . . . . 5-9.5.2
Reception and Selection Circuitry . . . . . 5-9.5.1
RS-232 Asynchronous Transmission . . . . . 5-9.5.4
UART Transmitter Control and Strobe Generation . . . . . 5-9.5.3
Functional Flow Diagram . . . . . Figure FO5-16
Davit Crane and Maintenance Hatch, Lifting with . . . . . 6-5.1.4
Equipment and Tools Required . . . . . 6-5.1.4.1
Initial Conditions/Preliminary Setup . . . . . 6-5.1.4.2
Procedure . . . . . 6-5.1.4.3

Subject | Paragraph Figure, Table Number

DC Offset and Noise Calibration . . . . . 5-4.9.5
DC Power Supply Output Destinations . . . . . Table 5-30
DC Power Supply Replacement Procedure . . . . . 6-5.59.6
DCU Analog Card Replacement Procedure . . . . . 6-5.42
Equipment and Tools Required . . . . . 6-5.42.1
Initial Conditions/Preliminary Setup . . . . . 6-5.42.2
Replacement Procedure . . . . . 6-5.42.3
DCU Analog PWA . . . . . Figure 6-84
DCU Digital Card Replacement Procedure . . . . . 6-5.43
Equipment and Tools Required . . . . . 6-5.43.1
Initial Conditions/Preliminary Setup . . . . . 6-5.43.2
Replacement Procedure . . . . . 6-5.43.3
De-Select All Subtests . . . . . 4-7.2.5.2
Dedicated Control/Function Keys . . . . . 4-1.4.4.3
Default Notch Width Map Adaptation Data Example . . . . . Table 5-10
Delayed Klystron Output Test Sample . . . . . 5-4.7.4.3
Delayed Klystron Path Calibration . . . . . 6-6.28.3.5
Delayed Klystron Sampling Calibration . . . . . Table 6-35
Designates Destination . . . . . 1-3.3.3.2
DEST = MEM ADRS RGTR FILE Signal . . . . . 5-6.7.7.2
DEST BUS . . . . . 5-6.7.5.4
Destination 7 . . . . . 5-5.4.1.1
Destination 7 Input Word . . . . . Table 5-9
Destination 7 Registers . . . . . 5-5.4.5.3
Destination 8 . . . . . 5-5.4.1.2
Destination 9 . . . . . 5-5.4.1.3
Destination 10 . . . . . 5-5.4.1.4
Destination 11 . . . . . 5-5.4.1.5
Destination 13 . . . . . 5-5.4.1.6
Destination File Structure . . . . . Figure 5-18
Destination Files . . . . . 5-5.4.1
Destination Write Data Selection and Distribution . . . . . 5-6.8.7
Detected Test Sample Selection and Processing . . . . . 5-4.8.3
Clock Inputs . . . . . 5-4.8.3.2
RF/IF Test Monitor . . . . . 5-4.8.3.1

| Subject | Paragraph Figure, Table Number |
|---|---|
| Detection Processor | 5-4.5.4 |
| Echo Signals | 5-4.5.4.1 |
| Log Video Signal | 5-4.5.4.2 |
| Diagnostic | |
| ACU | 5-6.9.4 |
| ACU Interface | 5-6.9.5 |
| ACU Mode, EEPROM Microcode Storage and WCSR Download Control | 5-6.9.6.1 |
| AU Multiplexers | 5-6.9.3.4 |
| AU1 Interface | 5-6.9.3 |
| CMM (06-325) | 4-6.3.8 |
| | 4-6.4.9 |
| | 4-6.4.10 |
| DAU | 4-7.3.3 |
| Force Data | 5-6.9.2.2 |
| Functional Description RDA M3200 Processor | 4-6.3 |
| HSP | 4-7.3.7 |
| IOC | 5-6.9.8 |
| IPC (06-297) | 4-6.3.5 |
| | 4-6.4.6 |
| ISC Function | 5-6.9.2.4 |
| ISC Interface | 5-6.9.2 |
| | 5-6.9.2.1 |
| Loader Executive (06-145) | 4-6.3.3 |
| M3200 Cache Diagnostic (06-321) | 4-6.3.7 |
| | 4-6.4.8 |
| M3200 Processor Diagnostic (06-319) | 4-6.3.6 |
| | 4-6.4.7 |
| Microinstruction Multiplexer | 5-6.9.8.4 |
| Off-Line | 5-9.9 |
| | 5-1 1.10 |
| Off-Line Fault Isolation | 5-4.10 |
| Off-Line Tests | 5-5.6 |
| Pedestal | 4-7.3.4 |
| | 5-1 1.10.1 |
| PSP | 4-7.3.6 |
| | 5-6.3.5.1 |
| PSPI | 4-6.3.4 |
| | 4-6.4.5 |
| RDA Control, System Operation | 4-4 |
| RDA Group | 4-6.2 |
| Optical Disk System (91-539) | 4-6.3.9 |
| RDA M3200 Processor Procedures | 4-6.4 |

Subject — Paragraph Figure, Table Number

Diagnostic - Cont.
RDASC-PSP Interface . . . . . 5-6.3.5.2 5-6.9.1
RDASOT Function Diagnostics . . . . . 5-2.9.4
DAU . . . . . 5-2.9.4.4
HSP . . . . . 5-2.9.4.8
Pedestal . . . . . 5-2.9.4.5
PSP . . . . . 5-2.9.4.7
Receiver . . . . . 5-2.9.4.6
Tower/Utility . . . . . 5-2.9.4.3
Transmitter . . . . . 5-2.9.4.2
Receiver . . . . . 4-7.3.5
Sample Data . . . . . 5-6.9.3.2
Test Functional Description . . . . . 4-7.3
Test Procedure . . . . . 4-7.6.2
Test Program Procedures . . . . . 6-1.1 1
Tests . . . . . 1-3.5.1
DAU . . . . . 1-3.5.1.3
HSP . . . . . 1-3.5.1.7
Pedestal . . . . . 1-3.5.1.4
PSP . . . . . 1-3.5.1.6
Receiver . . . . . 1-3.5.1.5
Tower/Utility . . . . . 1-3.5.1.2
Transmitter . . . . . 1-3.5.1.1
Tower/Utility . . . . . 4-7.3.2
Transmitter . . . . . 4-7.3.1
VMEbus to Concurrent I/O Bus Interface . . . . . 4-6.3.1 4-6.4.4

Dial Modem Replacement Procedure, Standalone . . . . . 6-5.79
Equipment and Tools Required . . . . . 6-5.79.1
Initial Conditions/Preliminary Setup . . . . . 6-5.79.2
Replacement Procedure . . . . . 6-5.79.3

Dial Port Modem, Standalone
Controls and Indicators . . . . . Figure 4-19 Table 4-19
Setup Procedure . . . . . 6-6.35
Equipment and Tools Required . . . . . 6-6.35.1
Initial Conditions/Preliminary Setup . . . . . 6-6.35.2
Procedure . . . . . 6-6.35.3

DIGN DIM MODE and DIGN SMI MODE Commands . . . . . 5-6.8.6.4

Direct I/O Operation . . . . . 5-7.6.3

Subject — Paragraph Figure, Table Number

Direct Memory Operation . . . . . 5-7.6.4
Discrete Status Data Monitoring . . . . . 5-2.6.2
5-9.2.3
Functional Description . . . . . 5-9.6
Functional Flow Diagram
Kohler . . . . . Figure FO5-18
Onan . . . . . Figure FO5-17
Disk Drive Replacement Procedure . . . . . 6-5.66.5
Equipment and Tools Required . . . . . 6-5.66.5.1
Initial Conditions/Preliminary Setup . . . . . 6-5.66.5.2
Replacement Procedure . . . . . 6-5.66.5.3
Disk Errors . . . . . 4-8.4
Disk/Tape Backup Procedure . . . . . 4-3.2.1
Table 4-24
Display File Names Procedure . . . . . 4-3.2.3
Table 4-27
Display Performance Data (DIPD) Status Monitoring . . . . . 4-5.4.8
Display/Enter Log Data (DILD/ENLD) . . . . . 4-5.4.7
DMA Bus . . . . . 5-7.6.2
DMI Function . . . . . 5-7.6
Direct I/O Operation . . . . . 5-7.6.3
Direct Memory Operation . . . . . 5-7.6.4
DMA Bus . . . . . 5-7.6.2
MUX Bus . . . . . 5-7.6.1
DMI Strapping . . . . . Figure 6-26
Download PSP . . . . . 4-7.5.4
Downloading of Microinstructions . . . . . 5-6.3.3.2
Dual A/B Switch Replacement Procedure . . . . . 6-5.63

## E

Echo Signals, Detection Processor . . . . . 5-4.5.4.1
EEPROM Burn Procedure ACU3 Card . . . . . 6-5.4.4
EEPROM Microcode Installation Procedure . . . . . Table 6-17
EEPROM Microcode Storage and WCSR Download Control . . . . . 5-6.9.6
ACU Diagnostic Mode . . . . . 5-6.9.6.1
Microinstruction Word Shadow Register . . . . . 5-6.9.6.2

| Subject | Paragraph Figure, Table Number |
|---|---|
| EL Tach Adjustment | 6-6.30.4.2 |
| Electrical Equipment Shelter | 1-2.2.7 |
| Waveguide Components | 5-10.2 |
| Electromechanical Assemblies | 6-5.1.1 |
| Elevation Cut Startup | 5-14.3.3.2 |
| Elevation D/A Converter Adjustment | 6-6.30.3.2 |
| Elevation Data Package and Elevation Encoder Replacement Procedure | 6-5.52.3 |
| Equipment and Tools Required | 6-5.52.3.1 |
| Initial Conditions/Preliminary Setup | 6-5.52.3.2 |
| Replacement Procedure | 6-5.52.3.3 |
| Elevation Gearbox Drive Motor Replacement Procedure | 6-5.52.5 |
| Equipment and Tools Required | 6-5.52.5.1 |
| Initial Conditions/Preliminary Setup | 6-5.52.5.2 |
| Replacement Procedure | 6-5.52.5.3 |
| Elevation Gearbox/Motor Removal/Installation | Figure 6-36 |
| Elevation Gearbox Replacement Procedure | 6-5.52.4 |
| Equipment and Tools Required | 6-5.52.4.1 |
| Initial Conditions/Preliminary Setup | 6-5.52.4.2 |
| Replacement Procedure | 6-5.52.4.3 |
| Elevation Layer | 5-6.4.2 |
| Startup | 5-6.4.5<br>Figure 5-15 |
| Stop | 5-6.4.6<br>Figure 5-16 |
| Elevation Manual Drive Assembly Replacement Procedure | 6-5.52.1 |
| Equipment and Tools Required | 6-5.52.1.1 |
| Initial Conditions/Preliminary Setup | 6-5.52.1.2 |
| Replacement Procedure | 6-5.52.1.3 |
| Elevation Manual Drive Stow Pin Switch Replacement Procedure | 6-5.52.2 |
| Equipment and Tools Required | 6-5.52.2.1 |
| Initial Conditions/Preliminary Setup | 6-5.52.2.2 |
| Replacement Procedure | 6-5.52.2.3 |
| Elevation Pre-Limit and Final Limit Switch Adjustment | 6-6.4<br>6-6.18 |
| Alignment Procedure | 6-6.18.3 |
| Equipment and Tools Required | 6-6.18.1 |
| Initial Conditions/Preliminary Setup | 6-6.18.2 |
| Elevation Rotary Joint Electrical Characteristics | Table 1-8 |

Subject | Paragraph Figure, Table Number

Elevation Stow Pin Switch Replacement Procedure . . . . . 6-5.52.6
Equipment and Tools Required . . . . . 6-5.52.6.1
Initial Conditions/Preliminary Setup . . . . . 6-5.52.6.2
Replacement Procedure . . . . . 6-5.52.6.3
Elevation Switch . . . . . Figure 6-63
Elevation/Azimuth Manual Drive Assembly . . . . . Figure 6-35
Emergency/Recovery Procedures
Disk Errors . . . . . 4-8.4
Introduction . . . . . 4-8.1
OS/32 Error Description . . . . . 4-8.5
Paused Task Recovery Procedure . . . . . 4-8.7
Power Down Reset . . . . . 4-8.6
Software Reinitialization (Reboot) Procedure . . . . . 4-8.3
Terminal Malfunction Recovery Procedure . . . . . 4-8.2
Enable Interference Suppression Unit/Disable Interference Suppression Unit (ENAI/DISI) 4-5.4.4.3
Enclosure Assembly Replacement Procedure . . . . . 6-5.66.3
Equipment and Tools Required . . . . . 6-5.66.3.1
Initial Conditions/Preliminary Setup . . . . . 6-5.66.3.2
Replacement Procedure . . . . . 6-5.66.3.3
End of Cut . . . . . 5-14.3.3.4
End of PRF Sector . . . . . 5-14.3.3.3
End of Scan Period . . . . . 5-14.3.3.7
Equipment and Tools Required
6 dB Attenuator Pad Replacement Procedure . . . . . 6-5.34.1
10 dB Attenuator Pad Replacement Procedure . . . . . 6-5.35.1
20 dB Directional Coupler Replacement Procedure . . . . . 6-5.40.1
40 dB Directional Coupler Replacement Procedure . . . . . 6-5.39.1
A/B Switch Replacement Procedure . . . . . 6-5.63.1
A/D Converter Replacement Procedure . . . . . 6-5.14.1
AC Fan Tray Assembly Replacement Procedure . . . . . 6-5.76.1
AC Fan Tray Sensor Board Replacement Procedure . . . . . 6-5.77.1
ACU3 Card EEPROM Burn Procedure . . . . . 6-5.4.4.1
AGC Clocks 1 and 2 Alignment . . . . . 6-6.24.7.1
AGC Controller Replacement Procedure . . . . . 6-5.16.1
AGC Threshold Voltage Adjustment . . . . . 6-6.24.4.1
Antenna Power Monitor Replacement Procedure . . . . . 6-5.52.22.1
Automatic Wideband Communication Switch Replacement Procedure . . . . . 6-5.81.1
Azimuth Data Package and Azimuth Encoder Replacement Procedure . . . . . 6-5.52.9.1
Azimuth Gearbox Drive Motor Replacement Procedure . . . . . 6-5.52.1 1.1

Subject | Paragraph Figure, Table Number

Equipment and Tools Required – Cont.
Azimuth Gearbox Replacement Procedure . . . . . 6–5.52.10.1
Azimuth Manual Drive Assembly Replacement Procedure . . . . . 6–5.52.7.1
Azimuth Manual Drive Interlock Switch Replacement Procedure . . . . . 6–5.52.8.1
Azimuth Rotary Joint Replacement Procedure . . . . . 6–5.52.16.1
Azimuth Stow Pin Switch Replacement Procedure . . . . . 6–5.52.12.1
Azimuth/Elevation Encoder Alignment . . . . . 6–6.17.1
Azimuth/Elevation Power Amp Replacement Procedure . . . . . 6–5.46.1
Bandpass Filter Replacement Procedure . . . . . 6–5.52.20.1
Bi–directional Crossguide Coupler Replacement Procedure . . . . . 6–5.70.1
Calibration of Internal Noise Source . . . . . 6–6.28.3.3.1
CDS Patch Panel Replacement . . . . . 6–5.61.1
Circulator . . . . . 6–5.52.18.1
Clogged Filter Indicator Alignment . . . . . 6–6.19.1
Coax Cable Replacement Procedure . . . . . 6–5.52.21.1
Coax Delay Line Replacement Procedure . . . . . 6–5.10.1
CSU Replacement Procedure . . . . . 6–5.64.1
CW Substitution Reflectivity Accuracy Verification . . . . . 6–6.28.2.5.1
CW Test Path Calibration . . . . . 6–6.28.3.1.1
DAU Controller Module and Analog Processor Module Replacement Procedure . . . . . 6–5.41.1
Davit Crane and Maintenance Hatch, Lifting with . . . . . 6–5.1.4.1
DCU Analog Card Replacement Procedure . . . . . 6–5.42.1
DCU Azimuth and Elevation D/A Converter/Tach Adjustments . . . . . 6–6.30.1
DCU Digital Card Replacement Procedure . . . . . 6–5.43.1
Dial Modem Replacement Procedure . . . . . 6–5.79.1
Elevation Data Package and Elevation Encoder Replacement Procedure . . . . . 6–5.52.3.1
Elevation Gearbox Drive Motor Replacement Procedure . . . . . 6–5.52.5.1
Elevation Gearbox Replacement Procedure . . . . . 6–5.52.4.1
Elevation Manual Drive Assembly Replacement Procedure . . . . . 6–5.52.1.1
Elevation Manual Drive Stow Pin Switch Replacement Procedure . . . . . 6–5.52.2.1
6–5.52.2.2
Elevation Pre–Limit and Final Limit Switch Adjustment . . . . . 6–6.18.1
Elevation Stow Pin Switch Replacement Procedure . . . . . 6–5.52.6.1
Fixed Attenuator Replacement Procedure . . . . . 6–5.36.1
Four Position RF Switch Replacement Procedure . . . . . 6–5.23.1
Four Way Power Divider Replacement Procedure . . . . . 6–5.21.1
Guard Band Filter Assy Replacement Procedure . . . . . 6–5.18.1
Guard Band IF Amp Assy Replacement Procedure . . . . . 6–5.17.1
HV Bus Monitor Replacement Procedure . . . . . 6–5.47.1
I/Q Phase Detector DC Offset Adjustment . . . . . 6–6.24.3.1
I/Q Phase Detector Gain Adjustment . . . . . 6–6.24.2.1
I/Q Phase Detector Replacement Procedure . . . . . 6–5.13.1

Subject | Paragraph Figure, Table Number

Equipment and Tools Required – Cont.
IF Amp/Limiter Replacement Procedure . . . . . 6–5.12.1
IF Amplifier/Limiter Gain Adjustment
Final . . . . . 6–6.24.6.1
Initial . . . . . 6–6.24.1.1
IF Attenuator Assy Replacement Procedure . . . . . 6–5.11.1
IF Log Amplifier/Detector Replacement Procedure . . . . . 6–5.31.1
Interference Detector Replacement Procedure . . . . . 6–5.20.1
Interference Suppression Unit Alignment . . . . . 6–6.25.1
Klystron Output Path Calibration . . . . . 6–6.28.3.5.1.1
Low Noise Amplifier Replacement Procedure . . . . . 6–5.52.14.1
Main Bearing Oil Sensor Replacement Procedure . . . . . 6–5.52.15.1
Maintenance Panel Assembly Replacement Procedure . . . . . 6–5.50.1
Matched BP Filter Assy Replacement Procedure . . . . . 6–5.9.1
Microwave Delay Line Replacement Procedure . . . . . 6–5.22.1
Minimum Discernible Signal . . . . . 6–6.28.2.2.1
MISC CAL LOSS KLYSTRON OUT TARGET Calibration . . . . . 6–6.28.3.5.3.1
Mixer/Preamp Replacement Procedure . . . . . 6–5.8.1
Multi–Output Log Amp Detector Replacement Procedure . . . . . 6–5.15.1
6–5.19.1
Multi–Position IF Select Switch Replacement Procedure . . . . . 6–5.29.1
Multi–Position RF Select Switch Replacement Procedure . . . . . 6–5.28.1
Passive Diode Limiter Replacement Procedure . . . . . 6–5.52.19.1
Path Loss Measurement . . . . . 6–6.31.1
Pedestal Slip Ring Brush Block Assembly Replacement . . . . . 6–5.69.1
Pedestal/Power Amplifier Unit Replacement Procedure . . . . . 6–5.45.1
Plug–In Frequency Unit Replacement Procedure . . . . . 6–5.38.1
Power Meter Calibration . . . . . 6–6.22.1
Power Monitor Consistency Check . . . . . 6–6.28.1.3.1
Power Monitor Replacement Procedure . . . . . 6–5.27.1
Power Supplies Replacement Procedure . . . . . 6–5.55.1
6–5.56.1
6–5.57.1
6–5.58.1
DCU . . . . . 6–5.44.1
Pre–Select BP Filter Replacement Procedure . . . . . 6–5.7.1
PSP/HSP Card Replacement Procedure . . . . . 6–5.4.3.1
RDA Maintenance Procedures Initial Setup . . . . . 6–6.15.1
RDA Maintenance Terminal Replacement Procedure . . . . . 6–5.68.1
RDA Power Monitor Bias Adjustment . . . . . 6–6.27.1
RDA Restoration . . . . . 6–6.16.1
RDADP Cabinet Power Distribution Panel Replacement Procedure . . . . . 6–5.67.1

Subject | Paragraph Figure, Table Number

Equipment and Tools Required - Cont.
RDADP Power Supplies Adjustment . . . . . 6-6.21.1
RDASC Circuit Card Replacement Procedure . . . . . 6-5.5.4.1
Receiver Adaptation Data Entry and Display . . . . . 6-6.29.1
Receiver Cabinet Blowers Replacement Procedure . . . . . 6-5.37.1
Receiver Interface Replacement Procedure . . . . . 6-5.33.1
Receiver Power Supplies Adjustment . . . . . 6-6.20.1
Receiver Protector Replacement Procedure . . . . . 6-5.52.13.1
Reflectivity Error Check . . . . . 6-6.28.2.1.2
Reflectivity Error Estimate . . . . . 6-6.28.1.4.1
Relay Assembly Replacement Procedure . . . . . 6-5.80.1
Relay Replacement Procedure . . . . . 6-5.49.1
RF Drive Path Calibration . . . . . 6-6.28.3.2.1
RF Frequency Generator Checkout . . . . . 6-6.23.1
RF Frequency Generator Replacement Procedure . . . . . 6-5.6.1
RF Log Amplifier/Detector Replacement Procedure . . . . . 6-5.30.1
RF Noise Source Replacement Procedure . . . . . 6-5.26.1
RF Test Attenuator Calibration . . . . . 6-6.28.3.4.1
RF Test Attenuator Replacement Procedure . . . . . 6-5.24.1
RF/IF Test Monitor Alignment . . . . . 6-6.26.1
RF/IF Test Monitor Replacement Procedure . . . . . 6-5.32.1
RIOS Functionality in RDASOT . . . . . 6-6.33.1
Rotary Joint Replacement Procedure . . . . . 6-5.52.16.1
Sampling Phase Calibration . . . . . 6-6.28.3.5.2.1
SCSI Disk Drive Replacement Procedure . . . . . 6-5.66.5.1
SCSI Enclosure Assembly Replacement Procedure . . . . . 6-5.66.3.1
SCSI Fan Assembly Replacement Procedure . . . . . 6-5.65.1
SCSI Power Supply Replacement Procedure . . . . . 6-5.66.6.1
SCSI Tape Drive Replacement Procedure . . . . . 6-5.66.4.1
Signal Processor Blower Assembly Replacement Procedure . . . . . 6-5.62.1
Slip Ring Replacement Procedure . . . . . 6-5.52.17.1
Solar Calibration . . . . . 6-6.28.3.6.1
Spectrum Filter Replacement Procedure . . . . . 6-5.71.1
Standalone Dial Port Modem Setup Procedure . . . . . 6-6.35.1
STATMUX Replacement Procedure . . . . . 6-5.78.1
STATMUX Setup Procedure . . . . . 6-6.34.1
Suncheck Measurements . . . . . 6-6.28.1.5.1
Swing-Out Power Supply . . . . . 6-5.59.1
Tape Drive Replacement Procedure . . . . . 6-5.66.4.1
Temperature Sense Module Replacement Procedure . . . . . 6-5.60.1
TODY Battery Replacement Procedure . . . . . 6-5.5.5.1
Transient Absorber Replacement Procedure . . . . . 6-5.48.1

Subject — Paragraph Figure, Table Number

Equipment and Tools Required - Cont.
Two Position RF Switch Replacement Procedure . . . . . 6-5.25.1
VME Chassis Power Supply Replacement Procedure . . . . . 6-5.75.1
VME Chassis Replacement Procedure . . . . . 6-5.72.1
VME VCI-V Board Replacement Procedure . . . . . 6-5.74.1
VME Wideband Board Replacement Procedure . . . . . 6-5.73.1
Waveguide Component Replacement . . . . . 6-5.53.4.1
Waveguide Path Loss Measurement . . . . . 6-6.32.1
Waveguide Pressurization Unit Replacement Procedure . . . . . 6-5.54.1
Waveguide Switch Replacement . . . . . 6-5.53.5.1
Equipment Description
RDA . . . . . 1-2.2
RDA Equipment Supplied . . . . . 1-2.1
Equipment Restoration . . . . . 6-6.24.5
Equipment Shelter . . . . . 1-2.2.1
Main Power Distribution Panel . . . . . 5-12.2.3
FAA Redundant . . . . . 5-12.2.5
NWS Redundant . . . . . 5-12.2.8
Secondary Power Distribution Panel . . . . . 5-12.2.4
Secondary Power Distribution Panel #1
FAA Redundant . . . . . 5-12.2.6
NWS Redundant . . . . . 5-12.2.9
Secondary Power Distribution Panel #2
FAA Redundant . . . . . 5-12.2.7
NWS Redundant . . . . . 5-12.2.10
Secondary Power Distribution Panel #3
NWS Redundant . . . . . 5-12.2.11
Thermostats . . . . . Figure 6-65
Waveguide Assembly LRU . . . . . 6-5.53.1
Equipment Supplied . . . . . 1-4.3
Error and Advisory Messages . . . . . 4-4.6
Error Detection Circuitry . . . . . 5-6.6.5.5
Error Message Paging . . . . . 4-7.2.4
Error Messages
Basic Confidence Test . . . . . Table 6-10
Command Input . . . . . 4-4.3.2
Global (30) . . . . . Table 6-9
M3200 (11) . . . . . Table 6-11
OS/32 Operator Command . . . . . Table 4-31
Power Subsystem (08) . . . . . Table 6-8

Subject — Paragraph Figure, Table Number

Error Responses
OS/32 Command Format . . . . . Table 4-30
ESD Dip Switch Setting . . . . . 6-5.2.6.2
Expanded Timing Diagram . . . . . Figure 5-14
External Branch Select Multiplexer . . . . . 5-6.7.5.6

## F

FAA Redundant RDA Shelter Assembly
ICD . . . . . Figure FO7-6
FAA Redundant Systems
Switching Between Redundant Channels
Locally
MSCF . . . . . Table 4-48
Remotely
MSCF . . . . . Table 4-46
With MSCF Installed . . . . . 4-5.4.1 1.2
Fast Restart . . . . . 5-1 1.9.6
5-14.2.19.2
Control Sequence . . . . . 5-14.2.19.6
Fastchek Procedure . . . . . 4-3.2.2
Table 4-26
Fault Detection . . . . . 5-12.3.2.1.1.7
Fault Isolation Flowcharts . . . . . 6-3.2
Cabling and Connector Problems . . . . . 6-3.2.9
Flowchart Comments . . . . . 6-3.2.5
Flowchart Notesheets . . . . . 6-3.2.6
Flowchart Symbol Convention . . . . . 6-3.2.8
Operability Test . . . . . 6-3.2.3
Primary . . . . . 6-3.6
Quick Reference Chart . . . . . 6-3.2.4
RDA . . . . . 6-3.2.2
Secondary Fault Isolation . . . . . 6-3.2.7
System . . . . . 6-3.2.1

Subject | Paragraph Figure, Table Number

Fault Monitoring
- Hardware . . . . . 5-3.9.1
- Software . . . . . 5-3.9.2
- Transmitter . . . . . 5-3.9

Feed Support Structure . . . . . 1-2.2.2.3

Feed Through Enable (FT) . . . . . 5-6.6.5.7.3

Feedback Line . . . . . 4-5.2.5

Fifth Order Filter Algorithm . . . . . Figure 5-8

Filament Power Supply PS1 . . . . . 5-3.3.4

Filament Transformer A7T3 . . . . . 5-3.3.7

File Loading Failure . . . . . 5-14.2.17.1

Filter Output Combiner . . . . . 5-5.3.2.4

Final Data Record . . . . . Table 6-30

First Configuration Service Submenu . . . . . Figure 6-86

Fixed Attenuator Replacement Procedure . . . . . 6-5.36
- Equipment and Tools Required . . . . . 6-5.36.1
- Initial Conditions/Preliminary Setup . . . . . 6-5.36.2
- Replacement Procedure . . . . . 6-5.36.3

Fixed Disk Drive . . . . . 5-7.7.4

Floating-Point Accumulator . . . . . 5-6.6.5.7

Flowchart
- Antenna/Pedestal Secondary . . . . . Figure 6-6
- Comments . . . . . 6-3.2.5
- HSP Secondary Fault Isolation . . . . . Figure 6-9
- Note Index . . . . . Table 6-2
- Notes . . . . . 6-3.3
- Notesheets . . . . . 6-3.2.6
- Primary Fault Isolation . . . . . 6-3.6
- PSP Secondary Fault Isolation . . . . . Figure 6-10
- RDA Fault Isolation . . . . . 6-3.2.2
  Figure 6-2
- Symbol Convention . . . . . 6-3.2.8
- System Fault Isolation . . . . . 6-3.2.1
  Figure 6-1
- Transmitter Secondary Fault Isolation . . . . . Figure 6-5

Focus Coil Power Supply PS2 . . . . . 5-3.3.9

Subject | Paragraph Figure, Table Number

Forced Termination . . . . . 4-7.2.3.2

Form RDA Data . . . . . 1-3.3.3
Creates Parameters List . . . . . 1-3.3.3.1
Designates Destination . . . . . 1-3.3.3.2
Stores Base and Status Data . . . . . 1-3.3.3.3

Four Position RF Switch Replacement Procedure . . . . . 6-5.23
Equipment and Tools Required . . . . . 6-5.23.1
Initial Conditions/Preliminary Setup . . . . . 6-5.23.2
Replacement Procedure . . . . . 6-5.23.3

Four Way Power Divider Replacement Procedure . . . . . 6-5.21
Equipment and Tools Required . . . . . 6-5.21.1
Initial Conditions/Preliminary Setup . . . . . 6-5.21.2
Replacement Procedure . . . . . 6-5.21.3

Frequency Generator . . . . . 5-4.4.2
IF COHO . . . . . 5-4.4.2.2
Master Clock . . . . . 5-4.4.2.1
RF Drive . . . . . 5-4.4.2.3
RF Test . . . . . 5-4.4.2.5
STALO . . . . . 5-4.4.2.4

Full Restart . . . . . 5-14.2.19.1

Function 1 - Handle Maintenance Console CPCI 01 . . . . . 5-2.9.3.1

Function 1 - SOT Control CPCI 06 . . . . . 5-2.9.4.1

Function 2 - Monitor RDA Hardware CPCI 01 . . . . . 5-2.9.3.2

Function 2 - Transmitter Diagnostics CPCI 06 . . . . . 5-2.9.4.2

Function 3 - Form RDA Data CPCI 01 . . . . . 5-2.9.3.3

Function 3 - Tower/Utility Diagnostics CPCI 06 . . . . . 5-2.9.4.3

Function 4 - Data Acquisition Unit (Interface) Diagnostics CPCI 06 . . . . . 5-2.9.4.4

Function 4 - Handle Wideband Data CPCI 01 . . . . . 5-2.9.3.4

Function 5 - Control RDA CPCI 01 . . . . . 5-2.9.3.5

Function 5 - Pedestal Diagnostics CPCI 06 . . . . . 5-2.9.4.5

Function 6 - Control Signal Processor CPCI 01 . . . . . 5-2.9.3.6

Function 6 - Receiver Diagnostics CPCI 06 . . . . . 5-2.9.4.6

Function 7 - Control Pedestal CPCI 01 . . . . . 5-2.9.3.7

Function 7 - PSP Diagnostics CPCI 06 . . . . . 5-2.9.4.7

Function 8 - HSP Diagnostics CPCI 06 . . . . . 5-2.9.4.8

Subject | Paragraph Figure, Table Number

Function 9 - Complex Spectrum Measurement (Confidence Test) CPCI 06 . . . . . 5-2.9.4.9
Function 10 - Clutter Bypass Map Generation CPCI 06 . . . . . 5-2.9.4.10
Function 11 - Sun Source Checks CPCI 06 . . . . . 5-2.9.4.11
Functional Description
Antenna Positioning Electronics . . . . . 5-11.3
Ground Clutter Suppression . . . . . 5-5.4.4.6
Redundant RDASC/DAU Command Data Interface . . . . . Figure FO5-15
Synchronizer . . . . . 5-5.4.6.4
Functional Flow Diagram
Analog Status Data Monitoring . . . . . Figure FO5-20
Redundant . . . . . Figure FO5-21
Antenna Position Data Interface . . . . . Figure FO5-28
DAU/RDASC Status Data Interface . . . . . Figure FO5-16
Discrete Status Data Monitoring
Kohler . . . . . Figure FO5-18
Onan . . . . . Figure FO5-17
Redundant . . . . . Figure FO5-19
Interference Detection . . . . . Figure FO5-7
Master Signal Generation . . . . . Figure FO5-6
Microwave Distribution . . . . . Figure FO5-22
Redundant . . . . . Figure FO5-23
RDA Servo Interface . . . . . Figure FO5-26
RDASC/DAU Command Data Interface . . . . . Figure FO5-14
Receiver Channel . . . . . Figure FO5-5
RF Test Signal Generation . . . . . Figure FO5-8
RF Test Signal Processing . . . . . Figure FO5-9
Servo Fault Monitoring . . . . . Figure FO5-29
Servo Loop Electronics . . . . . Figure FO5-27
Servo Microprocessor Control Circuitry . . . . . Figure FO5-25
Functional Group
Antenna/Pedestal . . . . . 6-4.3
HSP . . . . . 6-4.5
Maintenance Panel/DAU . . . . . 6-4.8
PSP . . . . . 6-4.6
RDASC . . . . . 6-4.7
Receiver . . . . . 6-4.4
Transmitter . . . . . 6-4.2
Functional Representation of RDASC Processor . . . . . Figure 5-28
Fuse Box Assembly . . . . . 5-3.7.2

Subject | Paragraph Figure, Table Number

## G


Generate Clutter Map . . . . . 4-7.4.2

Generation of Interrupts . . . . . 5-6.8.3

Generator Shelter
- Layout . . . . . Figure 1-11
- Power Distribution Panel . . . . . 5-12.2.2

Global Parameters Form Menu . . . . . Figure 6-88

Glossary of Terms . . . . . 1-4.2

Ground Clutter Reflectivity . . . . . 5-5.3.2.7

Ground Clutter Suppression . . . . . 5-5.3.2 5-5.4.4
- Batch Mode . . . . . 5-5.3.2.9
- Clutter Filter . . . . . 5-5.3.2.2
- Clutter Filter Bypass Map . . . . . 5-5.4.4.3
- Clutter Filter Control . . . . . 5-5.4.4.2
- Clutter Filter Notch Width Control Map . . . . . 5-5.4.4.4
- Clutter Filter-PSP Interface . . . . . 5-5.4.4.5
- Clutter Filtering . . . . . 5-5.4.4.1
- Clutter Map . . . . . 5-5.4.4.7
- Clutter Map Circuit . . . . . 5-5.3.2.8
- Clutter Maps . . . . . 5-5.3.2.5
- Filter Output Combiner . . . . . 5-5.3.2.4
- Function . . . . . 5-5.3.2.1
- Functional Description . . . . . 5-5.4.4.6
- Ground Clutter Reflectivity . . . . . 5-5.3.2.7
- Passband Edge Velocity . . . . . 5-5.3.2.6
- RDASC Processor . . . . . 5-5.3.2.3

Guard Band Filter Assy Replacement Procedure . . . . . 6-5.18
- Equipment and Tools Required . . . . . 6-5.18.1
- Initial Conditions/Preliminary Setup . . . . . 6-5.18.2
- Replacement Procedure . . . . . 6-5.18.3

Guard Band Filters . . . . . 5-4.5.2

Guard Band Gain Match . . . . . 6-6.11.1

Guard Band IF Amp Assy Replacement Procedure . . . . . 6-5.17
- Equipment and Tools Required . . . . . 6-5.17.1
- Initial Conditions/Preliminary Setup . . . . . 6-5.17.2
- Replacement Procedure . . . . . 6-5.17.3

Subject — Paragraph Figure, Table Number

Guard Band IF Amplifier . . . . . 5-4.5.1
Figure 6-80
Alignment . . . . . 6-6.25.3

## H

Half-Board Disassembly and Assembly . . . . . 6-5.5.3
Half-Board Disassembly/Assembly Procedure . . . . . Table 6-19
Handle Maintenance Console . . . . . 1-3.3.1
Handle RDA Interprocessor Link . . . . . 1-3.3.8
Handle Wideband Data . . . . . 1-3.3.4
Handle Wideband Functions . . . . . 1-3.3.4.2
Handle Wideband Link Steps . . . . . 1-3.3.4.1
RDA Cold Startup . . . . . 1-3.3.4.1.1
RDA Restart . . . . . 1-3.3.4.1.2
RDA Shutdown . . . . . 1-3.3.4.1.3
Handle Wideband Functions . . . . . 1-3.3.4.2
Handle Wideband Link Steps . . . . . 1-3.3.4.1
Handling of Electrostatic Sensitive Devices . . . . . 6-5.2.6
Card Removal/Installation . . . . . 6-5.2.6.1
ESD Dip Switch Setting . . . . . 6-5.2.6.2
Hardware Fault Monitoring . . . . . 5-3.9.1
Hardwired Signal Processor Functional Group . . . . . 6-4.5
Hardwired Signal Processor Tasks . . . . . Table 1-9
Harmonic Filter . . . . . 5-3.6.1
HDLC Frame Structure . . . . . Figure 5-25
High Power Microwave Distribution . . . . . 5-2.2.5
HP436A Power Meter Calibration . . . . . 6-6.8
HSP . . . . . 5-2.7
Diagnostic . . . . . 1-3.5.1.7
4-7.3.7
5-6.8.5
Ground Clutter Suppression . . . . . 5-2.7.2
HSP4 Procedure . . . . . 6-4.5.2
Interference Flag Processing . . . . . 5-2.7.4
Logic Probe Setup . . . . . 6-4.5.4
LRU vs. Functionality Matrix . . . . . Table 5-8

Subject — Paragraph Figure, Table Number

HSP - Cont.
Operations
Control Interface . . . . . 5-5.2.3.2
Synchronizer . . . . . 5-5.2.3.1
Overview . . . . . 5-5.3
Ground Clutter Suppression . . . . . 5-5.3.2
Prescaling . . . . . 5-5.3.1
Synchronization . . . . . 5-5.3.3
Raw Data . . . . . 5-5.2.3
Receiver and HSP Test Data Generation . . . . . 5-2.7.7
Receiver and Transmitter Synchronization . . . . . 5-2.7.3
Receiver Control Data Generation . . . . . 5-2.7.6
Receiver Status Data Collection . . . . . 5-2.7.8
Secondary Fault Isolation Flowchart . . . . . Figure 6-9
Status Data Collection . . . . . 5-2.7.8
5-5.4.10
Subtest Setup . . . . . 6-4.5.3
Tasks . . . . . Table 1-9
Test Data Generation . . . . . 5-2.7.7
Timing and Control . . . . . 5-2.7.5
Video Prescaling . . . . . 5-2.7.1
Functional Block Diagram . . . . . Figure FO5-10
Wiring and Backplane Continuity Check . . . . . 6-4.5.5

HSP and Receiver Status Data Collection . . . . . 5-2.7.8
5-5.4.10

HSP Functional Block Diagram Description
HSP Overview . . . . . 5-5.3
HSP Processing . . . . . 5-5.4
HSP/PSP Relationships . . . . . 5-5.2
On-Line Performance Checks . . . . . 5-5.5

HSP Functional Group . . . . . 6-4.5
HSP1 Through HSP3 and HSP5 Through HSP8 General Procedure . . . . . 6-4.5.1

HSP Processing . . . . . 5-5.4
CI . . . . . 5-5.4.2
Destination Files . . . . . 5-5.4.1
Ground Clutter Suppression . . . . . 5-5.4.4
HSP and Receiver Status Data Collection . . . . . 5-5.4.10
Interference Tag Processing . . . . . 5-5.4.9
Receiver and HSP Test Data Generation . . . . . 5-5.4.7
Receiver Control Data Generation . . . . . 5-5.4.8
Receiver, Transmitter and HSP Synchronization . . . . . 5-5.4.6

Subject — Paragraph Figure, Table Number

HSP Processing - Cont.
Timing and Control . . . . . 5-5.4.5
Video Prescaling . . . . . 5-5.4.3
HSP Timing and Control . . . . . 5-5.4.5
Capture Filter Codes . . . . . 5-5.4.5.5
CIB Write Strobe Generation . . . . . 5-5.4.5.2
Clock Distribution . . . . . 5-5.4.5.6
Command Generation . . . . . 5-5.4.5.4
Destination 7 Registers . . . . . 5-5.4.5.3
Write Strobe Generation . . . . . 5-5.4.5.1
HSP/PSP Relationships . . . . . 5-5.2
Raw Data . . . . . 5-5.2.3
Time Series Data . . . . . 5-5.2.2
Video Signal Prescaling Processing . . . . . 5-5.2.1
HSP1 Through HSP3 and HSP5 Through HSP8 General Procedure . . . . . 6-4.5.1
HSP4 Procedure . . . . . 6-4.5.2
HV Bus Monitor Replacement Procedure . . . . . 6-5.47
Equipment and Tools Required . . . . . 6-5.47.1
Initial Conditions/Preliminary Setup . . . . . 6-5.47.2
Replacement Procedure . . . . . 6-5.47.3

## I

I & Q Phase Detector . . . . . Figure 6-77
I or Q Significant Signal . . . . . 5-5.4.3.2
I, Q, and Log Test Video . . . . . 5-5.4.7.5
I/Q Phase Detector . . . . . 5-4.3.9.2
5-4.9.6.1
DC Offset Adjustment . . . . . 6-6.24.3
Gain Adjustment . . . . . 6-6.24.2
Gain and DC Offset Adjustment . . . . . 6-6.10.2
Output . . . . . Figure 5-4
Replacement Procedure . . . . . 6-5.13
Equipment and Tools Required . . . . . 6-5.13.1
Initial Conditions/Preliminary Setup . . . . . 6-5.13.2
Procedure . . . . . 6-5.13.3
ICD
Antenna/Pedestal Group . . . . . Figure FO7-8
FAA Redundant RDA Shelter Assembly . . . . . Figure FO7-6

Subject — Paragraph Figure, Table Number

ICD - Cont.
NEXRAD System Interface Diagram . . . . . Figure FO7-1
Figure FO7-2
NWS Redundant RDA Shelter Assembly . . . . . Figure FO7-7
Radar Receiver . . . . . Figure FO7-9
RDA . . . . . Figure FO7-3
Redundant . . . . . Figure FO7-4
RDA Shelter Assembly . . . . . Figure FO7-5
RDADP . . . . . Figure FO7-10
Redundant RDADP
FAA . . . . . Figure FO7-12
NWS . . . . . Figure FO7-11
ICRA . . . . . 4-5.4.10
Table 4-44
IF Amp/Limiter Replacement Procedure . . . . . 6-5.12
Equipment and Tools Required . . . . . 6-5.12.1
Initial Conditions/Preliminary Setup . . . . . 6-5.12.2
Replacement Procedure . . . . . 6-5.12.3
IF Amplifier/Limiter . . . . . 5-4.3.9.1
Figure 6-76
Gain Adjustment
Final . . . . . 6-6.24.6
Initial . . . . . 6-6.24.1
Noise Reference Level Adjustment . . . . . 6-6.10.1
IF Attenuation Increments . . . . . Table 5-2
IF Attenuator . . . . . 5-4.3.8.3
IF Attenuator Assy Replacement Procedure . . . . . 6-5.11
Equipment and Tools Required . . . . . 6-5.11.1
Initial Conditions/Preliminary Setup . . . . . 6-5.11.2
Replacement Procedure . . . . . 6-5.11.3
IF Attenuator Calibration and I&Q Amplitude and Phase Balance . . . . . 5-4.9.6
I/Q Phase Detector . . . . . 5-4.9.6.1
IF COHO, Frequency Generator . . . . . 5-4.4.2.2
IF Log Amplifier Detector Replacement Procedure
Equipment and Tools Required . . . . . 6-5.31.1
Initial Conditions/Preliminary Setup . . . . . 6-5.31.2
Replacement Procedure . . . . . 6-5.31.3
IF Log Amplifier-Detector . . . . . 5-4.8.2.2
IF Log Amplifier/Detector Replacement Procedure . . . . . 6-5.31

Subject | Paragraph Figure, Table Number

IF Signal . . . . . 5-4.3.7.1
Incoming Messages Area . . . . . 4-5.2.6
Initial Conditions/Preliminary Setup
6 dB Attenuator Pad Replacement Procedure . . . . . 6-5.34.2
10 dB Attenuator Pad Replacement Procedure . . . . . 6-5.35.2
20 dB Directional Coupler Replacement Procedure . . . . . 6-5.40.2
40 dB Directional Coupler Replacement Procedure . . . . . 6-5.39.2
A/B Switch Replacement Procedure . . . . . 6-5.63.2
A/D Converter Replacement Procedure . . . . . 6-5.14.2
AC Fan Tray Assembly Replacement Procedure . . . . . 6-5.76.2
AC Fan Tray Sensor Board Replacement Procedure . . . . . 6-5.77.2
ACU3 Card EEPROM Burn Procedure . . . . . 6-5.4.4.2
AGC Clocks 1 and 2 Alignment . . . . . 6-6.24.7.2
AGC Controller Replacement Procedure . . . . . 6-5.16.2
AGC Threshold Voltage Adjustment . . . . . 6-6.24.4.2
Antenna Power Monitor Replacement Procedure . . . . . 6-5.52.22.2
Automatic Wideband Communication Switch Replacement Procedure . . . . . 6-5.81.2
Azimuth Data Package Replacement Procedure . . . . . 6-5.52.9.2
Azimuth Gearbox Drive Motor Replacement Procedure . . . . . 6-5.52.1 1.2
Azimuth Gearbox Replacement Procedure . . . . . 6-5.52.10.2
Azimuth Manual Drive Assembly Replacement Procedure . . . . . 6-5.52.7.2
Azimuth Manual Drive Interlock Switch Replacement Procedure . . . . . 6-5.52.8.2
Azimuth Rotary Joint Replacement Procedure . . . . . 6-5.52.16.2
Azimuth Stow Pin Switch Replacement Procedure . . . . . 6-5.52.12.2
Azimuth/Elevation Encoder Alignment . . . . . 6-6.17.2
Azimuth/Elevation Power Amp Replacement Procedure . . . . . 6-5.46.2
Bandpass Filter Replacement Procedure . . . . . 6-5.52.20.2
Bi-directional Crossguide Coupler Replacement Procedure . . . . . 6-5.70.2
CDS Patch Panel Replacement Procedure . . . . . 6-5.61.2
Circulator Replacement Procedure . . . . . 6-5.52.18.2
Clogged Filter Indicator Alignment . . . . . 6-6.19.2
Coax Cable Replacement Procedure . . . . . 6-5.52.21.2
Coax Delay Line Replacement Procedure . . . . . 6-5.10.2
CSU Replacement Procedure . . . . . 6-5.64.2
DAU Controller Module and Analog Processor Module Replacement Procedure . . . . . 6-5.41.2
Davit Crane and Maintenance Hatch, Lifting with . . . . . 6-5.1.4.2
DCU Analog Card Replacement Procedure . . . . . 6-5.42.2
DCU Azimuth and Elevation D/A Converter/Tach Adjustments . . . . . 6-6.30.2
DCU Digital Card Replacement Procedure . . . . . 6-5.43.2
Dial Modem Replacement Procedure . . . . . 6-5.79.2
Elevation Data Package and Elevation Encoder Replacement Procedure . . . . . 6-5.52.3.2

Subject | Paragraph Figure, Table Number

Initial Conditions/Preliminary Setup - Cont.
Elevation Gearbox Drive Motor Replacement Procedure . . . . . 6-5.52.5.2
Elevation Gearbox Replacement Procedure . . . . . 6-5.52.4.2
Elevation Manual Drive Assembly Replacement Procedure . . . . . 6-5.52.1.2
Elevation Pre-Limit and Final Limit Switch Adjustment . . . . . 6-6.18.2
Elevation Stow Pin Switch Replacement Procedure . . . . . 6-5.52.6.2
Fixed Attenuator Replacement Procedure . . . . . 6-5.36.2
Four Position RF Switch Replacement Procedure . . . . . 6-5.23.2
Four Way Power Divider Replacement Procedure . . . . . 6-5.21.2
Guard Band Filter Assy Replacement Procedure . . . . . 6-5.18.2
Guard Band IF Amp Assy Replacement Procedure . . . . . 6-5.17.2
HV Bus Monitor Replacement Procedure . . . . . 6-5.47.2
I/Q Phase Detector DC Offset Adjustment . . . . . 6-6.24.3.2
I/Q Phase Detector Gain Adjustment . . . . . 6-6.24.2.2
I/Q Phase Detector Replacement Procedure . . . . . 6-5.13.2
IF Amp/Limiter Replacement Procedure . . . . . 6-5.12.2
IF Amplifier/Limiter Gain Adjustment
Final . . . . . 6-6.24.6.2
Initial . . . . . 6-6.24.1.2
IF Attenuator Assy Replacement Procedure . . . . . 6-5.1 1.2
IF Log Amplifier/Detector Replacement Procedure . . . . . 6-5.31.2
Interference Detector Replacement Procedure . . . . . 6-5.20.2
Interference Suppression Unit Alignment . . . . . 6-6.25.2
Low Noise Amplifier Replacement Procedure . . . . . 6-5.52.14.2
Main Bearing Oil Sensor Replacement Procedure . . . . . 6-5.52.15.2
Maintenance Panel Assembly Replacement Procedure . . . . . 6-5.50.2
Matched BP Filter Assy Replacement Procedure . . . . . 6-5.9.2
Microwave Delay Line Replacement Procedure . . . . . 6-5.22.2
Mixer/Preamp Replacement Procedure . . . . . 6-5.8.2
Multi-Output Log Amp Detector Replacement Procedure . . . . . 6-5.15.2
6-5.19.2
Multi-Position IF Select Switch Replacement Procedure . . . . . 6-5.29.2
Multi-Position RF Select Switch Replacement Procedure . . . . . 6-5.28.2
Passive Diode Limiter Replacement Procedure . . . . . 6-5.52.19.2
Pedestal Slip Ring Brush Block Assembly Replacement . . . . . 6-5.69.2
Pedestal/Power Amplifier Unit Replacement Procedure . . . . . 6-5.45.2
Plug-In Frequency Unit Replacement Procedure . . . . . 6-5.38.2
Power Meter Calibration . . . . . 6-6.22.2
Power Monitor Replacement Procedure . . . . . 6-5.27.2

Subject | Paragraph Figure, Table Number

Initial Conditions/Preliminary Setup - Cont.
Power Supplies Replacement Procedure . . . . . 6-5.55.2
6-5.56.2
6-5.57.2
6-5.58.2
DCU . . . . . 6-5.44.2
Pre-Select BP Filter Replacement Procedure . . . . . 6-5.7.2
PSP/HSP Card Replacement Procedure . . . . . 6-5.4.3.2
RDA Maintenance Procedures Initial Setup . . . . . 6-6.15.2
RDA Maintenance Terminal Replacement Procedure . . . . . 6-5.68.2
RDA Power Monitor Bias Adjustment . . . . . 6-6.27.2
RDA Restoration . . . . . 6-6.16.2
RDADP Cabinet Power Distribution Panel Replacement Procedure . . . . . 6-5.67.2
RDADP Power Supplies Adjustment . . . . . 6-6.21.2
RDASC Circuit Card Replacement Procedure . . . . . 6-5.5.4.2
Receiver Adaptation Data Entry and Display . . . . . 6-6.29.2
Receiver Cabinet Blowers Replacement Procedure . . . . . 6-5.37.2
Receiver Interface Replacement Procedure . . . . . 6-5.33.2
Receiver Power Supplies Adjustment . . . . . 6-6.20.2
Receiver Protector Replacement Procedure . . . . . 6-5.52.13.2
Reflectivity Error Check . . . . . 6-6.28.2.1.3
Relay Assembly Replacement Procedure . . . . . 6-5.80.2
Relay Replacement Procedure . . . . . 6-5.49.2
RF Frequency Generator Checkout . . . . . 6-6.23.2
RF Frequency Generator Replacement Procedure . . . . . 6-5.6.2
RF Log Amplifier/Detector Replacement Procedure . . . . . 6-5.30.2
RF Noise Source Replacement Procedure . . . . . 6-5.26.2
RF Test Attenuator Replacement Procedure . . . . . 6-5.24.2
RF/IF Test Monitor Alignment . . . . . 6-6.26.2
RF/IF Test Monitor Replacement Procedure . . . . . 6-5.32.2
Rotary Joint Replacement Procedure . . . . . 6-5.52.16.2
SCSI Disk Drive Replacement Procedure . . . . . 6-5.66.5.2
SCSI Enclosure Assembly Replacement Procedure . . . . . 6-5.66.3.2
SCSI Fan Assembly Replacement Procedure . . . . . 6-5.65.2
SCSI Power Supply Replacement Procedure . . . . . 6-5.66.6.2
SCSI Tape Drive Replacement Procedure . . . . . 6-5.66.4.2
Signal Processor Blower Assembly Replacement Procedure . . . . . 6-5.62.2
Slip Ring Replacement Procedure . . . . . 6-5.52.17.2
Spectrum Filter . . . . . 6-5.71.2
Standalone Dial Port Modem, Setup Procedure . . . . . 6-6.35.2
STATMUX Replacement Procedure . . . . . 6-5.78.2
STATMUX Setup Procedure . . . . . 6-6.34.2

Subject — Paragraph Figure, Table Number

Initial Conditions/Preliminary Setup - Cont.
Suncheck Measurements . . . . . 6-6.28.1.5.2
Swing-Out Power Supply . . . . . 6-5.59.2
Temperature Sense Module Replacement Procedure . . . . . 6-5.60.2
TODY Battery Replacement Procedure . . . . . 6-5.5.5.2
Transient Absorber Replacement Procedure . . . . . 6-5.48.2
Two Position RF Switch Replacement Procedure . . . . . 6-5.25.2
VME Chassis Power Supply Replacement Procedure . . . . . 6-5.75.2
VME Chassis Replacement Procedure . . . . . 6-5.72.2
VME VCI-V Board Replacement Procedure . . . . . 6-5.74.2
VME Wideband Board Replacement Procedure . . . . . 6-5.73.2
Waveguide Component Replacement . . . . . 6-5.53.4.2
Waveguide Path Loss Measurement . . . . . 6-6.32.2
Waveguide Pressurization Unit Replacement Procedure . . . . . 6-5.54.2
Waveguide Switch Replacement . . . . . 6-5.53.5.2

Initialization
CPCI 02 . . . . . 1-3.4.5.2
M3200 Processor Diagnostics . . . . . 4-6.4.1
RDASOT Procedures . . . . . 4-7.6.1

Inoperative Alarms . . . . . 6-3.4.2.1

Input Registers . . . . . 5-6.6.5.3

Input Signal Selection and Distribution . . . . . 5-6.5
Function . . . . . 5-6.3.1
ISC Control and Parameter Storage . . . . . 5-6.5.1
ISC Data Storage and Distribution . . . . . 5-6.5.3
ISC Interrupt Generation . . . . . 5-6.5.4
ISC Memory Address Generation . . . . . 5-6.5.2

Input Test Signal Switching . . . . . 5-4.7.4
4-Position RF Switch . . . . . 5-4.7.4.5
Delayed Klystron Output Test Sample . . . . . 5-4.7.4.3
Frequency Generator RF Test Signal . . . . . 5-4.7.4.1
Klystron RF Drive Sample . . . . . 5-4.7.4.4
Select Control Signal . . . . . 5-4.7.4.6
Wideband Noise Test Signal . . . . . 5-4.7.4.2

Input/Output . . . . . 5-7.4.6

Input/Output Chassis Backplane Wiring . . . . . 6-5.5.2.1

| Subject | Paragraph Figure, Table Number |
|---|---|
| Input/Output Chassis Terminators | 6-5.5.2.3 |
| 35-813M01 Terminators | 6-5.5.2.3.1 |
| | Figure 6-21 |
| 35-814 Terminators | Figure 6-22 |
| 35-814M01 Terminators | 6-5.5.2.3.2 |
| 35-ADL | 6-5.5.2.3.3 |
| S-BUS Terminator Board (35-886) | 6-5.5.2.3.4 |
| | Figure 6-23 |
| Terminator Board Locations | Figure 6-20 |
| Terminator Locations | Table 6-18 |
| Input/Output Controller | 5-6.8 |
| Continuous Updating | 5-6.8.4 |
| Destination Write Data Selection and Distribution | 5-6.8.7 |
| Function | 5-6.3.4 |
| Generation of Interrupts | 5-6.8.3 |
| Output and Status Memory | 5-6.8.11 |
| Output Memory Write Data Selection | 5-6.8.10 |
| PSP and HSP Diagnostics | 5-6.8.5 |
| PSP Output and Status Memory Control | 5-6.8.9 |
| RDASC Lead | 5-6.8.6 |
| Read Data Selection Control | 5-6.8.8 |
| Read Function | 5-6.8.2 |
| Write Function | 5-6.8.1 |
| Inspect/Change Adaptation Data | 4-5.4.10 |
| | Table 4-44 |
| Inspection | 6-5.2.4 |
| Installation Procedure EEPROM Microcode | Table 6-17 |
| Interface with RDASC Processor | 5-2.8.4.1 |
| Interference Detection | 5-2.4.4 |
| | 5-4.2.3 |
| | 5-4.5 |
| Detection Processor | 5-4.5.4 |
| Functional Flow Diagram | Figure FO5-7 |
| Guard Band Filters | 5-4.5.2 |
| Guard Band IF Amplifier | 5-4.5.1 |
| Log Amplifier-Detectors | 5-4.5.3 |
| Interference Detector Replacement Procedure | 6-5.20 |
| Equipment and Tools Required | 6-5.20.1 |
| Initial Conditions/Preliminary Setup | 6-5.20.2 |
| Replacement Procedure | 6-5.20.3 |

| Subject | Paragraph Figure, Table Number |
|---|---|
| Interference Detector Threshold Adjustment | 6-6.1 1.2 |
| Interference Flag Processing | 5-2.7.4 |
| Interference Suppression Unit Alignment | 6-6.25 |
| Equipment and Tools Required | 6-6.25.1 |
| Guard Band IF Amplifier Alignment | 6-6.25.3 |
| Initial Conditions/Preliminary Setup | 6-6.25.2 |
| Set Interference Detector Thresholds | 6-6.25.4 |
| Interference Suppression Unit Alignment Description | 6-6.1 1 |
| Guard Band Gain Match | 6-6.1 1.1 |
| Interference Detector Threshold Adjustment | 6-6.1 1.2 |
| Interference Tag Processing | 5-5.4.9 |
| Interior AC Configuration | Figure 6-66 |
| Interlocks | 4-2.5 |
| Internal Interfaces | 1-2.2.5.4 |
| Interprocessor Status Data | 5-14.2.22.4 |
| Interrupt Assignments | Table 5-13 |
| Interrupt Priority Backpanel Wiring | 6-5.5.2.2 |
| Interrupt Sync Register | 5-6.7.5.3 |
| Interrupt Vector Latch | 5-6.7.5.5 |
| IOC | 5-6.8 |
| Diagnostic | 5-6.9.8 |
| IOC in Diagnostic Mode | 5-6.9.8.2 |
| Microinstruction Multiplexer | 5-6.9.8.4 |
| Multiplexer | 5-6.9.8.3 |
| SDI Control Logic | 5-6.9.8.1 |
| Function | 5-6.3.4 |
| Control Commands and Write Data | 5-6.3.4.1 |
| IPC Diagnostic (06-297) | 4-6.3.5 |
| ISC | |
| Control and Parameter Storage | 5-6.5.1 |
| AU Wrap-Around Signal | 5-6.5.1.2 |
| ISC Parameter Storage | 5-6.5.1.4 |
| Range Cell Counter | 5-6.5.1.3 |
| SIP Signal | 5-6.5.1.1 |
| Data Storage and Distribution | 5-6.5.3 |
| Diagnostic Function | 5-6.9.2.4 |
| Diagnostics Interface | 5-6.9.2<br>5-6.9.2.1 |
| Diagnostic Force Data | 5-6.9.2.2 |

Subject — Paragraph Figure, Table Number

ISC - Cont.
Diagnostics Interface - Cont.
Function . . . . . 5-6.9.2.4
Simulated Timing and Control Signals . . . . . 5-6.9.2.3
Interrupt Generation . . . . . 5-6.5.4
Memory Address Generation . . . . . 5-6.5.2
Parameter Storage . . . . . 5-6.5.1.4

Isolation Flowcharts, Fault . . . . . 6-3.2

ISSD Function . . . . . 5-6.3.1
AU Memory Addresses . . . . . 5-6.3.1.3
PSP/RDASC Data Transfer and Control Function . . . . . 5-6.3.1.2
Real and Imaginary Clutter Filter . . . . . 5-6.3.1.1

Issuing Commands from the Command Line . . . . . 4-5.3.2

Issuing Commands from the Menus . . . . . 4-5.3.3

ISU Performance Degraded . . . . . 5-4.9.7.4

## K

Key 0 Commands . . . . . 4-4.4.2 Table 4-34

Key 1 Commands . . . . . 4-4.4.3 Table 4-35

Key 2 Commands . . . . . 4-4.4.4 Table 4-36

Keyboard Layout . . . . . 4-1.4.2

Klystron Output Path Calibration . . . . . 6-6.28.3.5.1
Equipment and Tools Required . . . . . 6-6.28.3.5.1.1
Procedure . . . . . 6-6.28.3.5.1.2

Klystron Pulse Sample Scaling and Delay . . . . . 5-4.7.2

Klystron RF Drive Sample . . . . . 5-4.7.4.4

Klystron Tube . . . . . 5-3.3.10

## L

Leading Particulars . . . . . 1-1.3

LED Status, CDS Master Module . . . . . Table 4-6

Level II Configuration Menu . . . . . Figure 6-87

Subject | Paragraph Figure, Table Number

Linear and Log Channel Reflectivity Calibration . . . . . 5-4.9.1
Alarm Parameters . . . . . 5-4.9.1.5
RF Drive . . . . . 5-4.9.1.1
RF Drive and CW Test Signal . . . . . 5-4.9.1.3
RF Drive Average . . . . . 5-4.9.1.2
SYSCAL . . . . . 5-4.9.1.4
Linear Channel Video Detection . . . . . 5-4.2.1.8 5-4.3.9
I/Q Phase Detector . . . . . 5-4.3.9.2
IF Amplifier-Limiter . . . . . 5-4.3.9.1
Linear Polarization Equipment . . . . . Figure 6-42
Loader Storage Unit (LSU) . . . . . 5-7.3.5
Loading OS/32 . . . . . 4-1.3.5
Loading Procedure, Software Installation Tape . . . . . 4-3.4
Local or Either Control . . . . . 5-14.2.6
Log Amplifier Detector . . . . . 5-4.5.3
Function . . . . . Figure 5-1
Log Channel Video Detection . . . . . 5-4.2.1.7 5-4.3.7
IF Signal . . . . . 5-4.3.7.1
Multiple Output Log Amplifier - Detection . . . . . 5-4.3.7.2
Log Data . . . . . 5-5.3.1.2
Log Video Output . . . . . 5-4.8.2.3
Log Video Signal, Detection Processor . . . . . 5-4.5.4.2
Log/Linear Select MUX and Output Register . . . . . 5-5.4.3.7
Logic Probe Setup . . . . . 6-4.5.4
Long Pulse Data Correction . . . . . 6-6.28.2.1.6
Low Noise Amplifier Replacement Procedure . . . . . 6-5.52.14
Equipment and Tools Required . . . . . 6-5.52.14.1
Initial Conditions/Preliminary Setup . . . . . 6-5.52.14.2
Replacement Procedure . . . . . 6-5.52.14.3
LRU Alignment/Adjustment Index . . . . . Table 6-23
LSU Strapping . . . . . Figure 6-29
LVPS Loads . . . . . Table 6-7

## M

M1 . . . . . 6-4.8.3

| Subject | Paragraph Figure, Table Number |
|---|---|
| M2 | 6-4.8.4 |
| M3200 | |
| Advisory Messages | Table 4-39 |
| Cache Diagnostic (06-321) | 4-6.3.7<br>4-6.4.8 |
| CPU Diagnostic (06-319) | 4-6.3.6<br>4-6.4.7 |
| M3200 Error Messages | 6-4.7.4 |
| MAC Result Status Selection and Testing | 5-6.6.6 |
| Activate/Deactivate Function | 5-6.6.6.2 |
| MAC Status | 5-6.6.6.1 |
| MAC Status | 5-6.6.6.1 |
| Macro Address Counter | 5-6.7.1.2 |
| Macrocode Storage | 5-6.7.1 |
| Macro Address Counter | 5-6.7.1.2 |
| Memory Toggling | 5-6.7.1.1 |
| Macrocodes | 5-6.3.3.1 |
| Magnetic Tapes or Disks | 4-1.3.1.2 |
| Main Bearing Oil Sensor Replacement Procedure | 6-5.52.15 |
| Equipment and Tools Required | 6-5.52.15.1 |
| Initial Conditions/Preliminary Setup | 6-5.52.15.2 |
| Replacement Procedure | 6-5.52.15.3 |
| Main Memory Function | 5-7.4.4<br>5-7.5 |
| Main Setup Menu | Figure 6-50 |
| Maintenance | |
| Activity | 4-1.2.1 |
| Mandatory Alarms | 6-3.4.2.2 |
| Off-Equipment | 6-1.1.1.4 |
| On-Site | 6-1.1.1.2 |
| Organizational | 6-1.1.1.3 |
| Required Alarms | 6-3.4.2.3 |
| Terminal, RDA | 4-1.4 |
| VCP | 5-14.3.2 |
| Maintenance Aids Functional Description | 4-7.5 |
| Control Pedestal | 4-7.5.1 |
| Control Receiver/Signal Processor | 4-7.5.2 |
| DAU BITE Display | 4-7.5.3 |
| Download PSP | 4-7.5.4 |

Subject | Paragraph Figure, Table Number


Maintenance Concept . . . . . 6-1.1.1
General Maintenance . . . . . 6-1.1.1.1
Off-Equipment Maintenance . . . . . 6-1.1.1.4
On-Site Maintenance . . . . . 6-1.1.1.2
Organizational Maintenance . . . . . 6-1.1.1.3
Maintenance Console Interfaces . . . . . 1-3.3.9.1
Maintenance Log Data . . . . . Table 4-42
Maintenance Panel Assembly Replacement Procedure . . . . . 6-5.50
Equipment and Tools Required . . . . . 6-5.50.1
Initial Conditions/Preliminary Setup . . . . . 6-5.50.2
Replacement Procedure . . . . . 6-5.50.3
Maintenance Panel Controls and Indicators . . . . . 4-2.3.1
Maintenance Panel/DAU Functional Group . . . . . 6-4.8
Equipment and Tools Required . . . . . 6-4.8.1
Initial Conditions/Preliminary Setup . . . . . 6-4.8.2
M1 . . . . . 6-4.8.3
M2 . . . . . 6-4.8.4
Manual Control and Display . . . . . 1-3.5.3
Manual Drive Assembly . . . . . Figure 6-58
Manual Pedestal Control . . . . . 5-1 1.10.2
Mass Storage and Archiving . . . . . 5-2.9.2
Mass Storage and Archiving Function . . . . . 5-7.7
Archive II Controller . . . . . 5-7.7.5
Fixed Disk . . . . . 5-7.7.4
Optical Disk Controller . . . . . 5-7.7.2
SELCH . . . . . 5-7.7.1
Streaming Tape Drive . . . . . 5-7.7.3
Master Clear IOC and PSP Commands . . . . . 5-6.8.6.6
Master Clock, Frequency Generator . . . . . 5-4.4.2.1
Master Signal Generation . . . . . 5-2.4.3.1
5-4.2.2
5-4.4
Frequency Generator . . . . . 5-4.4.2
Functional Flow Diagram . . . . . Figure FO5-6
Receiver Interface . . . . . 5-4.4.1
Master Signal Generator . . . . . 5-2.4.3
Master Timing . . . . . 5-9.5.2

| Subject | Paragraph Figure, Table Number |
|---|---|
| Matched Bandpass Filter | 5-4.3.6.2 |
| Matched BP Filter Assy Replacement Procedure | 6-5.9 |
| Equipment and Tools Required | 6-5.9.1 |
| Initial Conditions/Preliminary Setup | 6-5.9.2 |
| Replacement Procedure | 6-5.9.3 |
| Measuring Path Loss | 6-6.31.2 |
| Example | 6-6.31.2.2 |
| Procedure | 6-6.31.2.1 |
| Memory Configuration Error | 4-1.3.6 |
| Memory Generation Control | 5-6.6.1 |
| AU Configuration Switches | 5-6.6.1.1 |
| MSB Address Bits | 5-6.6.1.2 |
| Memory Operations | 5-7.4.4 |
| Memory Toggling | 5-6.7.1.1 |
| Menu | |
| Area | 4-5.2.3 |
| Main Setup | Figure 6-50 |
| Selection and Error Message Paging | 4-7.2.4 |
| Messages | |
| System Fault | Table 4-56 |
| System Information | Table 4-55 |
| Messages, Broadcasts and Direct I/O on F-Path | 5-7.4.5 |
| Microinstruction Address | 5-6.7.4.2 |
| Microinstruction Bits | 5-6.7.4.1 |
| Microinstruction Word Shadow Register | 5-6.7.5.7<br>5-6.9.6.2 |
| Microprocessor | 5-11.3.7 |
| Address Information | 5-11.4.2 |
| Control | 5-11.6.2 |
| Control Memory | 5-11.4.1 |
| Microprogram Address Generation | 5-6.7.5 |
| Command Register | 5-6.7.5.1 |
| DEST BUS | 5-6.7.5.4 |
| External Branch Select Multiplexer | 5-6.7.5.6 |
| Interrupt Sync Register | 5-6.7.5.3 |
| Interrupt Vector Latch | 5-6.7.5.5 |
| Microinstruction Word Shadow Register | 5-6.7.5.7 |
| Pipeline Select Multiplexer | 5-6.7.5.2 |

| Subject | Paragraph Figure, Table Number |
|---|---|
| Microprogram Storage and Step Sequencer | 5-6.7.4 |
| Microinstruction Address | 5-6.7.4.2 |
| Microinstruction Bits | 5-6.7.4.1 |
| Microwave Delay Line Replacement Procedure | 6-5.22 |
| Equipment and Tools Required | 6-5.22.1 |
| Initial Conditions/Preliminary Setup | 6-5.22.2 |
| Replacement Procedure | 6-5.22.3 |
| Microwave Distribution | 5-10 |
| Antenna/Pedestal Assembly Waveguide Components | 5-10.3 |
| Electrical Equipment Shelter Waveguide Components | 5-10.2 |
| Flow Diagram | Figure FO5-22<br>Figure FO5-23 |
| On-Line Performance Monitoring | 5-10.4 |
| Minimum Discernible Signal | 6-6.28.2.2 |
| Equipment and Tools Required | 6-6.28.2.2.1 |
| Procedure | 6-6.28.2.2.2 |
| Miscellaneous Disk/Tape Operations | 4-3.2 |
| Disk/Tape Backup Procedure | 4-3.2.1<br>Table 4-24 |
| Display File Names Procedure | 4-3.2.3 |
| Fastchek Procedure | 4-3.2.2 |
| Mixer-Preamplifier | 5-4.3.6.1 |
| Mixer/Preamp Replacement Procedure | 6-5.8 |
| Equipment and Tools Required | 6-5.8.1 |
| Initial Conditions/Preliminary Setup | 6-5.8.2 |
| Replacement Procedure | 6-5.8.3 |
| MLOS Cabinet | 1-2.2.1 1 |
| Modes | 4-1.4.1 |
| Modulator | 5-2.2.3 |
| Pulse Assembly A12 | 5-3.4.4 |
| Monitor RDA Hardware | 1-3.3.2 |
| MSB Address Bits | 5-6.6.1.2 |
| MULT RE Signal | 5-6.6.5.1 |
| Multi-Output Log Amp Detector Replacement Procedure | 6-5.15<br>6-5.19 |
| Equipment and Tools Required | 6-5.15.1<br>6-5.19.1 |
| Initial Conditions/Preliminary Setup | 6-5.15.2<br>6-5.19.2 |
| Replacement Procedure | 6-5.15.3<br>6-5.19.3 |

Subject | Paragraph Figure, Table Number

Multi-Position IF Select Switch Replacement Procedure . . . . . 6-5.29
Equipment and Tools Required . . . . . 6-5.29.1
Initial Conditions/Preliminary Setup . . . . . 6-5.29.2
Replacement Procedure . . . . . 6-5.29.3
Multi-Position RF Select Switch Replacement Procedure . . . . . 6-5.28
Equipment and Tools Required . . . . . 6-5.28.1
Initial Conditions/Preliminary Setup . . . . . 6-5.28.2
Replacement Procedure . . . . . 6-5.28.3
Multiple Output Log Amplifier - Detection . . . . . 5-4.3.7.2
Multiplier Bypass Mode . . . . . 5-6.6.5.6
Multiplier Load Control Code . . . . . 5-6.6.5.2
Multiplier Output Latches . . . . . 5-6.6.5.4
Multiplier/Accumulator Calculation (MAC), Result Status Selection and Testing . . . . . 5-6.6.6
Multiplier/Accumulator Function . . . . . 5-6.3.2.1
5-6.6.5
Error Detection Circuitry . . . . . 5-6.6.5.5
Floating-Point Accumulator . . . . . 5-6.6.5.7
AC - Accumulator Control . . . . . 5-6.6.5.7.3
AF - Accumulator Function . . . . . 5-6.6.5.7.1
ALD - Accumulator Load . . . . . 5-6.6.5.7.2
FT - Feed Through Enable . . . . . 5-6.6.5.7.3
Input Registers . . . . . 5-6.6.5.3
MULT RE Signal . . . . . 5-6.6.5.1
Multiplier Bypass Mode . . . . . 5-6.6.5.6
Multiplier Load Control Code . . . . . 5-6.6.5.2
Multiplier Output Latches . . . . . 5-6.6.5.4
Multiplier/Accumulator Input Data Selection . . . . . 5-6.6.4
Selected Data . . . . . 5-6.6.4.1
XS Field . . . . . 5-6.6.4.2
MUX Bus . . . . . 5-7.6.1

## N

Name Type Form Menu . . . . . Figure 6-90
New Elevation Cut . . . . . 5-14.3.3.6
NEXRAD System Interface Diagram ICD . . . . . Figure FO7-1
Noise Contamination in Outer Annular Ring . . . . . Figure 6-3
Noise Path Calibration . . . . . 6-6.28.3.3.2.3

Subject — Paragraph Figure, Table Number

Noise Source Calibration . . . . . 6-6.28.3.3.2.4
RDA Adaptation Data Required . . . . . Table 6-33
Normal I/O Processing . . . . . 5-11.9.7
Normal Termination . . . . . 4-7.2.3.1
Numeric Keypad Control Keys . . . . . 4-1.4.4.2
NWS Redundant RDA Shelter Assembly, ICD . . . . . Figure FO7-7
NWS Redundant Systems
Switching Between Redundant Channels . . . . . 4-5.4.11.3
Locally
MSCF . . . . . Table 4-52
Remotely
MSCF . . . . . Table 4-50

## O

ODC Strapping . . . . . Figure 6-34
Odd Parity . . . . . 5-6.6.8.1
Off-Equipment Maintenance . . . . . 6-1.1.1.4
Off-Line . . . . . 5-4.6.2
Off-Line Calibration Checks . . . . . 6-6.28.2
Off-Line Calibration Data . . . . . Table 6-31
Off-Line Calibration Procedures . . . . . 6-6.28.3
Off-Line Diagnostics . . . . . 5-9.9
5-11.10
Manual Pedestal Control . . . . . 5-11.10.2
Pedestal Diagnostics . . . . . 5-11.10.1
Tests . . . . . 5-5.6
Off-Line Fault Isolation . . . . . 5-7.12
Diagnostic . . . . . 5-4.10
Off-Line Operate (OLOP) . . . . . 4-5.4.4.1
Oil Tank Component Board A1 . . . . . 5-3.3.12
On-Line . . . . . 5-4.6.1
On-Line Calibration and Performance Checks . . . . . 5-4.9
Clutter Suppression Check . . . . . 5-4.9.4
DC Offset and Noise Calibration . . . . . 5-4.9.5

Subject | Paragraph Figure, Table Number

On-Line Calibration and Performance Checks - Cont.
IF Attenuator Calibration and I & Q Amplitude and Phase Balance . . . . . 5-4.9.6
Linear and Log Channel Reflectivity Calibration . . . . . 5-4.9.1
Reflectivity Calibration Check . . . . . 5-4.9.2
System Noise Temperatures . . . . . 5-4.9.7
Velocity and Width (Spectrum Check) . . . . . 5-4.9.3

On-Line Calibration Data
Long Pulse . . . . . Table 6-32
Short Pulse . . . . . Table 6-27

On-Line Performance Checks . . . . . 5-5.5
Checks During Radial Processing . . . . . 5-5.5.1
Checks During Startup, Full Restart, Fast Startup . . . . . 5-5.5.2

On-Line Performance Monitoring
Antenna Positioning Electronics . . . . . 5-11.9
Angle Rate Match Flag . . . . . 5-11.9.9
Antenna Positioning Servo . . . . . 5-11.9.8
Cold Startup or Full Restart Command . . . . . 5-11.9.5
CPCI 01 (RDASC) Software . . . . . 5-11.9.4
Fast Restart . . . . . 5-11.9.6
Normal I/O Processing . . . . . 5-11.9.7
Park Pedestal Command . . . . . 5-11.9.10
Pedestal BIT Data . . . . . 5-11.9.3
Self-Test 1 . . . . . 5-11.9.1
Self-Test 2 . . . . . 5-11.9.2
Microwave Distribution . . . . . 5-10.4
Circulator Overtemp . . . . . 5-10.4.4
Spectrum Filter Pressure . . . . . 5-10.4.5
Waveguide ARC/VSWR . . . . . 5-10.4.3
Waveguide Humidity/Pressure Fault . . . . . 5-10.4.6
Waveguide Switch Failure . . . . . 5-10.4.1
WG/PFN Transfer Interlock . . . . . 5-10.4.2
RDA Calibration . . . . . 5-6.2.1
RDASC . . . . . 5-7.11
5-9.8

On-Line Status and Performance Monitoring . . . . . 6-1.1.2

On-Site Maintenance . . . . . 6-1.1.1.2

One Degree Radials . . . . . 5-6.4.3

Operability Test . . . . . 6-3.2.3

Operating Modes . . . . . 4-4.2

Subject — Paragraph Figure, Table Number

Operating System Command and Data Entry Prompts . . . . . 4-1.3.2
Operating Under Backup Power . . . . . 5-14.2.20.7
Operational/Maintenance Mode Selection . . . . . 4-5.4.4
Operator Inputs . . . . . 4-7.2.1
Operator Testing . . . . . 4-1.4.5
Optical Disk Controller . . . . . 5-7.7.2
Option Catagories (Parameters) . . . . . 4-1.4.6.2
Options in Control Receiver/Signal Processor . . . . . Table 4-54
Organizational Maintenance . . . . . 6-1.1.1.3
OS/32 . . . . . 4-1.3
4-1.3.1.4
Basic Concepts . . . . . 4-1.3.1
Command Format and Error Messages . . . . . 4-3.5
Command Format and Error Responses . . . . . Table 4-30
CPCI 10 . . . . . 1-3.2
Error Description . . . . . 4-8.5
Error Messages . . . . . 4-3.5
File Descriptors . . . . . 4-1.3.7.3
General Syntax Rules . . . . . 4-1.3.7.1
Loading . . . . . 4-1.3.5
Memory Configuration Error . . . . . 4-1.3.6
Operating System Command and Data Entry Prompts . . . . . 4-1.3.2
Operator Command Error Messages . . . . . Table 4-31
Secondary Features . . . . . 4-1.3.3
Statement Syntax Conventions . . . . . 4-1.3.7.2
Syntax . . . . . 4-1.3.7
System Console Special Key Sequence . . . . . 4-1.3.4
Output and Status Memory . . . . . 5-6.8.1 1
Output Data Multiplexer . . . . . 5-6.6.2.2
Output Memory Bank . . . . . 5-6.8.9.3
Output Memory Write Data Selection . . . . . 5-6.8.10
Output Memory Write Sequencer . . . . . 5-6.8.9.2
Override Radiate Inhibit (OVRI) . . . . . 4-5.4.4.4
Override Radiate Inhibit Command . . . . . 5-14.2.21.2

## P

Paging Line . . . . . 4-5.2.4

Subject — Paragraph Figure, Table Number


Parameter Options . . . . . Table 4-1

Parity . . . . . 5-7.4.3

Park Pedestal
- Command . . . . . 5-11.9.10
- Function . . . . . 4-7.5.1.1

Passboard Edge Velocity . . . . . 5-5.3.2.6

Passive Diode Limiter Replacement Procedure . . . . . 6-5.52.19
- Equipment and Tools Required . . . . . 6-5.52.19.1
- Initial Conditions/Preliminary Setup . . . . . 6-5.52.19.2
- Replacement Procedure . . . . . 6-5.52.19.3

Path Loss Measurement . . . . . 6-6.31, Table 6-39
- Alignment Procedures . . . . . 6-6.31.4
- Equipment and Tools Required . . . . . 6-6.31.1
- Measuring Path Loss . . . . . 6-6.31.2
- RIOS . . . . . 6-6.31.3, Table 6-40
- Waveguide . . . . . 6-6.32

Path Loss/Value . . . . . Table 6-41

Peak Power Measurement . . . . . 5-3.9.2.3

Pedestal
- Assembly . . . . . 1-2.2.2.4
- BIT Data . . . . . 5-11.9.3
- Control . . . . . 5-9.3.6, 5-13.4
- Diagnostics . . . . . 1-3.5.1.4, 4-7.3.4, 5-11.10.1
  - Subtest 1 - Voltage Check . . . . . 5-11.10.1.1
  - Subtest 2 - Self-test 1 . . . . . 5-11.10.1.2
  - Subtest 3 - Pedestal BIT Check . . . . . 5-11.10.1.3
  - Subtest 4 - Self-test 2 . . . . . 5-11.10.1.4
- Disable . . . . . 1-2.2.2.7
- Interface . . . . . 1-3.3.9.2
- Voltage . . . . . 5-13.6

Pedestal Assembly . . . . . Figure 6-56
- Azimuth Assembly . . . . . Figure 6-57
- Elevation Assembly . . . . . Figure 6-61

Pedestal BIT Data . . . . . Table 5-28

Subject — Paragraph Figure, Table Number

Pedestal Power Amplifier Unit
Controls and Indicators . . . . . 4-2.3.5
Figure 4-8
Table 4-8

Pedestal Slip Ring Brush Block Assembly Replacement . . . . . 6-5.69
Equipment and Tools Required . . . . . 6-5.69.1
Initial Conditions/Preliminary Setup . . . . . 6-5.69.2
Replacement Procedure . . . . . 6-5.69.3

Pedestal Stow Pins Engaged . . . . . Figure 6-37
Figure 6-41
Figure 6-59

Pedestal/Power Amplifier Unit Replacement Procedure . . . . . 6-5.45
Equipment and Tools Required . . . . . 6-5.45.1
Initial Conditions/Preliminary Setup . . . . . 6-5.45.2
Replacement Procedure . . . . . 6-5.45.3

Performance Monitoring Fault Localization . . . . . 5-2.8.4.4

Peripheral Device Interface Function . . . . . 5-7.8
RS-232 Communication with DAU Interface . . . . . 5-7.8.1
RS-232 Communication with RDA Maintenance Console . . . . . 5-7.8.2
RS-232 Communication with Servo Antenna Positioning . . . . . 5-7.8.3

Peripheral Interface Adapter . . . . . 5-2.5.5

Ping-Pong Input Memory . . . . . 5-6.6.2.1

Ping-Pong/Scratch Pad Memory . . . . . 5-6.6.2
Output Data Multiplexer . . . . . 5-6.6.2.2
Ping-Pong Input Memory . . . . . 5-6.6.2.1

Pipeline Select Multiplexer . . . . . 5-6.7.5.2

Plug-in Frequency Unit Replacement Procedure . . . . . 6-5.38
Equipment and Tools Required . . . . . 6-5.38.1
Initial Conditions/Preliminary Setup . . . . . 6-5.38.2
Replacement Procedure . . . . . 6-5.38.3

Port Name and Parameters . . . . . Table 6-42

Position Display . . . . . 4-7.5.1.2

Post Charge Regulator A8 . . . . . 5-3.4.5

Power and Low Voltage Distribution . . . . . 5-2.2.2

Power Commands . . . . . 5-14.2.20.1

Subject — Paragraph Figure, Table Number


Power Control . . . . . 5-14.2.20
- Command . . . . . 5-14.2.20.3
- Command Switchover . . . . . 5-14.2.20.6
- Operating Under Backup Power . . . . . 5-14.2.20.7
- Power Commands . . . . . 5-14.2.20.1
- Power Source Switchover . . . . . 5-14.2.20.5
- RDA Power Subsystem . . . . . 5-14.2.20.2
- Valid Commands . . . . . 5-14.2.20.4

Power Distribution
- Diagram
  - RDA Data Processor Cabinet . . . . . Figure FO7-14
  - RDA Receiver Cabinet . . . . . Figure FO7-13
- Diagrams Section . . . . . 7-3
- Panel . . . . . 5-3.7.1
- RDA Equipment Power Distribution . . . . . 5-12.3
- RDA Group AC Power Generation and Distribution . . . . . 5-12.2
- RDADP Cabinet . . . . . 5-12.3.2
  - AC Power Distribution . . . . . 5-12.3.2.1
  - DC Power Distribution . . . . . 5-12.3.2.2

Power Measurement
- Average . . . . . 5-3.9.2.2
- Peak . . . . . 5-3.9.2.3

Power Meter Calibration . . . . . 6-6.8 6-6.22
- Equipment and Tools Required . . . . . 6-6.22.1
- Initial Conditions/Preliminary Setup . . . . . 6-6.22.2
- Procedure - Part 1 . . . . . 6-6.22.3
- Procedure - Part 2 . . . . . 6-6.22.4

Power Meter Zero . . . . . 5-3.9.2.1

Power Monitor Consistency Check . . . . . 6-6.28.1.3
- Equipment and Tools Required . . . . . 6-6.28.1.3.1
- Off-line Procedure . . . . . 6-6.28.1.3.3
- On-line Procedure . . . . . 6-6.28.1.3.2

Power Monitor Replacement Procedure . . . . . 6-5.27
- Equipment and Tools Required . . . . . 6-5.27.1
- Initial Conditions/Preliminary Setup . . . . . 6-5.27.2
- Replacement Procedure . . . . . 6-5.27.3

Power Outage Occurrence . . . . . 5-14.2.19.3

Power Source Switchover . . . . . 5-14.2.20.5

Subject — Paragraph Figure, Table Number


Power Subsystem
- Enclosure and Backpanel Assembly . . . . . 5–12.3.2.1.1.3
- Replaceable Components . . . . . Table 5–29
- Swing–Out . . . . . 4–2.3.2

Power Supplies Replacement Procedure . . . . . 6–5.58
- Equipment and Tools Required . . . . . 6–5.58.1
- Initial Conditions/Preliminary Setup . . . . . 6–5.58.2
- Replacement Procedure . . . . . 6–5.58.3

Power Supply Fan Tray . . . . . 5–12.3.2.1.1.4

Power Supply Fan Tray Replacement Procedure . . . . . 6–5.59.8

Power Supply Outputs . . . . . 5–12.3.1.2

Power Supply Replacement Procedure . . . . . 6–5.44
6–5.55
6–5.56
6–5.57
- Equipment and Tools Required . . . . . 6–5.44.1
6–5.55.1
6–5.56.1
6–5.57.1
- Initial Conditions/Preliminary Setup . . . . . 6–5.44.2
6–5.55.2
6–5.56.2
6–5.57.2
- Replacement Procedure . . . . . 6–5.44.3
6–5.55.3
6–5.56.3
6–5.57.3

Power Switching (STAP/STUP) . . . . . 4–5.4.6

Power Transformer A7A1T4 . . . . . 5–3.3.5

Power Turn On . . . . . 1–3.4.5.1
- Reinitialization . . . . . 5–6.4.1

Power Turn–Off . . . . . 6–5.2.3

Pre–Select BP Filter Replacement Procedure . . . . . 6–5.7
- Equipment and Tools Required . . . . . 6–5.7.1
- Initial Conditions/Preliminary Setup . . . . . 6–5.7.2
- Replacement Procedure . . . . . 6–5.7.3

Prescaler and A/D Converter Test Selection . . . . . 5–5.4.7.2

Prescaling . . . . . 5–5.3.1

| Subject | Paragraph Figure, Table Number |
|---|---|
| Preventive Maintenance | |
| Index | Table 6–1 |
| Procedures | 6–1.2 |
| Primary Fault Isolation | |
| Fault Isolation Flowcharts | 6–3.2 |
| Flowchart Notes | 6–3.3 |
| Flowcharts | 6–3.6 |
| Operational Checks | 6–1.3 |
| RDA Alarms | 6–3.4 |
| RDASC Error Messages | 6–3.5 |
| Primary Outputs Developed by The PSP | 5–2.8.5 |
| Printed Circuit Cards | 6–5.1.2 |
| Procedure | |
| AGC Threshold Voltage Adjustment | 6–6.24.4.3 |
| Calibration of Internal Noise Source | 6–6.28.3.3.2 |
| CW Substitution Reflectivity Accuracy Verification | 6–6.28.2.5.2 |
| CW Test Path Calibration | 6–6.28.3.1.2 |
| I/Q Phase Detector DC Offset Adjustment | 6–6.24.3.3 |
| I/Q Phase Detector Gain Adjustment | 6–6.24.2.3 |
| Klystron Output Path Calibration | 6–6.28.3.5.1.2 |
| Minimum Discernible Signal | 6–6.28.2.2.2 |
| MISC CAL LOSS KLYSTRON OUT TARGET Calibration | |
| Long Pulse | 6–6.28.3.5.3.3 |
| Short Pulse | 6–6.28.3.5.3.2 |
| Noise Path and Noise Source Calibration | 6–6.28.3.3.2 |
| Power Monitor Consistency Check | 6–6.28.1.3.2 |
| Reflectivity Error Check | |
| Inclement Weather | 6–6.28.2.1.5 |
| Preferred | 6–6.28.2.1.4 |
| RF Drive Path Calibration | 6–6.28.3.2.2 |
| RF Test Attenuator Calibration | 6–6.28.3.4.2 |
| Sampling Phase Calibration | 6–6.28.3.5.2.2 |
| Solar Calibration | 6–6.28.3.6<br>6–6.28.3.6.2 |
| Standalone Dial Port Modem, Setup Procedure | 6–6.35.3 |
| Suncheck Measurements | 6–6.28.1.5.3 |
| Processing Element | 5–7.4.8 |
| Processing System Bus Structure | 5–7.2 |
| Synchronous Operation | 5–7.2.1 |
| Processor Operations | 4–1.3.1.3 |

Subject — Paragraph Figure, Table Number

Processor to DAU Data . . . . . Table 5-18
Program Control . . . . . 5-2.8.4.2
Program Loading Introduction . . . . . 4-6.4.2
Programmable Signal Processor Tasks . . . . . Table 1-9
PROM BURN Execution Display Sequence . . . . . Figure 6-15
PRT Length Trade-Off . . . . . 5-2.8.3.1
PS Test Select Signal . . . . . 5-5.4.3.1
PSD/Notch Filter Waveform . . . . . Figure 5-5
PSP . . . . . 5-2.8
5-2.8.3.3
Commands . . . . . 5-6.8.6.6
Diagnostic . . . . . 1-3.5.1.6
4-7.3.6
5-6.8.5
Diagnostic Interface . . . . . 5-6.3.5.1
Functional Block Diagram . . . . . Figure FO5-11
Functional Group . . . . . 6-4.6
Hardware . . . . . 5-2.8.2
Inputs . . . . . 5-2.8.1
Output and Status Memory Control . . . . . 5-6.8.9
Address/Microinstruction Shadow Register . . . . . 5-6.8.9.1
Output Memory Bank . . . . . 5-6.8.9.3
Output Memory Write Sequencer . . . . . 5-6.8.9.2
Primary Outputs Developed By the PSP . . . . . 5-2.8.5
Secondary Fault Isolation Flowchart . . . . . Figure 6-10
Software Aspects of Converting Video to Base Data . . . . . 5-2.8.3
Tasks . . . . . 5-2.8.4
Table 1-9

PSP Function Description
ACU . . . . . 5-6.7
AU . . . . . 5-6.6
Input Signal Selection and Distribution . . . . . 5-6.5
Input/Output Controller (IOC) . . . . . 5-6.8
PSP Functions . . . . . 5-6.3
PSP Overview . . . . . 5-6.2
PSP Timing . . . . . 5-6.4
Standard Maintenance Interface . . . . . 5-6.9

| Subject | Paragraph Figure, Table Number |
|---|---|
| PSP Functions | 5-6.3 |
| ACU | 5-6.3.3 |
| AU Function | 5-6.3.2 |
| Input Signal Selection and Distribution Function | 5-6.3.1 |
| Input/Output Controller (IOC) Function | 5-6.3.4 |
| Standard Maintenance Interface | 5-6.3.5 |
| PSP Overview | 5-6.2 |
| Batch Cut Processing | 5-6.2.5 |
| Contiguous Doppler with Range Ambiguity Resolution Cut Processing | 5-6.2.4 |
| Contiguous Doppler without Range Ambiguity Resolution Cut Processing | 5-6.2.3 |
| Contiguous Surveillance Cut Processing | 5-6.2.2 |
| RDA Calibration and On-Line Performance Monitoring | 5-6.2.1 |
| PSP Source/Destination Select Decodes | 5-6.7.6 |
| PSP Timing | 5-6.4 |
| Elevation Layer | 5-6.4.2 |
| Stop | 5-6.4.6 |
| Elevation Layer Startup | 5-6.4.5 |
| One Degree Radials | 5-6.4.3 |
| Power Turn-On (Reinitialization) | 5-6.4.1 |
| Steady State Base Data Generation | 5-6.4.4 |
| PSP/HSP Card Extractor Tool (Engaged) | Figure 6-12 |
| PSP/HSP Card Replacement Procedure | 6-5.4.3 |
| Equipment and Tools Required | 6-5.4.3.1 |
| Initial Conditions/Preliminary Setup | 6-5.4.3.2 |
| Replacement Procedure | 6-5.4.3.3 |
| PSP/HSP Layout | Figure 6-11 |
| PSP/HSP Sample LRU Layout Schematic (Top View) | Figure 6-13 |
| PSP/RDASC | |
| Data Transfer and Control Function | 5-6.3.1.2 |
| Interface Function | 5-7.9 |
| PSPI | 5-7.9.1 |
| SELCH | 5-7.9.2 |
| PSPI | 5-7.9.1 |
| Strapping | Figure 6-33 |
| Test (06-290) | 4-6.3.4 |
| PSPI/IOC CMD CODE Bus | 5-6.8.6.1 |
| Pulse Transformer A7T1 | 5-3.3.6 |


## Q


| | |
|---|---|
| Quick Reference Chart | 6-3.2.4 |

Subject — Paragraph Figure, Table Number

## R


R1 . . . . . 6-4.4.1
R2 . . . . . 6-4.4.2
R3 . . . . . 6-4.4.3
R4 . . . . . 6-4.4.4
R5 . . . . . 6-4.4.5
R6 . . . . . 6-4.4.6
R7 . . . . . 6-4.4.7
R8 . . . . . 6-4.4.8
R9 . . . . . 6-4.4.9
R10 . . . . . 6-4.4.10
R11 . . . . . 6-4.4.11
R12 . . . . . 6-4.4.12
Radar
Data Collection . . . . . 5-14.2.19.5
Data Output Buffer Overflow . . . . . 5-14.2.13
Pedestal . . . . . 1-2.2.2.6
Radar Receiver . . . . . 1-2.2.4
4-2.2
Figure 1-8
Component Layout (Rear View) . . . . . Figure 6-75
ICD . . . . . Figure FO7-9
Radar Transmitter . . . . . 1-2.2.3
Figure 1-7
Radials . . . . . 1-3.4.5.4
Radiation Hazard Zones . . . . . Figure SS-1
Radome . . . . . 1-2.2.10
Figure 1-13
RALU . . . . . 5-6.3.3.3
Range Cell Counter . . . . . 5-6.5.1.3
Raw Data . . . . . 5-5.2.3
RCVR CLKs, Receiver Interface . . . . . 5-4.4.1.1
RDA, Maintenance Panel . . . . . Figure 6-82

Subject | Paragraph Figure, Table Number

RDA 1 . . . . . 6-4.7.1
RDA 2 . . . . . 6-4.7.2
RDA Adaptation Data Required for Noise Source Calibration . . . . . Table 6-33
RDA Alarms . . . . . 6-3.4
Alarm Categories and Maintenance Modes . . . . . 6-3.4.2
Alarm Types . . . . . 6-3.4.1
Inoperative . . . . . Table 6-3
Maintenance Mandatory . . . . . Table 6-4
Maintenance Required . . . . . Table 6-5
Secondary Alarms . . . . . Table 6-6
RDA Application Software . . . . . 5-14.2.17.4
RDA Applications Mode Operations
Commands . . . . . 4-5.3
Introduction . . . . . 4-5.1
RDA Control . . . . . 4-5.6
RDA Operational States . . . . . 4-5.5
RDA Operations/Maintenance Tasks . . . . . 4-5.4
Screen Use and Format . . . . . 4-5.2
Section . . . . . 4-5
RDA Auxiliary Systems . . . . . 5-1.4
RDA Calibration . . . . . 5-2.8.4.3
5-6.2.1
Adaptation Data Required . . . . . Table 6-26
RDA Calibration and On-Line Performance Monitoring . . . . . 5-6.2.1
RDA Control . . . . . 4-5.6
6-5.3.2.1.3
Commands . . . . . Table 4-53
Operating State . . . . . 5-14.2.17.2
RDA Control/Diagnostic System Operation . . . . . 4-4
RDA Data Processor
Clock Time Set Procedure . . . . . Table 4-28
ICD . . . . . Figure FO7-10
RDA Data Processor Cabinet Power Distribution . . . . . 5-12.3.2
Diagram . . . . . Figure FO7-14
RDADP Cabinet AC Power Distribution . . . . . 5-12.3.2.1
RDADP Cabinet DC Power Distribution . . . . . 5-12.3.2.2
RDA Data Processor Clock Time Set Procedure . . . . . 4-3.3
RDA Data Processor Power Supply Description . . . . . 6-6.7

Subject — Paragraph Figure, Table Number

RDA Electrical Equipment Shelter Configuration . . . . . Figure 1-3
FAA Redundant . . . . . Figure 1-4
NWS Redundant . . . . . Figure 1-5
RDA Equipment Description . . . . . 1-2.2
Antenna/Pedestal . . . . . 1-2.2.2
Electrical Equipment Shelter . . . . . 1-2.2.7
Equipment Shelter . . . . . 1-2.2.1
MLOS Cabinet . . . . . 1-2.2.11
Radar Receiver . . . . . 1-2.2.4
Radar Transmitter . . . . . 1-2.2.3
Radome . . . . . 1-2.2.10
RDA Generator Shelter . . . . . 1-2.2.8
RDADP Cabinet . . . . . 1-2.2.5
Steel Tower . . . . . 1-2.2.9
TPMS Cabinet . . . . . 1-2.2.12
Waveguide Pressurization Unit . . . . . 1-2.2.6
RDA Equipment Power Distribution . . . . . 5-12.3
RDA Data Processor Cabinet Power Distribution . . . . . 5-12.3.2
RDA Receiver Cabinet Power Distribution . . . . . 5-12.3.1
RDA Fault Isolation Flowchart . . . . . 6-3.2.2
Figure 6-2
RDA Generator Shelter . . . . . 1-2.2.8
RDA Group . . . . . Figure 1-1
Block Diagram . . . . . Figure FO5-1
Redundant . . . . . Figure FO5-2
Capabilities . . . . . Table 1-5
Capabilities and Limitations . . . . . 1-1.4
Characteristics . . . . . Table 1-6
Diagnostic Procedures . . . . . 4-6.4
06-127 - Common RS-232 Interface Off-Line Test Program . . . . . 4-6.4.3
06-290 - PSPI Board Test . . . . . 4-6.4.5
06-297 - IPC Diagnostic . . . . . 4-6.4.6
06-319 - M3200 CPU Diagnostic . . . . . 4-6.4.7
06-321 - M3200 Cache Diagnostic . . . . . 4-6.4.8
06-325 - Composite Memory Module (CMM) Diagnostic . . . . . 4-6.4.9
4-6.4.10
Initialization . . . . . 4-6.4.1
Program Loading Introduction . . . . . 4-6.4.2
VMEbus to Concurrent I/O Bus Interface Diagnostic . . . . . 4-6.4.4
Diagnostic Programs . . . . . 4-6.2
06-127 - Common RS-232 Interface Off-Line Test Program . . . . . 4-6.2
4-6.3.2

| Subject | Paragraph Figure, Table Number |
|---|---|
| RDA Group - Cont. | |
| Diagnostic Programs - Cont. | |
| 06-145 - Diagnostic Loader/Executive | 4-6.2, 4-6.3.3 |
| 06-290 - PSPI Board Test | 4-6.2, 4-6.3.4 |
| 06-297 - IPC Diagnostic | 4-6.2, 4-6.3.5 |
| 06-319 - M3200 CPU Diagnostic | 4-6.2, 4-6.3.6 |
| 06-321 - M3200 Cache Diagnostic | 4-6.2, 4-6.3.7 |
| 06-325 - Composite Memory Module (CMM) Diagnostic | 4-6.2, 4-6.3.8 |
| 91-424 - BTC - 501/504 Diagnostic | 4-6.2 |
| 91-539 - Optical Disk System Diagnostic | 4-6.2, 4-6.3.9 |
| VMEbus to Concurrent I/O Bus Interface Diagnostic | 4-6.2, 4-6.3.1 |
| Equipment | 1-1.2, 1-2.1 |
| Interlocks | Table 4-23 |
| Physical Dimensions and Weights | Table 1-2 |
| Power Requirements | Table 1-3 |
| Reference Designations | Table 1-1 |
| Reference Publications | 1-4.1, Table 1-10 |
| Restoration Procedures | 4-6.5 |
| RDA Group AC Power Generation and Distribution | 5-12.2 |
| Auto-Transfer Switch | 5-12.2.1 |
| Equipment Shelter Main Power Distribution Panel | 5-12.2.3 |
| FAA Redundant | 5-12.2.5 |
| NWS Redundant | 5-12.2.8 |
| Equipment Shelter Secondary Power Distribution Panel | 5-12.2.4 |
| Equipment Shelter Secondary Power Distribution Panel #1 | |
| FAA Redundant | 5-12.2.6 |
| NWS Redundant | 5-12.2.9 |
| Equipment Shelter Secondary Power Distribution Panel #2 | |
| FAA Redundant | 5-12.2.7 |
| NWS Redundant | 5-12.2.10 |
| Equipment Shelter Secondary Power Distribution Panel #3 | |
| NWS Redundant | 5-12.2.11 |
| Generator Shelter Power Distribution Panel | 5-12.2.2 |

Subject — Paragraph Figure, Table Number

RDA Group Block Diagram Description . . . . . 5-2
Antenna . . . . . 5-2.3
Antenna Positioning Electronics . . . . . 5-2.5
HSP . . . . . 5-2.7
PSP . . . . . 5-2.8
RDA Status and Control Interface . . . . . 5-2.6
RDASC Processing . . . . . 5-2.9
Receiver . . . . . 5-2.4
Transmitter . . . . . 5-2.2
RDA Group Shutdown . . . . . 6-5.3
6-5.3.1
Procedure . . . . . Table 6-13
RDA Group Software . . . . . 1-3.1
RDA Group Startup . . . . . 6-5.3
6-5.3.2
Procedure . . . . . Table 6-15
Redundant Systems
Data Links . . . . . 6-5.3.2.1.2
RDA Control . . . . . 6-5.3.2.1.3
RDADP Startup . . . . . 6-5.3.2.1.6
Switching . . . . . 6-5.3.2.1.1
System/Applications Consoles . . . . . 6-5.3.2.1.4
Transmitter Startup . . . . . 6-5.3.2.1.5
Special Considerations . . . . . 6-5.3.2.1
RDA ICD . . . . . Figure FO7-3
Redundant . . . . . Figure FO7-4
RDA Interfaces . . . . . 1-2.3
RDA Interprocessor Message Format . . . . . Figure 5-26
RDA M3200 Processor Assembly Termination Locations . . . . . Table 6-18
RDA M3200 Processor Diagnostic Functional Description . . . . . 4-6.3
CMM Diagnostic (06-325) . . . . . 4-6.3.8
Common RS-232 Interface Off-Line Test Program (06-127) . . . . . 4-6.3.2
Diagnostic/Loader Executive (06-145) . . . . . 4-6.3.3
IPC Diagnostic (06-297) . . . . . 4-6.3.5
M3200 Cache Diagnostic (06-321) . . . . . 4-6.3.7
M3200 CPU Diagnostic (06-319) . . . . . 4-6.3.6
Optical Disk System Diagnostic (91-539) . . . . . 4-6.3.9
PSPI Test (06-290) . . . . . 4-6.3.4
VMEbus to Concurrent I/O Bus Interface Diagnostic . . . . . 4-6.3.1

Subject — Paragraph Figure, Table Number

RDA M3200 Processor Diagnostic Operation
RDA Group Diagnostic Programs . . . . . 4-6.2
RDA M3200 Processor Diagnostic Functional Description . . . . . 4-6.3
RDA M3200 Processor Diagnostic Procedures . . . . . 4-6.4
RDA Restoration Procedure . . . . . 4-6.5

RDA M3200 Processor Diagnostic Procedures . . . . . 4-6.4
06-127 Common RS-232 Interface Off-Line Test Procedure . . . . . 4-6.4.3
06-290 PSPI Test . . . . . 4-6.4.5
06-297 IPC Diagnostic . . . . . 4-6.4.6
06-319 M3200 Diagnostic Procedure . . . . . 4-6.4.7
06-321 M3200 Cache Diagnostic . . . . . 4-6.4.8
06-325 CMM Diagnostic . . . . . 4-6.4.9
4-6.4.10
Initialization Procedure . . . . . 4-6.4.1
Program Loading Introduction . . . . . 4-6.4.2
VMEbus to Concurrent I/O Bus Interface Diagnostic . . . . . 4-6.4.4

RDA Main Menu . . . . . 4-1.2.2

RDA Maintenance Panel, Controls and Indicators . . . . . Figure 4-4
Table 4-3

RDA Maintenance Procedures Initial Setup . . . . . 6-6.15
Equipment and Tools Required . . . . . 6-6.15.1
Initial Conditions/Preliminary Setup . . . . . 6-6.15.2
Initial Setup Procedures . . . . . 6-6.15.3

RDA Maintenance Terminal . . . . . 1-2.2.5.5
4-1.4
Commands . . . . . Table 4-41
Configuration . . . . . 4-1.4.6
Controls and Indicators . . . . . 4-2.3.4
Figure 4-7
Table 4-7
Keyboard Layout . . . . . 4-1.4.2
Modes . . . . . 4-1.4.1
Operator Testing . . . . . 4-1.4.5
Screen Display . . . . . 4-1.4.3
Terminal Operation . . . . . 4-1.4.4

RDA Maintenance Terminal Replacement Procedure . . . . . 6-5.68
Equipment and Tools Required . . . . . 6-5.68.1
Initial Conditions/Preliminary Setup . . . . . 6-5.68.2
Replacement Procedure . . . . . 6-5.68.3
Terminal Setup Configuration Procedure . . . . . 6-5.68.4

Subject — Paragraph Figure, Table Number

RDA Off-Line Operate State . . . . . 5-14.2.3
RDA Operate State . . . . . 5-14.2.1
RDA Operating Modes . . . . . 5-14.2.15
RDA Operating Modes and States . . . . . 4-1.2
Maintenance Activity . . . . . 4-1.2.1
RDA Main Menu . . . . . 4-1.2.2
RDA Status and Control Processor . . . . . 4-1.2.3
RDA Operational States . . . . . 4-5.5
RDA Operations/Maintenance Tasks . . . . . 4-5.4
Archiving . . . . . 4-5.4.9
Display/Enter Log Data . . . . . 4-5.4.7
Enable Interference Suppression Unit/Disable Interference Suppression Unit . . . . . 4-5.4.4.3
Inspect/Change Adaptation Data . . . . . 4-5.4.10
Table 4-44
Off-Line Operate . . . . . 4-5.4.4.1
Operational/Maintenance Mode Selection . . . . . 4-5.4.4
Power Switching . . . . . 4-5.4.6
Restart . . . . . 4-5.4.3
Select Mode . . . . . 4-5.4.4.2
Send/Display Message . . . . . 4-5.4.4.4
4-5.4.5
Shutdown . . . . . 4-5.4.2
Startup . . . . . 4-5.4.1
Status Monitoring . . . . . 4-5.4.8
Switching Between Redundant Channels . . . . . 4-5.4.11
FAA Redundant Systems
With MSCF Installed . . . . . 4-5.4.11.2
NWS Redundant Systems . . . . . 4-5.4.11.3
RDA Playback State . . . . . 5-14.2.4
RDA Power Monitor Bias Adjustment . . . . . 6-6.27
Description . . . . . 6-6.14
Equipment and Tools Required . . . . . 6-6.27.1
Initial Conditions/Preliminary Setup . . . . . 6-6.27.2
Procedure . . . . . 6-6.27.3
RDA Power Subsystem . . . . . 5-14.2.20.2
RDA Power Supplies, Controls and Indicators . . . . . Figure 4-14
Table 4-14

| Subject | Paragraph Figure, Table Number |
|---|---|
| RDA Receiver Cabinet Power Distribution | 5-12.3.1 |
| Diagram | Figure FO7-13 |
| Power Supply Outputs | 5-12.3.1.2 |
| Receiver Cabinet AC Distribution | 5-12.3.1.1 |
| RDA Replacement Procedure Index | Table 6-12 |
| RDA Restoration | 6-6.16 |
| Equipment and Tools Required | 6-6.16.1 |
| Initial Conditions/Preliminary Setup | 6-6.16.2 |
| Procedure | 4-6.5<br>6-6.16.3 |
| RDA SCSI Layout | Figure 6-46 |
| RDA Servo Interface | 5-1 1.8 |
| Functional Flow Diagram | Figure FO5-26 |
| RDA Shelter Assembly, ICD | Figure FO7-5 |
| RDA Signal Processing Software Program (CPCI 02) | 1-3.4 |
| Base Data Processing Modes | 1-3.4.6 |
| Computer Base Data | 1-3.4.1 |
| HSP Tasks | 1-3.4.7 |
| Performance Monitoring/Fault Localization | 1-3.4.4 |
| Program Control | 1-3.4.5 |
| RDA Calibration | 1-3.4.3 |
| RDASC Processor Interface | 1-3.4.2 |
| RDA Standby State | 5-14.2.2 |
| RDA State Transition Matrix | Table 5-32 |
| RDA States | 5-14.2 |
| Calibration Processing | 5-14.2.5 |
| Change Command | 5-14.2.7 |
| Cold Startup | 5-14.2.17 |
| Local or Either Control | 5-14.2.6 |
| Power Control | 5-14.2.20 |
| Radar Data Output Buffer Overflow | 5-14.2.13 |
| RDA Off-Line Operate State | 5-14.2.3 |
| RDA Operate State | 5-14.2.1 |
| RDA Operating Modes | 5-14.2.15 |
| RDA Playback State | 5-14.2.4 |
| RDA Standby State | 5-14.2.2 |
| RDASC | 5-14.2.14 |
| Redundant Channel Control | 5-14.2.22 |
| Restart | 5-14.2.19 |

Subject — Paragraph Figure, Table Number

RDA States - Cont.
Specific Requirements . . . . . 5-14.2.16
Transition
Between Offline, Standby, Playback and Operate . . . . . 5-14.2.12
Either to Playback Local . . . . . 5-14.2.11
Either to Operate Local Control . . . . . 5-14.2.9
Either to Operate Offline Control . . . . . 5-14.2.10
Local to Either Control . . . . . 5-14.2.8
Transmitter Control . . . . . 5-14.2.21
Warm Startup . . . . . 5-14.2.18

RDA Status . . . . . Table 4-40

RDA Status and Control Interface . . . . . 5-2.6
Analog Status Data Monitoring . . . . . 5-2.6.1
Analog Status Data Monitoring Functional Description . . . . . 5-9.7
Data Acquisition Interface Functional Description . . . . . 5-9.2
DAU/RDASC Status Data Interface . . . . . 5-2.6.3
DAU/RDASC Status Data Interface Functional Description . . . . . 5-9.5
Discrete Status Data Monitoring . . . . . 5-2.6.2
Discrete Status Data Monitoring Functional Description . . . . . 5-9.6
Functional Block Diagram . . . . . Figure FO5-13
Functional Block Diagram Description . . . . . Figure FO5-12
Off-Line Diagnostics . . . . . 5-9.9
On-Line Performance Monitoring . . . . . 5-9.8
RDASC/DAU Command Data Interface . . . . . 5-2.6.4
RDASC/DAU Command Data Interface Functional Description . . . . . 5-9.3
Redundant RDASC Interprocessor Link . . . . . 5-9.4

RDA Status and Control Processor . . . . . 4-1.2.3
Circuit Card Replacement . . . . . 6-5.5
Half-Board Disassembly and Assembly . . . . . 6-5.5.3
Removal and Insertion General Information . . . . . 6-5.5.1
Strapping and Switches . . . . . 6-5.5.2
TODY Battery Replacement Procedure . . . . . 6-5.5.5

RDA System Operability Test Functions - CPCI 06 . . . . . 5-2.9.4

RDA System Operational Test Interface . . . . . 1-3.3.9.6

RDA System Test Check Procedure . . . . . 4-3.6
Table 4-32

RDA Tasks . . . . . 5-1.3

RDA Thermostats . . . . . Figure 6-64

RDA Transition Between Offline, Standby, Playback and Operate . . . . . 5-14.2.12

| Subject | Paragraph Figure, Table Number |
|---|---|
| RDA Transition From Either to Playback Local | 5-14.2.11 |
| RDA Transition | |
| Either to Operate Local Control | 5-14.2.9 |
| Either to Operate Offline Control | 5-14.2.10 |
| Local to Either Control | 5-14.2.8 |
| RDADP | 1-2.2.5.3 |
| | 4-2.3 |
| A/B Switch Controls and Indicators | 4-2.3.17 |
| AC Power Distribution Panel Controls and Indicators | 4-2.3.12 |
| Automatic Wideband Communication Switch Controls and Indicators | 4-2.3.14 |
| CDS Master Module Controls and Indicators | 4-2.3.3 |
| Channel Service Unit Controls and Indicators | 4-2.3.13 |
| Dial Port Modem Controls and Indicators | 4-2.3.16 |
| Front View | Figure 4-2 |
| Maintenance Panel Controls and Indicators | 4-2.3.1 |
| Pedestal Power Amplifier Unit Controls and Indicators | 4-2.3.5 |
| Power Supplies Adjustment | 6-6.21 |
| Adjustment Procedure | 6-6.21.3 |
| Equipment and Tools Required | 6-6.21.1 |
| Initial Conditions/Preliminary Setup | 6-6.21.2 |
| Power Supplies Assemblies Controls and Indicators | 4-2.3.11 |
| RDA Maintenance Terminal Controls and Indicators | 4-2.3.4 |
| Rear View | Figure 4-3 |
| SCSI Assembly Controls and Indicators | 4-2.3.6 |
| STATMUX Controls and Indicators | 4-2.3.15 |
| Swing-Out Power Subsystem Controls and Indicators | 4-2.3.2 |
| VME Chassis Controls and Indicators | 4-2.3.7 |
| VME Wideband Board Controls and Indicators | 4-2.3.8 |
| VMEbus to Concurrent I/O Bus Interface Board Controls and Indicators | 4-2.3.9 |
| | 4-2.3.10 |
| RDADP Cabinet | 1-2.2.5 |
| | Figure 1-9 |
| AC Power Distribution | 5-12.3.2.1 |
| Automatic A/B Wideband Communication Switch | 1-2.2.5.8 |
| Channel Service Unit | 1-2.2.5.7 |
| Data Acquisition | 1-2.2.5.2 |
| DC Power Distribution | 5-12.3.2.2 |
| FAA and NWS Redundant | 1-2.2.5.1 |
| FAA Specific | 1-2.2.5.1.1 |
| Internal Interfaces | 1-2.2.5.4 |
| NWS Specific | 1-2.2.5.1.2 |

Subject — Paragraph Figure, Table Number

RDADP Cabinet - Cont.
RDA Maintenance Terminal . . . 1-2.2.5.5
RDADP . . . 1-2.2.5.3
Signal Processor . . . 1-2.2.5.6
RDADP Cabinet Power Distribution Panel Replacement Procedure . . . 6-5.67
Equipment and Tools Required . . . 6-5.67.1
Initial Conditions/Preliminary Setup . . . 6-5.67.2
Replacement Procedure . . . 6-5.67.3
RDADP Startup, Special Notes . . . 6-5.3.2.1.6
RDASC . . . 5-14.2.14
Application Program Functions - CPCI 01 . . . 5-2.9.3
Component Layout and Strapping Index . . . Figure 6-16
Control Commands . . . Table 5-31
DAU Interface . . . 5-9.2.1
Table 5-17
Error Messages . . . 6-3.5
Functional Representation . . . Figure 5-28
Functions
Control RDA . . . 5-2.9.3.5
Control Signal Processor . . . 5-2.9.3.6
Form RDA Data . . . 5-2.9.3.3
Handle Maintenance Console . . . 5-2.9.3.1
Handle Wideband Data . . . 5-2.9.3.4
Monitor RDA Hardware . . . 5-2.9.3.2
Lead . . . 5-6.8.6
DIAG DIM MODE and DIAG SMI MODE Commands . . . 5-6.8.6.4
Master Clear IOC and PSP Commands . . . 5-6.8.6.6
PSPI/IOC CMD CODE Bus . . . 5-6.8.6.1
TGL CMD BANK REQ Command . . . 5-6.8.6.3
TGL CMD BANKS FROM IOC Command . . . 5-6.8.6.5
WR MODE and RD MODE Commands . . . 5-6.8.6.2
LEDs . . . Table 5-16
Processing . . . 5-2.9
Central Processing Unit . . . 5-2.9.1
Mass Storage and Archiving . . . 5-2.9.2
RDA System Operability Test Functions - CPCI 06 . . . 5-2.9.4
RDASC Application Program Functions - CPCI 01 . . . 5-2.9.3
RDASOT for Redundant Configurations . . . 5-2.9.5
RDASC Circuit Card Replacement Procedure . . . 6-5.5.4
Equipment and Tools Required . . . 6-5.5.4.1
Initial Conditions/Preliminary Setup . . . 6-5.5.4.2
Replacement Procedure . . . 6-5.5.4.3

Subject — Paragraph Figure, Table Number

RDASC Circuit Card Physical Features . . . . . Figure 6-17
RDASC Functional Group . . . . . 6-4.7
Confidence Test Error Messages . . . . . 6-4.7.3
M3200 Error Messages . . . . . 6-4.7.4
RDA 1 . . . . . 6-4.7.1
RDA 2 . . . . . 6-4.7.2
RDASC Processor . . . . . 4-1.2.3
5-5.3.2.3
5-1 1.2.1
Edge-Connected Cables . . . . . Figure 6-18
Functional Description
Central Processing Unit . . . . . 5-7.4
Control/Diagnostic System (CDS) Function . . . . . 5-7.10
Direct Memory Interface Function . . . . . 5-7.6
Main Memory Function . . . . . 5-7.5
Main Storage and Archiving Function . . . . . 5-7.7
Off-Line Fault Isolation . . . . . 5-7.12
On-Line Performance Monitoring . . . . . 5-7.1 1
Peripheral Device Interface Function . . . . . 5-7.8
Processor System Bus Structure . . . . . 5-7.2
PSP/RDASC Interface Function . . . . . 5-7.9
Timing Function . . . . . 5-7.3
Terminator Board . . . . . Figure 6-20
To DAU . . . . . Table 5-17
RDASC Software Program (CPCI 01) . . . . . 1-3.3
RDASC Software Program CPCI 01
Control Pedestal . . . . . 1-3.3.7
Control RDA . . . . . 1-3.3.5
Control Signal Processor . . . . . 1-3.3.6
CPCI 01 Interface Requirements . . . . . 1-3.3.9
Form RDA Data . . . . . 1-3.3.3
Handle Maintenance Console . . . . . 1-3.3.1
Handle RDA Interprocessor Link . . . . . 1-3.3.8
Handle Wideband Data . . . . . 1-3.3.4
Monitor RDA Hardware . . . . . 1-3.3.2
RDASC-PSP Diagnostic Interface . . . . . 5-6.3.5.2
RDASC-PSP Diagnostic Interface and SMI Bus Generator . . . . . 5-6.9.1
RDASC/DAU Command Data Interface . . . . . 5-2.6.4
Functional Description . . . . . 5-9.3
Functional Flow Diagram . . . . . Figure FO5-14

Subject — Paragraph Figure, Table Number


RDASC/Servo Interface . . . . . 5-2.5.4

RDASOT
- Commands . . . . . 4-7.2.2
- Operator Inputs . . . . . 4-7.2.1
- Recording Maintenance Sessions . . . . . 6-5.1.5
- Redundant Configurations . . . . . 5-2.9.5
- RIOS Functionality . . . . . 6-6.33
  - Equipment Required . . . . . 6-6.33.1
  - Example . . . . . 6-6.33.2
- Subtests
  - De-Select All . . . . . 4-7.2.5.2
  - Select All . . . . . 4-7.2.5.1
  - Select Individual . . . . . 4-7.2.5.3
- Termination . . . . . 4-7.2.3
  - Forced . . . . . 4-7.2.3.2
    - KILLSOT Command . . . . . 4-7.2.3.2.2
    - Term Command . . . . . 4-7.2.3.2.1
  - Normal . . . . . 4-7.2.3.1

RDASOT Functions . . . . . 5-2.9.4
- Clutter Bypass Map Generation . . . . . 5-2.9.4.10
- Complex Spectrum Measurement (Confidence Test) . . . . . 5-2.9.4.9
- DAU (Interface) Diagnostics . . . . . 5-2.9.4.4
- HSP Diagnostics . . . . . 5-2.9.4.8
- Pedestal Diagnostics . . . . . 5-2.9.4.5
- PSP Diagnostics . . . . . 5-2.9.4.7
- Receiver Diagnostics . . . . . 5-2.9.4.6
- SOT Control . . . . . 5-2.9.4.1
- Sun Source Checks . . . . . 5-2.9.4.11
- Tower/Utility Diagnostics . . . . . 5-2.9.4.3
- Transmitter Diagnostics . . . . . 5-2.9.4.2

RDASOT Operations
- Calibration Functional Description . . . . . 4-7.4
- Diagnostic Test Functional Description . . . . . 4-7.3
- Maintenance Aids Functional Description . . . . . 4-7.5
- RDASOT Procedures . . . . . 4-7.6

RDASOT Procedures . . . . . 4-7.6
- Calibration Procedures . . . . . 4-7.6.3
- Diagnostic Test Procedure . . . . . 4-7.6.2
- Initialization Procedure . . . . . 4-7.6.1
- Maintenance Aids Procedure . . . . . 4-7.6.4

Subject | Paragraph Figure, Table Number

RDASOT Software Program (CPCI 06) . . . . . 1-3.5
Calibration Tests . . . . . 1-3.5.2
CPCI 06 Interface Requirements . . . . . 1-3.5.4
Diagnostic Tests . . . . . 1-3.5.1
Manual Control and Display . . . . . 1-3.5.3
Read Data Selection Control . . . . . 5-6.8.8
Read Function . . . . . 5-6.8.2
Real and Imaginary Clutter Filter . . . . . 5-6.3.1.1
Real Value Output of Accumulator . . . . . 5-6.9.3.3
Receiver . . . . . 5-2.4
5-4.1.1
Channel . . . . . 5-2.4.2
Controls and Indicators . . . . . Table 4-2
Front End . . . . . 5-2.4.1
Front View . . . . . Figure 4-1
Interference Detection . . . . . 5-2.4.4
Master Signal Generator . . . . . 5-2.4.3
RF Test Signal Generation . . . . . 5-2.4.5
RF Test Signal Processing . . . . . 5-2.4.6
Signal Processing Functions . . . . . 5-4.1.1.1
Signal Processing Overview . . . . . 5-4.2
Receiver/Transmitter Interface . . . . . 5-4.2.1
Test Functions . . . . . 5-4.1.1.2
Receiver Adaptation Data Entry and Display . . . . . 6-6.29
Adaptation Data Retrieval Procedure . . . . . 6-6.29.3
Equipment and Tools Required . . . . . 6-6.29.1
Initial Conditions/Preliminary Setup . . . . . 6-6.29.2
Receiver and HSP Test Data Generation . . . . . 5-5.4.7
AGC and Interference Test Data . . . . . 5-5.4.7.6
AGC Test Data . . . . . 5-5.4.7.1
I, Q, and Log Test Video . . . . . 5-5.4.7.5
Prescaler and A/D Converter Test Selection . . . . . 5-5.4.7.2
Test Bias Data . . . . . 5-5.4.7.4
Test Generator Timing and Control . . . . . 5-5.4.7.3
Receiver and Transmitter Synchronization . . . . . 5-2.7.3
Receiver Cabinet
AC Distribution . . . . . 5-12.3.1.1
Functional Flow Diagram . . . . . Figure FO5-5
Internal View . . . . . Figure 6-74

Subject — Paragraph Figure, Table Number


Receiver Cabinet Blowers Replacement Procedure . . . . . 6-5.37
Equipment and Tools Required . . . . . 6-5.37.1
Initial Conditions/Preliminary Setup . . . . . 6-5.37.2
Replacement Procedure . . . . . 6-5.37.3

Receiver Channel . . . . . 5-2.4.2
5-4.3
Antenna Feed Assembly . . . . . 5-4.3.1
Automatic Gain Control . . . . . 5-4.3.8
Linear Channel Video Detection . . . . . 5-4.3.9
Log Channel Video Detection . . . . . 5-4.3.7
Receiver Waveguide Switch . . . . . 5-4.3.2
RF Amplification . . . . . 5-4.3.4
RF Pre-Filtering . . . . . 5-4.3.5
RF-to-IF Conversion . . . . . 5-4.3.6
Transmit/Receive Function . . . . . 5-4.3.3
Video A/D Conversion . . . . . 5-4.3.10

Receiver Channel Alignment . . . . . 6-6.24
AGC Threshold Voltage Adjustment . . . . . 6-6.24.4
Equipment and Tools Required . . . . . 6-6.24.4.1
Initial Conditions/Preliminary Setup . . . . . 6-6.24.4.2
Procedure . . . . . 6-6.24.4.3
Description . . . . . 6-6.10
AGC Clocks 1 and 2 Alignment . . . . . 6-6.10.4
AGC Controller Threshold Adjustment . . . . . 6-6.10.3
I/Q Phase Detector Gain and DC Offset Adjustment . . . . . 6-6.10.2
IF Amplifier/Limiter Noise Reference Level Adjustment . . . . . 6-6.10.1
Equipment Restoration . . . . . 6-6.24.5
Final IF Amplifier/Limiter Gain Adjustment . . . . . 6-6.24.6
Equipment and Tools Required . . . . . 6-6.24.6.1
Initial Conditions/Preliminary Setup . . . . . 6-6.24.6.2
Procedure . . . . . 6-6.24.6.3
I/Q Phase Detector DC Offset Adjustment . . . . . 6-6.24.3
Equipment and Tools Required . . . . . 6-6.24.3.1
Initial Conditions/Preliminary Setup . . . . . 6-6.24.3.2
Procedure . . . . . 6-6.24.3.3
I/Q Phase Detector Gain Adjustment . . . . . 6-6.24.2
Equipment and Tools Required . . . . . 6-6.24.2.1
Initial Conditions/Preliminary Setup . . . . . 6-6.24.2.2
Procedure . . . . . 6-6.24.2.3
IF Amplifier/Limiter Gain Adjustment
Initial . . . . . 6-6.24.1

Subject | Paragraph Figure, Table Number

Receiver Channel Alignment - Cont.
Initial IF Amplifier/Limiter Gain Adjustment
Alignment Procedure . . . . . 6-6.24.1.3
Equipment and Tools Required . . . . . 6-6.24.1.1
Initial Conditions/Preliminary Setup . . . . . 6-6.24.1.2
Receiver Control Data Generation . . . . . 5-2.7.6
5-5.4.8
RECEIVER CTRL DATA, Receiver Interface . . . . . 5-4.4.1.3
Receiver Diagnostics . . . . . 1-3.5.1.5
4-7.3.5
Receiver Front End . . . . . 5-2.4.1
5-4.2.1.3
Receiver Functional Block Diagram . . . . . Figure FO5-4
Receiver Functional Block Diagram Description
Interference Detection (Optional) . . . . . 5-4.5
Master Signal Generation . . . . . 5-4.4
Off-Line Fault Isolation Diagnostic . . . . . 5-4.10
On-Line Calibration and Performance Checks . . . . . 5-4.9
Receiver Channel . . . . . 5-4.3
Receiver Signal Processing Overview . . . . . 5-4.2
Receiver Test Function Overview . . . . . 5-4.6
RF Test Signal Generation . . . . . 5-4.7
RF Test Signal Processing . . . . . 5-4.8
Receiver Functional Group . . . . . 6-4.4
R1 . . . . . 6-4.4.1
R2 . . . . . 6-4.4.2
R3 . . . . . 6-4.4.3
R4 . . . . . 6-4.4.4
R5 . . . . . 6-4.4.5
R6 . . . . . 6-4.4.6
R7 . . . . . 6-4.4.7
R8 . . . . . 6-4.4.8
R9 . . . . . 6-4.4.9
R10 . . . . . 6-4.4.10
R11 . . . . . 6-4.4.11
R12 . . . . . 6-4.4.12
Receiver Interface . . . . . 5-4.4.1
RCVR CLKs . . . . . 5-4.4.1.1
RECEIVER CTRL DATA . . . . . 5-4.4.1.3
RF GATE . . . . . 5-4.4.1.2

Subject — Paragraph Figure, Table Number


Receiver Interface Replacement Procedure . . . . . 6–5.33
Equipment and Tools Required . . . . . 6–5.33.1
Initial Conditions/Preliminary Setup . . . . . 6–5.33.2
Replacement Procedure . . . . . 6–5.33.3

Receiver Power Supplies Adjustment . . . . . 6–6.20
Description . . . . . 6–6.6
Equipment and Tools Required . . . . . 6–6.20.1
Initial Conditions/Preliminary Setup . . . . . 6–6.20.2
Procedure . . . . . 6–6.20.3

Receiver Protect Command . . . . . 5–5.4.6.4.2

Receiver Protector Replacement Procedure . . . . . 6–5.52.13
Equipment and Tools Required . . . . . 6–5.52.13.1
Initial Conditions/Preliminary Setup . . . . . 6–5.52.13.2
Replacement Procedure . . . . . 6–5.52.13.3

Receiver Signal Processing Overview
Interference Detection . . . . . 5–4.2.3
Master Signal Generation . . . . . 5–4.2.2

Receiver Status Data Collection . . . . . 5–2.7.8
5–5.4.10

Receiver Status Data Interface Function . . . . . 5–4.8.4

Receiver Test Data Generation . . . . . 5–2.7.7

Receiver Test Function . . . . . Table 5–3
Off–Line . . . . . 5–4.6.2
On–Line . . . . . 5–4.6.1
Overview . . . . . 5–4.6
RF Test Signal Generation . . . . . 5–4.6.3
RF Test Signal Processing . . . . . 5–4.6.4

Receiver Waveguide Switch . . . . . 5–4.2.1.2
5–4.3.2
5–14.2.22.3

Receiver, Transmitter and HSP Synchronization . . . . . 5–5.4.6
Batch Waveforms . . . . . 5–5.4.6.2
Contiguous Waveforms . . . . . 5–5.4.6.1
Staggered Pair . . . . . 5–5.4.6.3
Synchronizer Functional Description . . . . . 5–5.4.6.4

Receiver/Signal Processor Calibration . . . . . 6–6.28
Off–Line Calibration Checks . . . . . 6–6.28.2
Correction of System Noise Temperature . . . . . 6–6.28.2.3
CW Substitution Reflectivity Accuracy Verification . . . . . 6–6.28.2.5

Subject | Paragraph Figure, Table Number

Receiver/Signal Processor Calibration – Cont.
Off–Line Calibration Checks – Cont.
Minimum Discernible Signal . . . . . 6–6.28.2.2
Reflectivity Error Check . . . . . 6–6.28.2.1
Off–line Calibration Procedures . . . . . 6–6.28.3
Calibration of Internal Noise Source . . . . . 6–6.28.3.3
CW Test Path Calibration . . . . . 6–6.28.3.1
Delayed Klystron Path . . . . . 6–6.28.3.5
MISC CAL LOSS KLYSTRON OUT TARGET Calibration . . . . . 6–6.28.3.5.3
RF Drive Path Calibration . . . . . 6–6.28.3.2
RF Test Attenuator Calibration . . . . . 6–6.28.3.4
Sampling Phase Calibration . . . . . 6–6.28.3.5.2
Solar Calibration . . . . . 6–6.28.3.6
Performance Data . . . . . 6–6.28.1
Data Recording . . . . . 6–6.28.1.6
Power Monitor Consistency Check . . . . . 6–6.28.1.3
Reflectivity Calibration . . . . . 6–6.28.1.1
Reflectivity Calibration Check . . . . . 6–6.28.1.2
Reflectivity Error Estimate . . . . . 6–6.28.1.4
Suncheck Measurements . . . . . 6–6.28.1.5

Receiver/Signal Processor Calibration Description . . . . . 6–6.13
CW Test Signal Injection Calibration . . . . . 6–6.13.1
RF Power Sensor Calibration and High Power Pulse Width Measurement . . . . . 6–6.13.3
System Noise Calibration . . . . . 6–6.13.2

Receiver/Transmitter Interface . . . . . 5–4.2.1
A/D Converter . . . . . 5–4.2.1.9
Automatic Gain Control . . . . . 5–4.2.1.6
Linear Channel Video Detection . . . . . 5–4.2.1.8
Log Channel Video Detection . . . . . 5–4.2.1.7
Receiver Front End . . . . . 5–4.2.1.3
Receiver Waveguide Switch . . . . . 5–4.2.1.2
RF Pre–Filtering . . . . . 5–4.2.1.4
RF–to–IF Conversion . . . . . 5–4.2.1.5
T/R Circulator . . . . . 5–4.2.1.1

Reception and Selection Circuitry . . . . . 5–9.5.1
TX HV OFF . . . . . 5–9.5.1.3
TX INOP . . . . . 5–9.5.1.2
TX RECYCLE . . . . . 5–9.5.1.1

Redundant Analog Status Data Monitoring
Functional Flow Diagram . . . . . Figure FO5–21

Subject — Paragraph Figure, Table Number


Redundant Channels
- FAA
  - Switching Locally
    - MSCF . . . . . Table 4-48
  - Switching Remotely
    - MSCF . . . . . Table 4-46
- NWS
  - Switching Locally
    - MSCF . . . . . Table 4-52
  - Switching Remotely
    - MSCF . . . . . Table 4-50

Redundant Channel Control . . . . . 5-14.2.22
- Command Other Channel to Standby Command . . . . . 5-14.2.22.2
- Controlling Channel . . . . . 5-14.2.22.5
- Interprocessor Status Data . . . . . 5-14.2.22.4
- Receiver Waveguide Switch . . . . . 5-14.2.22.3
- Status Request Command . . . . . 5-14.2.22.1

Redundant Configuration Interprocessor Link . . . . . Figure FO5-31

Redundant Discrete Status Data Monitoring, Functional Flow Diagram . . . . . Figure FO5-19

Redundant RDA Data Processor, ICD
- FAA . . . . . Figure FO7-12
- NWS . . . . . Figure FO7-11

Redundant RDASC Interprocessor Link . . . . . 5-9.4

Redundant RDASC/DAU Command Data Interface, Functional Description . . . . . Figure FO5-15

Redundant Switching . . . . . 5-13
Figure FO5-32
- AC Power, Switching . . . . . 5-13.5
- Antenna Control . . . . . 5-13.2
- Pedestal Control . . . . . 5-13.4
- Pedestal Voltage . . . . . 5-13.6
- Waveguide Interlock Switch . . . . . 5-13.3
- Wideband Communications Switching, NWS . . . . . 5-13.7

Redundant Systems, Switching . . . . . 6-5.3.2.1.1
- FAA . . . . . 6-5.3.2.1.1.1
- NWS . . . . . 6-5.3.2.1.1.2

| Subject | Paragraph Figure, Table Number |
|---|---|
| Reference Data | |
| Consumables/Expendables | 1-4.7 |
| Equipment Supplied | 1-4.3 |
| Glossary of Terms | 1-4.2 |
| RDA Group Reference Publications | 1-4.1 |
| Special Purpose Tools and Fixtures | 1-4.6 |
| Standard Test Equipment | 1-4.5 |
| Standard Tools | 1-4.4 |
| Reference Designation | 1-2.2.5.1.2 |
| UD1 - Equipment Shelter | 1-2.2.1 |
| | 1-2.2.2.4 |
| | 4-2.1.5 |
| | 6-5.53.1 |
| | Figure 1-3 |
| | Figure 1-4 |
| | Figure 1-5 |
| | Table 1-1 |
| UD1AT2 - Dummy Load, Electrical Waveguide, Medium Power | 5-3.6.2 |
| | 5-10.2.1 |
| | 5-10.4.4 |
| UD1AT3 - Dummy Load, Electrical Waveguide, High Power | 5-3.6.5 |
| | 5-3.6.7 |
| UD1AT4 - 3 dB Pad | Table 6-12 |
| UD1AT102 - Dummy Load, Electrical Waveguide, Medium Power | 5-3.6.2 |
| UD1AT103 - Dummy Load, Electrical Waveguide, High Power | 5-3.6.7 |
| UD1CR1 - Crystal Detector | 5-3.6.4 |
| UD1CR2 - Crystal Detector | 5-3.6.4 |
| UD1CR101 - Crystal Detector | 5-3.6.4 |
| UD1CR102 - Crystal Detector | 5-3.6.4 |
| UD1DC1 - Directional Coupler | 5-4.7.4.3 |
| | 5-10.2.1 |
| | 6-5.53.5.3 |
| | 6-5.70 |
| | 6-5.71.3 |
| | Table 6-12 |
| UD1DC101 - Directional Coupler | 6-5.53.5.3 |
| | 6-5.71.3 |
| UD1FL1 - Bandpass Filter | 5-12.3.2.1 |
| UD1FL2 - Bandpass Filter | 5-12.3.2.1 |
| | 5-12.4 |
| UD1FL3 - Bandpass Filter | 5-12.3.2.1 |
| UD1FL101 - Bandpass Filter | 5-12.3.2.1 |
| UD1FL103 - Bandpass Filter | 5-12.3.2.1 |

| Subject | Paragraph Figure, Table Number |
|---|---|
| Reference Designation - Cont. | |
| UD1S1 - Waveguide Switch | 5-3.6.2 |
| | 5-3.6.5 |
| | 5-3.6.6 |
| | 5-3.6.7 |
| | 5-9.3.1 |
| | 5-9.3.3.4 |
| | 5-10.2.2 |
| | 5-10.2.3 |
| | 5-10.3 |
| | 5-10.4.1 |
| | 5-10.4.2 |
| | 5-13.2 |
| | 5-13.3 |
| | 6-5.53.5 |
| | 6-5.53.5.3 |
| | Table 6-12 |
| UD1S2 - Waveguide Switch | 5-3.6.7 |
| | 5-3.6.8 |
| | 5-9.3.3.4 |
| | 5-10.2.2 |
| | 5-10.2.3 |
| | 5-10.3 |
| | 5-13.2 |
| | 5-13.3 |
| | 6-5.53.5 |
| | Table 6-12 |
| UD1S101 - Waveguide Switch | 5-3.6.2 |
| | 5-3.6.7 |
| | 5-9.3.3.4 |
| | 5-10.2.2 |
| | 5-10.4.1 |
| | 5-10.4.2 |
| | 5-13.2 |
| | 5-13.3 |
| | 6-5.53.5 |
| | 6-5.53.5.3 |
| | Table 6-12 |
| UD1S102 - Radome Hatch Switch | 5-13.2 |
| UD1WG2 - Harmonic Filter | 5-3.6.1 |
| | 5-10.2 |
| UD1WG4 - Circulator | 5-3.6.2 |
| | 5-10.2.1 |
| | 6-5.71.3 |

Subject — Paragraph Figure, Table Number

Reference Designation - Cont.
UD1WG6 - Spectrum Filter . . . . . 5-3.6.3
5-10.2.1
6-5.71
6-5.71.3
Table 6-12
UD1WG18 - Spectrum Filter . . . . . 6-5.71.3
UD1WG102 - Harmonic Filter . . . . . 5-3.6.1
UD1WG104 - Circulator . . . . . 5-3.6.2
6-5.71.3
UD1WG106 - Spectrum Filter . . . . . 5-3.6.3
6-5.71
6-5.71.3
UD2 - Antenna/Pedestal . . . . . 1-1.4
1-2.2.2
1-2.2.10
4-2.1.5
5-2.4
5-4.7.6
6-5.52
Figure 1-6
Table 1-1
Table 1-3
Table 6-1
Table 6-22
UD2A1 - Pedestal Assembly . . . . . 5-1 1.2
5-1 1.6
Figure 1-6
Figure 6-63
UD2A1A1 - Elevation Assembly . . . . . Figure 1-6
UD2A1A1A1 - Elevation Manual Drive Assembly . . . . . 6-5.52.1
Table 6-12
UD2A1A1A1S1 - Elevation Manual Drive Stow Pin Switch . . . . . 6-5.52.2
Table 6-12
UD2A1A1A2 - Elevation Data Package . . . . . 6-5.52.3
Table 6-12
UD2A1A1A2A1 - Elevation Encoder . . . . . 6-5.52.3
6-6.17
Table 6-12
UD2A1A1A3 - Elevation Gearbox . . . . . 6-5.52.4
Table 6-12
UD2A1A1A8S1 - Elevation Stow Pin Switch . . . . . 6-5.52.6
Table 6-12

Subject — Paragraph Figure, Table Number

Reference Designation - Cont.
UD2A1A1A9S1 - Elevation Stow Pin Switch . . . . . 6-5.52.6
Table 6-12
UD2A1A1B1 - Elevation Gearbox Drive Motor . . . . . 6-5.52.5
Table 6-12
UD2A1A1S3 - Elevation Stow Pin Switch . . . . . 6-5.52.6
Table 6-12
UD2A1A1S4 - Elevation Stow Pin Switch . . . . . 6-5.52.6
Table 6-12
UD2A1A1S5 - Elevation Lower Pre-limit Switch . . . . . 6-6.18
UD2A1A1S6 - Elevation Final Limit Switch . . . . . 6-6.18
UD2A1A1S7 - Elevation Upper Pre-limit Switch . . . . . 6-6.18
UD2A1A1S8 - Elevation Final Limit Switch . . . . . 6-6.18
UD2A1A2 - Slip Ring Assembly . . . . . 5-11.5.2
5-11.5.3
6-5.52.17
Figure 1-6
Table 6-12
UD2A1A2A1 - Pedestal Slip Ring Brush Block Assembly . . . . . 6-5.69
Table 6-12
UD2A1A2A2 - Pedestal Slip Ring Brush Block Assembly . . . . . 6-5.69
Table 6-12
UD2A1A2A3 - Pedestal Slip Ring Brush Block Assembly . . . . . 6-5.69
Table 6-12
UD2A1A3 - Azimuth Assembly . . . . . 5-11.5.2
Figure 1-6
UD2A1A3A1 - Azimuth Manual Drive Assembly . . . . . 6-5.52.7
6-6.15.3
Table 6-12
UD2A1A3A1S1 - Azimuth Manual Drive Stow Pin Switch . . . . . 6-5.52.8
Table 6-12
UD2A1A3A2 - Azimuth Data Package . . . . . 6-5.52.9
Table 6-12
UD2A1A3A2A1 - Azimuth Encoder . . . . . 6-5.52.9
6-6.17
Table 6-12
UD2A1A3A3 - Azimuth Gearbox . . . . . 6-5.52.10
Table 6-12
UD2A1A3A8S1 - Azimuth Stow Pin Switch . . . . . 6-5.52.12
UD2A1A3B1 - Azimuth Gearbox Drive Motor . . . . . 5-11.7.7
6-5.52.11
Figure 6-40
Table 6-12

| Subject | Paragraph Figure, Table Number |
|---|---|
| Reference Designation - Cont. | |
| UD2A1A3FL1 - Bandpass Filter | 1-2.2.2.4 |
| | 5-4.3.3 |
| | 5-4.3.3.1 |
| | 6-5.52.13.3 |
| | 6-5.52.14.3 |
| | Figure 6-42 |
| | Table 6-12 |
| UD2A1A3FL2 - Bandpass Filter | 1-2.2.2.4 |
| | 5-4.3.3 |
| | 5-4.3.3.1 |
| | 6-5.52.13.3 |
| | 6-5.52.14.3 |
| | Table 6-12 |
| UD2A1A3RT2 - Main Bearing Oil Sensor | 6-5.52.15 |
| | Table 6-12 |
| UD2A1A3S2 - Azimuth Stow Pin Switch | 6-5.52.12 |
| | Table 6-12 |
| UD2A1A4 - Azimuth Rotary Joint | 1-1.3 |
| | 6-5.52.16 |
| | Table 1-7 |
| | Table 6-12 |
| UD2A1A5 - Elevation Rotary Joint | 1-1.3 |
| | Table 1-8 |
| | Table 6-12 |
| UD2A1AT3 - Low-Power Terminator | 5-4.2.1.2 |
| | 5-4.3.2 |
| UD2A1DC1 - Crossguide Coupler | 5-3.6.8 |
| UD2A1S1 - Receiver Waveguide Switch | 5-4.2.1.2 |
| | 5-4.3.2 |
| | Figure 6-42 |
| | Table 6-12 |
| UD2A1WG3 - Circulator/RCVR Protector Waveguide | 6-5.52.18.3 |
| | Figure 6-42 |
| UD2A1WG4 - Circulator/Tower Waveguide | 6-5.52.18.3 |
| | Figure 6-42 |
| UD2A1WG05 - Circulator | 5-10.3 |
| | 6-5.52.18 |
| | 6-5.52.18.3 |
| | Figure 6-42 |
| | Table 6-12 |
| UD2A1WG5 - Circulator | 6-5.52.16.3 |
| UD2A1WG6 - Waveguide Switch | Figure 6-42 |
| UD2A1WGXX - Waveguide | Table 6-12 |

Subject — Paragraph Figure, Table Number

Reference Designation - Cont.
UD2A2 - Feed Assembly . . . . . Figure 1-6
UD2A2A1 - Feedhorn . . . . . Table 6-12
UD2A2A1WG1 - Waveguide (EL to Feedhorn) . . . . . Table 6-12
UD2A2WG4 - Waveguide (AZ to Feedhorn) . . . . . Table 6-12
UD2A3 - Receiver Protector . . . . . 1-2.2.2.4
5-4.3.3
5-4.7
5-4.7.6
5-12.3.1.1
5-12.3.1.2.8
6-5.52.13
6-5.52.18.3
6-5.52.19.3
6-5.53.4.3
6-5.54.3
Figure 6-42
Figure 6-62
Table 6-12
Table 6-25
Table 6-38
UD2A3A1 - Passive Diode Limiter . . . . . 6-5.52.13.3
6-5.52.19
6-5.52.19.3
Figure 6-42
Table 6-12
UD2A3A2 - Receiver Protector . . . . . 6-5.52.13
6-5.52.13.3
UD2A4 - Low Noise Amplifier . . . . . 1-2.2.2.4
5-4.3.4
5-12.3.1.2.1
6-5.52.13.3
6-5.52.14
Figure 6-42
Table 6-12
Table 6-25
Table 6-38
UD2A5 - Power Monitor . . . . . 5-10.3
6-5.52.22
Table 6-12
Table 6-25
Table 6-38
UD2A6 - Waveguide Coupler . . . . . Table 6-12

| Subject | Paragraph Figure, Table Number |
|---|---|
| Reference Designation - Cont. | |
| UD2A7 - Receiver Protector | 1-2.2.2.4 |
| | 5-4.3.3 |
| | 5-4.7 |
| | 5-4.7.6 |
| | 5-12.3.1.1 |
| | 6-5.52.13 |
| | 6-5.52.19.3 |
| | Figure 6-42 |
| | Table 6-12 |
| | Table 6-25 |
| | Table 6-38 |
| UD2A7A1 - Passive Diode Limiter | 6-5.52.13.3 |
| | 6-5.52.19 |
| | 6-5.52.19.3 |
| | Figure 6-42 |
| | Table 6-12 |
| UD2A7A2 - Receiver Protector | 6-5.52.13 |
| | 6-5.52.13.3 |
| UD2A8 - Low Noise Amplifier | 1-2.2.2.4 |
| | 5-4.3.4 |
| | 6-5.52.13.3 |
| | 6-5.52.14 |
| | Figure 6-42 |
| | Table 6-12 |
| | Table 6-25 |
| | Table 6-38 |
| UD2A9 - Power Monitor | 5-10.3 |
| | 6-5.52.22 |
| | Table 6-12 |
| | Table 6-25 |
| | Table 6-38 |
| UD2A10 - Air Temperature Sensor, Interior | Figure 1-6 |
| UD2A11 - Temperature Transmitter | Figure 1-6 |
| UD2A12 - Air Temperature Sensor, Interior | Figure 1-6 |
| UD2A13 - Temperature Transmitter | Figure 1-6 |
| UD2A14 - Intercom | Figure 1-6 |
| UD2AT1 - 6 dB Pad | Table 6-12 |
| UD2HR1 - Radome Heater | Figure 1-6 |
| UD2HR2 - Radome Heater | Figure 1-6 |
| UD2HR3 - Radome Heater | Figure 1-6 |
| UD2S1 - Thermostat | Figure 1-6 |
| UD2S2 - Thermostat, Radome Vent Fan | Figure 1-6 |

Subject | Paragraph Figure, Table Number

Reference Designation - Cont.
UD2WGXX - Elevation Waveguide . . . . . Table 6-12
UD3 - Transmitter . . . . . 1-1.1
1-1.4
1-2.2.1
1-2.2.3
4-2.1.5
5-9.3.3.4
5-12.4
6-6.5
6-6.19
Figure 1-3
Figure 1-4
Figure 1-5
Figure 1-7
Table 1-1
Table 1-2
Table 1-3
Table 6-1
UD3A1 - Transmitter Control Panel . . . . . 5-3.3.12
5-3.5
5-3.5.5
5-3.9.1
6-6.15.3
6-6.16.3
Figure 1-7
UD3A2 - 280V Power Supply . . . . . 5-3.4.1
Figure 1-7
UD3A3 - Card Rack Assembly . . . . . Figure 1-7
UD3A3A1 - Transmitter Control Logic . . . . . 5-3.5
5-3.5.2
UD3A3A2 - Transmitter Control Interface . . . . . 5-3.5
5-3.5.3
UD3A3A3 - Transmitter RMS Interface . . . . . 5-3.5
5-3.5.4
UD3A3A4 - Transmitter Control Adapter . . . . . 5-3.5
5-3.5.1
UD3A4 - RF Driver . . . . . 5-3.3.1
Figure 1-7
UD3A5 - RF Pulse Shaper . . . . . 5-3.3.1
5-3.3.2
5-4.7.4.4
Figure 1-7

Subject — Paragraph Figure, Table Number

Reference Designation - Cont.
UD3A6 - Arc Detector . . . . . 5-3.3.11
Figure 1-7
UD3A7 - Oil Tank Assembly . . . . . Figure 1-7
UD3A7A1A1 - Oil Tank Component Board . . . . . 5-3.3
5-3.3.12
UD3A7A1T4 - Power Transformer . . . . . 5-3.3
5-3.3.5
UD3A7T1 - Pulse Transformer . . . . . 5-3.3
5-3.3.6
5-3.4.4
UD3A7T2 - Charging Transformer . . . . . 5-3.4.3
UD3A7T3 - Filament Transformer . . . . . 5-3.3
5-3.3.7
UD3A8 - Post Charge Regulator . . . . . 5-3.4.5
Figure 1-7
UD3A9 - Filter Capacitor Bank . . . . . 5-3.4.1
Figure 1-7
UD3A10 - Charging Switch . . . . . 5-3.4.1
5-3.4.2
Figure 1-7
UD3A11 - Trigger Amplifier . . . . . 5-3.4.1
5-3.4.6
Figure 1-7
UD3A12 - Modulator Pulse Assembly . . . . . 5-3.4.4
Figure 1-7
UD3A12A5 - Diode Assembly . . . . . 5-3.4.4
UD3A13 - Power Distribution Panel . . . . . 5-3.7.1
Figure 1-7
Table 6-22
UD3A13CB1 - Circuit Breaker . . . . . 5-3.7.1
UD3A13CB2 - Circuit Breaker . . . . . 5-3.7.1
UD3A13CB3 - Circuit Breaker . . . . . 5-3.7.1
UD3AT1 - Variable Attenuator . . . . . 5-3.3.3
UD3B1 - Blower . . . . . Figure 1-7
UD3B2 - Blower . . . . . Figure 1-7
UD3B3 - Blower . . . . . 5-3.7.1
Figure 1-7
UD3B4 - Fan . . . . . Figure 1-7
UD3DC1 - Directional Coupler . . . . . 5-10.2
Figure 1-7
UD3FL1 - Filter . . . . . 5-3.7.1
Figure 1-7

Subject — Paragraph Figure, Table Number

Reference Designation - Cont.
UD3FL2 - Filter . . . . . 5-3.7.1
Figure 1-7
UD3FL3 - Filter . . . . . 5-3.7.1
Figure 1-7
UD3FL4 - Filter . . . . . 5-3.7.1
Figure 1-7
UD3FL5 - Filter . . . . . 5-3.7.1
Figure 1-7
UD3FL6 - Filter . . . . . 5-3.7.1
Figure 1-7
UD3FL7 - Filter . . . . . Figure 1-7
UD3FL8 - Filter . . . . . Figure 1-7
UD3FL9 - Filter . . . . . Figure 1-7
UD3FL10 - Filter . . . . . Figure 1-7
UD3FL11 - Filter . . . . . Figure 1-7
UD3FL12 - Filter . . . . . Figure 1-7
UD3FL13 - Filter . . . . . Figure 1-7
UD3HP1 - Heat Exchanger . . . . . 5-3.7.1
Figure 1-7
UD3L1 - Coil . . . . . Figure 1-7
UD3N3 - Fuse Box Assembly . . . . . 5-3.7.2
UD3PS1 - Filament Power Supply . . . . . 5-3.3.4
Figure 1-7
UD3PS2 - Focus Coil Power Supply . . . . . 5-3.3.9
Figure 1-7
UD3PS3 - +28V Power Supply . . . . . Figure 1-7
UD3PS4 - +15V Power Supply . . . . . Figure 1-7
UD3PS5 - -15V Power Supply . . . . . Figure 1-7
UD3PS6 - +5V Power Supply . . . . . Figure 1-7
UD3PS7 - +45V Power Supply . . . . . Figure 1-7
UD3PS8 - Vacuum Pump Power Supply . . . . . 5-3.3.8
Figure 1-7
UD3S2 - Switch . . . . . Figure 1-7
UD3S3 - Switch . . . . . Figure 1-7
UD3S4 - Switch . . . . . Figure 1-7
UD3S5 - Switch . . . . . Figure 1-7
UD3S8 - Focus Coil Air Flow Switch . . . . . Figure 1-7
UD3S9 - Thermostatic Switch . . . . . Figure 1-7
UD3S10 - Klystron Air Flow Switch . . . . . Figure 1-7
UD3S13 - Cabinet Overtemperature Thermostatic Switch . . . . . Figure 1-7
UD3TB2 - Terminal Board . . . . . 5-3.7.1
UD3T1 - Transformer . . . . . Figure 1-7

Subject — Paragraph Figure, Table Number

Reference Designation - Cont.
UD3V1 - Klystron Tube . . . . . 5-3.3.2
5-3.3.10
Figure 1-7
UD4 - Receiver . . . . . 1-1.1
1-1.4
1-2.2.1
1-2.2.4
4-2.1.5
4-2.2
5-2.4
5-4.7.6
5-9.7
5-12.3.1
5-12.3.1.1
5-12.4
6-5.55.2
6-6.20
6-6.23
6-6.24
6-6.24.1.3
6-6.24.2.3
6-6.24.5
6-6.26
Figure 1-3
Figure 1-8
Figure 4-1
Figure 6-70
Figure 6-74
Table 1-1
Table 1-2
Table 1-3
Table 4-2
Table 6-1

Subject — Paragraph Figure, Table Number

Reference Designation - Cont.
UD4A1 - Frequency Generator . . . . . 5-4.3.6.1
5-4.3.9.2
5-4.4
5-4.7.4.1
5-12.3.1.2.1
5-12.3.1.2.3
5-12.3.1.2.4
5-12.3.1.2.5
6-5.38.3
6-6.23
6-6.23.2
6-6.23.3
Figure 1-8
Table 6-12
UD4A1A1 - Frequency Oscillator . . . . . 5-4.4
6-5.38
6-5.38.3
Table 6-12
UD4A4 - Preselect Bandpass Filter . . . . . 5-4.3.5
5-4.7
5-12.3.1.2.4
6-5.40.3
6-6.23.3
Table 6-12
UD4A5 - Mixer-Preamplifier Assembly . . . . . 5-4.3.6.1
5-12.3.1.2.1
6-6.23.3
6-6.24.2.3
Table 6-12
UD4A6 - Matched Bandpass Filter Assembly . . . . . 5-4.3.6.2
5-4.3.7
5-4.3.8.1
5-4.5.2
5-4.5.4
Table 6-12
UD4A7 - Coaxial Delay Line . . . . . 5-4.3.6.2
5-4.3.8
5-4.3.8.1
6-6.31.2.2
Table 6-12

| Subject | Paragraph Figure, Table Number |
|---|---|
| Reference Designation - Cont. | |
| UD4A8 - IF Attenuator | 5-4.3.8 |
| | 5-4.3.8.1 |
| | 5-4.3.8.3 |
| | 5-4.3.9.1 |
| | 5-12.3.1.2.1 |
| | 5-12.3.1.2.4 |
| | 5-12.3.1.2.5 |
| | 6-6.24.1.3 |
| | 6-6.31.3.2 |
| | Table 6-12 |
| UD4A9 - IF Amplifier-Limiter | 5-4.3.8.3 |
| | 5-4.3.9 |
| | 5-4.3.9.1 |
| | 5-4.3.9.2 |
| | 5-12.3.1.2.1 |
| | 6-6.24 |
| | 6-6.24.1.3 |
| | 6-6.24.2.3 |
| | Figure 6-76 |
| | Table 6-12 |
| UD4A10 - I/Q Phase Detector | 5-4.3.8.2 |
| | 5-4.3.9 |
| | 5-4.3.9.1 |
| | 5-4.3.9.2 |
| | 5-4.3.10 |
| | 5-4.4.2.2 |
| | 5-12.3.1.2.1 |
| | 6-6.23.3 |
| | 6-6.24 |
| | 6-6.24.2.3 |
| | 6-6.24.3.3 |
| | Figure 6-77 |
| | Table 6-12 |
| UD4A11 - A/D Converter | 5-4.3.7 |
| | 5-4.3.7.2 |
| | 5-4.3.8.2.1 |
| | 5-4.3.9.2 |
| | 5-4.3.10 |
| | 5-4.3.10.3 |
| | 6-6.24.7 |
| | Figure 1-8 |
| | Table 6-12 |

| Subject | Paragraph Figure, Table Number |
|---|---|
| Reference Designation - Cont. | |
| UD4A12 - Multiple Output Log Amplifier-Detector | 5-4.3.7 |
| | 5-4.3.7.2 |
| | 5-4.3.10 |
| | 5-4.5.3 |
| | 5-4.5.4 |
| | 5-4.8.3.1 |
| | 5-12.3.1.2.1 |
| | Table 6-12 |
| UD4A13 - AGC Controller | 5-4.3.7 |
| | 5-4.3.7.2 |
| | 5-4.3.8 |
| | 5-4.3.8.1 |
| | 5-4.3.8.2 |
| | 5-4.3.8.3 |
| | 5-5.4.7.1 |
| | 5-12.3.1.2.1 |
| | 5-12.3.1.2.3 |
| | 5-12.3.1.2.4 |
| | 5-12.3.1.2.6 |
| | 5-12.3.1.2.7 |
| | 6-6.24 |
| | 6-6.24.1.3 |
| | 6-6.24.2.3 |
| | 6-6.24.4.3 |
| | 6-6.24.7 |
| | Table 6-12 |
| UD4A14 - Guard Band Amplifier | 5-4.3.6.1 |
| | 5-4.5 |
| | 5-4.5.1 |
| | 5-12.3.1.2.1 |
| | 6-6.25 |
| | Figure 6-80 |
| | Table 6-12 |
| UD4A15 - Guard Band Filter | 5-4.5 |
| | 5-4.5.1 |
| | Table 6-12 |
| UD4A16 - Guard Band Filter | 5-4.5 |
| | 5-4.5.1 |
| | Table 6-12 |

Subject — Paragraph Figure, Table Number

Reference Designation - Cont.
UD4A17 - Log Amp Detectors . . . . . 5-4.5
5-4.5.2
5-4.5.4
5-12.3.1.2.1
Table 6-12
UD4A18 - Log Amp Detectors . . . . . 5-4.5
5-4.5.2
5-4.5.4
5-12.3.1.2.1
Table 6-12
UD4A19 - Interference Detection Processor . . . . . 5-4.3.7.2
5-4.5
5-4.5.3
5-4.5.4
5-12.3.1.2.1
5-12.3.1.2.4
6-6.25
Table 6-12
UD4A20 - 4-Way Power Divider . . . . . 5-4.7.2
Table 6-12
UD4A20 - 4-Way Power Splitter . . . . . 6-5.34.3
6-5.35.3
UD4A21 - Microwave Delay Line . . . . . 5-4.7.2
5-4.7.4.3
Table 6-12
UD4A22 - RF Switch, 4-Position . . . . . 5-4.4.2.5
5-4.7.1
5-4.7.2
5-4.7.3
5-4.7.4
5-4.7.4.5
5-10.2.2
5-12.3.1.2.1
5-12.3.1.2.3
5-12.3.1.2.8
Table 6-12

| Subject | Paragraph Figure, Table Number |
|---|---|
| Reference Designation - Cont. | |
| UD4A23 - RF Digital Attenuator | 5-4.7.1 |
| | 5-4.7.4 |
| | 5-4.7.4.6 |
| | 5-4.7.5 |
| | 5-12.3.1.2.3 |
| | 5-12.3.1.2.4 |
| | 5-12.3.1.2.5 |
| | 6-5.24 |
| | 6-5.24.3 |
| | Table 6-12 |
| | Table 6-23 |
| UD4A24 - RF Switch, 2-Position | 5-4.7.1 |
| | 5-4.7.4 |
| | 5-4.7.6 |
| | 5-12.3.1.2.1 |
| | 5-12.3.1.2.3 |
| | 5-12.3.1.2.8 |
| | 6-5.25 |
| | 6-5.25.3 |
| | Table 6-12 |
| UD4A25 - RF Noise Source | 5-4.7.1 |
| | 5-4.7.3 |
| | 5-4.7.4.2 |
| | 5-12.3.1.2.1 |
| | 5-12.3.1.2.8 |
| | 6-5.26 |
| | 6-5.26.3 |
| | Table 6-12 |
| | Table 6-23 |
| UD4A26 - Transmitter Power Monitor | 5-4.7.2 |
| | 6-5.27 |
| | 6-5.27.3 |
| | Table 6-12 |
| UD4A27 - Multi-Position RF Switch | 5-4.8.1 |
| | 5-12.3.1.2.1 |
| | 5-12.3.1.2.8 |
| | 6-5.28 |
| | 6-5.28.3 |
| | Table 6-12 |

Subject — Paragraph Figure, Table Number

Reference Designation - Cont.
UD4A28 - Multi-Position IF Switch . . . . . 5-4.8.1
5-12.3.1.2.1
5-12.3.1.2.8
6-5.29
Table 6-12
UD4A29 - RF Log Amplifier-Detector . . . . . 5-4.8.2
5-4.8.2.1
5-12.3.1.2.1
6-5.30
6-5.30.3
Table 6-12
UD4A30 - IF Log Amplifier-Detector . . . . . 5-4.8.2
5-4.8.2.2
5-12.3.1.2.1
6-5.31
6-5.31.3
Table 6-12
UD4A31 - RF/IF Test Monitor . . . . . 5-4.8.2
5-4.8.2.1
5-4.8.2.3
5-4.8.3
5-4.8.3.1
5-12.3.1.2.1
5-12.3.1.2.3
5-12.3.1.2.4
6-5.32
6-5.32.3
6-6.26
6-6.26.2
6-6.26.3
6-6.33
Figure 6-81
Table 6-12
UD4A32 - Receiver Interface . . . . . 5-4.3.3
5-4.4
5-4.4.1
5-4.4.1.2
5-4.7.1
5-4.7.4.6
5-4.8.1
5-4.8.3
5-4.8.4

Subject — Paragraph Figure, Table Number

Reference Designation - Cont.
UD4A32 - Receiver Interface - Cont. . . . . 5-12.3.1.2.4
5-12.3.1.2.8
6-5.33
6-5.33.3
Table 6-12
UD4A33 - Attenuator Pad, 6 DB . . . . . 6-5.34
Table 6-12
UD4A34 - Attenuator Pad, 10 DB . . . . . 6-5.35
Table 6-12
UD4A36 - Attenuator . . . . . 5-4.3.5
6-5.36
Figure 1-8
Table 6-12
UD4B1 - Fan . . . . . 5-12.3.1.1
6-5.37
Figure 1-8
Table 6-12
UD4B2 - Fan . . . . . 5-12.3.1.1
6-5.37
Figure 1-8
Table 6-12
UD4DC1 - Directional Coupler . . . . . 5-4.7.2
6-5.35.3
6-5.39
6-5.39.3
Table 6-12
UD4DC2 - Directional Coupler . . . . . 5-4.3.5
5-4.7.6
6-5.36.3
6-5.40
6-5.40.3
Table 6-12
UD4J11 - BNC Test Connector . . . . . 5-4.8.3.2
UD4J14 - RDA Test Panel . . . . . 5-4.3.7.2
UD4PS1 - Power Supply . . . . . 5-12.3.1.2.1
6-5.55
6-5.55.3
Figure 6-71
Table 6-12
UD4PS2 - Power Supply . . . . . 5-12.3.1.2.2
6-5.55
Figure 6-73
Table 6-12

| Subject | Paragraph Figure, Table Number |
|---|---|
| Reference Designation - Cont. | |
| UD4PS4 - Power Supply | 5-12.3.1.2.3<br>6-5.55<br>Figure 6-73<br>Table 6-12 |
| UD4PS5 - Power Supply | 5-12.3.1.2.4<br>6-5.55<br>Figure 6-73<br>Table 6-12 |
| UD4PS6 - Power Supply | 5-12.3.1.2.5<br>6-5.55<br>Figure 6-73<br>Table 6-12 |
| UD4PS7 - Power Supply | 5-12.3.1.2.6<br>6-5.55<br>Figure 6-73<br>Table 6-12 |
| UD4PS8 - Power Supply | 5-12.3.1.2.7<br>6-5.55<br>Figure 6-72<br>Table 6-12 |
| UD4PS9 - Power Supply | 5-12.3.1.2.8<br>6-5.55<br>Figure 6-73<br>Table 6-12 |
| UD4TB5 - Terminal Board | 5-12.3.1.1 |
| UD4W410 - Cable | 5-4.3.8.2.1.1 |
| UD5 - RDADP | 1-1.1<br>1-1.4<br>1-2.2.1<br>1-2.2.2.4<br>1-2.2.5<br>1-2.2.5.1<br>1-2.2.5.1.1<br>1-2.2.5.1.2<br>1-2.2.5.7<br>1-2.2.5.8<br>1-2.3<br>4-2.1.5<br>4-2.3<br>4-2.3.14<br>5-9.7<br>5-1 1.6.1 |

Subject — Paragraph Figure, Table Number

Reference Designation - Cont.
UD5 - RDADP - Cont. . . . . 5-12.3.2
5-12.3.2.1
5-12.3.2.2
5-12.4
5-13.4
6-5.41.2
6-5.46.2
6-5.47.2
6-5.48.2
6-5.49.2
6-5.50.2
6-5.56.2
6-5.57.2
6-5.58.2
6-5.59.2
6-5.60.2
6-5.60.3
6-5.61.2
6-5.62.2
6-6.21
Figure 1-3
Figure 1-9
Figure 4-2
Figure 4-3
Table 1-1
Table 1-2
Table 1-3
Table 4-48
Table 4-50
Table 4-52
Table 6-1
UD5A1 - VME Assembly . . . . . 1-2.2.5.1
4-2.3
4-2.3.7
5-12.3.2.1
5-12.4
Figure 1-9
Figure 4-10
Table 4-10
Table 6-12

Subject — Paragraph Figure, Table Number

Reference Designation - Cont.
UD5A1A1 - VCI-V Interface Board . . . . . 4-2.3
4-2.3.9
5-2.10
5-8.1
6-5.74
Figure 4-12
Figure 6-54
Table 4-12
Table 6-12
UD5A1A2 - VME Wideband Board . . . . . 4-2.3
4-2.3.8
5-13.7
6-5.73
Figure 4-11
Figure 6-53
Table 4-11
Table 6-12
UD5A1A3 - VME Wideband Board . . . . . 4-2.3
4-2.3.8
6-5.73
Figure 4-11
Figure 6-53
Table 4-11
Table 6-12
UD5A1A4 - VME Chassis . . . . . 6-5.72
UD5A1PS1 - VME Chassis Power Supply . . . . . 6-5.75
Table 6-12
UD5A2 - RDA Maintenance Panel . . . . . 1-2.2.5.1
4-2.3
4-2.3.1
4-6.4.3
5-9.3.1
5-9.3.3.5
5-10.3
5-12.4
6-4.3.2
6-5.41.2
6-5.44.3
6-5.50
6-5.50.2
6-5.50.3
6-5.56.2

| Subject | Paragraph Figure, Table Number |
|---|---|
| Reference Designation - Cont. | |
| UD5A2 - RDA Maintenance Panel - Cont. | 6-5.57.2 |
| | 6-6.27 |
| | 6-6.27.3 |
| | Figure 1-9 |
| | Figure 4-4 |
| | Figure 6-82 |
| | Table 4-3 |
| | Table 6-12 |
| | Table 6-22 |
| UD5A3 - Data Acquisition Unit (DAU) | 1-2.2.5.1 |
| | 1-2.2.5.1.1 |
| | 1-2.2.5.8 |
| | 5-9.3.3.4 |
| | 5-1 1.8.2 |
| | 6-5.41.3 |
| | Figure 1-9 |
| UD5A3A1 - DAU Digital Controller | 5-9.7.1 |
| | 5-13.2 |
| | 5-13.6 |
| | 6-5.41 |
| | Table 6-12 |
| UD5A3A2 - DAU Analog Processor Board | 5-9.3.6 |
| | 5-9.7.1 |
| | 5-13.2 |
| | 5-13.5 |
| | 5-13.6 |
| | 6-5.41 |
| | Table 6-12 |
| UD5A3A2U31 - Relay | 5-9.3.6 |
| UD5A3K2 - Relay | 5-9.3.6 |
| | 5-13.4 |
| UD5A3K3 - Relay | 5-9.3.3.4 |
| | 5-13.2 |
| UD5A3K4 - Relay | 5-9.3.6 |
| | 5-13.4 |
| UD5A3K8 - Relay | 5-9.3.3.4 |
| | 5-13.3 |
| UD5A3U31 - Relay | 5-13.4 |

| Subject | Paragraph Figure, Table Number |
|---|---|
| Reference Designation - Cont. | |
| UD5A4 - RDA Maintenance Terminal | 1-2.2.5.1 |
| | 1-2.2.5.1.1 |
| | 1-2.2.5.1.2 |
| | 4-2.3 |
| | 4-2.3.4 |
| | 4-5.4.1 1.3 |
| | 4-5.6 |
| | 4-6.4.1 |
| | 4-6.5 |
| | 5-7.1 |
| | 5-12.3.2.1 |
| | 6-5.68 |
| | Figure 1-9 |
| | Figure 4-7 |
| | Table 4-7 |
| | Table 4-48 |
| | Table 6-12 |
| UD5A5 - SCSI Assembly | 1-2.2.5.1 |
| | 4-2.3 |
| | 4-2.3.6 |
| | 5-12.3.2.1 |
| | 5-12.4 |
| | Figure 1-9 |
| | Figure 4-9 |
| | Table 4-9 |
| | Table 6-1 |
| UD5A5A1 - SCSI Tape Drive | 4-6.4.1 |
| | 4-6.4.6 |
| | 6-5.66.4 |
| | Figure 6-47 |
| | Table 6-12 |
| UD5A5A2 - SCSI Disk Drive | 6-5.66.5 |
| | Figure 6-48 |
| | Table 6-12 |
| UD5A5A4 - SCSI Enclosure Assembly | 6-5.66.3 |
| UD5A5A6 - SCSI Enclosure Assembly | Table 6-12 |
| UD5A5PS1 - SCSI Power Supply | 6-5.66.6 |
| | Table 6-12 |

Subject | Paragraph Figure, Table Number

Reference Designation - Cont.
UD5A6 - Digital Control Unit . . . . . 1-2.2.5.1.1
1-2.2.5.1.2
5-2.5.5
5-1 1.2
5-12.4
5-13.6
6-4.3.2
6-5.42.2
6-5.43.2
6-6.30
6-6.30.4.1
Figure 1-9
Table 6-1
UD5A6A1 - Analog Card . . . . . 5-1 1.2
5-1 1.7.4
6-4.3.2
6-5.42
6-5.42.3
6-5.43.3
6-6.30.3
6-6.30.4
Figure 6-84
Table 6-12
UD5A6A2 - Digital Card . . . . . 5-1 1.2
5-1 1.5.3
5-1 1.8.2
6-4.3.2
6-5.43
6-5.43.3
Table 6-12
UD5A6A3 - Notch Filter . . . . . 5-1 1.2
6-5.43.3
UD5A6PS1 - Power Supply . . . . . 6-4.3.2
6-5.44
Table 6-12
UD5A6PS2 - Power Supply . . . . . 6-4.3.2
6-5.44
Table 6-12
UD5A6PS3 - Power Supply . . . . . 6-4.3.2
6-5.44
Table 6-12

Subject | Paragraph Figure, Table Number

Reference Designation - Cont.
UD5A7 - Power Amplifier Unit . . . . . 1-2.2.5.1.1
1-2.2.5.1.2
4-2.3
4-2.3.5
4-6.5
5-2.5.5
5-1 1.3.7
5-1 1.6
5-12.4
6-5.45
6-5.45.3
6-5.46.2
6-5.46.3
6-5.47.2
6-5.47.3
6-5.48.2
6-5.48.3
6-5.49.2
6-5.49.3
6-6.30.3
Figure 1-9
Figure 4-8
Table 4-8
Table 6-1
Table 6-12
UD5A7A1 - Azimuth Power Amplifier . . . . . 5-1 1.7.7
6-5.46
6-5.46.3
Table 6-12
UD5A7A2 - Azimuth Power Amplifier . . . . . 6-5.46
6-5.46.3
Table 6-12
UD5A7A3 - HV Bus Monitor . . . . . 6-5.47
6-5.47.3
Table 6-12
UD5A7CR5 - Transient Absorber . . . . . 6-5.48
Table 6-12
UD5A7CR6 - Transient Absorber . . . . . 6-5.48
Table 6-12
UD5A7K1 - Relay . . . . . 6-5.49
6-5.49.3
Table 6-12

Subject — Paragraph Figure, Table Number

Reference Designation - Cont.
UD5A8 - SCSI Fan Assembly . . . . . 5-12.3.2.1
5-12.4
6-5.65
Table 6-12
UD5A9 - Programmable Signal Processor (PSP) . . . . . 1-2.2.5.1
1-2.2.5.6
6-5.4
6-5.4.3
Figure 1-9
Figure 6-11
Table 6-16
UD5A9A1 - Signal Processor Circuit Card . . . . . 6-5.4.1
Table 6-12
UD5A9A6 - ACU3 Card . . . . . 6-5.4.3.3
6-5.4.4
Figure 6-14
UD5A9A8 - Arithmetic Unit 1 . . . . . 5-6.5.3
UD5A9A19 - Signal Processor Circuit Card . . . . . 6-5.4.1
Table 6-12
UD5A10 - Hardwired Signal Processor (HSP) . . . . . 1-2.2.5.1
1-2.2.5.6
5-12.3.1.2.4
5-12.3.1.2.8
6-5.4
6-5.4.3
Figure 1-9
Figure 6-11
Table 6-16
UD5A10A1 - Circuit Card Assembly, Control Interface A . . . . . 5-4.4.2.1
5-5.4.5
6-5.4.1
Table 6-12
UD5A10A2 - Clutter Map Filter Output . . . . . 5-5.3.2.8
5-5.4.4.6
5-5.4.4.7
UD5A10A3 - Circuit Card Assembly, Control Interface B . . . . . 5-4.3.10
5-5.4.5
UD5A10A4 - Circuit Card Assembly, Control Interface C . . . . . 5-4.3.10
5-5.4.5.1
UD5A10A5 - Circuit Card Assembly, Control Interface C . . . . . 5-5.4.5
UD5A10A6 - Circuit Card Assembly, HSP Prescaler . . . . . 5-4.3.10.1
5-5.4.3

| Subject | Paragraph Figure, Table Number |
|---|---|
| Reference Designation - Cont. | |
| UD5A10A7 - Clutter Filter | 5-5.3.1.3 |
| | 5-5.4.4.6 |
| | 5-5.4.5 |
| | 5-5.4.5.6 |
| UD5A10A8 - Clutter Filter | 5-5.3.1.3 |
| | 5-5.4.4.6 |
| UD5A10A9 - Clutter Filter | 5-5.3.1.3 |
| UD5A10A9A5 - ACU-2 Microsequencer Card | 5-6.7.5.5 |
| UD5A10A10 - Clutter Filter | 5-5.3.1.3 |
| UD5A11 - Signal Processor Fan Assembly | 1-2.2.5.1 |
| | 5-12.3.2.1 |
| | 6-5.62 |
| | Figure 1-9 |
| | Table 6-12 |
| UD5A12 - RDASC Processor | 1-2.2.5.1 |
| | 1-2.2.5.1.1 |
| | 1-2.2.5.1.2 |
| | 4-6.4.3 |
| | 5-7.1 |
| | 5-12.3.2.1.1 |
| | 5-12.3.2.1.1.2 |
| | 5-12.3.2.1.1.6 |
| | 6-5.5 |
| | 6-5.60.2 |
| | Figure 1-9 |
| UD5A12A3 - Upper Temperature Sense Module | 5-12.3.2.1.1.6 |
| | 5-12.3.2.1.1.7 |
| | 6-5.60 |
| | 6-5.60.3 |
| | Table 5-29 |
| | Table 6-12 |
| UD5A12A4 - M3200 CPU | 5-7.4 |
| UD5A12A4 - RDASC Circuit Cards | Table 6-12 |
| UD5A12A5 - DMI Card | 5-7.6 |
| UD5A12A6 - CMM | 5-7.10.2 |
| UD5A12A11 - Archive II Controller | 5-7.7.1 |
| UD5A12A12 - ODC | 4-6.4.6 |
| | 5-7.7.1 |
| UD5A12A13 - SELCH | 4-6.4.6 |
| | 5-7.7.1 |
| UD5A12A14 - PSPI | 5-7.9 |
| UD5A12A15 - SELCH | 5-7.9 |
| | 5-7.9.2 |

Subject — Paragraph Figure, Table Number

Reference Designation - Cont.
UD5A12A18 - VCI-C Interface Board . . . . . 4-2.3
4-2.3.10
4-6.4.4
4-6.4.7
5-2.10
5-8.1
Figure 4-13
Table 4-13
UD5A12A19 - 8-line COM MUX . . . . . 4-6.4.3
5-7.8
5-9.4
5-11.3.6
5-11.8.2
5-11.8.4
UD5A12A20 - RDASC Circuit Cards . . . . . Table 6-12
UD5A12A20A1 - Time of Day (TODY) Clock . . . . . 5-7.3
5-7.3.2
5-7.3.4
Table 6-1
UD5A12A20A1BT1 - TODY Battery . . . . . Table 6-12
UD5A12A20A1BT2 - TODY Battery . . . . . Table 6-12
UD5A12A20A2 - Loader Storage Unit (LSU) Card . . . . . 4-1.3.5
5-7.3.2
5-7.3.5
UD5A12A21 - S-bus Clock Distribution Board . . . . . 5-7.3
UD5A12AT1 - S-bus Terminator Board . . . . . 5-7.3
UD5A13 - AC Fan Tray . . . . . 1-2.2.5.1
5-12.3.2.1.1.7
5-12.4
6-5.76
Figure 1-9
Table 6-12
UD5A13A1A1 - AC Fan Tray Sensor Board . . . . . 6-5.77
Figure 6-55
Table 6-12
UD5A14 - AC Power Distribution Panel . . . . . 4-2.3
4-2.3.12
6-5.59.3
6-5.59.4
6-5.67
Figure 1-9
Figure 4-15

| Subject | Paragraph Figure, Table Number |
|---|---|
| Reference Designation - Cont. | |
| UD5A14 - AC Power Distribution Panel - Cont. | Table 6-12 |
| | Table 6-22 |
| UD5A15 - CDS Patch Panel | 5-7.10.2 |
| | 5-7.10.6 |
| | 5-12.3.2.1.1.1 |
| | 6-5.61 |
| | 6-5.61.2 |
| | Figure 1-9 |
| | Table 6-12 |
| UD5A16 - I/O Panel | 1-2.2.5.1 |
| | 5-1 1.8.2 |
| | Figure 1-9 |
| UD5A16J0 - | 4-6.4.3 |
| UD5A16J1 - | 4-6.4.3 |
| UD5A16J2 - | 4-6.4.3 |
| UD5A16J4 - | 4-6.4.3 |
| UD5A16J8 - | 4-6.4.3 |
| UD5A16J9 - | 4-6.4.3 |
| UD5A17 - A/B Switch | 1-2.2.5.1 |
| | 1-2.2.5.1.1 |
| | 1-2.2.5.1.2 |
| | 1-2.2.5.5 |
| | 4-2.3 |
| | 4-2.3.17 |
| | 6-5.63 |
| | Figure 1-9 |
| | Figure 4-20 |
| | Figure 4-21 |
| | Table 4-21 |
| | Table 4-22 |
| | Table 4-48 |
| | Table 4-52 |
| | Table 6-12 |
| UD5A18 - Channel Service Unit | 1-2.2.5.1.2 |
| | 4-2.3 |
| | 4-2.3.13 |
| | 5-8.5 |
| | 5-12.3.2.1 |
| | 5-13.7 |
| | 6-5.64 |
| | Figure 1-9 |
| | Figure 4-16 |

| Subject | Paragraph Figure, Table Number |
|---|---|
| Reference Designation - Cont. | |
| UD5A18 - Channel Service Unit - Cont. | Table 1-2 |
| | Table 4-16 |
| | Table 6-12 |
| | Table 6-22 |
| UD5A19 - Wideband Communication Switch | 1-1.2 |
| | 1-2.2.5.1.2 |
| | 1-2.2.5.8 |
| | 4-2.3 |
| | 4-2.3.14 |
| | 5-2.10 |
| | 5-8.5 |
| | 5-12.3.2.1 |
| | 5-13.7 |
| | 6-5.81 |
| | Figure 4-17 |
| | Table 4-17 |
| | Table 6-12 |
| UD5A20 - STATMUX | 5-12.3.2.1 |
| UD5A21 - Standalone Dial Port Modem | 5-12.3.2.1 |
| UD5A23 - Relay Assembly | Figure 1-9 |
| UD5A24 - Relay Assembly | 1-2.2.5.1.2 |
| | 5-12.3.2.1 |
| | 5-12.4 |
| | 6-5.80 |
| | Table 6-12 |
| UD5A24K1 - Relay | 5-12.3.2.1 |
| | 5-12.4 |
| UD5A24K2 - Relay | 5-12.3.2.1 |
| | 5-12.4 |
| UD5A24TB1 - Terminal Board | 5-12.4 |
| UD5A25 - Choke Assembly | 1-2.2.5.1.1 |
| | 1-2.2.5.1.2 |
| | 5-11.7.7 |
| | Figure 1-9 |
| UD5A38 - RDA Maintenance Terminal | Table 4-52 |
| UD5B1 - Fan Assembly | 5-12.3.2.1 |
| | 5-12.4 |
| UD5B2 - Fan Assembly | 5-12.3.2.1 |
| | 5-12.4 |
| UD5B3 - Fan Assembly | 5-12.3.2.1 |
| | 5-12.4 |
| UD5B4 - Fan Assembly | 5-12.3.2.1 |
| | 5-12.4 |

| Subject | Paragraph Figure, Table Number |
|---|---|
| Reference Designation - Cont. | |
| UD5J30 - Outlet Strip | 5-12.3.2.1 |
| UD5J31 - Outlet Strip | 5-12.4 |
| UD5PS1 - Power Supply | 1-2.2.5.1 |
| | 5-12.3.2.2 |
| | 5-12.4 |
| | 6-5.56 |
| | Figure 1-9 |
| | Table 6-12 |
| UD5PS2 - Power Supply | 1-2.2.5.1 |
| | 4-2.3 |
| | 4-2.3.1 1 |
| | 5-12.3.2.2 |
| | 6-5.57 |
| | Figure 1-9 |
| | Figure 4-14 |
| | Table 4-14 |
| | Table 6-12 |
| UD5PS3 - Power Supply | 1-2.2.5.1 |
| | 4-2.3 |
| | 4-2.3.1 1 |
| | 5-12.3.2.2 |
| | 6-5.57 |
| | Figure 1-9 |
| | Figure 4-14 |
| | Table 4-14 |
| | Table 6-12 |
| UD5PS4 - Power Supply | 1-2.2.5.1 |
| | 5-12.3.2.1 |
| | 5-12.3.2.2 |
| | 6-5.58 |
| | Figure 1-9 |
| | Table 6-12 |
| UD5PS5 - Swingout Power Supply | 1-2.2.5.1 |
| | 4-2.3 |
| | 4-2.3.2 |
| | 5-12.3.2.1.1 |
| | 5-12.3.2.1.1.3 |
| | 5-12.3.2.2 |
| | 6-5.59 |
| | 6-5.59.2 |
| | 6-5.59.3 |
| | 6-5.61.3 |
| | Figure 1-9 |

Subject — Paragraph Figure, Table Number

Reference Designation - Cont.
UD5PS5 - Swingout Power Supply - Cont. . . . . Figure 4-5
Table 4-4
Table 5-29
Table 6-1
Table 6-12
Table 6-22
UD5PS5A1 - AC Power Module . . . . . 5-12.3.2.1.1.1
5-12.3.2.1.1.8
6-5.59.4
Table 5-29
Table 6-12
UD5PS5A1BT1 - AC Module 12 Volt Rechargeable Battery . . . . . 6-5.59.5
Table 6-12
UD5PS5A2 - DC Power Supply . . . . . 5-12.3.2.1.1.1
5-12.3.2.1.1.2
6-5.59.6
Table 5-29
Table 6-12
UD5PS5A3 - CDS Master Module . . . . . 4-2.3
4-2.3.3
5-7.3
5-7.10
5-7.10.2
5-12.3.2.1.1.1
5-12.3.2.1.1.5
6-5.59.7
Figure 4-6
Figure 6-43
Table 4-5
Table 4-6
Table 5-29
Table 6-12
UD5PS5A4 - Power Supply Fan Tray . . . . . 5-12.3.2.1.1.4
5-12.3.2.1.1.7
6-5.59.8
Table 5-29
Table 6-12
UD5PS5A4B1 - Power Supply Fan Tray Fan . . . . . 6-5.59.8
Table 6-12
UD5PS5A4B2 - Power Supply Fan Tray Fan . . . . . 6-5.59.8
Table 6-12
UD5TB1 - Terminal Board . . . . . 5-12.4
UD5W631 - . . . . . 4-6.4.3

Subject — Paragraph Figure, Table Number

Reference Designation - Cont.
UD5W633 - . . . . . 4-6.4.3
UD5W638 - Cable . . . . . 4-6.4.3
UD5W668 - Cable . . . . . 4-6.4.3
UD6 - Waveguide Pressurization Unit . . . . . 1-1.1
1-1.4
1-2.2.1
1-2.2.6
4-2.1.5
5-3.6.9
5-12.4
6-5.54
Figure 1-3
Figure 1-10
Table 1-1
Table 1-2
Table 1-3
Table 6-1
Table 6-12
Table 6-22
UD6FL5 . . . . . Figure 1-3
UD7 - RDA Shelter . . . . . 1-2.2.7
4-2.1.5
Table 1-1
UD7A1 - Alarm Termination Panel . . . . . Figure 1-3
Figure 1-4
Figure 1-5
UD7A2 - Main Power Distribution Panel, RDA Equipment Shelter . . . . . 5-12.2.3
5-12.2.5
5-12.2.8
5-12.4
Figure 1-3
Figure 1-4
Figure 1-5
Table 6-22
UD7A3 - Secondary Power Distribution Panel, RDA Equipment Shelter . . . . . 5-12.2.4
5-12.2.6
5-12.2.9
6-5.44.3
Figure 1-3
Figure 1-4
Figure 1-5
Table 6-22

Subject — Paragraph Figure, Table Number

Reference Designation - Cont.
UD7A4 - Vibrating Alarm Horn . . . . . Figure 1-3
Figure 1-4
Figure 1-5
UD7A5 - Fire Detection Subsystem . . . . . Figure 1-3
Figure 1-4
Figure 1-5
UD7A6 - Manual Discharge Station . . . . . Figure 1-5
UD7A6 - Transmitter Clogged Filter Sensor . . . . . Figure 1-3
Figure 1-4
UD7A7 - Manual Abort Switch . . . . . Figure 1-3
Figure 1-4
Figure 1-5
UD7A8 - Fire Detection Apparatus . . . . . Figure 1-3
Figure 1-4
UD7A9 - Damper Assembly, Motorized . . . . . Figure 1-3
Figure 1-4
Figure 1-5
UD7A10 - Damper Assembly, Motorized . . . . . Figure 1-3
Figure 1-4
Figure 1-5
UD7A11 - Surge Suppressor . . . . . 5-12.2.6
5-12.2.9
Figure 1-3
Figure 1-4
Figure 1-5
UD7A12 - Security Panel . . . . . Figure 1-3
Figure 1-4
Figure 1-5
UD7A14 - Clogged Filter Indicator . . . . . 6-6.19
6-6.19.3
Figure 1-3
Figure 1-4
Figure 1-5
Figure 6-68
UD7A15 - Clogged Filter Indicator . . . . . 6-6.19
6-6.19.3
Figure 1-4
Figure 1-5
Figure 6-68

| Subject | Paragraph Figure, Table Number |
|---|---|
| Reference Designation - Cont. | |
| UD7A16 - Clogged Filter Indicator | 6-6.19 |
| | 6-6.19.3 |
| | Figure 1-4 |
| | Figure 1-5 |
| | Figure 6-68 |
| UD7A17 - Smoke Detector, Photoelectric | Figure 1-3 |
| | Figure 1-5 |
| UD7A18 - Air Temperature Sensor, Exhaust | Figure 1-3 |
| | Figure 1-4 |
| | Figure 1-5 |
| UD7A19 - Air Temperature Sensor, Exhaust | Figure 1-3 |
| | Figure 1-4 |
| | Figure 1-5 |
| UD7A20 - Air Temperature Sensor, Interior | Figure 1-3 |
| | Figure 1-4 |
| | Figure 1-5 |
| UD7A21 - Air Temperature Sensor, Exhaust | Figure 1-3 |
| | Figure 1-5 |
| UD7A22 - Air Temperature Sensor, Exterior | Figure 1-3 |
| | Figure 1-4 |
| | Figure 1-5 |
| UD7A23 - Smoke Detector, Ionization | Figure 1-3 |
| | Figure 1-4 |
| | Figure 1-5 |
| UD7A24 - Alarm Termination Panel | Figure 1-4 |
| | Figure 1-5 |
| UD7A28 - Intercom Phone | Figure 1-3 |
| | Figure 1-4 |
| | Figure 1-5 |
| UD7A29 - Secondary Power Distribution Panel, RDA Equipment Shelter | 5-12.2.7 |
| | 5-12.2.10 |
| | 5-12.4 |
| | 6-5.44.3 |
| | Figure 1-4 |
| | Figure 1-5 |
| | Table 6-22 |
| UD7A30 - Secondary Power Distribution Panel, RDA Equipment Shelter | 5-12.2.11 |
| | 5-12.4 |
| | 6-5.44.3 |
| | Figure 1-5 |
| | Table 6-22 |
| UD7A39 - Intake Damper Assembly | Figure 1-4 |
| | Figure 1-5 |

Subject — Paragraph Figure, Table Number

Reference Designation - Cont.
UD7A40 - Exhaust Damper Assembly . . . . . Figure 1-4
Figure 1-5
UD7A44 - Clogged Filter Indicator . . . . . 6-6.19
6-6.19.3
Figure 1-5
Figure 6-68
UD7A47 - Smoke Detector, Photoelectric . . . . . Figure 1-4
Figure 1-5
UD7A48 - Air Temperature Sensor, Interior . . . . . Figure 1-4
Figure 1-5
UD7A49 - Air Temperature Sensor, Interior . . . . . Figure 1-4
Figure 1-5
UD7A50 - Air Temperature Sensor, Interior . . . . . Figure 1-4
Figure 1-5
UD7A51 - Air Temperature Sensor, Exhaust . . . . . Figure 1-4
Figure 1-5
UD7A52 - Air Temperature Sensor, Exterior . . . . . Figure 1-4
Figure 1-5
UD7A53 - Smoke Detector, Ionization . . . . . Figure 1-4
Figure 1-5
UD7A68 - Surge Suppressor . . . . . 5-12.2.7
5-12.2.10
Figure 1-4
Figure 1-5
UD7A69 - Surge Suppressor . . . . . 5-12.2.11
Figure 1-5
UD7AC1 - Air Conditioner . . . . . 6-6.19
Figure 1-3
Figure 1-4
UD7AC2 - Air Conditioner . . . . . 6-6.19
Figure 1-3
Figure 1-4
UD7DS1 - Alarm Strobe Light . . . . . Figure 1-3
Figure 1-4
Figure 1-5
UD7DS2 - Exterior Incandescent Light . . . . . Figure 1-3
Figure 1-4
Figure 1-5
UD7S1 - Contact Switch, Door Alarm . . . . . Figure 1-3
Figure 1-4
Figure 1-5

Subject — Paragraph Figure, Table Number

Reference Designation - Cont.
UD7S3 - Thermostat, Air Conditioner #1 . . . . . 6-6.19.2
Figure 1-3
Figure 1-4
Figure 1-5
Figure 6-65
UD7S4 - Thermostat, Air Conditioner #2 . . . . . 6-6.19.2
Figure 1-3
Figure 1-4
Figure 1-5
Figure 6-65
UD7S5 - Thermostat, Transmitter . . . . . Figure 1-3
Figure 1-4
Figure 1-5
UD7S6 - Contactor, RDA Equipment Shelter . . . . . 5-12.2.4
5-12.2.6
5-12.2.9
Figure 1-3
Figure 1-4
Figure 1-5
UD7S7 - Security Key Switch . . . . . Figure 1-3
Figure 1-4
Figure 1-5
UD7S35 - Thermostat, Transmitter . . . . . Figure 1-4
Figure 1-5
UD7S36 - Contactor, RDA Equipment Shelter . . . . . 5-12.2.7
5-12.2.10
Figure 1-4
Figure 1-5
UD7S37 - Contactor, RDA Equipment Shelter . . . . . 5-12.2.11
Figure 1-5
UD7TPS1 - TPS CEC Contactor . . . . . Figure 1-3
UD7TPS2 - TPS CEC Contactor . . . . . 5-12.2.8
5-12.2.9
5-12.2.10
5-12.2.11
5-12.4
Figure 1-5
UD10 - RDA Generator Shelter . . . . . 1-2.2.8
4-2.1.5
Table 1-1
Table 6-22

Subject — Paragraph Figure, Table Number

Reference Designation - Cont.
UD10A1 - Automatic Transfer Switch . . . . . 5-12.2.1
Figure 1-11
Table 6-22
UD10A1A5 - Line Voltage Monitor . . . . . 5-12.3.2.1
UD10A2 - Power Distribution Panel, Generator Shelter . . . . . 5-12.2.2
Figure 1-11
Table 6-22
UD10A3 - Damper Assembly, Exhaust . . . . . Figure 1-11
UD10A3B1 - Actuator Motor . . . . . Figure 1-11
UD10A4 - Damper Assembly, Intake . . . . . Figure 1-11
UD10A4B1 - Actuator Motor . . . . . Figure 1-11
UD10A4FL1 - Input Damper Assembly Filter . . . . . Figure 1-11
UD10A5 - Damper Assembly, Intake . . . . . Figure 1-11
UD10A5B1 - Actuator Motor . . . . . Figure 1-11
UD10A5FL1 - Input Damper Assembly Filter . . . . . Figure 1-11
UD10A6 - Fuel Tank Assembly . . . . . Figure 1-11
UD10A6MT1 - Generator Fuel Level Sensor Assembly . . . . . Figure 1-11
UD10A7 - Air Temperature Sensor, Interior . . . . . Figure 1-11
UD10A8 - Thermal Detector . . . . . Figure 1-11
UD10A9 - Alarm Termination Panel . . . . . Figure 1-11
UD10A10 - Portable Fire Extinguisher . . . . . Figure 1-11
UD10A11 - Damper Assembly. Exhaust . . . . . Figure 1-11
UD10A11B1 - Exhaust Louver Actuator . . . . . Figure 1-11
UD10A11B2 - Fan Exhaust Motor . . . . . Figure 1-11
UD10A20 - Surge Suppressor . . . . . Figure 1-11
UD10DS1 - Exterior Incandescent Light . . . . . Figure 1-11
UD10HR1 - Heater, Generator Shelter . . . . . Figure 1-11
UD10K1 - Heater Lockout Relay . . . . . Figure 1-11
UD10MG1 - Generator . . . . . Figure 1-11
UD10MG1A1 - Generator Control Panel . . . . . Figure 1-11
UD10MG1S1 - Generator Power Disconnect Switch . . . . . Figure 1-11
UD10S1 - Utility Disconnect Switch . . . . . 5-12.1
Figure 1-11
UD10S2 - Thermostat, Generator Shelter . . . . . Figure 1-11
UD10S3 - Contact Switch, Door Alarm . . . . . Figure 1-11
UD10TPS1 - TPS Fused Disconnect . . . . . 5-12.2.1
Figure 1-11

| Subject | Paragraph Figure, Table Number |
|---|---|
| Reference Designation - Cont. | |
| UD11 - Tower | 1-2.2.9 |
| | 1-2.2.10 |
| | 4-2.1.5 |
| | 6-5.53.2 |
| | Figure 1-12 |
| | Table 1-1 |
| UD11S2 - Radome Hatch Switch #1 | 5-9.3.3.4 |
| | 5-9.3.6 |
| | 5-13.2 |
| | 5-13.4 |
| UD11S102 - Radome Hatch Switch #1 | 5-9.3.3.4 |
| | 5-9.3.6 |
| | 5-13.2 |
| | 5-13.4 |
| UD12 - Radome | 1-2.2.10 |
| | Figure 1-13 |
| | Table 1-1 |
| | Table 1-2 |
| UD12A2 - Obstruction Light Relay Box | Figure 1-6 |
| UD14 - Splice Tray Assembly | 4-2.1.5 |
| UD16 - Level II Recorder | Table 6-1 |
| UD19 - MLOS Cabinet | 1-2.2.11 |
| | 4-2.1.5 |
| | 4-2.4 |

Subject — Paragraph Figure, Table Number

Reference Designation - Cont.
UD31 - Relay Box . . . . . 1-2.2.1
4-5.4.1 1.2
Figure 1-4
UD31 - Remote RDA Maintenance Terminal . . . . . 1-2.2.5.1.2
UD32 - Remote RDA Maintenance Terminal . . . . . 4-5.6
Table 4-50
UD32A1 - RDA Maintenance Terminal . . . . . 4-5.4.11.3
6-6.34
6-6.34.3
UD32A2 - Dual A/B Switch . . . . . Table 4-50
UD32A3 - Statistical Multiplexer . . . . . 6-6.34.2
UD32A4 - Dial Port Modem . . . . . Table 4-50
UD39 - MLOS Cabinet . . . . . 1-2.2.1 1
4-2.1.5
4-2.4
UD60 - TPMS Shelter . . . . . 1-2.2.12
4-2.1.5
Figure 1-14
Table 1-1
UD60A1 - TPMS Environmental Control Unit . . . . . Figure 1-14
UD60A2A1 - TPMS Fan Thermostat . . . . . Figure 1-14
UD60A2A2 - TPMS Louver Thermostat . . . . . Figure 1-14
UD60A2A3 - TPMS Exhaust Fan . . . . . Figure 1-14
UD60A2A5 - TPMS Motorized Intake Damper . . . . . Figure 1-14
UD60A2A6 - TPMS Motorized Exhaust Damper . . . . . Figure 1-14
UD60A2A7 - Vent Heat Trace . . . . . Figure 1-14
UD60A2A7A1 - Vent Heat Trace Thermostat . . . . . Figure 1-14
UD60A3 - TMPS Recirculation Fan . . . . . Figure 1-14

Subject — Paragraph Figure, Table Number

Reference Designation - Cont.
UD60A3A1 - TPMS Recirculation Fan Thermostat . . . . . Figure 1-14
UD60A3A2 - Gravity Damper . . . . . Figure 1-14
UD60A4 - TPMS Electric Toilet . . . . . 4-2.1.5
Figure 1-14
UD60A5 - TPMS Power Distribution Panel . . . . . Figure 1-14
UD60A6 - TPMS Alarm Termination Panel . . . . . Figure 1-14
UD60A6A1 - Contact Switch, TPMS Door Alarm . . . . . Figure 1-14
UD60A6A2 - Contact Switch, TPMS Door Alarm . . . . . Figure 1-14
UD60A6A3 - Contact Switch, TPMS Door Alarm . . . . . Figure 1-14
UD60A7 - Heater . . . . . 4-2.1.5
Figure 1-14
UD61 - Transition Power Source (TPS) . . . . . Figure 1-14
UD61A1 - TPS Motor Input . . . . . Figure 1-14
UD61A2 - Top Assembly . . . . . Figure 1-14
UD61A3 - TPS Generator Output Panel . . . . . Figure 1-14
UD61A4 - TPS Control Panel . . . . . Figure 1-14
UD61A5S1 - Motor Input Fused Disconnect . . . . . Figure 1-14
UD61A5S2 - Maintenance Bypass Fused Disconnect . . . . . Figure 1-14
UD61A5S3 - Generator Output Fused Disconnect . . . . . 5-12.2.3
5-12.2.8
5-12.4
Figure 1-14
UD62 - Transition Power Source (TPS) . . . . . Table 1-1
UD70 - RPG . . . . . 1-2.2.1
1-2.2.5.1.1
1-2.2.5.1.2
1-3.3
1-3.3.8
4-5.4.1 1.2
4-5.6
Figure 1-2
Table 4-21
UD71 - MSCF Workstation . . . . . Table 4-48
Table 4-50
Table 4-52
6-6.16.3

Subject — Paragraph Figure, Table Number

Reference Designation - Cont.
UD103 - Transmitter . . . . . 1-1.1
1-1.2
1-1.4
1-2.2.1
5-9.3.3.4
5-13.3
Figure 1-4
Figure 1-5
Table 1-1
Table 1-2
Table 1-3
UD103A13 - Power Distribution Panel . . . . . Table 6-22
UD104 - Receiver . . . . . 1-1.1
1-1.2
1-1.4
1-2.2.1
Figure 1-4
Table 1-1
Table 1-2
Table 1-3
UD105 - RDADP . . . . . 1-1.1
1-1.2
1-1.4
1-2.2.1
1-2.2.5.1
1-2.2.5.1.1
1-2.2.5.1.2
1-2.2.5.8
4-2.3.5
4-2.3.13
4-2.3.15
4-2.3.16
5-9.3.6
5-12.4
Figure 1-4
Table 1-1
Table 1-2
Table 1-3
Table 4-48
Table 4-50
Table 4-52
UD105A1 - RDASC Processor Wideband Port . . . . . 1-2.2.5.1.2
UD105A1A2 - Wideband Communication Card . . . . . 5-13.7

| Subject | Paragraph Figure, Table Number |
|---|---|
| Reference Designation - Cont. | |
| UD105A2 - RDA Maintenance Panel | 5-10.3<br>Figure 4-4<br>Table 4-3 |
| UD105A2U31 - Relay | 5-13.4 |
| UD105A3 - Data Acquisition Unit (DAU) | 1-2.2.5.1.1<br>5-9.3.3.4<br>5-11.8.2<br>5-13.3 |
| UD105A3A1 - DAU Digital Controller | 5-13.6 |
| UD105A3A2 - DAU Analog Processor Board | 5-13.6 |
| UD105A3A2U31 - Relay | 5-9.3.6 |
| UD105A3K2 - Relay | 5-9.3.6<br>5-13.4 |
| UD105A3K3 - Relay | 5-9.3.3.4 |
| UD105A3K5 - Relay | 5-13.2 |
| UD105A3TB2-5 | 5-9.3.3.4 |
| UD105A3TB2-11 | 5-9.3.3.4 |
| UD105A4 - RDA Maintenance Terminal | 1-2.2.5.1.1<br>1-2.2.5.1.2<br>4-5.4.11.3<br>Table 4-48 |
| UD105A9 - Programmable Signal Processor (PSP) | 1-2.2.5.6 |
| UD105A10 - Hardwired Signal Processor (HSP) | 1-2.2.5.6 |
| UD105A12 - RDASC Processor | 1-2.2.5.1.1<br>1-2.2.5.1.2 |
| UD105A12A19 - 8-line COM MUX | 5-9.4<br>5-11.8.2<br>5-11.8.4 |
| UD105A14 - AC Power Distribution Panel | 6-5.59.3 |
| UD105A16 - I/O Panel | 5-11.8.2 |
| UD105A17 - A/B Switch | 1-2.2.5.1.1<br>1-2.2.5.1.2<br>1-2.2.5.5<br>Table 4-21<br>Table 4-48<br>Table 4-52 |

| Subject | Paragraph Figure, Table Number |
|---|---|
| Reference Designation - Cont. | |
| UD105A20 - Statistical Multiplexer | 1-2.2.5.1.2 |
| | 4-2.3 |
| | 4-2.3.15 |
| | 4-5.4.1 1.3 |
| | 6-5.78 |
| | 6-6.34 |
| | 6-6.34.2 |
| | Figure 4-18 |
| | Table 4-18 |
| | Table 6-12 |
| UD105A21 - Dial Port Modem | 1-2.2.5.1.2 |
| | 4-2.3 |
| | 4-2.3.16 |
| | 4-5.4.1 1.3 |
| | 6-5.79 |
| | 6-6.35 |
| | Figure 4-19 |
| | Table 4-19 |
| | Table 6-12 |
| UD105A24 - Relay Assembly | 1-2.2.5.1.2 |
| | 6-5.80 |
| | Table 6-12 |
| UD105A38 - RDA Maintenance Terminal | Table 4-52 |
| UD105PS5 - Swingout Power Supply | 6-5.59.3 |
| | 6-5.60.3 |
| | 6-5.61.3 |
| | Table 6-22 |
| UD106 - Waveguide Pressurization Unit | 1-1.1 |
| | 1-1.2 |
| | 1-1.4 |
| | 1-2.2.1 |
| | 5-3.6.9 |
| | 6-5.54 |
| | Figure 1-4 |
| | Figure 1-5 |
| | Table 1-1 |
| | Table 1-2 |
| | Table 1-3 |
| | Table 6-12 |
| | Table 6-22 |

| Subject | Paragraph Figure, Table Number |
|---|---|
| Reference Designation - Cont. | |
| UD170 - RPG | 1-2.2.1<br>1-2.2.5.1.1<br>1-2.2.5.1.2<br>1-3.3<br>1-3.3.8<br>4-5.4.1 1.2<br>4-5.6<br>Figure 1-2<br>Table 4-21 |
| Reference Documentation | 5-1.5 |
| Reflectivity Calibration | 6-6.28.1.1 |
| Check | 6-6.28.1.2 |
| Reflectivity Calibration Check | 5-4.9.2 |
| Reflectivity Error Check | 6-6.28.2.1 |
| Reflectivity Error Estimate | 6-6.28.1.4 |
| Calculation Procedure | |
| Off-line | 6-6.28.1.4.4 |
| On-line | 6-6.28.1.4.3 |
| Data Collection Procedure | 6-6.28.1.4.2 |
| Equipment and Tools Required | 6-6.28.1.4.1 |
| Reflectivity Error Evaluation and Correction | 6-6.28.2.1.1 |
| Equipment and Tools Required | 6-6.28.2.1.2 |
| Inclement Weather Procedure | 6-6.28.2.1.5 |
| Initial Conditions/Preliminary Setup | 6-6.28.2.1.3 |
| Preferred Procedure | 6-6.28.2.1.4 |
| Related Procedures | 6-5.2.5 |

Subject — Paragraph Figure, Table Number


Relay
- DR2 Signal . . . . . 5-9.3.3.1
- DR3 Signal . . . . . 5-9.3.3.2
- DR4 Signal . . . . . 5-9.3.3.3

Relay Assembly Replacement Procedure . . . . . 6-5.80
- Equipment and Tools Required . . . . . 6-5.80.1
- Initial Conditions/Preliminary Setup . . . . . 6-5.80.2
- Replacement Procedure . . . . . 6-5.80.3

Relay Driver Logic . . . . . 5-9.3.3
- ANT CMD Relay Signal . . . . . 5-9.3.3.4
- Relay DR2 Signal . . . . . 5-9.3.3.1
- Relay DR3 Signal . . . . . 5-9.3.3.2
- Relay DR4 Signal . . . . . 5-9.3.3.3
- Status/Alarm Signal . . . . . 5-9.3.3.5

Relay Replacement Procedure . . . . . 6-5.49
- Equipment and Tools Required . . . . . 6-5.49.1
- Initial Conditions/Preliminary Setup . . . . . 6-5.49.2
- Replacement Procedure . . . . . 6-5.49.3

Relays K1 through K3 . . . . . 5-4.3.10.1

Remote Control Request Area . . . . . 4-5.2.7

Remote Power Shutdown, NWS Redundant . . . . . 5-12.4
Figure FO7-15

Removal/Installation
- Azimuth Gearbox Motor . . . . . Figure 6-40
- RDASC Circuit Card . . . . . 6-5.5.1
- Signal Processor Circuit Card . . . . . 6-5.4.1

Replacement and Setup Procedures
- 6 dB Attenuator Pad Replacement Procedures . . . . . 6-5.34
- 10 dB Attenuator Pad Replacement Procedure . . . . . 6-5.35
- 20 dB Directional Coupler Replacement Procedure . . . . . 6-5.40
- 40 dB Directional Coupler Replacement Procedure . . . . . 6-5.39
- A/B Switch Replacement Procedure . . . . . 6-5.63
- A/D Converter Replacement Procedure . . . . . 6-5.14
- AC Fan Tray Assembly . . . . . 6-5.76
- AC Fan Tray Sensor Board Replacement . . . . . 6-5.77
- AC Module 12 Volt Rechargeable Battery . . . . . 6-5.59.5
- AC Power Module . . . . . 6-5.59.4
- AGC Controller Replacement Procedure . . . . . 6-5.16
- Analog Processor Module . . . . . 6-5.41

Subject | Paragraph Figure, Table Number

Replacement and Setup Procedures - Cont.
Antenna Pedestal LRU Replacement . . . . . 6-5.52
Automatic Wideband Communication Switch . . . . . 6-5.81
Azimuth Data Package . . . . . 6-5.52.9
Azimuth Encoder . . . . . 6-5.52.9
Azimuth Gearbox . . . . . 6-5.52.10
Azimuth Gearbox Drive Motor . . . . . 6-5.52.1 1
Azimuth Manual Drive Assembly . . . . . 6-5.52.7
Azimuth Manual Drive Interlock Switch . . . . . 6-5.52.8
Azimuth Rotary Joint . . . . . 6-5.52.16
Azimuth Stow Pin Switch . . . . . 6-5.52.12
Azimuth/Elevation Power Amp Replacement Procedure . . . . . 6-5.46
Bi-Directional Crossguide Coupler Replacement Procedure . . . . . 6-5.70
CDS Master Module . . . . . 6-5.59.7
CDS Patch Panel . . . . . 6-5.61
Circulator . . . . . 6-5.52.18
Coax Delay Line Replacement Procedure . . . . . 6-5.10
Communications LRU Replacement Information . . . . . 6-5.51
CSU Replacement Procedure . . . . . 6-5.64
DAU Controller Module and Analog Processor Module Replacement Procedure . . . . . 6-5.41
DC Power Supply . . . . . 6-5.59.6
DC Power Supply Fan Tray . . . . . 6-5.59.8
DCU Analog Card Replacement Procedure . . . . . 6-5.42
DCU Digital Card Replacement Procedure . . . . . 6-5.43
DCU Power Supplies Replacement Procedure . . . . . 6-5.44
Dial Modem, Standalone . . . . . 6-5.79
Disk Drive . . . . . 6-5.66.5
Dual A/B Switch Replacement Procedure . . . . . 6-5.63
Elevation Data Package . . . . . 6-5.52.3
Elevation Encoder . . . . . 6-5.52.3
Elevation Gearbox . . . . . 6-5.52.4
Elevation Gearbox Drive Motor . . . . . 6-5.52.5
Elevation Manual Drive Assembly . . . . . 6-5.52.1
Elevation Manual Drive Stow Pin Switch . . . . . 6-5.52.2
Elevation Stow Pin Switch . . . . . 6-5.52.6
Equipment Shelter Waveguide Assembly LRU . . . . . 6-5.53.1
Fixed Attenuator Replacement Procedure . . . . . 6-5.36
Four Position RF Switch Replacement Procedure . . . . . 6-5.23
Four-way Power Divider Replacement Procedure . . . . . 6-5.21
Guard Band Filter Assy Replacement Procedure . . . . . 6-5.18
Guard Band IF Amp Assy Replacement Procedure . . . . . 6-5.17
HV Bus Monitor Replacement Procedure . . . . . 6-5.47

Subject — Paragraph Figure, Table Number

Replacement and Setup Procedures - Cont.
I/Q Phase Detector Replacement Procedure . . . . . 6-5.13
IF Amp/Limiter Replacement Procedure . . . . . 6-5.12
IF Attenuator Assy Replacement Procedure . . . . . 6-5.11
IF Log Amplifier/Detector Replacement Procedure . . . . . 6-5.31
Interference Detector Replacement Procedure . . . . . 6-5.20
Low Noise Amplifier . . . . . 6-5.52.14
Main Bearing Oil Sensor . . . . . 6-5.52.15
Maintenance Panel Assembly Replacement Procedure . . . . . 6-5.50
Matched BP Filter Assy Replacement Procedure . . . . . 6-5.9
Microwave Delay Line Replacement Procedure . . . . . 6-5.22
Mixer/Preamp Replacement Procedure . . . . . 6-5.8
Multi-Output Log Amp Detector Replacement Procedure . . . . . 6-5.15
6-5.19
Multi-Position IF Select Switch Replacement Procedure . . . . . 6-5.29
Multi-Position RF Select Switch Replacement Procedure . . . . . 6-5.28
Passive Diode Limiter . . . . . 6-5.52.19
Pedestal Slip Ring Brush Block Assembly Replacement . . . . . 6-5.69
Pedestal/Power Amplifier Unit Replacement Procedure . . . . . 6-5.45
Plug-In Frequency Unit Replacement Procedure . . . . . 6-5.38
Power Monitor Replacement Procedure . . . . . 6-5.27
Power Subsystem Enclosure . . . . . 6-5.59.3
Power Supplies Replacement Procedure . . . . . 6-5.55
6-5.56
6-5.57
6-5.58
Pre-Select BP Filter Replacement Procedure . . . . . 6-5.7
PSP/HSP Card . . . . . 6-5.4.3
RDA Group Startup and Shutdown Procedures . . . . . 6-5.3
RDA Maintenance Terminal Replacement Procedure . . . . . 6-5.68
RDA Status and Control Processor Circuit Card . . . . . 6-5.5.4
RDA Status and Control Processor Circuit Card Replacement . . . . . 6-5.5
RDADP Cabinet Power Distribution Panel Replacement Procedure . . . . . 6-5.67
Receiver Cabinet Blowers Replacement Procedure . . . . . 6-5.37
Receiver Interface Replacement Procedure . . . . . 6-5.33
Receiver Protector . . . . . 6-5.52.13
Relay Assembly . . . . . 6-5.80
Relay Replacement Procedure . . . . . 6-5.49
RF Frequency Generator Replacement Procedure . . . . . 6-5.6
RF Log Amplifier/Detector Replacement Procedure . . . . . 6-5.30
RF Noise Source Replacement Procedure . . . . . 6-5.26
RF Test Attenuator Replacement Procedure . . . . . 6-5.24

Subject — Paragraph Figure, Table Number

Replacement and Setup Procedures - Cont.
RF/IF Test Monitor Replacement Procedure . . . . . 6-5.32
SCSI Enclosure Assembly . . . . . 6-5.66.3
SCSI Fan Assembly Replacement Procedure . . . . . 6-5.65
SCSI Power Supply . . . . . 6-5.66.6
SCSI Replacement . . . . . 6-5.66
Signal Processor Blower Assembly Replacement Procedure . . . . . 6-5.62
Signal Processor Circuit Card Replacement . . . . . 6-5.4
Slip Ring . . . . . 6-5.52.17
Special Considerations for Replacement Procedures . . . . . 6-5.2
Spectrum Filter . . . . . 6-5.71
Standalone Dial Port Modem . . . . . 6-6.35
STATMUX . . . . . 6-5.78
6-6.34
Steel Tower Waveguide LRUs . . . . . 6-5.53.2
Swing-Out Power Subsystem Enclosure . . . . . 6-5.59
Tape Drive . . . . . 6-5.66.4
Temperature Sense Module . . . . . 6-5.60
TODY Battery . . . . . 6-5.5.5
Transient Absorber Replacement Procedure . . . . . 6-5.48
Two Position RF Switch Replacement Procedure . . . . . 6-5.25
VME Chassis . . . . . 6-5.72
VME Chassis Power Supply . . . . . 6-5.75
VME VCI-V Board . . . . . 6-5.74
VME Wideband Board . . . . . 6-5.73
Waveguide Component Replacement . . . . . 6-5.53.4
Waveguide Components . . . . . 6-5.53
Waveguide Pressurization Unit Replacement Procedures . . . . . 6-5.54
Waveguide Switch Replacement . . . . . 6-5.53.5
Restart . . . . . 5-14.2.19
Control RDA Function . . . . . 5-14.2.19.4
Fast Restart . . . . . 5-14.2.19.2
Control Sequence . . . . . 5-14.2.19.6
Full Restart . . . . . 5-14.2.19.1
Power Outage Occurrence . . . . . 5-14.2.19.3
Radar Data Collection . . . . . 5-14.2.19.5
Restart (REST) . . . . . 4-5.4.3
Result Bus IM . . . . . 5-6.6.8.3
Result Bus RE . . . . . 5-6.6.8.4
RF Amplification . . . . . 5-2.2.4
5-4.3.4

Subject — Paragraph Figure, Table Number


RF Digital Attenuator
- Control . . . . . Table 5-6
- Operation . . . . . Table 5-5

RF Drive . . . . . 5-4.9.1.1
- Average . . . . . 5-4.9.1.2
- CW Test Signal . . . . . 5-4.9.1.3
- Frequency Generator . . . . . 5-2.4.3.2, 5-4.4.2.3
- Path Calibration . . . . . 6-6.28.3.2
  - Equipment and Tools Required . . . . . 6-6.28.3.2.1
  - Procedure . . . . . 6-6.28.3.2.2

RF Driver Module Assembly A4 . . . . . 5-3.3.1

RF Frequency Generator Checkout . . . . . 6-6.23
- Description . . . . . 6-6.9
- Equipment and Tools Required . . . . . 6-6.23.1
- Initial Conditions/Preliminary Setup . . . . . 6-6.23.2
- Procedure . . . . . 6-6.23.3

RF Frequency Generator Replacement Procedure . . . . . 6-5.6
- Equipment and Tools Required . . . . . 6-5.6.1
- Initial Conditions/Preliminary Setup . . . . . 6-5.6.2
- Replacement Procedure . . . . . 6-5.6.3

RF GATE, Receiver Interface . . . . . 5-4.4.1.2

RF Log Amplifier - Detector . . . . . 5-4.8.2.1

RF Log Amplifier/Detector Replacement Procedure . . . . . 6-5.30
- Equipment and Tools Required . . . . . 6-5.30.1
- Initial Conditions/Preliminary Setup . . . . . 6-5.30.2
- Replacement Procedure . . . . . 6-5.30.3

RF Noise Source Replacement Procedure . . . . . 6-5.26
- Equipment and Tools Required . . . . . 6-5.26.1
- Initial Conditions/Preliminary Setup . . . . . 6-5.26.2
- Replacement Procedure . . . . . 6-5.26.3

RF Power Sensor Calibration and High Power Pulse Width Measurement . . . . . 6-6.13.3

RF Pre-Filtering . . . . . 5-4.2.1.4, 5-4.3.5

RF Pulse Generation . . . . . 5-5.4.6.4.6

RF Pulse Shaper Module Assembly A5 . . . . . 5-3.3.2

RF Switch, 4-Position . . . . . 5-4.7.4.5

RF Test Attenuator Calibration . . . . . 6-6.28.3.4
- Equipment and Tools Required . . . . . 6-6.28.3.4.1
- Procedure . . . . . 6-6.28.3.4.2

Subject — Paragraph Figure, Table Number

RF Test Attenuator Replacement Procedure . . . . . 6-5.24
Equipment and Tools Required . . . . . 6-5.24.1
Initial Conditions/Preliminary Setup . . . . . 6-5.24.2
Replacement Procedure . . . . . 6-5.24.3

RF Test Signal
Amplitude Control . . . . . 5-4.7.5
Destination Selection . . . . . 5-4.7.6
Frequency Generator . . . . . 5-4.4.2.5
5-4.7.4.1

RF Test Signal Generation . . . . . 5-2.4.5
5-4.6.3
5-4.7
Functional Flow Diagram . . . . . Figure FO5-8
Input Test Signal Switching . . . . . 5-4.7.4
Klystron Pulse Sample Scaling and Delay . . . . . 5-4.7.2
RF Test Signal Amplitude Control . . . . . 5-4.7.5
RF Test Signal Destination Selection . . . . . 5-4.7.6
Selection and Control Data Demux Function . . . . . 5-4.7.1
Wideband Noise Generation . . . . . 5-4.7.3

RF Test Signal Processing . . . . . 5-2.4.6
5-4.6.4
5-4.8
Detected Test Sample Selection and Processing . . . . . 5-4.8.3
Functional Flow Diagram . . . . . Figure FO5-9
Receiver Status Data Interface Function . . . . . 5-4.8.4
RF/IF Test Sample Detection . . . . . 5-4.8.2
RF/IF Test Sample Selection . . . . . 5-4.8.1

RF-to-IF Conversion . . . . . 5-4.2.1.5
5-4.3.6
Matched Bandpass Filter . . . . . 5-4.3.6.2
Mixer-Preamplifier . . . . . 5-4.3.6.1

RF/IF Test Monitor . . . . . 5-4.8.3.1
Location . . . . . Figure 6-81

RF/IF Test Monitor Alignment . . . . . 6-6.26
Description . . . . . 6-6.12
Equipment and Tools Required . . . . . 6-6.26.1
Initial Conditions/Preliminary Setup . . . . . 6-6.26.2
Procedure . . . . . 6-6.26.3

Subject — Paragraph Figure, Table Number

RF/IF Test Monitor Replacement Procedure . . . . . 6-5.32
Equipment and Tools Required . . . . . 6-5.32.1
Initial Conditions/Preliminary Setup . . . . . 6-5.32.2
Replacement Procedure . . . . . 6-5.32.3
RF/IF Test Sample Detection . . . . . 5-4.8.2
IF Log Amplifier-Detector . . . . . 5-4.8.2.2
Log Video Output . . . . . 5-4.8.2.3
RF Log Amplifier-Detector . . . . . 5-4.8.2.1
RF/IF Test Sample Selection . . . . . 5-4.8.1
RGTR FILE OUTPUT DATA Bus . . . . . 5-6.7.7.3
RIOS
Functionality in RDASOT . . . . . 6-6.33
Example . . . . . 6-6.33.2
Path Loss Measurement . . . . . 6-6.31.3
Table 6-40
Example . . . . . 6-6.31.3.2
Procedure . . . . . 6-6.31.3.1
RMS Interface . . . . . 5-3.5.4
RMS 8-Line COM MUX Strapping . . . . . Figure 6-31
Rotary Joint Replacement Procedure . . . . . 6-5.52.16
Equipment and Tools Required . . . . . 6-5.52.16.1
Initial Conditions/Preliminary Setup . . . . . 6-5.52.16.2
Replacement Procedures . . . . . 6-5.52.16.3
RS-232 Asynchronous Transmission . . . . . 5-9.5.4
RS-232 Communication
With DAU Interface . . . . . 5-7.8.1
With RDA Maintenance Console . . . . . 5-7.8.2
With Servo Antenna Positioning . . . . . 5-7.8.3
Running Wire List . . . . . Table 7-2

## S

S-Bus . . . . . 5-7.4.1
Terminator Board . . . . . Figure 6-23
Timing . . . . . 5-7.3.1
Safety . . . . . 6-5.2.1
Sampling Phase Calibration . . . . . 6-6.28.3.5.2
Equipment and Tools Required . . . . . 6-6.28.3.5.2.1
Procedure . . . . . 6-6.28.3.5.2.2

Subject — Paragraph Figure, Table Number

Screen Display . . . . . 4-1.4.3
Screen Format . . . . . Figure 4-22
Screen Use and Format . . . . . 4-5.2
Alarm Area . . . . . 4-5.2.2
Command Entry Line . . . . . 4-5.2.8
CRT Status Line . . . . . 4-5.2.9
Feedback Line . . . . . 4-5.2.5
Incoming Messages Area . . . . . 4-5.2.6
Menu Area . . . . . 4-5.2.3
Paging Line . . . . . 4-5.2.4
Remote Control Request Area . . . . . 4-5.2.7
Summary RDA Status Area . . . . . 4-5.2.1
SCSI Assembly Controls and Indicators . . . . . 4-2.3.6
Figure 4-9
Table 4-9
SCSI Device
Setup and Strapping . . . . . 6-5.66.1
Termination . . . . . 6-5.66.2
SCSI Disk Drive Replacement Procedure . . . . . 6-5.66.5
Equipment and Tools Required . . . . . 6-5.66.5.1
Initial Conditions/Preliminary Setup . . . . . 6-5.66.5.2
Replacement Procedure . . . . . 6-5.66.5.3
SCSI Disk Drive Strapping . . . . . Figure 6-48
SCSI Enclosure Assembly Replacement Procedure . . . . . 6-5.66.3
Equipment and Tools Required . . . . . 6-5.66.3.1
Initial Conditions/Preliminary Setup . . . . . 6-5.66.3.2
Replacement Procedure . . . . . 6-5.66.3.3
SCSI Fan Assembly Replacement Procedure . . . . . 6-5.65
Equipment and Tools Required . . . . . 6-5.65.1
Initial Conditions/Preliminary Setup . . . . . 6-5.65.2
Replacement Procedure . . . . . 6-5.65.3
SCSI Mounting Brackets . . . . . Figure 6-49
SCSI Power Supply Replacement Procedure . . . . . 6-5.66.6
Equipment and Tools Required . . . . . 6-5.66.6.1
Initial Conditions/Preliminary Setup . . . . . 6-5.66.6.2
Replacement Procedure . . . . . 6-5.66.6.3
SCSI Replacement . . . . . 6-5.66
Disk Drive Replacement Procedure . . . . . 6-5.66.5
Enclosure Assembly Replacement Procedure . . . . . 6-5.66.3

Subject | Paragraph Figure, Table Number

SCSI Replacement - Cont.
Power Supply Replacement Procedure . . . . . 6-5.66.6
SCSI Device Setup and Strapping . . . . . 6-5.66.1
SCSI Device Termination . . . . . 6-5.66.2
Tape Drive Replacement Procedure . . . . . 6-5.66.4
SCSI Tape Drive Replacement Procedure . . . . . 6-5.66.4
Equipment and Tools Required . . . . . 6-5.66.4.1
Initial Conditions/Preliminary Setup . . . . . 6-5.66.4.2
Replacement Procedure . . . . . 6-5.66.4.3
SCSI Tape Drive Strapping . . . . . Figure 6-47
SDI Control Logic . . . . . 5-6.9.8.1
Second Configuration Added to Form Menu . . . . . Figure 6-89
Secondary Alarms . . . . . 6-3.4.2.4
Secondary Fault Isolation . . . . . 6-1.4
6-3.2.7
Antenna/Pedestal Functional Group . . . . . 6-4.3
Hardwired Signal Processor Functional Group . . . . . 6-4.5
Introduction . . . . . 6-4.1
Maintenance Panel/DAU Functional Group . . . . . 6-4.8
Programmable Signal Processor Functional Group . . . . . 6-4.6
RDASC Functional Group . . . . . 6-4.7
Receiver Functional Group . . . . . 6-4.4
Transmitter Functional Group . . . . . 6-4.2
Secondary OS/32 Features . . . . . 4-1.3.3
SELCH . . . . . 5-7.7.1
5-7.9.2
Strapping . . . . . Figure 6-32
Select Individual Subtests . . . . . 4-7.2.5.3
SELECT MEM ADRS GEN AS DEST Signal . . . . . 5-6.7.7.1
Select Mode (SELM) . . . . . 4-5.4.4.2
Selected Data . . . . . 5-6.6.4.1
Selected VCP . . . . . 5-14.3.1
Selection and Control Data Demux Function . . . . . 5-4.7.1
Selection of Park Pedestal Function . . . . . 4-7.5.1.1
Selection of Position Display . . . . . 4-7.5.1.2
Self Tests . . . . . 5-1 1.2.7
Self-Test 1 . . . . . 5-1 1.9.1

Subject — Paragraph Figure, Table Number


Self-Test 2 . . . . . 5-11.9.2

Self-Test Data - Pedestal to RDA Data Processor . . . . . Table 5-27

Send/Display Messages (SENM/DISM) . . . . . 4-5.4.5

Servo Antenna Position Data Interface . . . . . 5-2.5.2

Servo Control Microprocessor . . . . . 5-2.5.1

Servo Fault Monitoring . . . . . 5-11.3.3
- Function . . . . . 5-11.6
  - Microprocessor Control . . . . . 5-11.6.2
  - Status and Error Signals . . . . . 5-11.6.1
- Functional Flow Diagram . . . . . Figure FO5-29

Servo Interface . . . . . 5-11.3.5

Servo Loop Electronics . . . . . 5-2.5.3, 5-11.3.4, 5-11.7
- AZ D/A OUT Signal . . . . . 5-11.7.2
- Command Data . . . . . 5-11.7.1
- Functional Flow Diagram . . . . . Figure FO5-27

Servo Microprocessor Control . . . . . 5-11.3.1
- Circuitry Functional Flow Diagram . . . . . Figure FO5-25

Servo Microprocessor Control Function . . . . . 5-11.4
- Microprocessor Address Information . . . . . 5-11.4.2
- Microprocessor Control Memory . . . . . 5-11.4.1

Set Interference Detector Thresholds . . . . . 6-6.25.4

Set Terminal Characteristics Menu . . . . . Figure 6-85

Setup Configuration . . . . . 4-1.4.6.1

Setup Restoration Procedures . . . . . 6-6.2

Shutdown Procedure
- RDA Group . . . . . Table 6-13

Shutdown (SHTDN) . . . . . 4-5.4.2

Signal Processing Functions . . . . . 5-4.1.1.1

Signal Processing Interface . . . . . 1-3.3.9.3

Signal Processing Program Functions vs. Subfunctions . . . . . Table 5-11

Subject | Paragraph Figure, Table Number


Signal Processor . . . . . 1-2.2.5.6
Base Data Processing Modes . . . . . 1-3.4.6
Batch Waveforms . . . . . 1-3.4.6.4
Contiguous Doppler Waveforms with Range Ambiguity Resolution . . . . . 1-3.4.6.2
Contiguous Doppler Waveforms without Range Ambiguity Resolution . . . . . 1-3.4.6.3
Contiguous Surveillance Waveforms . . . . . 1-3.4.6.1
Block Diagram . . . . . Figure 5-12
Compute Base Data . . . . . 1-3.4.1
HSP Tasks . . . . . 1-3.4.7
Performance Monitoring/Fault Localization . . . . . 1-3.4.4
Program Control . . . . . 1-3.4.5
Initialization . . . . . 1-3.4.5.2
Power Turn On . . . . . 1-3.4.5.1
Radials . . . . . 1-3.4.5.4
Start Elevation Layer . . . . . 1-3.4.5.3
PSP/HSP Layout . . . . . Figure 6-11
RDA Calibration . . . . . 1-3.4.3
RDASC Processor Interface . . . . . 1-3.4.2

Signal Processor Blower Assembly Replacement Procedure . . . . . 6-5.62
Equipment and Tools Required . . . . . 6-5.62.1
Initial Conditions/Preliminary Setup . . . . . 6-5.62.2
Replacement Procedure . . . . . 6-5.62.3

Signal Processor Circuit Card Removal and Insertion . . . . . 6-5.4.1

Signal Processor Circuit Card Replacement . . . . . 6-5.4
ACU3 Card EEPROM Burn Procedure . . . . . 6-5.4.4
PSP/HSP Card Replacement Procedure . . . . . 6-5.4.3
Signal Processor Circuit Card Removal and Insertion . . . . . 6-5.4.1
Signal Processor DIP Switch Locations and Settings . . . . . 6-5.4.2

Signal Processor DIP Switch Settings . . . . . Table 6-16

Simulated Timing and Control Signals . . . . . 5-6.9.2.3

SIP Signal . . . . . 5-6.5.1.1

Slave Circuitry, CDS . . . . . 5-7.10.4

Slip Ring Replacement Procedure . . . . . 6-5.52.17
Equipment and Tools Required . . . . . 6-5.52.17.1
Initial Conditions/Preliminary Setup . . . . . 6-5.52.17.2
Replacement Procedures . . . . . 6-5.52.17.3

SMI Bus Generator . . . . . 5-6.9.1

Subject — Paragraph Figure, Table Number

SMI Function . . . . . 5-6.3.5
PSP Diagnostic Interface . . . . . 5-6.3.5.1
RDASC-PSP Diagnostic Interface . . . . . 5-6.3.5.2
Software Aspects of Converting Video to Base Data . . . . . 5-2.8.3
Software Description
Data Processing Diagnostic Program (CPCI 07) . . . . . 1-3.6
OS/32 (CPCI 10) . . . . . 1-3.2
RDA Group Software . . . . . 1-3.1
RDA Signal Processing Software Program (CPCI 02) . . . . . 1-3.4
RDASC Software Program CPCI 01 . . . . . 1-3.3
RDASOT Software Program (CPCI 06) . . . . . 1-3.5
Software Fault Monitoring . . . . . 5-3.9.2
Software Installation Tape Loading Procedure . . . . . 4-3.4
Table 4-29
Software Reinitialization (Reboot) Procedure . . . . . 4-8.3
Software Shutdown . . . . . 6-5.2.2
Solar Calibration . . . . . 6-6.28.3.6
Equipment and Tools Required . . . . . 6-6.28.3.6.1
Procedure . . . . . 6-6.28.3.6.2
Solar Flux Correction for Site Frequency . . . . . 6-6.28.3.6.2
Table 6-28
Source File Structure . . . . . Figure 5-19
Special Considerations and Notes . . . . . 6-5.3.2.1
Special Considerations for Replacement Procedures . . . . . 6-5.2
Special Function Characters . . . . . Table 6-21
Special Keys . . . . . 4-1.3.4.3
Special Purpose Tools and Fixtures . . . . . 1-4.6
Specific Requirements . . . . . 5-14.2.16
Spectrum Filter . . . . . 5-3.6.3
6-5.71
Equipment and Tools Required . . . . . 6-5.71.1
Initial Conditions/Preliminary Setup . . . . . 6-5.71.2
Pressure . . . . . 5-10.4.5
Pressure Fault . . . . . 5-9.3.5.5
Replacement Procedure . . . . . 6-5.71.3
Spectrum Measurement . . . . . 1-3.5.2.1
Staggered Pair . . . . . 5-5.4.6.3

Subject — Paragraph Figure, Table Number


STALO, Frequency Generator . . . . . 5-4.4.2.4

Standalone Dial Port Modem Setup Procedure . . . . . 6-6.35
- Equipment and Tools Required . . . . . 6-6.35.1
- Initial Conditions/Preliminary Setup . . . . . 6-6.35.2
- Menu Listing . . . . . 6-6.35.3.4
- Modem Password Entry (locking) Procedure . . . . . 6-6.35.3.3
- Modem Password Entry (unlocking) Procedure . . . . . 6-6.35.3.1
- Procedure . . . . . 6-6.35.3
- Setup Procedure . . . . . 6-6.35.3.2

Standard Maintenance Interface . . . . . 5-6.3.5 5-6.9
- ACU Diagnostic . . . . . 5-6.9.4
- ACU Diagnostic Interface . . . . . 5-6.9.5
- AU1 Diagnostic Interface . . . . . 5-6.9.3
- Break Point Processing . . . . . 5-6.9.7
- EEPROM Microcode Storage and WCSR Download Control . . . . . 5-6.9.6
- IOC Diagnostic . . . . . 5-6.9.8
- ISC Diagnostics Interface . . . . . 5-6.9.2
- RDASC-PSP Diagnostic Interface and SMI Bus Generator . . . . . 5-6.9.1

Standard Test Equipment . . . . . 1-4.5

Standard Tools . . . . . 1-4.4

Start Elevation Layer . . . . . 1-3.4.5.3

Start Volume Scan . . . . . 5-14.3.3.1

Startup Procedure, RDA Group . . . . . Table 6-15

Startup (STUP) . . . . . 4-5.4.1

State File . . . . . 5-14.2.17.3

STATMUX, Controls and Indicators . . . . . Figure 4-18 Table 4-18

STATMUX Replacement Procedure . . . . . 6-5.78
- Equipment and Tools Required . . . . . 6-5.78.1
- Initial Conditions/Preliminary Setup . . . . . 6-5.78.2
- Replacement Procedure . . . . . 6-5.78.3

STATMUX Setup Procedure . . . . . 6-6.34
- Equipment and Tools Required . . . . . 6-6.34.1
- Initial Conditions/Preliminary Setup . . . . . 6-6.34.2
- Procedure . . . . . 6-6.34.3

Status and Control Processor Circuit Card Replacement Procedure . . . . . 6-5.5.4

Status and Error Signals . . . . . 5-1 1.6.1

Subject | Paragraph Figure, Table Number

Status and Safety Elements . . . . . 5-1 1.2.6
Status Data
Interface DAU/RDASC . . . . . 5-9.2.2
Monitoring Analog . . . . . 5-9.2.4
Monitoring Discrete . . . . . 5-9.2.3
Status Flags . . . . . 5-6.3.2.3
Status Memory Structure . . . . . Figure 5-20
Status Request Command . . . . . 5-14.2.22.1
Status Signals . . . . . 5-6.7.2.3
Status/Alarm Signal . . . . . 5-9.3.3.5
Steady State Base Data Generation . . . . . 5-6.4.4
Steel Tower . . . . . 1-2.2.9
Figure 1-12
Steel Tower Waveguide LRUs . . . . . 6-5.53.2
Stores Base and Status Data . . . . . 1-3.3.3.3
Strapping
8-Line COM MUX . . . . . Figure 6-30
FAA RMS . . . . . Figure 6-31
AC Fan Tray Sensor Board . . . . . 6-5.77.3
CDS Master Module . . . . . Figure 6-43
CMM . . . . . Figure 6-25
CONN-0/CONN-1 Layout and RACK0/TACK0 . . . . . Figure 6-19
DMI . . . . . Figure 6-26
LSU . . . . . Figure 6-29
ODC . . . . . Figure 6-34
PSPI . . . . . Figure 6-33
SCSI Disk Drive
182 MB . . . . . Figure 6-48
600 MB . . . . . Figure 6-48
SCSI Tape Drive . . . . . Figure 6-47
SELCH . . . . . Figure 6-32
Upper Temperature Sense Module and PS Fan Tray . . . . . Figure 6-44
VCI-C . . . . . Figure 6-27
Strapping and Switches . . . . . 6-5.5.2
Input/Output Chassis Backpanel Wiring . . . . . 6-5.5.2.1
Input/Output Chassis Terminators . . . . . 6-5.5.2.3
Interrupt Priority Backpanel Wiring . . . . . 6-5.5.2.2
Streaming Tape Drive . . . . . 5-7.7.3

| Subject | Paragraph Figure, Table Number |
|---|---|
| Subtest 1 - Voltage Check | 5-1 1.10.1.1 |
| Subtest 2 - Self-Test 1 | 5-1 1.10.1.2 |
| Subtest 3 - Pedestal BIT Check | 5-1 1.10.1.3 |
| Subtest 4 - Self-Test 2 | 5-1 1.10.1.4 |
| Summary RDA Status Area | 4-5.2.1<br>Table 4-40 |
| Sun Source Checks | 1-3.5.2.3<br>4-7.4.3 |
| Suncheck Measurements | 6-6.28.1.5 |
| Equipment and Tools Required | 6-6.28.1.5.1 |
| Initial Conditions/Preliminary Setup | 6-6.28.1.5.2 |
| Suncheck Subtest 2 Results | Table 6-29<br>Table 6-37 |
| Sweep in Progress | 5-5.4.6.4.5 |
| Swing-Out Power Subsystem | 4-2.3.2<br>5-12.3.2.1.1 |
| Advisory Messages | Table 4-38 |
| Controls and Indicators | Figure 4-5<br>Table 4-4 |
| Swing-Out Power Subsystem Replacement Procedures | 6-5.59 |
| AC Module 12 Volt Rechargeable Battery | 6-5.59.5 |
| AC Power Module | 6-5.59.4 |
| CDS Master Module | 6-5.59.7 |
| DC Power Supply | 6-5.59.6 |
| Equipment and Tools Required | 6-5.59.1 |
| Initial Conditions/Preliminary Setup | 6-5.59.2 |
| Power Subsystem Enclosure | 6-5.59.3 |
| Power Supply Fan Tray | 6-5.59.8 |
| Switching Redundant Channels | 4-5.4.1 1 |
| FAA Redundant Systems | |
| Locally Starting at MSCF | Table 4-48 |
| MSCF | 4-5.4.1 1.2 |
| Remotely Starting at Distant MSCF | Table 4-46 |
| NWS Redundant Systems | 4-5.4.1 1.3 |
| Locally Starting at MSCF | Table 4-52 |

| Subject | Paragraph Figure, Table Number |
|---|---|
| Switching Redundant Channels - Cont. | |
| NWS Redundant Systems - Cont. | |
| Remotely Starting at MSCF | Table 4-50 |
| Synchronization | 5-5.3.3 |
| Synchronizer | 5-5.2.3.1 |
| Functional Description | 5-5.4.6.4 |
| AU Wrap Around | 5-5.4.6.4.3 |
| Receiver Protect Command | 5-5.4.6.4.2 |
| RF Pulse Generation | 5-5.4.6.4.6 |
| Sweep in Progress | 5-5.4.6.4.5 |
| Timing and Control Signals | 5-5.4.6.4.1 |
| Transmitter Signals | 5-5.4.6.4.4 |
| Synchronous Operation | 5-7.2.1 |
| SYSCAL | 5-4.9.1.4 |
| System Clock Generation | 5-6.7.3 |
| System Console Mode Operations | |
| Miscellaneous Disk/Tape Operations | 4-3.2 |
| OS/32 Command Format and Error Messages | 4-3.5 |
| RDA Data Processor Clock Time Set Procedure | 4-3.3 |
| RDA System Test Check Procedure | 4-3.6 |
| Software Installation Tape Loading Procedure | 4-3.4 |
| System Console Special Key Sequence | 4-1.3.4 |
| System Fault Isolation Flowchart | 6-3.2.1<br>Figure 6-1 |
| System Fault Messages | Table 4-56<br>Table 5-15 |
| System Information Messages | Table 4-55<br>Table 5-14 |
| System Interface Diagrams and Interconnection Cabling Diagram | 7-1.3 |
| System Noise Calibration | 6-6.13.2 |
| System Noise Temp - Maint Required | 5-4.9.7.2 |
| System Noise Temp Degraded | 5-4.9.7.3 |

Subject | Paragraph Figure, Table Number

System Noise Temperatures . . . . . 5-4.9.7
Channel Noise Degraded . . . . . 5-4.9.7.1
ISU Performance Degraded . . . . . 5-4.9.7.4
System Noise Temp - Maint Required . . . . . 5-4.9.7.2
System Noise Temp Degraded . . . . . 5-4.9.7.3
System Port/CDS Patch Panel Path . . . . . 5-7.10.7
System Startup and Shutdown Procedures . . . . . 6-1.10
System/Applications Consoles . . . . . 6-5.3.2.1.4

## T

T/R Circulator . . . . . 5-4.2.1.1
Tach Adjustment . . . . . 6-6.30.4
AZ Tach Adjustment . . . . . 6-6.30.4.1
EL Tach Adjustment . . . . . 6-6.30.4.2
Tachometers . . . . . 5-1 1.2.4
Tape Drive Replacement Procedure . . . . . 6-5.66.4
Equipment and Tools Required . . . . . 6-5.66.4.1
Initial Conditions/Preliminary Setup . . . . . 6-5.66.4.2
Replacement Procedure . . . . . 6-5.66.4.3
Target Processor for CPCI 01 . . . . . 1-3.3.9.7
Temperature Sense Module Replacement Procedure . . . . . 6-5.60
Equipment and Tools Required . . . . . 6-5.60.1
Initial Conditions/Preliminary Setup . . . . . 6-5.60.2
Replacement Procedure . . . . . 6-5.60.3
Temperature Sensors . . . . . 5-9.7.2
Terminal Malfunction Recovery Procedure . . . . . 4-8.2
Terminal Operation . . . . . 4-1.4.4
Terminal Setup Configuration Procedure . . . . . 6-5.68.4
Termination
Forced . . . . . 4-7.2.3.2
Normal . . . . . 4-7.2.3.1
RDASOT . . . . . 4-7.2.3
Terminator
35-813M01 . . . . . Figure 6-21
35-814 . . . . . Figure 6-22
Test Bias Data . . . . . 5-5.4.7.4

Subject | Paragraph Figure, Table Number

Test Control and Subtest Options . . . . . 4-7.2.5
Test Control Menu Modification Operations . . . . . 4-7.2.6
Continue on Error . . . . . 4-7.2.6.2
Loop On Error . . . . . 4-7.2.6.3
Stop On Error . . . . . 4-7.2.6.1
Test Functions . . . . . 5-4.1.1.2
Test Generator Timing and Control . . . . . 5-5.4.7.3
Test Point Jumper Locations, ACU3 Card . . . . . Figure 6-14
TGL CMD BANK REQ Command . . . . . 5-6.8.6.3
TGL CMD BANKS FROM IOC Command . . . . . 5-6.8.6.5
Thermostats
Equipment Shelter . . . . . Figure 6-65
RDA . . . . . Figure 6-64
Time Series Data . . . . . 5-5.2.2
Time-Out Interlock Logic . . . . . 5-9.3.2
Timing and Control Signals . . . . . 5-5.4.6.4.1
Timing Diagram
Basic . . . . . Figure 5-13
Expanded . . . . . Figure 5-14
Timing Function . . . . . 5-7.3
CDS Bus Timing . . . . . 5-7.3.2
Loader Storage Unit (LSU) . . . . . 5-7.3.5
S-Bus Timing . . . . . 5-7.3.1
Time of Day (TODY) Clock . . . . . 5-7.3.4
Universal Clock (UCLK) . . . . . 5-7.3.3
Timing Signals
Batch Waveform . . . . . Figure 5-10
Contiguous Waveforms . . . . . Figure 5-9
TODY Battery Replacement Procedure . . . . . 6-5.5.5
Equipment and Tools Required . . . . . 6-5.5.5.1
Initial Conditions/Preliminary Setup . . . . . 6-5.5.5.2
TODY Clock . . . . . 5-7.3.4
Battery Location . . . . . Figure 6-28
Tools, Test Equipment and Consumables . . . . . 6-1.9

Subject — Paragraph Figure, Table Number

Tower Utilities
Discrete Monitoring Points . . . . . Table 5-25
Temperature . . . . . Table 5-26
Tower/Utility Diagnostic . . . . . 1-3.5.1.2 4-7.3.2
TPMS . . . . . 1-2.2.12
Layout . . . . . Figure 1-14
Transient Absorber Replacement Procedure . . . . . 6-5.48
Equipment and Tools Required . . . . . 6-5.48.1
Initial Conditions/Preliminary Setup . . . . . 6-5.48.2
Replacement Procedure . . . . . 6-5.48.3
Transient Fault Recovery Procedure . . . . . 6-1.1.3
Transition Power Maintenance Shelter . . . . . 1-2.2.12
Layout . . . . . Figure 1-14
Transition to New Elevation . . . . . 5-14.3.3.5
Transmit/Receive Function . . . . . 5-4.3.3
Bandpass Filtering . . . . . 5-4.3.3.1
Transmitter . . . . . 5-2.2
Cooling . . . . . 5-3.8
Diagnostics . . . . . 1-3.5.1.1 4-7.3.1
Fault Status . . . . . Table 5-23
Low Voltage Distribution . . . . . 5-3.7
Modulator . . . . . 5-2.2.3
Monitoring . . . . . 5-3.5
Overview . . . . . 5-3.2
Power Distribution . . . . . 5-3.7
Signals . . . . . 5-5.4.6.4.4
Status Alarm Description . . . . . Table 5-24
Trigger Diagram . . . . . Figure 5-11
Waveguide Pressurization Unit . . . . . 5-2.2.6
Transmitter Air Intake System . . . . . Figure 6-67
Transmitter Control . . . . . 5-3.5 5-9.3.5 5-14.2.21
Antenna . . . . . 5-14.2.21.1
Circulator Overtemp Interlock . . . . . 5-9.3.5.3
Override Radiate Inhibit Command . . . . . 5-14.2.21.2
Panel . . . . . 5-3.5.5

| Subject | Paragraph Figure, Table Number |
|---|---|
| Transmitter Control - Cont. | |
| Spectrum Filter Pressure Fault | 5-9.3.5.5 |
| WG Pressure/Humidity Alarm | 5-9.3.5.4 |
| WG SW Antenna Position Indicator | 5-9.3.5.2 |
| WG SW Transit Interlock | 5-9.3.5.1 |
| Transmitter Control and Monitoring | 5-2.2.1<br>5-3.5 |
| Control Adapter A3A4 | 5-3.5.1 |
| Control Interface A3A2 | 5-3.5.3 |
| Control Logic A3A1 | 5-3.5.2 |
| RMS Interface A3A3 | 5-3.5.4 |
| Transmitter Control Panel UD3A1 | 5-3.5.5 |
| Transmitter Fault Monitoring | 5-3.9<br>Table 5-1 |
| Hardware Fault Monitoring | 5-3.9.1 |
| Software Fault Monitoring | 5-3.9.2 |
| Transmitter Functional Block Diagram Description | Figure FO5-3 |
| Transmitter Control and Monitoring | 5-3.5 |
| Transmitter Cooling | 5-3.8 |
| Transmitter Fault Monitoring | 5-3.9 |
| Transmitter High Power Microwave Distribution | 5-3.6 |
| Transmitter Overview | 5-3.2 |
| Transmitter Power and Low Voltage Distribution | 5-3.7 |
| Transmitter Pulse Modulation | 5-3.4 |
| Transmitter RF Amplification | 5-3.3 |
| Transmitter Functional Group | 6-4.2 |
| Transmitter High Power Microwave Distribution | 5-2.2.5<br>5-3.6 |
| Circulator WG4 and WG104 | 5-3.6.2 |
| Crystal Detectors CR1/CR2 and CR101/CR102 | 5-3.6.4 |
| Harmonic Filter WG2 and WG102 | 5-3.6.1 |
| Spectrum Filter WG6 and WG106 | 5-3.6.3 |
| Waveguide Pressurization Unit UD6 and UD106 | 5-3.6.9 |
| Waveguide Switch 1S1 and 1S101 | 5-3.6.7 |
| Waveguide Switch 1S1 | 5-3.6.5 |
| Control and Switching | 5-3.6.6 |
| Waveguide Switch 1S2 | 5-3.6.8 |
| Transmitter Intake Vent Louvers Location | Figure 6-69 |
| Transmitter Power and Low Voltage Distribution | 5-2.2.2<br>5-3.7 |
| Fuse Box Assembly | 5-3.7.2 |
| Power Distribution Panel | 5-3.7.1 |

Subject | Paragraph Figure, Table Number

Transmitter Pulse Modulation . . . . . 5-3.4
208 Vdc Power Supply A2 . . . . . 5-3.4.1
Charging Switch A10 . . . . . 5-3.4.2
Charging Transformer T2 . . . . . 5-3.4.3
Modulator Pulse Assembly A12 . . . . . 5-3.4.4
Post Charge Regulator A8 . . . . . 5-3.4.5
Trigger Amplifier A11 . . . . . 5-3.4.6
Transmitter RF Amplification . . . . . 5-2.2.4
5-3.3
Filament Power Supply . . . . . 5-3.3.4
Filament Transformer . . . . . 5-3.3.7
Focus Coil Power Supply . . . . . 5-3.3.9
Klystron Tube . . . . . 5-3.3.10
Oil Tank Component Board . . . . . 5-3.3.12
Power Transformer . . . . . 5-3.3.5
Pulse Transformer . . . . . 5-3.3.6
RF Driver Module Assembly . . . . . 5-3.3.1
RF Pulse Shaper Module Assembly . . . . . 5-3.3.2
Vacuum Pump Power Supply . . . . . 5-3.3.8
Variable Attenuator . . . . . 5-3.3.3
Waveguide Arc/VSWR Detector . . . . . 5-3.3.11
Transmitter Secondary Fault Isolation Flowchart . . . . . Figure 6-5
Transmitter Startup, Special Notes . . . . . 6-5.3.2.1.5
Trigger Amplifier A11 . . . . . 5-3.4.6
Trigger Selection . . . . . Table 5-12
Two Half-Boards Assembled . . . . . Figure 6-24
Two Position RF Switch Replacement Procedure . . . . . 6-5.25
Equipment and Tools Required . . . . . 6-5.25.1
Initial Conditions/Preliminary Setup . . . . . 6-5.25.2
Replacement Procedure . . . . . 6-5.25.3
TX HV OFF . . . . . 5-9.5.1.3
TX INOP . . . . . 5-9.5.1.2
TX RECYCLE . . . . . 5-9.5.1.1

## U

UART Transmitter Control and Strobe Generation . . . . . 5-9.5.3
Unit Designation Conversion . . . . . Table 6-25
Table 6-38

Subject — Paragraph Figure, Table Number

Universal Clock (UCLK) . . . . . 5-7.3.3
Universal Communication Devices . . . . . 6-5.1.3
Upper Temperature Sense Module . . . . . 5-12.3.2.1.1.6
Figure 6-44
Use of Commercial Manuals . . . . . 6-1.8

## V

Vacuum Pump Power Supply PS8 . . . . . 5-3.3.8
Valid Commands . . . . . 5-14.2.20.4
Variable Attenuator AT1 . . . . . 5-3.3.3
VCI-C Board . . . . . 5-8.2
Figure 5-22
Controls and Indicators . . . . . Figure 4-13
Table 4-13
Strapping . . . . . Figure 6-27
VCI-V Board . . . . . 5-8.3
Figure 5-23
Controls and Indicators . . . . . Figure 4-12
Table 4-12
Strapping . . . . . Figure 6-54
VCP Maintenance . . . . . 5-14.3.2
VCP Selected . . . . . 5-14.3.1
Velocity and Width (Spectrum) Check . . . . . 5-4.9.3
Video A/D Conversion . . . . . 5-4.3.10
A/D Converter Test Signals . . . . . 5-4.3.10.3
Bias Distortion . . . . . 5-4.3.10.2
Relays K1 through K3 . . . . . 5-4.3.10.1
Video Detection
Linear Channel . . . . . 5-4.2.1.8
5-4.3.9
Log Channel . . . . . 5-4.2.1.7
5-4.3.7
Video Output Versus IF Input . . . . . Figure 6-7
Video Output Versus RF Input . . . . . Figure 6-8
Video Prescaling . . . . . 5-2.7.1
5-5.4.3
AGC Comp Factor Signals . . . . . 5-5.4.3.6

Subject — Paragraph Figure, Table Number

Video Prescaling - Cont.
AGC Compensation Factor Memory Circuits . . . . . 5-5.4.3.5
AGC Position Data . . . . . 5-5.4.3.3
AGC Selection Circuits . . . . . 5-5.4.3.4
I or Q Significant Signal . . . . . 5-5.4.3.2
Log/Linear Select Mux and CH 2 PS Output Register . . . . . 5-5.4.3.7
PS Test Select Signal . . . . . 5-5.4.3.1

Video Signal Prescaling Processing . . . . . 5-5.2.1

VME Assembly, Controls and Indicators . . . . . Figure 4-10
Table 4-10

VME Chassis . . . . . 4-2.3.7

VME Chassis Power Supply Replacement Procedure . . . . . 6-5.75
Equipment and Tools Required . . . . . 6-5.75.1
Initial Conditions/Preliminary Setup . . . . . 6-5.75.2
Replacement Procedure . . . . . 6-5.75.3

VME Chassis Replacement Procedure . . . . . 6-5.72
Equipment and Tools Required . . . . . 6-5.72.1
Initial Conditions/Preliminary Setup . . . . . 6-5.72.2
Replacement Procedure . . . . . 6-5.72.3

VME VCI-V Board Replacement Procedure . . . . . 6-5.74
Equipment and Tools Required . . . . . 6-5.74.1
Initial Conditions/Preliminary Setup . . . . . 6-5.74.2
Replacement Procedure . . . . . 6-5.74.3

VME Wideband Board . . . . . 4-2.3.8
Controls and Indicators . . . . . Figure 4-11
Table 4-11
Detailed Block Diagram . . . . . Figure 5-24
Strapping . . . . . Figure 6-53

VME Wideband Board Replacement Procedure . . . . . 6-5.73
Equipment and Tools Required . . . . . 6-5.73.1
Initial Conditions/Preliminary Setup . . . . . 6-5.73.2
Replacement Procedure . . . . . 6-5.73.3

VMEbus to Concurrent I/O Bus Interface . . . . . 5-8
Cable Bus . . . . . 5-8.4
Diagnostic Test Procedure . . . . . 4-6.4.4
VCI-C Board . . . . . 5-8.2
VCI-V Board . . . . . 5-8.3
Wideband Communications Interface . . . . . 5-8.5

| Subject | Paragraph Figure, Table Number |
|---|---|
| VMEbus to Concurrent I/O Bus Interface Board | 4-2.3.9<br>4-2.3.10<br>5-2.10 |
| Controls and Indicators | Figure 4-12<br>Figure 4-13<br>Table 4-12<br>Table 4-13 |
| Volume Coverage Control | 5-14.3 |
| Maintenance VCP | 5-14.3.2 |
| Selected VCP | 5-14.3.1 |
| Volume Scan | 5-14.3.3 |
| Volume Scan | 5-14.3.3 |
| Elevation Cut Startup | 5-14.3.3.2 |
| End of Cut | 5-14.3.3.4 |
| End of PRF Sector | 5-14.3.3.3 |
| End of Scan Period | 5-14.3.3.7 |
| New Elevation Cut | 5-14.3.3.6 |
| Start Volume Scan | 5-14.3.3.1 |
| Transition to New Elevation | 5-14.3.3.5 |


## W


| | |
|---|---|
| Warm Startup | 5-14.2.18 |
| Waveguide | |
| ARC/VSWR | 5-10.4.3 |
| Arc/VSWR Detector A6 | 5-3.3.11 |
| Component Replacement | 6-5.53.4 |
| Equipment and Tools Required | 6-5.53.4.1 |
| Initial Conditions/Preliminary Setup | 6-5.53.4.2 |
| Replacement Procedure | 6-5.53.4.3 |
| Cross Reference Index | Table 6-20 |
| Humidity/Pressure Fault | 5-10.4.6 |
| Interlock Switch | 5-13.3 |
| Waveguide Components | 6-5.53 |
| Equipment Shelter Waveguide Assembly LRU | 6-5.53.1 |
| Pedestal Waveguide LRUs | 6-5.53.3 |
| Steel Tower Waveguide LRUs | 6-5.53.2 |
| Waveguide Component Replacement | 6-5.53.4 |
| Waveguide Path Loss Measurements | 6-6.32 |
| Equipment and Tools Required | 6-6.32.1 |
| Initial Conditions/Preliminary Setup | 6-6.32.2 |

Subject — Paragraph Figure, Table Number

Waveguide Path Loss Measurements - Cont.
Measurement/Determination of TR21 . . . . . 6-6.32.3
Applicable Waveguide Pieces . . . . . 6-6.32.3.1
Calculation of TR21 . . . . . 6-6.32.3.3
Total Path Loss Measurement . . . . . 6-6.32.3.2
Measurement/Determination of TR25 . . . . . 6-6.32.4
Applicable Waveguide Pieces . . . . . 6-6.32.4.1
Calculation of TR25 . . . . . 6-6.32.4.3
Total Path Loss Measurement . . . . . 6-6.32.4.2
Measurement/Determination of TR27, TR30, and TR33 . . . . . 6-6.32.5
Applicable Waveguide Pieces . . . . . 6-6.32.5.1
Calculation of TR27 . . . . . 6-6.32.5.4
Calculation of TR30 . . . . . 6-6.32.5.5
Calculation of TR33 . . . . . 6-6.32.5.6
Examples of TR27, TR30, and TR33 Calculation . . . . . 6-6.32.5.7
Input Power Reference . . . . . 6-6.32.5.2
Output Power Measurements . . . . . 6-6.32.5.3
Waveguide Pressurization Unit . . . . . 1-2.2.6, 5-2.2.6, 5-3.6.9, Figure 1-10
Waveguide Pressurization Unit Replacement Procedure . . . . . 6-5.54
Equipment and Tools Required . . . . . 6-5.54.1
Initial Conditions/Preliminary Setup . . . . . 6-5.54.2
Replacement Procedure . . . . . 6-5.54.3
Waveguide Switch
Failure . . . . . 5-10.4.1
S1 . . . . . 5-3.6.5
Control and Switching . . . . . 5-3.6.6
S1 and S101 . . . . . 5-3.6.7
S2 . . . . . 5-3.6.8
Waveguide Switch Replacement . . . . . 6-5.53.5
Equipment and Tools Required . . . . . 6-5.53.5.1
Initial Conditions/Preliminary Setup . . . . . 6-5.53.5.2
Replacement Procedure . . . . . 6-5.53.5.3
WCSR Download Control . . . . . 5-6.9.6
WG Pressure/Humidity Alarm . . . . . 5-9.3.5.4
WG SW Antenna Position Indicator . . . . . 5-9.3.5.2
WG SW Transit Interlock . . . . . 5-9.3.5.1
WG/PFN Transfer Interlock . . . . . 5-10.4.2

Subject | Paragraph Figure, Table Number

Wideband Cabinet Assembly . . . . . 4-2.4
Wideband Communication Switch . . . . . 1-2.2.5.8
Wideband Communications Group . . . . . Figure 1-2
Wideband Communications Interface . . . . . 5-8.5
Wideband Communications Switching, NWS . . . . . 5-13.7
Wideband Data Link Interface . . . . . 1-3.3.9.4
Wideband Noise Generation . . . . . 5-4.7.3
Wideband Noise Test Signal . . . . . 5-4.7.4.2
Wiring and Backplane Continuity Check . . . . . 6-4.5.5
WR MODE and RD MODE Commands . . . . . 5-6.8.6.2
Write Function . . . . . 5-6.8.1
Write Mode . . . . . 5-6.6.8.2
Write Strobe Generation . . . . . 5-5.4.5.1

## X

XS Field . . . . . 5-6.6.4.2

## Numbers

+/- 15 Vdc Receiver Power Supply Test Adjustment Points . . . . . Figure 6-72
+/- 18 Vdc Receiver Power Supply Test Adjustment Points . . . . . Figure 6-71
2-Position Switch Operation . . . . . Table 5-7
4-Bit ALU . . . . . 5-6.7.2.1
5, 9, and 5.2 Vdc Receiver and RDADP Power Supply Test and Adjustment Points . . . . Figure 6-73
6 dB Attenuator Pad Replacement Procedure . . . . . 6-5.34
Equipment and Tools Required . . . . . 6-5.34.1
Initial Conditions/Preliminary Setup . . . . . 6-5.34.2
Replacement Procedure . . . . . 6-5.34.3
06-127 Common RS-232 Interface Off-Line Test Procedure . . . . . 4-6.4.3
06-290 PSPI Test . . . . . 4-6.3.4
4-6.4.5
06-297 IPC Diagnostics . . . . . 4-6.3.5
4-6.4.6
06-319 M3200 CPU Diagnostics . . . . . 4-6.3.6
4-6.4.7

Subject — Paragraph Figure, Table Number

06-321 M3200 Cache Diagnostics . . . . . 4-6.3.7
4-6.4.8

06-325 CMM Diagnostics . . . . . 4-6.3.8
4-6.4.9
4-6.4.10

8-Line COM MUX Strapping . . . . . Figure 6-30

10 dB Attenuator Pad Replacement Procedure . . . . . 6-5.35
Equipment and Tools Required . . . . . 6-5.35.1
Initial Conditions/Preliminary Setup . . . . . 6-5.35.2
Replacement Procedure . . . . . 6-5.35.3

20 dB Directional Coupler Replacement Procedure . . . . . 6-5.40
Equipment and Tools Required . . . . . 6-5.40.1
Initial Conditions/Preliminary Setup . . . . . 6-5.40.2
Replacement Procedure . . . . . 6-5.40.3

208 Vdc Power Supply A2 . . . . . 5-3.4.1

40 dB Directional Coupler Replacement Procedure . . . . . 6-5.39
Equipment and Tools Required . . . . . 6-5.39.1
Initial Conditions/Preliminary Setup . . . . . 6-5.39.2
Replacement Procedure . . . . . 6-5.39.3

91-539 Optical Disk System Diagnostics . . . . . 4-6.3.9

# GLOSSARY

| Acronym or Non-Standard Term | Definition |
|---|---|
| ACC | Account |
| AC | Accumulation Control |
| ACK | Acknowledge |
| ACU | Arithmetic Control Unit, Automatic Control Unit |
| AE | Add Floating Point |
| AER | Add Floating Point Register |
| AF | Accumulator Function |
| AGC | Automatic Gain Control |
| ALD | Accumulator Load |
| ALU | Arithmetic Logic Unit |
| AU | Arithmetic Unit |
| AZ | Azimuth |
| BFR | Buffered |
| BG | Background |
| BGLSETU | Load Time Set |
| BGLSTART | Start Time of Day |
| BIU | Bus Interface Unit |
| Boresight | The alignment of a directional microwave or radar antenna system through use of an optical procedure or fixed, known target. |
| BPI | Bi-Polar Interface |
| BSELCH | Buffered Selector Channel |
| CA | Computer Accelerator |
| CD | Contiguous Doppler, Carrier Detect |
| CDS | Control Diagnostic System |

| Acronym or Non-Standard Term | Definition |
|---|---|
| CE | Compare Floating Point |
| CER | Compare Floating Point Register |
| CF | Clutter Filtering |
| CFI | Clogged Filter Indicator |
| CH | Channel, Check |
| CI | Control Interface |
| CL | Current Limit |
| CM | Clutter Map |
| CMD | Command |
| CMM | Composite Memory Module |
| COHO | Coherent Oscillator |
| CONV | Conversion |
| CPCI | Computer Program Configuration Item |
| CPU | Computer Processing Unit |
| CSAR | Control Store Address Register |
| CSEL | CPU Selected |
| CSS | Command Substitution System |
| CSU | Channel Service Unit |
| CTM | Channel Terminal Manager |
| CW | Continuous Wave |
| DA | Data Available |
| DAU | Data Acquisition Unit |
| dB | Decibels |
| DCB | Device Control Block |
| DD | Divide Floating Point |
| DDR | Divide Register Floating Point |

| Acronym or Non-Standard Term | Definition |
|---|---|
| DE | Divide Floating Point |
| Dealiase | The action or process of restoring the correct frequency information (which represents wind velocity) to a digital signal which may have become distorted during the conversion from an analog signal. |
| DED | Dedicated |
| DER | Divide Floating Point Register |
| DEV | Device |
| DFU | Digital Floating Point Unit |
| DIO | Digital Input/Output |
| DIP | Dual In Line Package |
| DMA | Direct Memory Access |
| DMI | Direct Memory Interface |
| DR | Data Request |
| DROM | Decoder Read Only Memory |
| DVM | Digital Voltmeter |
| EC | Extendable Contiguous |
| Echoplex | Echos Back to Character |
| ECW | Emulation Control Word |
| ED | Edge Detect |
| EDMA | Extended Direct Memory Access |
| EDT | Edit |
| EHB | Engineering Handbook |
| EMAR | EDMA Memory Access Register |
| EMDR | EDMA Memory Data Register |
| ENLC | Enable Local Control |
| ENRC | Enable Remote Control |

| Acronym or Non-Standard Term | Definition |
|---|---|
| EOT | End of Test |
| EPF | Early Power Failure |
| EPX | Echoplex |
| ESD | Electrostatic Sensitive Device |
| FBD | Functional Block Diagram |
| FC | Center Frequency |
| FCO | File Control |
| FCS | Flag Register |
| FDX | Full Duplex |
| FFD | Functional Flow Diagram |
| FIL | Filament |
| FL | Fault Isolation |
| FLR | Float Register, Flag Register |
| FLT | Fault |
| FO | Fiber Optic |
| FORMT | Format |
| FPP | Floating Point Processing |
| FT | Feed Through, Fixed Threshold |
| FXR | Fix Register |
| Halfword | An unbroken sequence of bits or characters that make up half a computer word and that can be addressed as a unit. |
| HDX | Half Duplex |
| HLD | Hold |
| HP | High Power |
| Handshaking | A process in which predetermined arrangements of characters are exchanged by the receiving and transmitting equipment to establish synchronization. |

| Acronym or Non-Standard Term | Definition |
|---|---|
| HSP | Hardwired Signal Processor |
| HVAC | Heat, Ventilation, and Air Conditioning |
| HWSP | Hardwired Signal Processor |
| IOC | Input/Output Controller |
| IPC | Intelligent Peripheral Controller |
| IPL | Initial Program Load |
| ISC | Input Signal Condition |
| ISSD | Input Signal Selection and Distribution |
| ISU | Interference Suppression Unit |
| LCDR | Load Complement Register Floating Point |
| LCER | Load Complement Floating Point Register |
| LCM | Line Conditioner Module |
| LD | Load Floating Point |
| LDE | Load Double Precision From Single Precision Floating Point |
| LDGR | Load Floating Point From General Register |
| LE | Load Floating Point |
| LED | Light Emitting Diode |
| LEDR | Load Register Single Precision From Double Precision Floating Point |
| LEGR | Load Floating Point From General Register |
| LFC | Line Frequency Derived Clock |
| LGDR | Load General Register From Loading Point Register |
| LGER | Load Floating Point From General Register |
| LIN | Linear |
| LMA | Local Memory Address |
| LMB | Local Memory Bus |

| Acronym or Non-Standard Term | Definition |
|---|---|
| LMD | Load Floating Point Multiple (Double Precision Instruction) |
| LME | Load Floating Point Multiple (Single Precision Instruction) |
| LNA | Low Noise Amplifier |
| LOC | Location Counter |
| LPDR | Load Positive Register Floating Point |
| LPER | Load Positive Floating Point Register |
| LPS | Load Process Segment |
| LR | Link Register |
| LRU | Line Replaceable Unit |
| LSB | Least Significant Bit |
| LSU | Loader Storage Unit |
| LT | Leakage Threshold |
| LVPS | Low Voltage Power Supply |
| MAC | Multiplier/Accumulator Calculation |
| MAT | Memory Address Translator |
| MBZ | EMAM Busy |
| MC | Memory Control |
| MD | Multiply Floating Point |
| MDR | Memory Data Register |
| MDR | Multiply Register Floating Point (Double Precision Instruction) |
| MDS | Memory Data System |
| ME | Multiply Floating Point |
| MER | Multiply Register Floating Point (Single Precision Instruction) |
| MLD | Multiplier Load Control Code |
| MLOS | Microwave Line of Sight |

| Acronym or Non-Standard Term | Definition |
|---|---|
| MMAND | Maintenance Mandatory |
| MMI | Man-Machine Interface |
| MPE | Micro-Interrupt Priority Encoder |
| MR | Master Reset |
| MSB | Most Significant Bit |
| MSG | Master Signal Generator |
| MUX | Multiplexer |
| NEXRAD | Next Generation Weather Radar |
| NOP | No Operation |
| NWS | National Weather Service |
| NWSF | Notch Width Scale Factor |
| OC | Overcurrent |
| ODC | Optical Disk Controller |
| ODG | Overlay Descripter Table |
| OED | Overhead Encoder/Decoder |
| OMT | Othogonal Mode Transducer |
| ORX | Optical Receiver |
| OT | Overtemperature |
| OTX | Optical Transmitter |
| OV | Overvoltage |
| PALS | Programmable Asynchronous Line System |
| PASLA | Programmable Asynchronous Single Line Adapter |
| PCU | Pedestal Control Unit |
| PDCU | Pedestal Digital Control Unit |
| PDD | Power Distribution Diagram |
| PDP | Power Distribution Panel |

| Acronym or Non-Standard Term | Definition |
|---|---|
| PED | Pedestal |
| PFN | Pulse Forming Network |
| PIA | Peripheral Interface Adapter |
| PIC | Precision Interval Clock |
| PIE | Priority Interrupt Encoder |
| PIQ | Processor Interrupt Queue |
| PIQE | PIQ Not Empty |
| PLL | Phase Lock Loop |
| PLS | Pulse |
| PM | Performance Monitoring |
| PMUX | Private MUX |
| PPAU | Pedestal Power Amplifier Unit |
| PPF | Primary Power Failure |
| PRF | Pulse Repetition Frequency |
| PROM | Programmable Read Only Memory |
| PRT | Pulse Repetition Time |
| PSD | Power Spectrum Density |
| PSIP | Programmed Sweep In Progress |
| PSTE | Process Segment Table Entries |
| PSPI | Programmable Signal Processor Interface |
| PSW | Program Status Word |
| PUES | Principal User External System |
| PWA | Printed Wire Assembly |
| QSA | Quad Synchronous Adapter |
| RALU | Register Arithmetic Logic Unit |
| RAM | Random Access Memory |

| Acronym or Non-Standard Term | Definition |
|---|---|
| RCC | Read Condition Code |
| RCVR | Receiver |
| RD | Receiver Data |
| RDA | Radar Data Acquisition |
| RDADP | Radar Data Acquisition Data Processor |
| RDASC | Radar Data Acquisition Status and Control |
| RDASOT | Radar Data Acquisition System Operational Test |
| RDR | ROM Data Register |
| RELC | Request Local Control |
| REX | Register External |
| RF | Radio Frequency |
| RGTR | Register |
| RH | Right Hand |
| RIOS | Receiver Interface Output Select |
| RMS | Root Mean Square |
| ROM | Read Only Memory |
| RPG | Radar Product Generation |
| RPIE | Real Property Installed Equipment |
| RRC | Request Remote Control |
| RSP | Response, Receiver/Signal Processor |
| RST | Remote Self-Test |
| RTC | Real Time Clock |
| RX | Receiver |
| SAE | Society of Automotive Engineers |
| SCIM | Standard Cubic Inches/Minutes |
| SCSI | Small Computer System Interface |

| Acronym or Non-Standard Term | Definition |
|---|---|
| SDE | Segment Descriptor Entry |
| SDI | Serial Data In |
| SDR | Subtract Register (Double Precision Register) |
| SE | Subtract Floating Point |
| segname | Segment Name |
| segtype | Segment Type |
| SELCH | Select Channel |
| SER | Subtract Floating Point Register (Single Precision Instruction) |
| SMI | Serial Maintenance Interface |
| SOPS | Swing-Out Power Subsystem |
| SOT | System Operability Testing |
| SP | Signal Processor |
| SPS | Signal Processor Subsystem |
| SRA | Site Repairable Assemblies |
| SSTE | Shared Segment Table Entries |
| STALO | Stable Local Oscillator |
| STD | Store Floating Point (Double Precision Instruction) |
| STDE | Store Double Precision In Single Precision Floating Point (Mixed Mode) |
| STE | Segment Table Entry, Store Floating Point (Single) |
| STMD | Store Floating Point Multiple (Double) |
| STME | Store Floating Point Multiple (Single) |
| SVC | Supervisor Call |
| SW | Spectrum Width |
| SWP | Severe Weather Probability |
| SYNC | Synchronous |

| Acronym or Non-Standard Term | Definition |
|---|---|
| SYSGEN | System Generator |
| SYSID | System Identification |
| TACH | Tachometer |
| TASKID | Task Identification |
| TCB | Task Control Board |
| TCB | Toggle Command Banks |
| TCC | Clear Real Time Clock |
| TCCR | Clear Command Bank Toggle Request |
| TCIR | Clear Toggle Input Bank Request |
| TCM | Enter Coefficient RAM Mode |
| TCOR | Clear Output Bank Toggle Request |
| TCR | Clear Run Flip-Flop |
| TD | Transmitter Data |
| TDCA | Decrement Coefficient Memory Address |
| TICA | Increment Coefficient Memory Address |
| TIMA | Increment Macro Address |
| TOB | Toggle Output Banks |
| TODY | Time of Day |
| TSM | Enter Sine/Cosine Mode |
| TSR | Set Run Flip Flop |
| TX | Transmitter |
| UART | Universal Asynchronous Receiver/Transmitter |
| UCLK | Universal Clock |
| UCP | Unit Control Position |
| UD | Unit Designation |
| VA | Voltage Adjustment |

| Acronym or Non-Standard Term | Definition |
|---|---|
| VCI | VMEbus to Concurrent I/O Bus Interface |
| VCP | Volume Coverage Pattern |
| VDT | Video Display Terminal |
| VDU | Video Display Unit |
| VIC | VME Interface Chip |
| VME | Versa Module Eurocard |
| VMEbus | Versa Module Eurocard Bus |
| VSWR | Voltage Standing Wave Ratio |
| WB | Wideband |
| WBC | Wideband Communications |
| WCS | Writable Control Storage |
| WCSR | Write Control Store RAM |
| WG | Waveguide |
| WLDT | Write Log Data To Tape |
| WR | Write |
| WSR | Weather Surveillance Radar |
| XMTR | Transmitter |
| XSTF | Store Fullword |
| ZBID | Zero-Bit Insert/Delete |